AUTHENTICATED
U.S. GOVERNMENT
INFORMATION
GPO

Federal Register

7–12–02 Friday
Vol. 67 No. 134 July 12, 2002
Pages 46093–46368

The **FEDERAL REGISTER** is published daily, Monday through Friday, except official holidays, by the Office of the Federal Register, National Archives and Records Administration, Washington, DC 20408, under the Federal Register Act (44 U.S.C. Ch. 15) and the regulations of the Administrative Committee of the Federal Register (1 CFR Ch. I). The Superintendent of Documents, U.S. Government Printing Office, Washington, DC 20402 is the exclusive distributor of the official edition.

The **Federal Register** provides a uniform system for making available to the public regulations and legal notices issued by Federal agencies. These include Presidential proclamations and Executive Orders, Federal agency documents having general applicability and legal effect, documents required to be published by act of Congress, and other Federal agency documents of public interest.

Documents are on file for public inspection in the Office of the Federal Register the day before they are published, unless the issuing agency requests earlier filing. For a list of documents currently on file for public inspection, see http://www.nara.gov/fedreg.

The seal of the National Archives and Records Administration authenticates the Federal Register as the official serial publication established under the Federal Register Act. Under 44 U.S.C. 1507, the contents of the **Federal Register** shall be judicially noticed.

The **Federal Register** is published in paper and on 24x microfiche. It is also available online at no charge as one of the databases on GPO Access, a service of the U.S. Government Printing Office.

The online edition of the **Federal Register** is issued under the authority of the Administrative Committee of the Federal Register as the official legal equivalent of the paper and microfiche editions (44 U.S.C. 4101 and 1 CFR 5.10). It is updated by 6 a.m. each day the **Federal Register** is published and it includes both text and graphics from Volume 59, Number 1 (January 2, 1994) forward.

GPO Access users can choose to retrieve online **Federal Register** documents as TEXT (ASCII text, graphics omitted), PDF (Adobe Portable Document Format, including full text and all graphics), or SUMMARY (abbreviated text) files. Users should carefully check retrieved material to ensure that documents were properly downloaded.

On the World Wide Web, connect to the **Federal Register** at http://www.access.gpo.gov/nara. Those without World Wide Web access can also connect with a local WAIS client, by Telnet to swais.access.gpo.gov, or by dialing (202) 512–1661 with a computer and modem. When using Telnet or modem, type swais, then log in as guest with no password.

For more information about GPO Access, contact the GPO Access User Support Team by E-mail at gpoaccess@gpo.gov; by fax at (202) 512–1262; or call (202) 512–1530 or 1–888–293–6498 (toll free) between 7 a.m. and 5 p.m. Eastern time, Monday–Friday, except Federal holidays.

The annual subscription price for the **Federal Register** paper edition is $699, or $764 for a combined **Federal Register, Federal Register** Index and List of CFR Sections Affected (LSA) subscription; the microfiche edition of the **Federal Register** including the **Federal Register** Index and LSA is $264. Six month subscriptions are available for one-half the annual rate. The charge for individual copies in paper form is $10.00 for each issue, or $10.00 for each group of pages as actually bound; or $2.00 for each issue in microfiche form. All prices include regular domestic postage and handling. International customers please add 25% for foreign handling. Remit check or money order, made payable to the Superintendent of Documents, or charge to your GPO Deposit Account, VISA, MasterCard or Discover. Mail to: New Orders, Superintendent of Documents, P.O. Box 371954, Pittsburgh, PA 15250–7954.

There are no restrictions on the republication of material appearing in the **Federal Register.**

How To Cite This Publication: Use the volume number and the page number. Example: 67 FR 12345.

Printed on recycled paper.

SUBSCRIPTIONS AND COPIES

PUBLIC

Subscriptions:

Paper or fiche	**202–512–1800**
Assistance with public subscriptions	**202–512–1806**

General online information **202–512–1530; 1–888–293–6498**

Single copies/back copies:

Paper or fiche	**202–512–1800**
Assistance with public single copies	**1–866–512–1800 (Toll-Free)**

FEDERAL AGENCIES

Subscriptions:

Paper or fiche	**202–523–5243**
Assistance with Federal agency subscriptions	**202–523–5243**

What's NEW!

Federal Register Table of Contents via e-mail

Subscribe to FEDREGTOC, to receive the **Federal Register** Table of Contents in your e-mail every day.

If you get the HTML version, you can click directly to any document in the issue.

To subscribe, go to **http://listserv.access.gpo.gov** and select:

Online mailing list archives
FEDREGTOC-L
Join or leave the list

Then follow the instructions.

FEDERAL REGISTER WORKSHOP

THE FEDERAL REGISTER: WHAT IT IS AND HOW TO USE IT

FOR: Any person who uses the **Federal Register** and Code of Federal Regulations.

WHO: Sponsored by the Office of the Federal Register.

WHAT: Free public briefings (approximately 3 hours) to present:

1. The regulatory process, with a focus on the Federal Register system and the public's role in the development of regulations.
2. The relationship between the **Federal Register** and Code of Federal Regulations.
3. The important elements of typical **Federal Register** documents.
4. An introduction to the finding aids of the FR/CFR system.

WHY: To provide the public with access to information necessary to research Federal agency regulations which directly affect them. There will be no discussion of specific agency regulations.

WASHINGTON, DC

WHEN: July 23, 2002—9:00 a.m. to noon

WHERE: Office of the Federal Register
Conference Room
800 North Capitol Street, NW.
Washington, DC
(3 blocks north of Union Station Metro)

RESERVATIONS: 202–523–4538; or
info@fedreg.nara.gov

Contents

Federal Register

Vol. 67, No. 134

Friday, July 12, 2002

Agriculture Department
See Farm Service Agency
See Federal Crop Insurance Corporation
See Food and Nutrition Service
See Forest Service
See National Agricultural Library
See National Agricultural Statistics Service
See Natural Resources Conservation Service

Arctic Research Commission
NOTICES
Meetings, 46168–46169

Blind or Severely Disabled, Committee for Purchase From People Who Are
See Committee for Purchase From People Who Are Blind or Severely Disabled

Broadcasting Board of Governors
NOTICES
Meetings; Sunshine Act, 46171

Centers for Disease Control and Prevention
NOTICES
Grants and cooperative agreements; availability, etc.:
Clinical Immunization Safety Assessment Centers Program, 46193
Reports and guidance documents; availability, etc.:
Public Health Security and Bioterrorism Preparedness and Response Act; notification of possession of select agents; preliminary guidance, 46363–46366

Children and Families Administration
See Community Services Office
NOTICES
Agency information collection activities:
Submission for OMB review; comment request, 46193–46194

Civil Rights Commission
NOTICES
Meetings; Sunshine Act, 46171

Coast Guard
NOTICES
Meetings:
Great Lakes Pilotage Advisory Committee, 46239–46240

Commerce Department
See International Trade Administration
See National Oceanic and Atmospheric Administration

Committee for Purchase From People Who Are Blind or Severely Disabled
NOTICES
Procurement list; additions and deletions, 46169–46171

Community Services Office
NOTICES
Grants and cooperative agreements; availability, etc.:
Assets for Independence Demonstration Program, 46194
Training, Technical Assistance, and Capacity-Building Program, 46339–46362

Comptroller of the Currency
NOTICES
Agency information collection activities:
Proposed collection; comment request, 46250–46254

Defense Department
RULES
Acquisition regulations:
Individual Contracting Action Report; reporting requirements, 46112–46123
Ocean transportation by U.S.-flag vessels
Correction, 46123
NOTICES
Agency information collection activities:
Proposed collection; comment request, 46180–46181
Federal Acquisition Regulation (FAR):
Agency information collection activities—
Submission for OMB review; comment request, 46181–46183
Meetings:
Proprietary data; treatment during DoD procurements, 46183

Education Department
NOTICES
Agency information collection activities:
Submission for OMB review; comment request, 46183–46184
Grants and cooperative agreements; availability, etc.:
Elementary and secondary education—
Voluntary Public School Choice Program; correction, 46255

Employment and Training Administration
NOTICES
Agency information collection activities:
Proposed collection; comment request, 46214

Employment Standards Administration
NOTICES
Minimum wages for Federal and federally-assisted construction; general wage determination decisions, 46215–46216

Environmental Protection Agency
RULES
Air pollutants, hazardous; national emission standards:
Generic Maximum Achievable Control Technology—
Cyanide chemicals, carbon black, ethylene, and spandex, 46257–46289
Spandex production, 46288–46293
PROPOSED RULES
Air pollutants, hazardous; national emission standards:
Generic Maximum Achievable Control Technology—
Spandex production; correction, 46293–46295
Hazardous waste:
Identification and listing—
Exclusions, 46139–46148
NOTICES
Environmental statements; availability, etc.:
Agency statements—
Comment availability, 46185–46186

Weekly receipts, 46184–46185
Reports and guidance documents; availability, etc.:
Clean Water Act—
Wastewater security; operator training grants; funds allocation; memorandum, 46186
Youth and Environment Training and Employment Program; funds allocation; memorandum, 46186

Executive Office of the President
See Management and Budget Office
See Trade Representative, Office of United States

Farm Service Agency
NOTICES
Agency information collection activities:
Proposed collection; comment request, 46164

Federal Aviation Administration
RULES
Airworthiness directives:
Boeing, 46098–46100
Glaser-Dirks Flugzeugbau GmbH, 46100–46102
McDonnell Douglas, 46096–46098
Standard instrument approach procedures, 46102–46104
PROPOSED RULES
Airworthiness directives:
Boeing, 46132–46134
SOCATA-Groupe AEROSPATIALE, 46130–46132
NOTICES
Aeronautical land-use assurance; waivers:
George M. Bryan Field Airport, MS, 46240
Technical standard orders:
Aircraft seats and berths, 46240–46241

Federal Communications Commission
RULES
Organization, functions, and authority delegations:
Media Relations Office, 46112
Practice and procedure:
Regulatory fees (2002 FY); assessment and collection, 46297–46325
PROPOSED RULES
Digital television stations; table of assignments:
West Virginia, 46148–46149
NOTICES
Reports and guidance documents; availability, etc.:
Video programming delivery; market competition status; annual assessment, 46187–46190

Federal Crop Insurance Corporation
RULES
Crop insurance regulations:
Sugarcane, 46093–46096

Federal Deposit Insurance Corporation
NOTICES
Agency information collection activities:
Proposed collection; comment request, 46250–46254

Federal Emergency Management Agency
NOTICES
Agency information collection activities:
Proposed collection; comment request, 46190–46191
Disaster and emergency areas:
Arizona, 46191
Texas, 46192

Federal Highway Administration
NOTICES
Environmental statements; notice of intent:
Dubuque County, IA, 46241
Jefferson and Park Counties, CO, 46241–46242

Federal Railroad Administration
NOTICES
Exemption petitions, etc.:
Gadsden Switching Service, Inc., 46242
Gulf & Ohio Railways, 46242–46243
Port Authority Trans-Hudson Corp., 46243
Traffic control systems; discontinuance or modification:
CSX Transportation, Inc., 46243–46244
Union Pacific Railroad Co., 46244–46245

Federal Reserve System
NOTICES
Agency information collection activities:
Proposed collection; comment request, 46250–46254
Federal Open Market Committee:
Domestic policy directives, 46192

Food and Drug Administration
NOTICES
Committees; establishment, renewal, termination, etc.:
Public advisory committees; voting members, 46194–46195
Meetings:
Evidence based assisted reproductive technologies; workshop, 46196
Pediatric oncology drug development; workshop, 46196–46197

Food and Nutrition Service
NOTICES
Food distribution programs:
Donated food national average minimum value (July 1, 2002 to June 30, 2003), 46164–46165

Forest Service
NOTICES
Environmental statements; notice of intent:
Black Hills National Forest, SD, 46165–46166
Meetings:
Resource Advisory Committees—
Glenn/Colusa County, 46166–46167
Lake County, 46167

General Services Administration
NOTICES
Acquisition regulations:
State Department Immigrant Visa and Alien Registration Application (OF 230, Part 1); form cancellation, 46193
Environmental statements; notice of intent:
San Diego County, CA; INS Border Patrol Station/Administration Building construction, 46193
Federal Acquisition Regulation (FAR):
Agency information collection activities—
Submission for OMB review; comment request, 46181–46183

Health and Human Services Department
See Centers for Disease Control and Prevention
See Children and Families Administration
See Community Services Office
See Food and Drug Administration

Housing and Urban Development Department
NOTICES
Agency information collection activities:
Proposed collection; comment request, 46197–46202
Grants and cooperative agreements; availability, etc.:
Facilities to assist homeless—
Excess and surplus Federal property, 46202
Federal Public Housing Program—
New York, 46335–46337

Immigration and Naturalization Service
NOTICES
Meetings:
Canada; safe third country agreement, 46212–46213

Indian Affairs Bureau
NOTICES
Indian entities recognized as eligible to receive services from BIA; list, 46327–46333
Indian tribes, acknowledgment of existence determinations, etc.:
Chinook Indian Tribe/Chinook Nation, 46204–46206
Tribal-State Compacts approval; Class III (casino) gambling:
Puyallup Tribe of Indians, WA, 46367–46368

Interior Department
See Indian Affairs Bureau
See Land Management Bureau
See Minerals Management Service
See National Indian Gaming Commission
NOTICES
Privacy Act:
Systems of records, 46202–46203

International Trade Administration
NOTICES
Antidumping:
Preserved mushrooms from—
China, 46173–46176
India, 46172–46173
Tapered roller bearings and parts, finished and unfinished, from—
China, 46176–46177

Justice Department
See Immigration and Naturalization Service
See Parole Commission
See Prisons Bureau

Labor Department
See Employment and Training Administration
See Employment Standards Administration

Land Management Bureau
NOTICES
Environmental statements; notice of intent:
Glamis Marigold Mining Co., NV; Millennium project plan, 46206–46207
Meetings:
Resource Advisory Councils—
Alaska, 46203–46204
Arizona, 46207
Resource management plans, etc.:
Alabama and Mississippi; coal information and invitation to participate in identification of issues and planning criteria, 46207–46209

Management and Budget Office
NOTICES
Designated Federal Entities and Federal Entities; list, 46218–46220

Maritime Administration
NOTICES
Coastwise trade laws; administrative waivers:
DEEP SCAN, 46245–46246
LIEBESTRAUM, 46246
THORR, 46246–46247

Minerals Management Service
NOTICES
Agency information collection activities:
Submission for OMB review; comment request, 46209–46212

National Aeronautics and Space Administration
NOTICES
Federal Acquisition Regulation (FAR):
Agency information collection activities—
Submission for OMB review; comment request, 46181–46183
Meetings:
Advisory Council
Space Science Advisory Committee, 46216–46217

National Agricultural Library
NOTICES
Agency information collection activities:
Proposed collection; comment request, 46167

National Agricultural Statistics Service
NOTICES
Agency information collection activities:
Proposed collection; comment request, 46167–46168

National Highway Traffic Safety Administration
PROPOSED RULES
Motor vehicle safety standards:
Low-speed vehicles, 46149–46163

National Indian Gaming Commission
RULES
Indian Gaming Regulatory Act:
Environment, public health, and safety; interpretation, 46109–46112
PROPOSED RULES
Indian Gaming Regulatory Act:
Classification of games; withdrawn, 46134–46136

National Oceanic and Atmospheric Administration
NOTICES
Meetings:
Gulf of Mexico Fishery Management Council, 46177
Mid-Atlantic Fishery Management Council, 46178
Pacific Fishery Management Council, 46178
Permits:
Endangered and threatened species, 46178–46179
Marine mammals, 46179–46180

Natural Resources Conservation Service
NOTICES
Environmental statements; availability, etc.:
Swan Quarter Watershed Project, NC, 46168

Nuclear Regulatory Commission
NOTICES
Agency information collection activities:
Submission for OMB review; comment request, 46217
Environmental statements; availability, etc.:
Exelon Generation Co., LLC, 46218

Office of Management and Budget
See Management and Budget Office

Office of United States Trade Representative
See Trade Representative, Office of United States

Parole Commission
NOTICES
Meetings; Sunshine Act, 46213–46214

Personnel Management Office
NOTICES
Agency information collection activities:
Proposed collection; comment request, 46220

Prisons Bureau
PROPOSED RULES
Inmate control, custody, care, etc.:
Infectious disease management; voluntary and involuntary testing, 46136–46139

Public Health Service
See Centers for Disease Control and Prevention
See Food and Drug Administration

Research and Special Programs Administration
RULES
Hazardous materials:
Hazardous materials transportation—
Shipping papers; retention, 46123–46129

Securities and Exchange Commission
RULES
Securities:
Security futures transactions assessments and securities sales fees resulting from physical settlement of security futures, 46104–46108
NOTICES
Meetings; Sunshine Act, 46220–46221

State Department
RULES
Personnel:
Foreign Service candidates; worldwide availability requirement; waivers, 46108–46109

Statistical Reporting Service
See National Agricultural Statistics Service

Surface Transportation Board
NOTICES
Railroad operation, acquisition, construction, etc.:
Norfolk Southern Railway Co., 46247–46248

Thrift Supervision Office
NOTICES
Agency information collection activities:
Proposed collection; comment request, 46250–46254

Trade Representative, Office of United States
NOTICES
Steel products; Trade Act exclusions, 46221–46239
World Trade Organization:
Honduras; government procurement of products; treatment reinstatement, 46239

Transportation Department
See Coast Guard
See Federal Aviation Administration
See Federal Highway Administration
See Federal Railroad Administration
See Maritime Administration
See National Highway Traffic Safety Administration
See Research and Special Programs Administration
See Surface Transportation Board

Treasury Department
See Comptroller of the Currency
See Thrift Supervision Office
NOTICES
Agency information collection activities:
Submission for OMB review; comment request, 46248–46249
Meetings:
Debt Management Advisory Committee, 46249

Separate Parts In This Issue

Part II
Environmental Protection Agency, 46257–46295

Part III
Federal Communications Commission, 46297–46325

Part IV
Interior Department, Indian Affairs Bureau, 46327–46333

Part V
Housing and Urban Development Department, 46335–46337

Part VI
Children and Families Administration, Community Services Office, 46339–46362

Part VII
Department of Health and Human Services, Centers for Disease Control and Prevention, 46363–46366

Part VIII
Department of Interior, Bureau of Indian Affairs, 46367–46368

Reader Aids
Consult the Reader Aids section at the end of this issue for phone numbers, online resources, finding aids, reminders, and notice of recently enacted public laws. To subscribe to the Federal Register Table of Contents LISTSERV electronic mailing list, go to http://listserv.access.gpo.gov and select Online mailing list archives, FEDREGTOC-L, Join or leave the list (or change settings); then follow the instructions.

CFR PARTS AFFECTED IN THIS ISSUE

A cumulative list of the parts affected this month can be found in the Reader Aids section at the end of this issue.

7 CFR
457 46093

14 CFR
39 (3 documents) 46096, 46098, 46100
97 46102

Proposed Rules:
39 (2 documents) 46130, 46132

17 CFR
240 46104

22 CFR
11 46108

25 CFR
580 46109

Proposed Rules:
504 46134

28 CFR

Proposed Rules:
549 46136

40 CFR

Proposed Rules:
63 46258
261 46139

47 CFR
0 46112
1 46298

Proposed Rules:
73 46148

48 CFR
204 46112
252 46123
253 46112

49 CFR
172 46123
174 46123
175 46123
176 46123
177 46123

Proposed Rules:
571 46149

Rules and Regulations

Federal Register

Vol. 67, No. 134

Friday, July 12, 2002

This section of the FEDERAL REGISTER contains regulatory documents having general applicability and legal effect, most of which are keyed to and codified in the Code of Federal Regulations, which is published under 50 titles pursuant to 44 U.S.C. 1510.

The Code of Federal Regulations is sold by the Superintendent of Documents. Prices of new books are listed in the first FEDERAL REGISTER issue of each week.

DEPARTMENT OF AGRICULTURE

Federal Crop Insurance Corporation

7 CFR Part 457

Common Crop Insurance Regulations; Sugarcane Crop Insurance Provisions

AGENCY: Federal Crop Insurance Corporation, USDA.

ACTION: Final rule.

SUMMARY: The Federal Crop Insurance Corporation (FCIC) finalizes crop provisions for the insurance of sugarcane. The intended effect of this action is to provide policy changes to better meet the needs of the insured. The changes will apply for the 2003 and subsequent crop years.

EFFECTIVE DATE: This rule is effective August 12, 2002.

FOR FURTHER INFORMATION CONTACT: Arden Routh, Risk Management Specialist, Product Development Division, Federal Crop Insurance Corporation, United States Department of Agriculture, 6501 Beacon Drive, Kansas City, MO 64133, telephone (816) 926–7730.

SUPPLEMENTARY INFORMATION:

Executive Order 12866

This rule has been determined to be exempt for the purpose of Executive Order 12866 and, therefore, has not been reviewed by the Office of Management and Budget (OMB).

Paperwork Reduction Act of 1995

Pursuant to the Paperwork Reduction Act of 1995 (44 U.S.C. chapter 35), the collections of information in this rule have been approved by OMB under control number 0563–0053 through April 30, 2004.

Unfunded Mandates Reform Act of 1995

Title II of the Unfunded Mandates Reform Act of 1995 (UMRA) establishes requirements for Federal agencies to assess the effects of their regulatory actions on State, local, and tribal governments and the private sector. This rule contains no Federal mandates (under the regulatory provisions of title II of the UMRA) for State, local, and tribal governments or the private sector. Therefore, this rule is not subject to the requirements of sections 202 and 205 of the UMRA.

Executive Order 13132

The policy contained in this rule does not have any substantial direct effect on states, on the relationship between the national government and the states, or on the distribution of power and responsibilities among the various levels of government. Nor does this rule impose substantial direct compliance costs on state and local governments. Therefore, consultation with the states is not required.

Regulatory Flexibility Act

This regulation will not have a significant economic impact on a substantial number of small entities. Additionally, the regulation does not require any greater action on the part of small entities than is required on the part of large entities. The amount of work required of the insurance companies will not increase because the information must already be collected under the present policy. No additional work is required as a result of this action on the part of either the insured or the insurance companies. Therefore, this action is determined to be exempt from the provisions of the Regulatory Flexibility Act (5 U.S.C. 605), and no Regulatory Flexibility Analysis was prepared.

Federal Assistance Program

This program is listed in the Catalog of Federal Domestic Assistance under No. 10.450.

Executive Order 12372

This program is not subject to the provisions of Executive Order 12372, which requires intergovernmental consultation with State and local officials. See the Notice related to 7 CFR part 3015, subpart V, published at 48 FR 29115, June 24, 1983.

Executive Order 12988

This rule has been reviewed in accordance with Executive Order 12988 on civil justice reform. The provisions of this rule will not have a retroactive effect. The provisions of this rule will preempt State and local laws to the extent such State and local laws are inconsistent herewith. The administrative appeal provisions published at 7 CFR part 11 must be exhausted before any action for judicial review of any determination made by FCIC may be brought.

Environmental Evaluation

This action is not expected to have a significant economic impact on the quality of the human environment, health, and safety. Therefore, neither an Environmental Assessment nor an Environmental Impact Statement is needed.

Background

On October 18, 2000, FCIC published a notice of proposed rulemaking in the **Federal Register** at 65 FR 62311–62313 to revise 7 CFR 457.116 Sugarcane Crop Insurance Provisions, effective for the 2002 and succeeding crop years.

Following publication of the proposed rule the public was afforded 60 days to submit written comments and opinions. A total of 18 comments were received from two reinsured companies and a trade association. The comments received and FCIC's responses are as follows:

Comment. A comment from a trade association stated that the language in section 5(b)(1) is not clear as to which year's production guarantee will be used to determine if the sugarcane is damaged to the extent that it is uninsurable. The commenter also asked who will make the determination that such sugarcane will not produce the production guarantee. The commenter recommended clarifying this section by stating that we will not insure a field of sugarcane that did not produce the production guarantee the previous year.

Response. FCIC disagrees with the commenter's recommended change to section 5(b)(1). Adoption would render the sugarcane uninsurable any time an indemnity is paid the previous year even if the sugarcane has recovered. However, FCIC has clarified that

sugarcane damaged the previous crop year will not be insurable for the current crop year if the sugarcane is unable to produce the yield used to establish the production guarantee for the unit. This clarification is consistent with other crop policies. Company loss adjusters must inspect damaged sugarcane prior to the dates listed in section 7(a)(3) or (4), to determine if such sugarcane is insurable.

Comment. A trade association and an approved insurance provider questioned what age limitations (number of years) will be applicable in section 5(b)(2)?

Response. The age limitation by sugarcane variety, if applicable, will be listed in the Sugarcane Special Provisions. A general example of such a statement would be ''Sugarcane variety LCP 85–384 will not be insurable the sixth year after the initial planting of the sugarcane.''

Comment. An approved insurance provider objected to adding an age limitation on insurable sugarcane in section 5(b)(2). The commenter said the age is not the key variable in the yield but rather care and cultural practices determine yields.

Response. Research shows that sugarcane production decreases with the age of a sugarcane stand and at some point the sugarcane will be unable to produce the yield used to establish the production guarantee. It would violate the principals of insurance to insure a crop that has no expectations of producing the production guarantee. Therefore, no change has been made.

Comment. A trade association recommended that approved insurance providers be given the ability to review the age limitations that will be contained in the Special Provisions prior to issuance of the Special Provisions. This would allow them the opportunity to suggest any changes to these provisions.

Response. The Risk Management Agency Regional Offices will work with all appropriate parties to obtain the information to determine the appropriate age limitations. Any comments will be considered during the process.

Comment. A trade association and an approved insurance provider recommended that FCIC list in the Sugarcane Loss Adjustment Standards Handbook the new and old varieties of sugarcane currently being grown. The commenters also stated that current producers are obtaining good yields on some varieties of sugarcane for up to six years and nearly all varieties for up to four years.

Response. The list of insurable sugarcane must also be available to producers. Therefore, the Sugarcane Special Provisions, which are issued annually, will contain a list of insurable sugarcane varieties and their age limitations. FCIC will examine the yields of the varieties of sugarcane when setting the age limitations.

Comment. A trade association and an approved insurance provider commented about the language in section 5(b)(2) as some producers may have sugarcane that exceeds the age limitation for insurance but the producers prefer to continue to keep such sugarcane under production. In addition, the commenters asked if a producer must request coverage by written agreement to continue to insure such sugarcane.

Response. Coverage for sugarcane that has exceeded the age limitation may be provided if the producer requests that such sugarcane be insured and the insurance provider agrees in writing to insure such acreage. Agreements in writing must not be provided unless the producer can show that the crop has the expectation of producing at least the yield used to establish the production guarantee.

Comment. A trade association stated that although limiting the age at which sugarcane can be insured may eliminate the need for performing stand appraisals, there will still be the need for some type of appraisal if the producer requests insurance of such sugarcane by written agreement.

Response. FCIC agrees there is a need for an appraisal method to determine the insurability of sugarcane that has exceeded the age limitation. The appraisal method will be described in the Sugarcane Loss Adjustment Standards Handbook, which is posted on FCIC's website at: www.rma.usda.gov.

Comment. A trade association asked if the dates in sections 7(a)(3) and (4) are needed if insurance coverage is not allowed on sugarcane that was damaged the previous year. Also, if a written agreement is allowed, language should be provided to state that a field inspection is or is not required.

Response. Sugarcane damaged the previous year may be insurable if it is able to produce the yield used to establish the production guarantee for the current crop year. The dates specified in sections 7(a)(3) and (4) are the dates when insurance will attach to such sugarcane. Language has been added to section 5(b)(2) to specify that an appraisal is needed to determine whether the sugarcane is able to produce the yield used to establish the production guarantee for the current crop year.

Comment. A trade association asked if the proposed language in section 7(b)(2) means that a subsequent year's coverage for a sugarcane crop in all other states except Louisiana could begin prior to the end of the previous year's insurance period of April 30.

Response. FCIC has revised section 7(b)(2) to specify the later of April 15, or 30 days following harvest of the previous crop for stubble cane. This will allow time for an appraisal before insurance attaches.

Comment. A trade association recommended clarifying the language in section 9(a)(2) to state that sugarcane cut for seed without an appraisal will be considered as destroyed without consent and not less than the production guarantee will be considered as production to count. The commenter also requested clarification as to what production will be used to update the actual production history database for the following year for such acreage.

Response. FCIC agrees that not more than the production guarantee should be assigned as production to count and has revised the provision accordingly. This is consistent with section 10(c)(1)(i)(B). For actual production history purposes, the number of acres of sugarcane destroyed without consent will be counted in the total acreage for the unit, but the production to count for such acreage will be zero.

Comment. Two comments were received, one from a trade association and one from an approved insurance provider regarding section 9(a)(2) that a producer knows which acreage is going to be planted or replanted, but may not know which acreage will be cut for seed.

Response. Producers should certainly know before they harvest the crop, which acres are going to be harvested for seed. The 15 day requirement is needed to allow the approved insurance provider time to appraise the acreage. Therefore, no change has been made.

Comment. A trade association commented on the addition of language in section 9(a)(2) that requires an appraisal of sugarcane that will be cut for seed, even though there may not be a loss on the sugarcane. This will result in additional expense to the companies.

Response. The current Sugarcane Crop Provisions in section 9(a)(2) requires the producer to give at least 15 days notice prior to cutting sugarcane for seed and after such notice the sugarcane will be appraised for its sugar potential. Section 9(a)(3), requires a producer to request an appraisal if any time during the crop year sugarcane acreage cut for seed will not produce at least the production guarantee. If an

appraisal is not requested the production to count for such acreage will be the production guarantee. No additional expenses will be incurred by approved insurance providers, because this is currently a requirement in the policy. Therefore, no change has been made.

Comment. A trade association recommended for consistency that the same production guarantee be used in the settlement of claim examples in section 10.

Response. FCIC agrees with the comment and has clarified the settlement of claim examples by using the term production guarantee, where applicable, and the same number of pounds for the production guarantee.

In addition to the changes described above, FCIC has made the following changes:

1. Added language in section 7(a)(1) to clarify when insurance attaches for plant cane.

2. Clarified that the language in section 9(a)(3) refers to sugarcane cut for seed.

3. Replaced the term ''approved yield'' with ''production guarantee'' in section 9(a)(2) to be consistent with section 10(c)(1)(i)(B) of the current Sugarcane Crop Provisions and also in section 9(a)(3) to be consistent with section 10(c)(1)(iv) of this final rule.

List of Subjects in 7 CFR Part 457

Crop insurance, Sugarcane, reporting and recordkeeping requirements.

Final Rule

Accordingly, as set forth in the preamble, the Federal Crop Insurance Corporation amends the Common Crop Insurance Regulations (7 CFR part 457) for the 2003 and succeeding crop years as follows:

PART 457—COMMON CROP INSURANCE REGULATIONS

1. The authority citation for 7 CFR part 457 continues to read as follows:

Authority: 7 U.S.C. 1506(1), 1506(p).

2. Amend 457.116 as follows:

a. Revise the first sentence of the introductory text;

b. In the crop insurance provisions:

i. In Section 1, revise the definition of ''sugarcane'';

ii. Revise sections 3, 5, 6, and 7;

iii. Revise section 9(a) introductory text and 9(a)(2), and add section 9(a)(3);

iv. Add 2 examples following section 10(b)(4);

v. Remove section 10(c)(1)(iv);

vi. Redesignate sections 10(c)(1)(v) and (c)(1)(vi) as sections 10(c)(1)(iv) and (c)(1)(v), respectively; and

vii. Revise newly designated sections 10(c)(1)(iv) and (c)(1)(v) introductory text.

The revisions and additions read as follows:

§ 457.116 Sugarcane crop insurance provisions.

The Sugarcane Crop Insurance Provisions for the 2003 and succeeding crop years are as follows:

* * * * *

1. Definitions.

* * * * *

Sugarcane. The grass, Saccharum officinarum, that is grown to produce sugar.

* * * * *

3. Contract Changes.

In accordance with section 4 of the Basic Provisions (§ 457.8), the contract change date is June 30 preceding the cancellation date.

* * * * *

5. Insured Crop.

(a) In accordance with section 8 of the Basic Provisions (§ 457.8), the crop insured will be all the sugarcane in the county for which a premium rate is provided by the actuarial documents:

(1) In which you have a share;

(2) That is grown for processing for sugar or for seed; and

(3) That is not interplanted with another crop, unless allowed by a written agreement.

(b) In addition to the crop listed as not insured in section 8(b) of the Basic Provisions (§ 457.8), we will not insure any sugarcane:

(1) That was damaged the previous crop year to the extent the sugarcane is unable to produce the yield used to establish the production guarantee for the unit for the current crop year; or

(2) That exceeds the age limitations (by variety, if applicable) contained in the Special Provisions , unless we agree in writing to insure such acreage. An agreement in writing will not be provided unless, after an appraisal, we determine that the crop is able to produce at least the yield used to establish the production guarantee for the unit for the current crop year.

6. Insurable Acreage.

Section 9(a)(3) of the Basic Provisions (§ 457.8), is not applicable to the Sugarcane Crop Insurance Provisions.

7. Insurance Period.

(a) In addition to the provisions of section 11 of the Basic Provisions (§ 457.8), insurance attaches:

(1) On the later of the day we accept your application or at the time of planting for plant cane;

(2) On the first day following harvest of the previous crop for stubble cane except as contained in sections 7(a)(3) and (4);

(3) On the later of April 15 or 30 days following harvest of the previous crop for stubble cane damaged during the previous crop year in all states (except Louisiana); and

(4) On the later of April 30 or 30 days following harvest of the previous crop for stubble cane damaged during the previous crop year in Louisiana.

(b) In accordance with the provisions of section 11 of the Basic Provisions (§ 457.8), the calendar date for the end of the insurance period is:

(1) January 31 in Louisiana; and

(2) April 30 in all other states.

* * * * *

9. Duties in the Event of Damage or Loss or Cutting the Sugarcane for Seed.

(a) In addition to your duties under section 14 of the Basic Provisions (§ 457.8), in the event of damage or loss:

(1) * * *

(2) You must give us notice at least 15 days before you begin cutting any sugarcane for seed. Your notice must include the unit number and the number of acres you intend to harvest as seed. Failure to give us timely notice will cause the acreage cut for seed to be considered as put to another use without consent. The production to count for such acreage will not be less than the production guarantee.

(3) You must request an appraisal if any time during the crop year sugarcane acreage cut for seed will not produce at least the production guarantee so we can determine the production to count. If you do not request an appraisal, the production to count for such acreage will be the production guarantee.

* * * * *

10. Settlement of Claim.

* * * * *

(b) * * *

(4) * * *

Example 1: Assume you have a 100 percent share in a unit of 100 acres of sugarcane, an approved yield of 6,000 pounds of raw sugar per acre, a coverage election of 65 percent, and a price election of $0.12 a pound. The production guarantee would be 3,900 pounds of raw sugar per acre (6,000 × 65%). Further assume that you are only able to harvest 200,000 pounds of raw sugar because the unit was damaged by an insurable cause of loss. Your indemnity would be calculated as follows:

(1) 100 acres × 3,900 pound production guarantee = 390,000 pound production guarantee;

(2) 390,000 pound production guarantee − 200,000 pounds harvested production = 190,000 pound production loss;

(3) 190,000 pound production loss × $0.12 price election = $22,800 loss; and

(4) $22,800 loss × 100 percent share = $22,800 indemnity payment.

Example 2: Assume the same set of facts. Also, assume that you cut 20 acres of this unit for seed without giving notice that you were cutting this acreage for seed and that you are only able to harvest 200,000 pounds from the remaining 80 acres. Your indemnity would be calculated as follows:

(1) 100 acres × 3,900 pound production guarantee = 390,000 pound production guarantee;

(2) 390,000 pound production guarantee − 278,000 (200,000 pounds harvested production + 78,000 pounds production for putting acreage to another use without consent, (20 acres × 3,900 pound production guarantee per acre)) = 112,000 pound production loss;

(3) 112,000 pound production loss × $0.12 price election = $13,440 loss; and

(4) $13,440 loss × 100 percent share = $13,440 indemnity payment.

(c) * * *

(1) * * *

(iv) Potential production on insured acreage harvested for seed (see section 9(a)(3));

(v) Potential production on insured acreage you want to put to another use or you wish to abandon and no longer care for, if you and we agree on the appraised amount of production. Upon such agreement, the insurance period for that acreage will end if you put the acreage to another use or abandon the crop. If agreement on the appraised amount of production is not reached:

* * * * *

Signed in Washington, DC, on June 26, 2002.

Ross J. Davidson, Jr.,

Administrator, Federal Crop Insurance Corporation.

[FR Doc. 02–16680 Filed 7–11–02; 8:45 am]

BILLING CODE 3410–08–P

DEPARTMENT OF TRANSPORTATION

Federal Aviation Administration

14 CFR Part 39

[Docket No. 2001–NM–244–AD; Amendment 39–12816; AD 2002–14–16]

RIN 2120–AA64

Airworthiness Directives; McDonnell Douglas Model 717–200 Airplanes

AGENCY: Federal Aviation Administration, DOT.

ACTION: Final rule.

SUMMARY: This amendment adopts a new airworthiness directive (AD), applicable to certain McDonnell Douglas Model 717–200 airplanes, that requires repetitive inspections for cracking of the spoiler hold-down actuator supports located on the left and right wing rear spars; adjustment of the spoiler hold-down actuators; and replacement of cracked spoiler hold-down actuator supports with new, improved supports. This AD also requires replacement of all spoiler hold-down actuator supports with new, improved supports, which terminates the repetitive inspections. The actions specified by this AD are intended to detect and correct as well as to prevent cracks in the spoiler hold-down actuator supports, which could lead to reduced spoiler hold-down capability, resulting in loss of the back-up protection of the spoiler float hold-down and unavailability of monitoring for an uncommanded spoiler movement.

DATES: Effective August 16, 2002.

The incorporation by reference of certain publications listed in the regulations is approved by the Director of the Federal Register as of August 16, 2002.

ADDRESSES: The service information referenced in this AD may be obtained from Boeing Commercial Aircraft Group, Long Beach Division, 3855 Lakewood Boulevard, Long Beach, California 90846, Attention: Data and Service Management, Dept. C1–L5A (D800–0024). This information may be examined at the Federal Aviation Administration (FAA), Transport Airplane Directorate, Rules Docket, 1601 Lind Avenue, SW., Renton, Washington; or at the FAA, Los Angeles Aircraft Certification Office, 3960 Paramount Boulevard, Lakewood, California; or at the Office of the Federal Register, 800 North Capitol Street, NW., suite 700, Washington, DC.

FOR FURTHER INFORMATION CONTACT: *Technical Information:* Maureen Moreland, Aerospace Engineer, Airframe Branch, ANM–120L, FAA, Los Angeles Aircraft Certification Office, 3960 Paramount Boulevard, Lakewood, California 90712–4137; telephone (562) 627–5238; fax (562) 627–5210.

Other Information: Judy Golder, Airworthiness Directive Technical Editor/Writer; telephone (425) 687–4241; fax (425) 227–1232. Questions or comments may also be sent via the Internet using the following address: *judy.golder@faa.gov.* Questions or comments sent via the Internet as attached electronic files must be formatted in Microsoft Word 97 for Windows or ASCI text,

SUPPLEMENTARY INFORMATION: A proposal to amend part 39 of the Federal Aviation Regulations (14 CFR part 39) to include an airworthiness directive (AD) that is applicable to certain McDonnell Douglas Model 717 series airplanes was published in the **Federal Register** on January 4, 2002 (67 FR 538). That action proposed to require repetitive inspections for cracking of the spoiler hold-down actuator supports located on the left and right wing rear spars; adjustment of the spoiler hold-down actuators; and replacement of cracked spoiler hold-down actuator supports with new, improved supports. That action also proposed to require replacement of all spoiler hold-down actuator supports with new, improved supports which terminates the repetitive inspections.

Explanation of Change to Applicability

The FAA has revised the applicability of the existing AD to identify the model designation as published in the most recent type certificate data sheet for the affected models.

Explanation of Changes to Paragraph (a) of this AD

Paragraph (a) of the proposed rule pertains to both initial and repetitive inspections of the spoiler hold-down actuator supports. For purposes of clarity, this AD has been revised to specify requirements for the initial inspection in paragraph (a) of this AD and those for repetitive inspections in paragraph (b) of this AD.

In addition, the FAA has changed all reference to a ''detailed visual inspection'' to a ''detailed inspection'' in this final rule.

Explanation of Changes to Notes 3 and 4

Information pertaining to inspections accomplished prior to the effective date of this AD in accordance with Boeing Alert Service Bulletin 717–57A0002, Revision 01, dated February 28, 2001, has been removed from Note 3 of the proposed rule and incorporated into paragraph (c) of this AD to clarify the compliance time for performing the next repetitive inspection.

Information pertaining to replacement of a spoiler hold-down actuator support, accomplished prior to the effective date of this AD in accordance with Boeing Service Bulletin 717–57–0004, dated May 30, 2001, has been removed from Note 4 of the proposed rule and incorporated into paragraph (d) of this AD to clarify that the replacement constitutes terminating action for the particular actuator support.

Comments

Interested persons have been afforded an opportunity to participate in the making of this amendment. Due consideration has been given to the comments received.

Request To Extend Compliance Time for Terminating Action

Two commenters request that the compliance time for terminating action be extended from 15 months to 60 months after the effective date of the AD. The commenters suggest that the proposed repetitive inspections at intervals of 500 flight hours will ensure airworthiness until the 60-month time limit is reached.

The FAA does not concur. The 15-month compliance period was based upon study of the consequences of failure of the spoiler hold-down actuator supports and associated parts, the availability of replacement parts, typical maintenance intervals, and the work

hours required to accomplish terminating action. In addition, the manufacturer of the airplane recommended a 15-month period for replacement of the specified parts. The FAA finds that a compliance time which does not exceed 15 months is necessary to ensure continued operational safety of these airplanes. However, paragraph (e) of this final rule does provide affected operators the opportunity to apply for an adjustment of the compliance time if data are presented to justify such an adjustment. Accordingly, no change has been made to the proposed rule in this regard.

Conclusion

After careful review of the available data, including the comments noted above, the FAA has determined that air safety and the public interest require the adoption of the rule with the changes described previously. We have determined that these changes will neither increase the economic burden on any operator nor increase the scope of the AD.

Cost Impact

There are approximately 52 McDonnell Douglas Model 717 series airplanes of the affected design in the worldwide fleet. The FAA estimates that 36 airplanes of U.S. registry will be affected by this AD.

It will take approximately 12 work hours per airplane to accomplish the required detailed inspection for cracks and the adjustment of the spoiler hold-down actuator supports at an average labor rate of $60 per work hour. Based on these figures, the cost impact of the inspection and adjustment on U.S. operators is estimated to be $25,920, or $720 per airplane, per inspection cycle.

It will take approximately 18 to 43 work hours per airplane to accomplish the replacement of the spoiler hold-down actuator supports and associated parts at an average labor rate of $60 per work hour. The manufacturer has committed previously to its customers that it will bear the cost of replacement parts. As a result, the cost of those parts is not attributable to this AD. Based on these figures, the cost impact of the replacement on U.S. operators is estimated to be between $38,880 and $92,880, or between $1,080 and $2,580 per airplane.

The cost impact figures discussed above are based on assumptions that no operator has yet accomplished any of the requirements of this AD action, and that no operator would accomplish those actions in the future if this AD were not adopted. The cost impact figures discussed in AD rulemaking actions represent only the time necessary to perform the specific actions actually required by the AD. These figures typically do not include incidental costs, such as the time required to gain access and close up, planning time, or time necessitated by other administrative actions.

Regulatory Impact

The regulations adopted herein will not have a substantial direct effect on the States, on the relationship between the national Government and the States, or on the distribution of power and responsibilities among the various levels of government. Therefore, it is determined that this final rule does not have federalism implications under Executive Order 13132.

For the reasons discussed above, I certify that this action (1) is not a ''significant regulatory action'' under Executive Order 12866; (2) is not a ''significant rule'' under DOT Regulatory Policies and Procedures (44 FR 11034, February 26, 1979); and (3) will not have a significant economic impact, positive or negative, on a substantial number of small entities under the criteria of the Regulatory Flexibility Act. A final evaluation has been prepared for this action and it is contained in the Rules Docket. A copy of it may be obtained from the Rules Docket at the location provided under the caption **ADDRESSES.**

List of Subjects in 14 CFR Part 39

Air transportation, Aircraft, Aviation safety, Incorporation by reference, Safety.

Adoption of the Amendment

Accordingly, pursuant to the authority delegated to me by the Administrator, the Federal Aviation Administration amends part 39 of the Federal Aviation Regulations (14 CFR part 39) as follows:

PART 39—AIRWORTHINESS DIRECTIVES

1. The authority citation for part 39 continues to read as follows:

Authority: 49 U.S.C. 106(g), 40113, 44701.

§ 39.13 [Amended]

2. Section 39.13 is amended by adding the following new airworthiness directive:

2002–14–16 McDonnell Douglas: Amendment 39–12816. Docket 2001–NM–244–AD.

Applicability: Model 717–200 airplanes, manufacturer's fuselage numbers 5002 through 5064 inclusive, and 5066 through 5073 inclusive; certificated in any category.

Note 1: This AD applies to each airplane identified in the preceding applicability provision, regardless of whether it has been modified, altered, or repaired in the area subject to the requirements of this AD. For airplanes that have been modified, altered, or repaired so that the performance of the requirements of this AD is affected, the owner/operator must request approval for an alternative method of compliance in accordance with paragraph (e) of this AD. The request should include an assessment of the effect of the modification, alteration, or repair on the unsafe condition addressed by this AD; and, if the unsafe condition has not been eliminated, the request should include specific proposed actions to address it.

Compliance: Required as indicated, unless accomplished previously.

To detect and correct as well as to prevent cracks in the spoiler hold-down actuator supports, which could lead to reduced spoiler hold-down capability, resulting in loss of the back-up protection of the spoiler float hold-down and unavailability of monitoring for an uncommanded spoiler movement, accomplish the following:

Initial Inspection

(a) Prior to the accumulation of 1,500 total flight hours (FH) or within 500 FH after the effective date of this AD, whichever occurs later: Perform a detailed inspection of the spoiler hold-down actuator supports on the left and right wing rear spar for cracks, in accordance with Boeing Alert Service Bulletin 717–57A0002, Revision 02, dated October 2, 2001.

(1) If no crack is detected: Prior to further flight, adjust the spoiler hold-down actuators in accordance with the service bulletin.

(2) If any crack is detected: Prior to further flight, adjust the spoiler hold-down actuators in accordance with the service bulletin. Within 500 flight hours after accomplishment of the inspection, replace the cracked spoiler hold-down actuator supports and associated idler link(s), hinge pins, and attaching parts with new parts and adjust the spoiler hold-down actuators, in accordance with Boeing Service Bulletin 717–57–0004, Revision 01, dated October 2, 2001. Replacement of a cracked spoiler hold-down actuator support as required herein constitutes terminating action for that actuator support for the requirements of this AD.

Note 2: For the purposes of this AD, a detailed inspection is defined as: ''An intensive visual examination of a specific structural area, system, installation, or assembly to detect damage, failure, or irregularity. Available lighting is normally supplemented with a direct source of good lighting at intensity deemed appropriate by the inspector. Inspection aids such as mirror, magnifying lenses, etc., may be used. Surface cleaning and elaborate access procedures may be required.''

Repetitive Inspections

(b) If the initial inspection required by paragraph (a) of this AD does not detect cracks, repeat the detailed inspection of the spoiler hold-down actuator support, in accordance with Boeing Alert Service Bulletin 717–57A0002, Revision 02, dated

October 2, 2001, at intervals not to exceed 500 flight hours until the accomplishment of the requirements of paragraph (d) of this AD.

(c) If a detailed inspection for cracks of a spoiler hold-down actuator support was performed and the actuator was adjusted prior to the effective date of this AD, in accordance with Boeing Alert Service Bulletin 717–57A0002, Revision 01, dated February 28, 2001, repeat the detailed inspection in accordance with Boeing Alert Service Bulletin 717–57A0002, Revision 02, dated October 2, 2001, within 500 FH of the last inspection or within 500 FH of the effective date of this AD, whichever occurs later.

Terminating Action

(d) Within 15 months after the effective date of this AD: Replace spoiler hold-down actuator supports, idler links, hinge pin, and attaching parts with new parts and adjust the spoiler hold-down actuators, in accordance with Boeing Service Bulletin 717–57–0004, Revision 01, dated October 2, 2001. Replacement of all spoiler hold-down actuators in accordance with Boeing Service Bulletin 717–57–0004, Revision 01, dated October 2, 2001, constitutes terminating action for the requirements of this AD.

(1) Any spoiler hold-down actuator supports, idler links, hinge pin, or attaching parts which have previously been replaced in accordance with paragraph (a)(2) of this AD do not need to be replaced.

(2) Any spoiler hold-down actuator supports, idler links, hinge pins, or attaching parts which were replaced prior to the effective date of this AD in accordance with Boeing Service Bulletin 717–57–0004, original issue, dated May 30, 2001, do not need to be replaced.

Alternative Methods of Compliance

(e) An alternative method of compliance or adjustment of the compliance time that provides an acceptable level of safety may be used if approved by the Manager, Los Angeles Aircraft Certification Office (ACO), FAA. Operators shall submit their requests through an appropriate FAA Principal Maintenance Inspector, who may add comments and then send it to the Manager, Los Angeles ACO.

Note 3: Information concerning the existence of approved alternative methods of compliance with this AD, if any, may be obtained from the Los Angeles ACO.

Special Flight Permits

(f) Special flight permits may be issued in accordance with sections 21.197 and 21.199 of the Federal Aviation Regulations (14 CFR 21.197 and 21.199) to operate the airplane to a location where the requirements of this AD can be accomplished.

Incorporation by Reference

(g) The actions shall be done in accordance with Boeing Alert Service Bulletin 717–57A0002, Revision 02, dated October 2, 2001; and Boeing Service Bulletin 717–57–0004, Revision 01, dated October 2, 2001; as applicable. This incorporation by reference was approved by the Director of the Federal Register in accordance with 5 U.S.C. 552(a) and 1 CFR part 51. Copies may be obtained from Boeing Commercial Aircraft Group, Long Beach Division, 3855 Lakewood Boulevard, Long Beach, California 90846, Attention: Data and Service Management, Dept. C1-L5A (D800–0024). Copies may be inspected at the FAA, Transport Airplane Directorate, 1601 Lind Avenue, SW., Renton, Washington; or at the FAA, Los Angeles Aircraft Certification Office, 3960 Paramount Boulevard, Lakewood, California; or at the Office of the Federal Register, 800 North Capitol Street, NW., suite 700, Washington, DC.

Effective Date

(h) This amendment becomes effective on August 16, 2002.

Issued in Renton, Washington, on July 3, 2002.

Jeffrey E. Duven,

Acting Manager, Transport Airplane Directorate, Aircraft Certification Service.

[FR Doc. 02–17299 Filed 7–11–02; 8:45 am]

BILLING CODE 4910–13–P

DEPARTMENT OF TRANSPORTATION

Federal Aviation Administration

14 CFR Part 39

[Docket No. 2002–NM–108–AD; Amendment 39–12802; AD 2002–14–02]

RIN 2120–AA64

Airworthiness Directives; Boeing Model 767–300 Series Airplanes Equipped With Rolls Royce RB211–524H Series Engines

AGENCY: Federal Aviation Administration, DOT.

ACTION: Final rule; request for comments.

SUMMARY: This amendment adopts a new airworthiness directive (AD) that is applicable to certain Boeing Model 767–300 series airplanes equipped with Rolls Royce RB211–524H series engines. This action requires re-routing a certain wire bundle containing control wiring for the thrust reverser actuation system. This action is necessary to ensure that control wiring for the thrust reverser actuation system is adequately separated. Inadequately separated wiring could allow a single failure to result in uncommanded deployment of a thrust reverser and consequent reduced controllability of the airplane. This action is intended to address the identified unsafe condition.

DATES: Effective July 29, 2002.

The incorporation by reference of certain publications listed in the regulations is approved by the Director of the Federal Register as of July 29, 2002.

Comments for inclusion in the Rules Docket must be received on or before September 10, 2002.

ADDRESSES: Submit comments in triplicate to the Federal Aviation Administration (FAA), Transport Airplane Directorate, ANM–114, Attention: Rules Docket No. 2002–NM–108–AD, 1601 Lind Avenue, SW., Renton, Washington 98055–4056. Comments may be inspected at this location between 9 a.m. and 3 p.m., Monday through Friday, except Federal holidays. Comments may be submitted via fax to (425) 227–1232. Comments may also be sent via the Internet using the following address: *9-anm-iarcomment@faa.gov.* Comments sent via fax or the Internet must contain ''Docket No. 2002–NM–108–AD'' in the subject line and need not be submitted in triplicate. Comments sent via the Internet as attached electronic files must be formatted in Microsoft Word 97 for Windows or ASCII text.

The service information referenced in this AD may be obtained from Boeing Commercial Airplane Group, P.O. Box 3707, Seattle, Washington 98124–2207. This information may be examined at the FAA, Transport Airplane Directorate, 1601 Lind Avenue, SW., Renton, Washington; or at the Office of the Federal Register, 800 North Capitol Street, NW., suite 700, Washington, DC.

FOR FURTHER INFORMATION CONTACT: *Technical Information:* Dan Kinney, Aerospace Engineer, Propulsion Branch, ANM–140S, FAA, Seattle Aircraft Certification Office, 1601 Lind Avenue, SW., Renton, Washington 98055–4056; telephone (425) 227–2666; fax (425) 227–1181.

Other Information: Judy Golder, Airworthiness Directive Technical Editor/Writer; telephone (425) 687–4241, fax (425) 227–1232. Questions or comments may also be sent via the Internet using the following address: *judy.golder@faa.gov.* Questions or comments sent via the Internet as attached electronic files must be formatted in Microsoft Word 97 for Windows or ASCII text.

SUPPLEMENTARY INFORMATION: During inspections performed in the course of certificating Boeing Model 767–400ER series airplanes, the FAA discovered that control wiring for the thrust reverser actuation system brake was routed under the same clamps as wiring that controls the pressure regulating shut-off valve and the differential pressure valve of the thrust reverser system, as well as wiring of unrelated systems. Due to the criticality of an uncommanded deployment of a thrust reverser in flight, the thrust reverser

actuation system incorporates multiple independent systems to lock the thrust reverser in the ''stowed'' position. The intent is that, if one locking system fails, the other locking systems will continue to function, keeping the thrust reverser locked in the ''stowed'' position. However, inadequate separation of control wiring for the thrust reverser actuation system could allow a single failure to damage wiring for more than one locking system, which could result in an uncommanded deployment of a thrust reverser and consequent reduced controllability of the airplane.

A subsequent review of wiring designs on other Model 767 series airplanes revealed that a condition similar to that described previously also exists on Model 767–300 series airplanes equipped with Rolls Royce RB211–524H series engines. Therefore, these airplanes are subject to the same unsafe condition.

Explanation of Relevant Service Information

The FAA has reviewed and approved Boeing Service Bulletin 767–78–0085, dated November 8, 2001. That service bulletin describes procedures for re-routing wire bundle W518, which is located along the leading edge of the right wing from the outboard pressure seal to the wing/strut disconnect. The procedures include performing a functional test to verify proper operation of the thrust reverser actuation system following the re-routing of the wire bundle. Accomplishment of the actions specified in the service bulletin is intended to adequately address the identified unsafe condition.

Explanation of Requirements of the Rule

Since an unsafe condition has been identified that is likely to exist or develop on other airplanes of the same type design that may be registered in the United States at some time in the future, this AD is being issued to ensure that control wiring for the thrust reverser actuation system is adequately separated. Inadequately separated wiring could allow a single failure to result in uncommanded deployment of a thrust reverser and consequent reduced controllability of the airplane. This AD requires accomplishment of the actions specified in the service bulletin described previously.

Cost Impact

None of the airplanes affected by this action are on the U.S. Register. All airplanes included in the applicability of this rule currently are operated by non-U.S. operators under foreign registry; therefore, they are not directly affected by this AD action. However, the FAA considers that this rule is necessary to ensure that the unsafe condition is addressed in the event that any of these subject airplanes are imported and placed on the U.S. Register in the future.

Should an affected airplane be imported and placed on the U.S. Register in the future, it would require approximately 10 work hours to accomplish the required actions, at an average labor rate of $60 per work hour. Based on these figures, the cost impact of this AD would be $600 per airplane.

Determination of Rule's Effective Date

Since this AD action does not affect any airplane that is currently on the U.S. Register, it has no adverse economic impact and imposes no additional burden on any person. Therefore, prior notice and public procedures hereon are unnecessary and the amendment may be made effective in less than 30 days after publication in the **Federal Register**.

Comments Invited

Although this action is in the form of a final rule and was not preceded by notice and opportunity for public comment, comments are invited on this rule. Interested persons are invited to comment on this rule by submitting such written data, views, or arguments as they may desire. Communications shall identify the Rules Docket number and be submitted in triplicate to the address specified under the caption **ADDRESSES.** All communications received on or before the closing date for comments will be considered, and this rule may be amended in light of the comments received. Factual information that supports the commenter's ideas and suggestions is extremely helpful in evaluating the effectiveness of the AD action and determining whether additional rulemaking action would be needed.

Submit comments using the following format:

- Organize comments issue-by-issue. For example, discuss a request to change the compliance time and a request to change the service bulletin reference as two separate issues.
- For each issue, state what specific change to the AD is being requested.
- Include justification (*e.g.,* reasons or data) for each request.

Comments are specifically invited on the overall regulatory, economic, environmental, and energy aspects of the rule that might suggest a need to modify the rule. All comments submitted will be available, both before and after the closing date for comments, in the Rules Docket for examination by interested persons. A report that summarizes each FAA-public contact concerned with the substance of this AD will be filed in the Rules Docket.

Commenters wishing the FAA to acknowledge receipt of their comments submitted in response to this rule must submit a self-addressed, stamped postcard on which the following statement is made: ''Comments to Docket Number 2002–NM–108–AD.'' The postcard will be date stamped and returned to the commenter.

Regulatory Impact

The regulations adopted herein will not have a substantial direct effect on the States, on the relationship between the national Government and the States, or on the distribution of power and responsibilities among the various levels of government. Therefore, it is determined that this final rule does not have federalism implications under Executive Order 13132.

For the reasons discussed above, I certify that this action (1) is not a ''significant regulatory action'' under Executive Order 12866; (2) is not a ''significant rule'' under DOT Regulatory Policies and Procedures (44 FR 11034, February 26, 1979); and (3) will not have a significant economic impact, positive or negative, on a substantial number of small entities under the criteria of the Regulatory Flexibility Act. A final evaluation has been prepared for this action and it is contained in the Rules Docket. A copy of it may be obtained from the Rules Docket at the location provided under the caption **ADDRESSES.**

List of Subjects in 14 CFR Part 39

Air transportation, Aircraft, Aviation safety, Incorporation by reference, Safety.

Adoption of the Amendment

Accordingly, pursuant to the authority delegated to me by the Administrator, the Federal Aviation Administration amends part 39 of the Federal Aviation Regulations (14 CFR part 39) as follows:

PART 39—AIRWORTHINESS DIRECTIVES

1. The authority citation for part 39 continues to read as follows:

Authority: 49 U.S.C. 106(g), 40113, 44701.

§ 39.13 [Amended]

2. Section 39.13 is amended by adding the following new airworthiness directive:

2002–14–02 Boeing: Amendment 39–12802. Docket 2002–NM–108–AD.

Applicability: Model 767–300 series airplanes, line numbers 001 through 810 inclusive, certificated in any category, and equipped with Rolls Royce RB211–524H series engines.

Note 1: This AD applies to each airplane identified in the preceding applicability provision, regardless of whether it has been modified, altered, or repaired in the area subject to the requirements of this AD. For airplanes that have been modified, altered, or repaired so that the performance of the requirements of this AD is affected, the owner/operator must request approval for an alternative method of compliance in accordance with paragraph (b) of this AD. The request should include an assessment of the effect of the modification, alteration, or repair on the unsafe condition addressed by this AD; and, if the unsafe condition has not been eliminated, the request should include specific proposed actions to address it.

Compliance: Required as indicated, unless accomplished previously.

To ensure that control wiring for the thrust reverser actuation system is adequately separated in order to prevent a single failure from resulting in uncommanded deployment of a thrust reverser and consequent reduced controllability of the airplane, accomplish the following:

Re-Routing of Wire Bundle and Functional Test

(a) Within 36 months after the effective date of this AD, re-route wire bundle W518 (which is located along the leading edge of the right wing from the outboard pressure seal to the wing/strut disconnect), according to Boeing Service Bulletin 767–78–0085, dated November 8, 2001. Before the next flight after the re-routing, the functional test specified in the procedures in the service bulletin must be successfully completed.

Alternative Methods of Compliance

(b) An alternative method of compliance or adjustment of the compliance time that provides an acceptable level of safety may be used if approved by the Manager, Seattle Aircraft Certification Office (ACO), FAA. Operators shall submit their requests through an appropriate FAA Principal Maintenance Inspector, who may add comments and then send it to the Manager, Seattle ACO.

Note 2: Information concerning the existence of approved alternative methods of compliance with this AD, if any, may be obtained from the Seattle ACO.

Special Flight Permits

(c) Special flight permits may be issued in accordance with sections 21.197 and 21.199 of the Federal Aviation Regulations (14 CFR 21.197 and 21.199) to operate the airplane to a location where the requirements of this AD can be accomplished.

Incorporation by Reference

(d) The actions shall be done in accordance with Boeing Service Bulletin 767–78–0085, dated November 8, 2001. This incorporation by reference was approved by the Director of the Federal Register in accordance with 5 U.S.C. 552(a) and 1 CFR part 51. Copies may be obtained from Boeing Commercial Airplane Group, P.O. Box 3707, Seattle, Washington 98124–2207. Copies may be inspected at the FAA, Transport Airplane Directorate, 1601 Lind Avenue, SW., Renton, Washington; or at the Office of the Federal Register, 800 North Capitol Street, NW., suite 700, Washington, DC.

Effective Date

(e) This amendment becomes effective on July 29, 2002.

Issued in Renton, Washington, on July 2, 2002.

Jeffrey E. Duven,

Acting Manager, Transport Airplane Directorate, Aircraft Certification Service.

[FR Doc. 02–17244 Filed 7–11–02; 8:45 am]

BILLING CODE 4910–13–P

DEPARTMENT OF TRANSPORTATION

Federal Aviation Administration

14 CFR Part 39

[Docket No. 2002–CE–12–AD; Amendment 39–12818; AD 2002–14–18]

RIN 2120–AA64

Airworthiness Directives; Glaser-Dirks Flugzeugbau GmbH Models DG–400 and DG–800A Sailplanes

AGENCY: Federal Aviation Administration, DOT.

ACTION: Final rule.

SUMMARY: This amendment adopts a new airworthiness directive (AD) that applies to all Glaser-Dirks Flugzeugbau GmbH (DG Flugzeugbau) Models DG–400 and DG–800A sailplanes. This AD requires you to inspect the rear plate of the propeller mount for marks and/or cracks and replace if necessary. This AD also requires you to inspect the mounting blocks for cracks and replace if necessary. This AD is the result of mandatory continuing airworthiness information (MCAI) issued by the airworthiness authority for Germany. The actions specified by this AD are intended to detect and correct cracks in the propeller mount plate and mounting blocks, which could result in reduced structural integrity of the propeller mounting structure. This could lead to a hazardous flight condition or loss of control of the sailplane.

DATES: This AD becomes effective on August 23, 2002.

The Director of the Federal Register approved the incorporation by reference of certain publications listed in the regulations as of August 23, 2002.

ADDRESSES: You may get the service information referenced in this AD from DG Flugzeugbau, Postbox 41 20, D–76625 Bruchsal, Federal Republic of Germany; telephone: ++49 7257–890; facsimile: ++49 72578922. You may view this information at the Federal Aviation Administration (FAA), Central Region, Office of the Regional Counsel, Attention: Rules Docket No. 2002CE–12AD, 901 Locust, Room 506, Kansas City, Missouri 64106; or at the Office of the Federal Register, 800 North Capitol Street NW., Suite 700, Washington, DC.

FOR FURTHER INFORMATION CONTACT: Mike Kiesov, Aerospace Engineer, FAA, Small Airplane Directorate, 901 Locust, Room 301, Kansas City, Missouri 64016; telephone: (816) 329–4144; facsimile: (816) 329–4090.

SUPPLEMENTARY INFORMATION:

Discussion

What Events Have Caused This AD?

The Luftfahrt-Bundesamt (LBA), which is the airworthiness authority for the Federal Republic of Germany, recently notified FAA that an unsafe condition may exist on all Model DG–400 and DG–800A sailplanes. The LBA reports that cracks have been found on the rear plate of the propeller mount on one DG–400 sailplane. The cracks were found during regular maintenance. Models DG–400 and DG–800A sailplanes are equipped with the same propeller mount structure.

What Is the Potential Impact if FAA Took No Action?

This condition, if left undetected and corrected, could result in reduced structural integrity of the propeller mounting structure. This could lead to a hazardous flight condition or loss of control of the sailplane.

Has FAA Taken Any Action to This Point?

We issued a proposal to amend part 39 of the Federal Aviation Regulations (14 CFR part 39) to include an AD that would apply to all DG Flugzeugbau Models DG–400 and DG–800A sailplanes. This proposal was published in the **Federal Register** as a notice of proposed rulemaking (NPRM) on May 20, 2002 (67 FR 35456). The NPRM proposed to require you to inspect the rear plate of the propeller mount for marks and/or cracks and replace if necessary. The NPRM also proposed to require you to inspect the mounting

blocks for cracks and replace if necessary.

Was the Public Invited To Comment?

The FAA encouraged interested persons to participate in the making of this amendment. We did not receive any comments on the proposed rule or on our determination of the cost to the public.

FAA's Determination

What Is FAA's Final Determination on This Issue?

After careful review of all available information related to the subject presented above, we have determined that air safety and the public interest require the adoption of the rule as proposed except for minor editorial corrections. We have determined that these minor corrections:

—provide the intent that was proposed in the NPRM for correcting the unsafe condition; and

—do not add any additional burden upon the public than was already proposed in the NPRM.

Cost Impact

How Many Sailplanes Does This AD Impact?

We estimate that this AD affects 43 sailplanes in the U.S. registry.

What Is the Cost Impact of This AD on Owners/Operators of the Affected Sailplanes?

We estimate the following costs to accomplish the inspection:

Labor cost	Parts cost	Total cost per sailplane	Total cost on U.S. operators
1 workhour × $60 per hour = $60	No parts required for the inspection	$60	43 × $60 = $2,580.

We estimate the following costs to accomplish any necessary replacements that will be required based on the results of the inspection. We have no way of determining the number of sailplanes that may need such replacement:

Labor cost	Parts cost	Total cost per sailplane
2 workhours × $60 per hour = $120	$400	$120 + $400 = $520.

Compliance Time of This AD

What Will Be the Compliance Time of This AD?

The compliance time of the inspection is ''within the next 25 hours time-in-service (TIS) or 3 calendar months after the effective date of this AD, whichever occurs first.''

Why Is the Compliance Time of This AD Presented in Both Hours TIS and Calendar Time?

The unsafe condition on these sailplanes is not a result of the number of times the sailplane is operated. Sailplane operation varies among operators. For example, one operator may operate the sailplane 50 hours TIS in 3 months while it may take another operator 12 months or more to accumulate 50 hours TIS. For this reason, the FAA has determined that the compliance time of this AD should be specified in both hours TIS and calendar time in order to ensure this condition is not allowed to go uncorrected over time.

Regulatory Impact

Does This AD Impact Various Entities?

The regulations adopted herein will not have a substantial direct effect on the States, on the relationship between the national government and the States, or on the distribution of power and responsibilities among the various levels of government. Therefore, it is determined that this final rule does not have federalism implications under Executive Order 13132.

Does This AD Involve a Significant Rule or Regulatory Action?

For the reasons discussed above, I certify that this action (1) is not a ''significant regulatory action'' under Executive Order 12866; (2) is not a ''significant rule'' under DOT Regulatory Policies and Procedures (44 FR 11034, February 26, 1979); and (3) will not have a significant economic impact, positive or negative, on a substantial number of small entities under the criteria of the Regulatory Flexibility Act. A copy of the final evaluation prepared for this action is contained in the Rules Docket. A copy of it may be obtained by contacting the Rules Docket at the location provided under the caption **ADDRESSES**.

List of Subjects in 14 CFR Part 39

Air transportation, Aircraft, Aviation safety, Incorporation by reference, Safety.

Adoption of the Amendment

Accordingly, under the authority delegated to me by the Administrator, the Federal Aviation Administration amends part 39 of the Federal Aviation Regulations (14 CFR part 39) as follows:

PART 39—AIRWORTHINESS DIRECTIVES

1. The authority citation for part 39 continues to read as follows:

Authority: 49 U.S.C. 106(g), 40113, 44701.

§ 39.13 [Amended]

2. FAA amends § 39.13 by adding a new AD to read as follows:

2002–14–18 Glaser-Dirks Flugzeugbau GMBH: Amendment 39–12818; Docket No. 2002–CE–12–AD.

(a) *What sailplanes are affected by this AD?* This AD affects Models DG–400 and DG–800A sailplanes, all serial numbers, that are certificated in any category.

(b) *Who must comply with this AD?* Anyone who wishes to operate any of the sailplanes identified in paragraph (a) of this AD must comply with this AD.

(c) *What problem does this AD address?* The actions specified by this AD are intended to detect and correct cracks in the propeller mount plate, which could result in reduced structural integrity of the propeller mounting structure. This could lead to a hazardous flight condition or loss of control of the sailplane.

(d) *What actions must I accomplish to address this problem?* To address this problem, you must accomplish the following:

Actions	Compliance	Procedures
(1) Accomplish the following inspections: ..... (i) Inspect the rear plate of the propeller mount for cracks and any marks made by the mounting bolt washer; and. (ii) Inspect the mounting blocks for the rear plate of the propeller mount for cracks.	Inspect within the next 25 hours time-in-service (TIS) or 3 calendar months after August 23, 2002 (the effective date of this AD), whichever occurs first.	In accordance with DG Flugzeugbau Technical Note No. 826/42, dated August 30, 2001; or DG Flugzeugbau Technical Note No. 873/25, dated August 30, 2001, as applicable, and the applicable maintenance manual.
(2) Accomplish the following if cracks and/or marks are found during the inspections required in paragraph (d)(1) of this AD:. (i) If a mark made by the mounting bolt washer is found and the mark is 0.1 mm deep or less and no cracks are found on the rear plate of the propeller mount, polish out the mark using standard maintenance practices;. (ii) If a mark made by the mounting bolt washer is found and the mark is more than 0.1 mm deep and/or cracks are found on the rear plate of the propeller mount, replace the rear plate with a new one. Use new bolts and washers as required by paragraph (d)(3) of this AD; and. (iii) If cracks are found on the mounting block(s) of the rear plate of the propeller mount, replace the mounting block(s) with a new one. Use new bolts and washers as required by paragraph (d)(3) of this Ad.	Prior to further flight after the inspections required in paragraph (d)(1) of this AD.	In accordance with DG Flugzeugbau Technical Note No. 826/42, dated August 30, 2001; or DG Flugzeugbau Technical Note No. 873/25, dated August 30, 2001, as applicable, and the applicable maintenance manual.
(3) Reinstall the rear plate of the propeller mount to the mounting blocks using new bolts, M10x25 DIN912–8.8zn with the aluminum washer S48 (or FAA-approved equivalent parts).	Prior to further flight after the inspections required in paragraph (d)(1) of this AD and/or after the replacements required in paragraph (d)(2) of this AD.	In accordance with DG Flugzeugbau Technical Note No. 826/42, dated August 30, 2001; or DG Flugzeugbau Technical Note No. 873/25, dated August 30, 2001, as applicable, and the applicable maintenance manual.
(4) Do not install any rear propeller mount plate mounting bolts that are not bolts M10x25 DIN912–8.8zn with aluminum washer S48 (or FAA-approved equivalent parts).	As of August 23, 2002 (the effective date of this AD).	Not applicable.

(e) *Can I comply with this AD in any other way?* You may use an alternative method of compliance or adjust the compliance time if:

(1) Your alternative method of compliance provides an equivalent level of safety; and

(2) The Standards Office Manager, Small Airplane Directorate, approves your alternative. Submit your request through an FAA Principal Maintenance Inspector, who may add comments and then send it to the Manager, Standards Office Manager.

Note: This AD applies to each sailplane identified in paragraph (a) of this AD, regardless of whether it has been modified, altered, or repaired in the area subject to the requirements of this AD. For sailplanes that have been modified, altered, or repaired so that the performance of the requirements of this AD is affected, the owner/operator must request approval for an alternative method of compliance in accordance with paragraph (e) of this AD. The request should include an assessment of the effect of the modification, alteration, or repair on the unsafe condition addressed by this AD; and, if you have not eliminated the unsafe condition, specific actions you propose to address it.

(f) *Where can I get information about any already-approved alternative methods of compliance?* Contact Mike Kiesov, Aerospace Engineer, FAA, Small Airplane Directorate, 901 Locust, Room 301, Kansas City, Missouri 64016; telephone: (816) 329–4144; facsimile: (816) 329–4090.

(g) *What if I need to fly the sailplane to another location to comply with this AD?* The FAA can issue a special flight permit under sections 21.197 and 21.199 of the Federal Aviation Regulations (14 CFR 21.197 and 21.199) to operate your sailplane to a location where you can accomplish the requirements of this AD.

(h) *Are any service bulletins incorporated into this AD by reference?* Actions required by this AD must be done in accordance with DG Flugzeugbau Technical Note No. 826/42, dated August 30, 2001; or DG Flugzeugbau Technical Note No. 873/25, dated August 30, 2001. The Director of the Federal Register approved this incorporation by reference under 5 U.S.C. 552(a) and 1 CFR part 51. You may get copies from DG Flugzeugbau, Postbox 41 20, D–76625 Bruchsal, Federal Republic of Germany. You may view copies at the FAA, Central Region, Office of the Regional Counsel, 901 Locust, Room 506, Kansas City, Missouri, or at the Office of the Federal Register, 800 North Capitol Street, NW, suite 700, Washington, DC.

(i) *When does this amendment become effective?* This amendment becomes effective on August 23, 2002.

Issued in Kansas City, Missouri, on July 3, 2002.

Dorenda D. Baker,

Acting Manager, Small Airplane Directorate, Aircraft Certification Service.

[FR Doc. 02–17304 Filed 7–11–02; 8:45 am]

BILLING CODE 4910–13–P

DEPARTMENT OF TRANSPORTATION

Federal Aviation Administration

14 CFR Part 97

[Docket No. 30320; Amdt. No. 3014]

Standard Instrument Approach Procedures; Miscellaneous Amendments

AGENCY: Federal Aviation Administration (FAA), DOT.

ACTION: Final rule.

SUMMARY: This amendment establishes, amends, suspends, or revokes Standard Instrument Approach Procedures (SIAPs) for operations at certain airports. These regulatory actions are

needed because of changes occurring in the National Airspace System, such as the commissioning of new navigational facilities, addition of new obstacles, or changes in air traffic requirements. These changes are designed to provide safe and efficient use of the navigable airspace and to promote safe flight operations under instrument flight rules at the affected airports.

EFFECTIVE DATE: An effective date for each SIAP is specified in the amendatory provisions.

Incorporation by reference-approved by the Director of the Federal Register on December 31, 1980, and reapproved as of January 1, 1982.

ADDRESSES: Availability of matter incorporated by reference in the amendment is as follows:

For Examination—

1. FAA Rules Docket, FAA Headquarters Building, 800 Independence Avenue, SW., Washington, DC 20591;
2. The FAA Regional Office of the region in which the affected airport is located; or
3. The Flight Inspection Area Office which originated the SIAP.

For Purchase—Individual SIAP copies may be obtained from:

1. FAA Public Inquiry Center (APA–200), FAA Headquarters Building, 800 Independence Avenue, SW., Washington, DC 20591; or
2. The FAA Regional Office of the region in which the affected airport is located.

By Subscription—Copies of all SIAPs, mailed once every 2 weeks, are for sale by the Superintendent of Documents, US Government Printing Office, Washington, DC 20402.

FOR FURTHER INFORMATION CONTACT: Donald P. Pate, Flight Procedure Standards Branch (AMCAFS–420), Flight Technologies and Programs Division, Flight Standards Service, Federal Aviation Administration, Mike Monroney Aeronautical Center, 6500 South MacArthur Blvd., Oklahoma City, OK. 73169 (Mail Address: P.O. Box 25082 Oklahoma City, OK. 73125) telephone: (405) 954–4164.

SUPPLEMENTARY INFORMATION: This amendment to part 97 of the Federal Aviation Regulations (14 CFR part 97) establishes, amends, suspends, or revokes Standard Instrument Approach Procedures (SIAPs). The complete regulatory description on each SIAP is contained in the appropriate FAA Form 8260 and the National Flight Data Center (FDC)/Permanent (P) Notices to Airmen (NOTAM) which are incorporated by reference in the amendment under 5 U.S.C. 552(a), 1 CFR part 51, and § 97.20 of the Federal Aviation's Regulations (FAR). Materials incorporated by reference are available for examination or purchase as stated above.

The large number of SIAPs, their complex nature, and the need for a special format make their verbatim publication in the **Federal Register** expensive and impractical. Further, airmen do not use the regulatory text of the SIAPs, but refer to their graphic depiction of charts printed by publishers of aeronautical materials. Thus, the advantages of incorporation by reference are realized and publication of the complete description of each SIAP contained in FAA form documents is unnecessary. The provisions of this amendment state the affected CFR (and FAR) sections, with the types and effective dates of the SIAPs. This amendment also identifies the airport, its location, the procedure identification and the amendment number.

The Rule

This amendment to part 97 of the Federal Aviation Regulations (14 CFR part 97) establishes, amends, suspends, or revokes SIAPs. For safety and timeliness of change considerations, this amendment incorporates only specific changes contained in the content of the following FDC/P NOTAMs for each SIAP. The SIAP information in some previously designated FDC/Temporary (FDC/T) NOTAMs is of such duration as to be permanent. With conversion to FDC/P NOTAMs, the respective FDC/T NOTAMs have been canceled.

The FDC/P NOTAMs for the SIAPs contained in this amendment are based on the criteria contained in the U.S. Standard for Terminal Instrument Procedures (TERPS). In developing these chart changes to SIAPs by FDC/P NOTAMs, the TERPS criteria were applied to only these specific conditions existing at the affected airports. All SIAP amendments in this rule have been previously issued by the FAA in a National Flight Data Center (FDC) Notice to Airmen (NOTAM) as an emergency action of immediate flight safety relating directly to published aeronautical charts. The circumstances which created the need for all these SIAP amendments requires making them effective in less than 30 days.

Further, the SIAPs contained in this amendment are based on the criteria contained in the TERPS. Because of the close and immediate relationship between these SIAPs and safety in air commerce, I find that notice and public procedure before adopting these SIAPs are impracticable and contrary to the public interest and, where applicable, that good cause exists for making these SIAPs effective in less than 30 days.

Conclusion

The FAA has determined that this regulation only involves an established body of technical regulations for which frequent and routine amendments are necessary to keep them operationally current. It, therefore—(1) Is not a ''significant regulatory action'' under Executive Order 12866; (2) is not a ''significant rule'' under DOT Regulatory Policies and Procedures (44 FR 11034; February 26, 1979); and (3) does not warrant preparation of a regulatory evaluation as the anticipated impact is so minimal. For the same reason, The FAA certifies that this amendment will not have a significant economic impact on a substantial number of small entities under the criteria of the Regulatory Flexibility Act.

List of Subjects in 14 CFR Part 97

Air traffic control, Airports, Navigation (air).

Issued in Washington, DC on July 5, 2002.

James J. Ballough,

Director, Flight Standards Service.

Adoption of the Amendment

Accordingly, pursuant to the authority delegated to me, part 97 of the Federal Aviation Regulations (14 CFR part 97) is amended by establishing, amending, suspending, or revoking Standard Instrument Approach Procedures, effective at 0901 UTC on the dates specified, as follows:

PART 97—STANDARD INSTRUMENT APPROACH PROCEDURES

1. The authority citation for part 97 is revised to read as follows:

Authority: 49 U.S.C. 40103, 40113, 40120, 44701; 49 U.S.C. 106(g); and 14 CFR 11.49(b)(2).

2. Part 97 is amended to read as follows:

§§ 97.23, 97.25, 97.27, 97.29, 97.31, 97.33, and 97.35 [Amended]

By amending: § 97.23 VOR, VOR/DME, VOR or TACAN, and VOR/DME or TACAN; § 97.25 LOC, LOC/DME, LDA, LDA/DME, SDF, SDF/DME; § 97.27 NDB, NDB/DME; § 97.29 ILS, ILS/DME, ISMLS, MLS/DME, MLS/RNAV; § 97.31 RADAR SIAPs; § 97.33 RNAV SIAPs; AND § 97.35 COPTER SIAPs, Identified as follows:

Effective Upon Publication

FDC date	State	City	Airport	FDC Number	Subject
06/20/02	AL	Huntsville	Madison County Executive.	2/5826	VOR/DME–B, Amdt 6.
06/20/02	AL	Troy	Troy Muni	2/5827	ILS Rwy 7, Amdt 7A.
06/20/02	AL	Huntsville	Madison County Executive.	2/5829	RNAV (GPS) Rwy 18, Orig.
06/20/02	MT	Kalispell	Glacier Park Intl	2/5847	ILS Rwy 2, Amdt 4B.
06/20/02	CT	Willimantic	Windham	2/5867	LOC Rwy 27, Amdt 2A.
06/20/02	CO	Pueblo	Pueblo Memorial	2/5873	ILS Rwy 26R, Amdt 13.
06/21/02	NC	Wilmington	Wilmington Intl	2/5908	RNAV (GPS) Rwy 35, Orig.
06/21/02	NC	Wilmington	Wilmington Intl	2/5909	RNAV (GPS) Rwy 17, Orig.
06/21/02	CO	Durango	Durango-La Plata County.	2/5910	VOR OR GPS–A, Amdt 6.
06/21/02	NC	Wilmington	Wilmington Intl	2/5917	LOC BC Rwy 17, Amdt 7B.
06/21/02	NC	Wilimington	Wilmington Intl	2/5918	Radar-1, Amdt 6B.
06/21/02	NC	Wilmington	Wilmington Intl	2/5919	TACAN–A, Orig.
06/21/02	NC	Wilmington	Wilmington Intl	2/5920	ILS Rwy 35, Amdt 20B.
06/21/02	CO	Hayden	Yampa Valley	2/6022	ILS/DME Rwy 10, Amdt 1.
06/24/02	CO	Grand Junction	Grand Junction/ Walker Field.	2/6018	LDA/DME Rwy 29, Orig.
06/25/02	CA	Oakland	Metropolitan Oakland Intl.	2/6094	RNAV (GPS) Rwy 27L, Orig.
06/25/02	NV	Las Vegas	McCarran Intl	2/6097	ILS Rwy 25R, Amdt 16F.
06/26/02	ME	Rangeley	Steven A. Bean Muni.	2/6118	NDB or GPS–A, Amdt 4. This replaces FDC 2/5693 IN TL02–15.
06/26/02	GA	Thomaston	Thomaston-Upston County.	2/6127	ILS Rwy 30, Orig.
06/26/02	GA	Thomaston	Thomaston-Upston County.	2/6128	NDB or GPS Rwy 30, Amdt 1.
06/26/02	UT	Salt Lake City	Salt Lake City Intl	2/6131	ILS Rwy 17, Amdt 12A.
06/28/02	SD	Sioux Falls	Joe Foss Field	2/6213	ILS Rwy 3, Amdt 27.
06/28/02	NH	Manchester	Manchester	2/6223	ILS Rwy 6 Orig.
07/01/02	CA	Blythe	Blythe	2/6375	VOR or GPS–A, Amdt 6A.
07/01/02	CA	Blythe	Blythe	2/6374	VOR/DME or GPS Rwy 26, Amdt 5A.
06/18/02	TX	Houston	George Bush Intercontinental Arpt/ Houston.	2/5723	ILS Rwy 15R, Orig.
06/20/02	KS	Wichita	Colonel James Jabara.	2/5876	GPS Rwy 18, Orig.
06/20/02	KS	Wichita	Colonel James Jabara.	2/5877	VOR/DME RNAV Rwy 18, Amdt 3.
06/24/02	LA	Patterson	Harry P. Williams Memorial.	2/6031	ILS Rwy 24, Orig.
06/24/02	TX	Madisonville	Madisonville Muni	2/6015	VOR/DME Rwy 18, Amdt 2.
06/25/02	OK	Lawton	Lawton-Ft Sill Regional.	2/6069	Radar-2, Amdt 1A.
06/26/02	TX	Anahuc	Chambers County	2/6133	NDB Rwy 12, Amdt 1.
07/02/02	IL	Chicago	Chicago-O'Hare Intl	2/6421	ILS Rwy 22R, Amdt 7A.

[FR Doc. 02–17582 Filed 7–11–02; 8:45 am]

BILLLING CODE 4910–13–M

SECURITIES AND EXCHANGE COMMISSION

17 CFR Part 240

[Release No. 34–46169; File No. S7–14–02]

RIN 3235–AI49

Assessments on Security Futures Transactions and Fees on Sales of Securities Resulting from Physical Settlement of Security Futures Pursuant to Section 31 of the Exchange Act

AGENCY: Securities and Exchange Commission.

ACTION: Final rule.

SUMMARY: The Securities and Exchange Commission (''Commission'') is adopting an amendment to a rule under the Securities Exchange Act of 1934 (''Exchange Act'') to clarify how to calculate assessments that are required to be paid by national securities exchanges and national securities associations pursuant to section 31(d) of the Exchange Act for security futures transactions. In addition, the amendment will provide guidance on how to calculate fees that are required to be paid by national securities exchanges and national securities associations pursuant to sections 31(b) and (c) of the Exchange Act, respectively, for sales of securities that result from the physical settlement of security futures.

EFFECTIVE DATE: August 12, 2002.

FOR FURTHER INFORMATION CONTACT: Kelly Riley, Senior Special Counsel, at (202) 942–0752, Susie Cho, Special Counsel, at (202) 942–0748, and Geoffrey Pemble, Attorney, at (202) 942–0757, Division of Market Regulation, Securities and Exchange Commission, 450 Fifth Street NW, Washington DC 20549–1001.

SUPPLEMENTARY INFORMATION:

I. Background

Section 31 of the Exchange Act [1] requires each national securities exchange and each national securities association to pay assessments and fees based on transactions in or sales of certain securities. On May 1, 2002, the Commission proposed an amendment to Rule 31–1[2] to clarify how national securities exchanges and national securities associations should calculate: (1) Assessments for security futures transactions required to be paid pursuant to section 31(d) of the Exchange Act [3] and (2) fees for sales of securities resulting from physical settlement of security futures required to be paid pursuant to either section 31(b) or (c) of the Exchange Act.[4] The Commission received four comment letters in response to the Proposing Release.[5] As discussed further below, the Commission is adopting the amendment to Rule 31–1 regarding payment of the Section 31 assessment as proposed. In addition, the Commission is adopting an amendment to Rule 31–1 regarding how Section 31 fees are to be calculated for sales of securities that result from physical settlement of security futures, which is modified from the amendment proposed in response to comments.

[1] 15 U.S.C. 78ee.

[2] 17 CFR 240.31–1.

[3] Earlier this year, the Commission exempted futures on narrow-based security indexes from the assessment and fee requirements of section 31 of the Exchange Act. *See* Securities Exchange Act Release No. 45371 (January 31, 2002), 67 FR 5199 (February 5, 2002). Accordingly, assessments under Section 31(d) of the Exchange Act are required to be paid only on transactions in futures on single securities.

[4] *See* Securities Exchange Act Release No. 45854, 67 FR 30628 (May 7, 2002) (''Proposing Release'').

[5] *See* letters to Jonathan G. Katz, Secretary, Commission, from Kathleen M. Hamm, Senior Vice President Regulation and Compliance, Nasdaq Liffe Markets, LLC, dated June 7, 2002 (''NQLX Letter''); C. Robert Paul, General Counsel, OneChicago, dated June 6, 2002 (''OneChicago Letter''); W. Leo McBlain, Chairman, Financial Information Forum, dated June 5, 2002 (''FIF Letter''); and email to Jonathan G. Katz, Secretary, Commission, from Franc Spinelli, Refco, dated May 16, 2002 (''Refco Letter'').

II. Discussion

A. Assessments Under Section 31(d) of the Exchange Act

Section 31(d) of the Exchange Act provides that each national securities exchange and each national securities association shall pay an assessment ''for each round turn transaction (treated as including one purchase and one sale of a contract of sale for future delivery) on a security future traded on such national securities exchange or by or through any member of such association otherwise than on a national securities exchange.''[6] The amendment to Rule 31–1 adopted by the Commission clarifies two issues with regard to the application of Section 31(d): (1) The meaning of ''round turn'' and (2) the unit of a ''transaction'' on which the assessment is based. These issues are discussed below.

1. Meaning of ''Round Turn''

Section 31(d) clarifies that a ''round turn'' transaction on a security future is ''treated as including one purchase and one sale'' of a contract for future delivery. The Commission believes that the correct interpretation of this phrase is a completed trade involving the simultaneous purchase and sale of a contract for future delivery by the two parties to the trade.[7] From the perspective of an exchange or association, there is, in fact, one purchase and one sale of a contract for future delivery in such a trade. Accordingly, this interpretation is consistent with the fact that it is the obligation of an exchange or association to pay an assessment on each round turn transaction.

2. Meaning of ''Transaction''

Exchanges and associations must pay Section 31(d) assessments for each ''round turn transaction (treated as including one purchase and one sale of a contract of sale for future delivery).'' The parenthetical makes clear that the assessment is applied on each purchase and sale of each *contract* for future delivery. Thus, the total Section 31 assessment an exchange or association must pay to the Commission will be the amount of the assessment—which is currently $0.009—multiplied by the number of contracts traded on such exchange or by or through a member of such association otherwise than on an exchange. The amendment to Preliminary Note to Rule 31–1 establishes this method of calculating the Section 31(d) assessment.[8]

[6] 15 U.S.C. 78ee(d). For fiscal year 2002, the assessment is $0.009 for each round turn transaction on a security future. For fiscal year 2007 and each succeeding fiscal year, such assessment shall be equal to $0.0042 for each round turn transaction.

[7] The Commission received one comment letter addressing the interpretation of the term ''round turn''; the commenter agreed with the Commission's interpretation. *See* NQLX Letter.

B. Fees under Sections 31(b) and (c) of the Exchange Act

In addition to the assessments paid by exchanges and associations pursuant to section 31(d) of the Exchange Act, section 31(b) of the Exchange Act requires each national securities exchange to pay a fee based on the aggregate dollar amount of sales of securities transacted on such exchange. Similarly, section 31(c) of the Exchange Act requires each national securities association to pay a fee based on the aggregate dollar amount of sales transacted by or through any member of such association otherwise than on a national securities exchange.[9]

1. Section 31(b) and 31(c) Fees Payable Upon Physical Settlement

Because at physical settlement of a security future a sale of the underlying security or securities occurs, each national securities exchange or national securities association is required to pay a fee to the Commission based on the dollar amount of such sale. Thus, as in the exercise of an option,[10] the fees that are required pursuant to either section 31(b) or section 31(c) of the Exchange Act are payable to the Commission only if a security future is held until settlement and settlement results in the physical delivery of the underlying security or securities. The amendment to the Preliminary Note to Rule 31–1 clarifies that the obligation to pay a Section 31(b) or (c) fee on a sale of a security underlying a physically-settled security future does not accrue until the time that physical settlement occurs.[11]

[8] The Commission received no comments on this aspect of the proposal.

[9] Sections 31(b) and (c) of the Exchange Act set forth initial rates of $15 per $1,000,000. The Commission, however, is required to make adjustments to these fee rates pursuant to section 31(j) of the Exchange Act. *See* Securities Exchange Act Release No. 45842 (April 29, 2002) (Order making fiscal 2003 annual adjustments to the fee rates applicable under section 6(b) of the Securities Act of 1933, and sections 13(e), 14(g), 31(b) and 31(c) of the Exchange Act).

[10] Section 31 fees that are paid upon an option's exercise are paid only on options that are physically-settled, not options that are cash-settled, because, upon exercise, physically-settled options result in the actual sale and delivery of the underlying securities.

[11] One commenter agreed with the Commission's interpretation by noting that, because Congress specifically excluded security futures contracts from Section 31(b) and (c) fees, the commenter believed that Congress did not intend to levy fees at the time of the formation of the contract, but rather at physical delivery of the underlying security. *See* NQLX Letter.

2. Calculation of Aggregate Dollar Amount of Sales of Securities

In the Proposing Release, the Commission proposed to amend the Preliminary Note to Rule 31–1 to clarify that the dollar amount of a sale of securities resulting from the physical settlement of a security future should be calculated based on the price at which the security future was entered into by the market participant effecting delivery of the underlying security at settlement. The Commission, however, sought comment on whether this was the appropriate price for determining the dollar amount of the sale.

All of the commenters to the Proposing Release argued that the original trade price should not be used as the benchmark for calculating fees under Sections 31(b) and (c).[12] Instead, the commenters recommended that the Commission adopt an alternative interpretation that would base the Section 31(b) and (c) fees on the final settlement price of the security futures contract. One commenter noted that its draft exchange rules define the settlement price as the price at which the securities underlying the futures contract are deliverable.[13] Several commenters further noted that the initial trade price is not the price paid by the buyer, or received by the seller, for the underlying security at expiration.[14]

The commenters further argued that using the sales price of the security future would be complicated and burdensome to implement. All of the commenters noted that neither The Options Clearing Corporation (''OCC'') nor the exchanges retain original trade price information pertaining to open positions for more than one day.[15] The commenters stated that using the sales price of the security future would require costly systems changes by market participants such as OCC because original trade price information is not readily tracked or available and would have to be obtained from the party making the delivery.[16] One of the commenters estimated that its required systems modifications would take approximately three months to complete.[17]

Finally, the commenters argued that using the initial trade price as the price upon which Section 31 fees are assessed would create verification problems.[18] Specifically, the commenters noted that because member firms are the only entities currently tracking the original transaction price, exchanges and associations that are subject to the obligation to pay the fee would not be able to verify the trade information received from the member firms.[19] One commenter argued that additional audits and reviews would have to be implemented at additional costs.[20] The commenters noted that verifying the accuracy of the information provided to a clearing organization would be impossible without extensive investigation and manual intervention involving multiple organizations.[21]

Instead, a majority of the commenters recommended that the Commission use the settlement price at expiration as the basis upon which to calculate the dollar amount of a sale of securities resulting from the physical settlement of a security future.[22] They believed that this approach would be less complicated and easier to implement because the relevant information is readily ascertainable by the exchanges and OCC, and no systems modifications would be needed for either calculation or verification of Section 31 fees.[23] Further, as noted above, two commenters noted that the settlement price is the dollar amount the buyer pays and the seller receives for delivery of the underlying security.[24]

The Commission believes that the commenters make compelling arguments as to why the Section 31(b) and (c) fees should be based on the final settlement price, rather than on the price at which the security future was entered into by the market participant effecting delivery, and has amended Rule 31–1 accordingly.

A buyer and seller enter into a futures contract at the current futures price for delivery on a specified date of an underlying asset or instrument. At the close of trading, all futures contracts open on that day are marked-to-market. The mark-to-market is a risk reduction mechanism to reduce the clearinghouse's exposure to its members. The brokers for parties with long positions pay to (or receive from) the clearing agency any decrease (or increase) in the futures contract price since the trade. Similarly, the brokers for the parties with the short positions pay to (or receive from) the clearing agency any increase (or decrease) in the futures contract price since the trade. This exchange of mark-to-market payments is referred to as variation settlement. Thus, at expiration of a futures contract, any difference between the price at which a buyer and seller may have entered into their respective positions has been bridged by the intervening mark-to-market variation settlement, *i.e.,* each party will have received (or paid) the difference between the original sale price and the final settlement price of the contract. Accordingly, physical settlement pursuant to the terms of a futures contract takes place at an invoicing price based on the final settlement price.

The amendment we are adopting to the Preliminary Note to Rule 31–1 requires that the fees paid under Sections 31(b) and (c) when physical settlement of a security future occurs be based on the price received by the seller from the buyer in exchange for delivery of the security or securities underlying such security future—*i.e.,* the final settlement price. A delivery against payment of the security or securities underlying a security future only occurs at expiration of a physically-settled contract, once the buyers electing to receive physical delivery and the sellers electing to make physical delivery have been identified. At physical delivery, the buyer pays and the seller receives the final settlement price of the underlying security. The Commission believes that this amendment specifying the price on which exchanges and associations must base Section 31(b) and (c) fees is responsive to commenters' concerns. Moreover, the Commission believes that the amount of fees collected under Sections 31(b) and (c) under this methodology will not alter the expected collection from that which would have been collected under the proposed methodology.

C. Payment of Section 31 Assessments and Fees

The obligation to pay the Section 31(d) assessment on a security futures transaction rests with national securities exchanges and national securities associations. Similarly, national securities exchanges and national securities associations have the

[12] *See* NQLX Letter; OneChicago Letter; FIF Letter; and Refco Letter.

[13] *See* NQLX Letter.

[14] *See* NQLX Letter and Refco Letter

[15] *See* NQLX Letter; OneChicago Letter; FIF Letter; and Refco Letter

[16] *Id.*

[17] *See* NQLX Letter. FIF agreed with this argument by stating that the operational and technical challenges that would result from using the initial trade price as the basis upon which the Section 31 fee calculation is made would require months of development work for multiple industry participants. *See* FIF Letter.

[18] *See* NQLX Letter; OneChicago Letter; FIF Letter; and Refco Letter.

[19] *Id.*

[20] *See* NQLX Letter.

[21] *Id.*

[22] *See* NQLX Letter; OneChicago Letter; and Refco Letter.

[23] *See* NQLX Letter and OneChicago Letter.

[24] *See supra* note 14 and accompanying text.

obligation to pay Section 31(b) and (c) fees. The amendment to the Preliminary Note to Rule 31–1 provides that OCC may pay Section 31 assessments on round turn transactions on security futures and fees for sales of securities that result from the physical settlement of security futures on behalf of national securities exchanges and national securities associations.

If a national securities exchange or national securities association chooses to levy charges upon its members to cover the Section 31(d) assessments for security futures transactions, such exchange or association would need to adopt rules requiring its members to pay such assessments.[25] In addition, national securities exchanges and national securities associations could adopt new or amend current rules to require their members to pay fees to cover the fees owed by such exchanges or associations under Section 31(b) or (c) of the Exchange Act to clarify the application of such fees to sales of securities that result from the physical settlement of security futures.[26]

III. Paperwork Reduction Act

The Paperwork Reduction Act is not applicable to the amendment because it does not impose any collection of information requirements that would require the approval of the Office of Management and Budget.

IV. Costs and Benefits of Amendment to Rule 31–1

A. Comments

In the Proposing Release, the Commission considered preliminarily the costs and benefits of the amendment to Rule 31–1 and requested comment on all aspects of its cost-benefit analysis, including identification of any additional costs or benefits of the proposed amendment to Rule 31–1. None of the commenters provided dollar-based estimates regarding the overall costs and benefits of the proposed amendment to Rule 31–1. However, several commenters discussed issues related to the costs and benefits of the proposed amendment.

Specifically, commenters raised concerns with the proposal that fees on sales of securities that result from the physical settlement of security futures be calculated based on the original sale price of the security future.[27] According to some commenters, this requirement would cause operational and technical challenges, which could result in undue costs and burdens for multiple market participants including exchanges, firms, service bureaus, and clearing organizations.[28] Several commenters noted that the futures exchanges and clearing organizations do not track initial trade price information for more than one day.[29] One commenter noted that such data would have to be obtained from the party making the delivery.[30] In addition, one commenter noted that market participants would need mechanisms to keep track of which futures transactions result in physical delivery as differentiated from those that do not.[31] Thus, a majority of the commenters suggested using the final settlement price as the basis for fee calculation.[32]

B. Costs

The amendment to Rule 31–1 is for the purpose of providing guidance on how Section 31 assessments and fees are to be calculated for transactions in security futures and sales of securities resulting from physical settlement of security futures. Specifically, the amendment is intended to clarify: (1) The method by which assessments required pursuant to section 31(d) of the Exchange Act are calculated for round turn transactions on security futures traded on national securities exchanges or by members of national securities associations; and (2) the manner in which fees required pursuant to sections 31(b) and (c) of the Exchange Act are calculated for sales of securities resulting from physical settlement of security futures.

As noted above, the Commission has modified its proposal in response to comments and is adopting an amendment to Rule 31–1 requiring that the payment of the Section 31(b) or (c) fee be based upon the price received by the seller in exchange for delivery of the security or securities underlying such security future—*i.e.,* the final settlement price. The Commission believes that this method should address the cost concerns raised by the commenters.

In addition, because the amendment to Rule 31–1 does not give rise to additional obligations on national securities exchanges, associations, or other market participants, but rather merely provides guidance on complying with existing statutory obligations, the Commission has concluded that there would be no costs imposed on market participants by the amendment to the rule.

C. Benefits

The Commission has concluded that the amendment to Rule 31–1 will benefit exchanges and associations by providing clarification on the assessments and fees payable under sections 31(b), (c) and (d) of the Exchange Act. Although these sections of the Exchange Act set forth generally the obligations of national securities exchanges and national securities associations to pay assessments and fees on security futures transactions and sales of securities resulting from physical settlement of such futures, the Commission has concluded that guidance is necessary to clarify the mechanics of the assessment and fee calculation and collection process for security futures. The Commission's guidance in the amendment to Rule 31–1 will remove any potential ambiguity in the statute about, for example, the meaning of ''round turn transaction'' and the price on which fees for sales of securities that result from the physical settlement of security futures will be based.

V. Consideration of Burden on Competition and Promotion of Efficiency, Competition, and Capital Formation

Section 23(a)(2) of the Exchange Act requires the Commission, when adopting rules under the Exchange Act, to consider the impact of such rules on competition.[33] In addition, section 3(f) of the Exchange Act requires the Commission, when engaging in rulemaking that requires it to consider or determine whether an action is necessary or appropriate in the public interest, to consider whether the action will promote efficiency, competition, and capital formation.[34]

The Commission has considered the amendment to the rule in light of these standards and has concluded that it will not impose a burden on competition that is not necessary or appropriate in furtherance of the purposes of the Exchange Act. As noted above, in amending Rule 31–1 the Commission is

[25] Currently, national securities exchanges and the National Association of Securities Dealers (''NASD'') charge their members fees to cover the fees owed by them to the Commission under sections 31(b) and (c) of the Exchange Act. *See, e.g.,* Schedule A to the NASD By-Laws, Section 8; New York Stock Exchange Rule 440H.

[26] National securities exchanges registered under section 6(g) of the Exchange Act would not be required to file such rules with the Commission. *See* Exchange Act Section 6(g)(4)(B), 15 U.S.C. 78f(g)(4)(B).

[27] *See* NQLX Letter; OneChicago Letter; FIF Letter; and Refco Letter.

[28] *See* NQLX Letter and FIF Letter.

[29] *See* NQLX Letter; OneChicago Letter; and FIF Letter.

[30] *See* OneChicago Letter.

[31] *See* FIF Letter.

[32] *See* NQLX Letter; OneChicago Letter; and Refco Letter.

[33] 15 U.S.C. 78w(a)(2).

[34] 15 U.S.C. 78c(f).

merely providing guidance in the rule to clarify recent amendments to section 31 of the Exchange Act. Likewise, the Commission has concluded that the amendment to the rule will not have an impact on capital formation. To the extent the amendment to the rule reduces any ambiguity regarding the application of Section 31 to security futures transactions and the physical settlement of security futures, the amendment to Rule 31–1 promotes efficiency.

VI. Regulatory Flexibility Act Certification

Pursuant to section 605(b) of the Regulatory Flexibility Act,[35] the Chairman of the Commission certified that the amendment to the rule would not have a significant economic impact on a substantial number of small entities. This certification was attached to the Proposing Release as Appendix A.[36] The Commission received no comments concerning the impact on small entities or the Regulatory Flexibility Act Certification.

VII. Statutory Authority

For the reasons set forth above, the Commission amends Rule 31–1 under the Exchange Act pursuant to its authority under Exchange Act Sections 3(b), 23(a), and 31.

List of Subjects in 17 CFR Part 240

Reporting and recordkeeping requirements, Securities.

Text of Final Rule

For the reasons set out in the preamble, the Commission is amending Part 240 of Chapter II, Title 17 of the Code of Federal Regulations as follows.

PART 240—GENERAL RULES AND REGULATIONS, SECURITIES EXCHANGE ACT OF 1934

1. The authority citation for part 240 continues to read in part as follows:

Authority: 15 U.S.C. 77c, 77d, 77g, 77j, 77s, 77z–2, 77z–3, 77eee, 77ggg, 77nnn, 77sss, 77ttt, 78c, 78d, 78e, 78f, 78g, 78i, 78j, 78j–1, 78k, 78k–1, 78*l*, 78m, 78n, 78o, 78p, 78q, 78s, 78u–5, 78w, 78x, 78*ll*, 78mm, 79q, 79t, 80a–20, 80a–23, 80a–29, 80a–37, 80b–3, 80b–4 and 80b–11, unless otherwise noted.

* * * * *

2. Amend § 240.31–1 by:

a. Removing the Preliminary Note;

b. Adding Preliminary Notes 1 and 2; and

c. Adding introductory text to § 240.31–1.

The additions read as follows:

[35] 5 U.S.C. 605(b).

[36] *See* Proposing Release, *supra* note 4.

§ 240.31–1 Securities transactions exempt from transaction fees.

Preliminary Notes

1. The section 31 fee for options transactions occurring on a national securities exchange, or transactions in options subject to prompt last sale reporting occurring otherwise than on an exchange (with the exception of sales of options on securities indexes) is to be paid by the exchange or the national securities association itself, respectively, or by The Options Clearing Corporation on behalf of the exchange or association, and such fee is to be computed on the basis of the option premium (market price) for the sale of the option. In the event of the exercise of an option, whether such option is traded on an exchange or otherwise, a section 31 fee is to be paid by the exchange or the national securities association itself, or The Options Clearing Corporation on behalf of the exchange or association, and such fee is to be computed on the basis of the exercise price of the option.

2. The section 31(d) assessment on a round turn transaction on a security future traded on a national securities exchange, or by or through a member of a national securities association otherwise than on a national securities exchange, is to be paid by the exchange or the national securities association itself, respectively, or by The Options Clearing Corporation on behalf of the exchange or association, and such assessment is to be computed on the basis of the number of contracts of sale for future delivery traded on such exchange or by or through any member of such association otherwise than on an exchange. In the event of the physical settlement of a security future, a section 31 fee is to be paid by the exchange on which the round turn transaction on the security future was traded, or, if the round turn transaction on the security future was traded by or through a member of a national securities association otherwise than on a national securities exchange, by the association, or by The Options Clearing Corporation on behalf of such exchange or association. Such fee, whether paid under section 31(b) or section 31(c), is to be computed on the basis of the price received by the seller in exchange for delivery of the security or securities underlying the security future. The obligation to pay fees under section 31(b) or (c) does not accrue until the time that physical delivery occurs.

The following shall be exempt from section 31 of the Act:

* * * * *

Dated: July 8, 2002.

By the Commission.

Margaret H. McFarland,

Deputy Secretary.

[FR Doc. 02–17494 Filed 7–11–02; 8:45 am]

BILLING CODE 8010–01–P

DEPARTMENT OF STATE

22 CFR Part 11

[Public Notice 4065]

RIN 1400–AB–42

Waivers of the Worldwide Availability Requirement for Foreign Service Candidates

AGENCY: Department of State.

ACTION: Final rule.

SUMMARY: This Final Rule amends the regulations on the appointment of Foreign Service Officers to allow the Director General (DG) of the Foreign Service, or the Director General's delegatee, to review the case of a Department of State Foreign Service candidate who has been denied an unlimited medical clearance for assignment worldwide to determine whether or not it is in the best interest of the Service to appoint the candidate despite the medical disqualification. This decision, as to whether or not to grant a waiver of the Foreign Service worldwide availability requirement, was previously made by a committee created solely for that purpose. The shifting of this decision to the Director General, or the Director General's delegatee, in no way alters the rights or interests of any parties, nor does it alter the substantive criteria by which a decision whether or not to waive the worldwide availability requirement will be made. As with the committee's decisions at present, the decisions of the Director General, or the Director General's delegatee, will be final and will not be subject to further appeal.

In addition, while candidates must still be medically cleared for full overseas duty, the Department of State no longer considers the medical condition of eligible family members for pre-employment purposes. References to previous practices in this regard are therefore being removed as are references to the procedures of the former United States Information Agency.

DATES: This rule is effective August 12, 2002.

FOR FURTHER INFORMATION CONTACT: Elizabeth Amory, Office of the Legal Adviser, 202–647–4646.

SUPPLEMENTARY INFORMATION: When requested and authorized by the candidate, the Director General of the Foreign Service, or the Director General's delegatee, will review the case of any Department of State Foreign Service candidate who has been denied an unlimited medical clearance for assignment worldwide and will determine whether or not it is in the best interest of the Service to appoint the candidate despite the medical disqualification. This decision, as to whether or not to grant a waiver of the Foreign Service worldwide availability requirement, was previously made by a committee established solely for that purpose. The shifting of responsibility for this decision to the Director General, or the Director General's delegatee, is being made in appreciation of the magnitude of such decisions for the Service and as part of a general effort to increase the efficiency and transparency of the Foreign Service appointment process. This change in no way alters the rights or interests of any parties nor does it alter the substantive criteria by which a decision whether or not to waive the worldwide availability requirement will be made. As with the committee's decisions, the decisions of the Director General, or the Director General's delegatee, are final and are not subject to further appeal.

In addition, while candidates must still be medically cleared for full overseas duty, the Department of State no longer considers the medical condition of eligible family members for pre-employment purposes. References in 22 CFR § 11.1 (e)(4) to previous practices in this regard are hereby removed and the citation to the Foreign Affairs Manual has been updated. It should be noted, however, that the Department still requires medical clearances for family members before they can travel overseas to accompany an employee on assignment at US Government expense. Finally, references in 22 CFR Part § 11.1(e)(5) to the procedures of the former United States Information Agency are hereby removed pursuant to the Foreign Affairs Reform and Restructuring Act of 1998.

List of Subjects in 22 CFR Part 11

Foreign Service.

As stated in the preamble, the Department of State amends 22 CFR part 11 as follows:

PART 11—APPOINTMENT OF FOREIGN SERVICE OFFICERS

1. The authority citation for part 11 is revised to read as follows:

Authority: 22 U.S.C. 3926, 3941.

2. Amend § 11.1 to revise paragraphs (e)(4) and (5) and the second sentence in paragraph (f) as follows:

§ 11.1 Junior Foreign Service officer career candidate appointments.

* * * * *

(e) * * *

(4) *Determination.* The Medical Director of the Department of State will determine, on the basis of the report of the physician(s) who conducted the medical examination, whether the candidate has met the required medical standards for appointment (see section 1930, Volume 3, Foreign Affairs Manual).

(5) *Waiver of worldwide availability requirement.* When authorized and requested by the candidate, the Director General of the Foreign Service, or the Director General's delegatee, will review the case of any Department of State Foreign Service candidate who has been denied an unlimited medical clearance for assignment worldwide, and determine whether or not the candidate should be appointed despite the medical disqualification. Decisions of the Director General of the Foreign Service, or the Director General's delegatee, are final and are not subject to further appeal by the candidate.

(f) * * * Candidates who have completed the examination process; have passed their medical examination, or have obtained a waiver from the Director General of the Foreign Service, or his or her delegatee, or the equivalent in accordance with the procedures of the other participating agencies; and on the basis of their background investigation, have been found suitable to represent the United States abroad, will have their names placed on the functional rank-order register(s), or a special register, for the agency or agencies for which they have been found qualified. * * *

* * * * *

Grant S. Green, Jr.,

Under Secretary for Management, Department of State.

[FR Doc. 02–17585 Filed 7–11–02; 8:45 am]

BILLING CODE 4710–35–P

NATIONAL INDIAN GAMING COMMISSION

25 CFR Part 580

RIN 3141–AA04

Environment, Public Health and Safety

AGENCY: National Indian Gaming Commission.

ACTION: Interpretive rule.

SUMMARY: The Indian Gaming Regulatory Act established the National Indian Gaming Commission (NIGC or Commission) as an independent federal regulatory agency responsible for federal oversight of Indian gaming. This interpretive rule explains the Commission's understanding of its oversight authority in the area of environment, public health and safety.

EFFECTIVE DATE: This rule is effective August 12, 2002.

FOR FURTHER INFORMATION CONTACT: Christine Nagle at 202–632–7003; fax 202-632–7066 (these are not toll-free numbers).

SUPPLEMENTARY INFORMATION:

Background

On October 17, 1988, Congress enacted the Indian Gaming Regulatory Act, 25 U.S.C. 2701–21 (IGRA or Act), creating the National Indian Gaming Commission (NIGC or Commission) and developing a comprehensive framework for the regulation of gaming on Indian lands to shield Indian tribes from organized crime and other corrupting influences; ensure that Indian tribes are the primary beneficiaries of gaming revenues; and assure that gaming is conducted fairly and honestly by both operators and players. To effect these goals, the Commission was granted, among other things, oversight and enforcement authority, including the authority to monitor tribal compliance with the Act, the Commission's regulations, and tribal gaming ordinances, 25 U.S.C. 2713.

A tribal government, as a condition precedent to the lawful operation of gaming activities on Indian lands, must adopt an ordinance governing gaming activities on its Indian lands, 25 U.S.C. 2710. The Act specifies a number of mandatory provisions to be contained in each tribal gaming ordinance and subjects such ordinances to agency review and the Chairman's approval. Approval by the Chairman is predicated on the inclusion of each of the specified mandatory provisions in the tribal gaming ordinance. Among these is a requirement that the ordinance must contain a provision ensuring that ''the construction and maintenance of the gaming operation, and the operation of that gaming is conducted in a manner that adequately protects the environment and the public health and safety,'' 25 U.S.C. 2710 (b)(2)(E).

The Act further extends authority to the Commission to impose sanctions, including civil fines and closure orders, if the Commission finds that gaming on Indian lands is being conducted in violation of the provisions contained in

the authorizing tribal gaming ordinance, 25 U.S.C. 2713. Thus, it is clear that Congress intended the Commission to exercise at least some degree of general oversight authority with respect to whether or not a gaming facility is being operated in compliance with the Congressionally mandated provisions in tribal gaming ordinances. Otherwise, Congress would not have extended the Commission enforcement authority in relation to compliance matters arising under ''tribal'' gaming ordinances.

Since 1993, when the Commission became operational, the Chairman has required each tribal gaming ordinance to include an express statement that gaming facilities under the control of the tribal government submitting the ordinance would be constructed, operated and maintained in a manner that adequately protects the environment, public health and safety. In 1999, the Commission undertook the development of regulations governing the method of oversight it will use in determining tribal compliance with this provision of IGRA.

The Commission recognizes that tribal governments, as an incident of inherent tribal sovereignty, have broad autonomy and authority over internal tribal affairs, including, in particular, matters pertaining to tribal lands and the health and welfare of the people and the community. Moreover, the Commission is aware that the principle of tribal self-determination is a cornerstone of federal Indian law and policy and has remained so for more than a quarter century. Accordingly, federal or other incursions upon tribal authority in such matters receive careful scrutiny by the courts. Cognizant of these facts, and bound by such federal laws and policies, the Commission approached this rulemaking effort with no small degree of caution and concern. Given the primacy of tribal regulation over the environment, public health and safety as well as federal policies regarding tribal consultation in matters directly affecting tribes, the Commission established a tribal advisory committee to assist in the development of an appropriate process through which the Commission could carry out its oversight responsibility under IGRA without improperly encroaching upon the authority of tribal government.

Tribal Advisory Committee

In November 1999, a Tribal-Commission Advisory Committee was formed to consult on the project and develop recommendations to the Commission. The Advisory Committee, was comprised of representatives of tribal governments and the Commission. It began its work in November 1999, producing a recommendation for the full Commission's consideration in May 2000. The Advisory Committee met four times to develop a regulatory proposal; an additional meeting was held after the close of the public comment period to discuss the comments that had been submitted. Upon consideration of the comments submitted, and discussions with the Tribal-Commission Advisory Committee, the Commission decided to revise and republish the proposal for additional comment.

The Advisory Committee through a consensus process produced a recommended rule for submission to the Commission. The recommendation was approved by the Commission for publication in the **Federal Register** as a proposed rule. Essentially, the regulation established a process for oversight based on tribal submissions of ''Environment, Public Health & Safety Plans'' (Plan) for review by the Commission. The Plans would then form the basis for the Commission's oversight activities. Each Plan was to contain a narrative specific to five distinct areas of concern: (1) Emergency preparedness; (2) food & water; (3) construction & maintenance; (4) hazardous and other materials; and (5) sanitation.

The approach taken by the Committee reflects an effort to balance the need for a uniform system of oversight with the need for flexibility given the widely varying circumstances and geographic dispersion of Indian gaming operations. The proposal also reflects an effort to appropriately narrow and define the Commission's role given the fact that the Commission lacks the technical expertise and the capacity to review and evaluate tribal standards or programs or to itself establish and promulgate specific technical standards appropriate to the industry. It was the view of the Committee that Congress intended a narrow role for the Commission, particularly since the Act contains no other provisions pertinent to this issue, nor does the legislative history suggest that the Commission has the responsibility to develop expansive programs relative to the environment, public health and safety. Accordingly, the Committee concluded that the Commission's role is properly confined to ensuring that tribal standards are in place in each of the five key areas identified by the Committee and ensure that such standards are enforced through an on-going process of monitoring and oversight by qualified personnel.

The purpose of the Plan was to provide the Commission with a tribe-specific description of the systems in place in order that the Commission would have a means of understanding the mechanisms specific to each tribe and tailor its oversight activities accordingly. Since tribal law and governmental structures may vary substantially as well as climate and geography, it was felt that the only way the Commission could fairly and appropriately conduct oversight is to ensure that it is based on a sound understanding of the circumstances, systems, and standards applicable to each gaming tribe.

Initial Comment Period

At the close of the initial comment period the Commission had received 127 comments, all suggesting substantial changes to the proposed rule and many challenging the Commission's authority to promulgate the rule in the first instance. The comments reflected a widespread view that the proposed rule was both burdensome and intrusive, and questioned the need for it. State and local governments requested that they be given a role in deciding what was to be included in tribal Plans.

The general thrust of the comments led the Commission to conclude that in order to reflect the general purpose and intent of the rule, revision was warranted. The Commission also perceived the need for greater clarity with regard to its view that regulatory primacy and primary responsibility for ensuring compliance with the environment, public health and safety provision rests with tribal government. The Committee was re-convened to assist the Commission to revise the proposal in such a way to make clear that the purpose of the rule is to establish an appropriate process through which the Commission may carry out its discrete and limited oversight responsibility.

Second Comment Period

Upon reviewing the comments, the Advisory Committee recommended a number of revisions to the proposed rule, but left largely intact the provisions utilizing the Plan process. The revised proposal was published in the fall of 2000, allowing for a thirty-day comment period, which was later extended through December 29, 2001. In response, the Commission again received well over a hundred comments, largely raising the same objections, with the same polarization between tribal and state governments. A number of comments, however, further developed some of the issues that had been referenced in the first round of

comments, drawing the Commission's interest.

The Commission's Oversight Role

The overwhelming majority of tribal commenters reasserted the view that the proposal was unduly burdensome and constituted an unwarranted intrusion into the governmental prerogatives of tribes so as to exceed the statutory authority delegated by the Congress in IGRA. Many commenters asserted that Congress could not have intended an extensive role for the Commission given the very limited reference to the environment, public health & safety within the Act. Moreover, the commenters pointed out, the Commission lacks appropriate expertise to properly evaluate tribal environment, public health and safety standards and practices as well as the capacity to do so. These Commenters also asserted that matters pertaining to the environment, public health and safety are more properly within the purview of other governmental agencies, both tribal and federal. It was also asserted that there was no explicit Congressional authority to impose additional enforceable burdens on tribal governments and that in doing so the Commission had run afoul of federal policies restricting the imposition of unfunded mandates in agency rulemaking.

The foregoing arguments are not without a degree of merit. In fact, these points were at the forefront of the Advisory Committee's concerns in developing its recommendation and by the Commission in its deliberations as well. While the Commission does not agree that it is without authority or responsibility altogether, it does accept Congress intended the Commission to play a limited, rather than expansive role. IGRA explicitly accords the Commission a role in ensuring compliance with the environment, public health and safety provision of IGRA. The question, therefore, is not whether the Commission has a responsibility in this regard, but rather the nature and extent of its responsibility.

The Commission does not agree that its responsibility is merely to ensure that each tribal gaming ordinance contains a rote recitation of the language set forth in 25 U.S.C. 2710 (b)(2)(E). Such interpretation would render this provision of the Act superfluous and constitute a breach of an agency's a fundamental duty to give full effect to the plain language of the Act in determining Congressional intent related thereto. Moreover, because IGRA authorizes the Commission to enforce compliance with tribal gaming ordinances and to sanction incidents of non-compliance through civil fine assessment and orders of temporary closure, it is impossible to conclude that Congress intended the Commission's role to be constrained to the degree suggested in some comments.

At the same time, the Commission recognizes that as a fundamental principle of federal law and policy, tribal governments have the right and authority to make their own choices in exercising their governmental powers. Tribal governmental powers are inherent and not derived from the federal government. As such, when a federal agency seeks to exert itself into an arena routinely controlled by tribal authority, the relevant inquiry is whether a statute, treaty or judicial decision authorizes federal activity in the particular area. Federal statutes affecting Indian affairs require broad construction when the rights of Indians are established or preserved and narrow construction when the rights of Indians are limited or abrogated.

In balancing the Commission's responsibility against the inherent rights of tribal governments the Commission has endeavored to find an objective method for meeting its oversight responsibility in a non-intrusive, non-burdensome manner respectful of tribal primacy in the environmental, public health and safety arenas. Having now had the benefit of the views and thoughts contained in nearly 300 comments, as well as opportunity for in-depth study of the issues and related federal law and policy, the Commission is of the view that the Plan process is more burdensome and intrusive than originally projected. It is further concerned that the estimation of the costs associated with the preparation of a Plan may have been underestimated. In considering the burden and financial impact the proposed rule may have had on tribal governments, the Commission recognizes that existing federal policy discourages the imposition of unfunded mandates on tribal, state, and local governments.

In the final analysis, the Commission has concluded that a simpler, less programmatic approach is warranted. This final rule represents the Commission's interpretation of its responsibility under 25 U.S.C. 2710(b)(2)(E) and provides guidance to tribal governments as to the oversight standard the Commission will apply in determining tribal compliance with this provision of the Act.

What Is the Commission's Responsibility Under Section 2710 (b)(2)(E) in the Area of Environment, Public Health and Safety?

The Commission interprets section 2710 (b)(2)(E) of IGRA to mean that the Commission has a limited and discrete responsibility to provide regulatory oversight in relation to tribal compliance with this provision. The Commission discerns nothing within the Act or the legislative history to suggest that Congress intended a more extensive role for the Commission or manifesting any intent to relieve tribal government of any measure of authority or regulatory primacy over issues concerning the environment, public health and safety in any area within the authority of the tribe or to shift, alter, or otherwise effect any transfer of responsibility from tribal government to the National Indian Gaming Commission.

What Is the Commission's Interpretation With Regard to the Duties and Responsibilities of Tribal Governments Under Section 2710(b)(2)(E) of the Act?

It is the Commission's view that section 2710 (b)(2)(E) requires tribal governments electing to conduct gaming on tribal lands to apply, adopt or issue standards designed to ensure that gaming operations on Indian lands are constructed, operated and maintained in a manner that adequately protects the environment, public health and safety, and, furthermore, to enforce compliance with such standards through an ongoing system of monitoring, conducted by qualified personnel. At a minimum, such standards must address: (1) Emergency preparedness; (2) food & water; (3) construction & maintenance; (4) hazardous and other materials; and (5) sanitation.

How Would a Tribal Government Satisfactorily Assert Its Compliance With Section 2710 (b)(2)(E) of IGRA?

The Commission recognizes that tribal governments vary dramatically in terms of size, structure, and organization. Accordingly, compliance may be effected in any number of ways. For example, departments or agencies within tribal government may issue rules or procedures, conduct inspections, and bring enforcement actions. Another tribal government may enter into intergovernmental compacts with state, local or federal government to carry out such activities while others may contract privately for such functions. In the Commission's view, the particular manner in which compliance with tribal environment,

public health and safety standards is enforced is not so important. The key objective is to confirm that standards and enforcement systems are in place.

What Action May the Commission Take if the Commission Determines That a Gaming Operation Is Not Subject to Environmental, Public Health and/or Safety Standards or That Such Standards Are Not Routinely Enforced?

If the Commission determines that a tribal government has failed to apply, adopt, issue or enforce environmental, public health and/or safety standards covering gaming operations on Indian lands, the Commission will first notify the governing body of the tribe of its concern. If the absence of standards or failure to enforce does not present imminent jeopardy to the environment, public health or safety, the Commission will refer the matter to the appropriate tribal regulatory authority for appropriate action. The Commission will proceed to enforcement only where no corrective action has been undertaken within a reasonable time and such inaction results in a condition of imminent jeopardy to the environment, public health and safety.

What is Imminent Jeopardy?

A finding of imminent jeopardy represents the standard the Commission will apply in determining that a condition poses a threat of such severity to the environment or the public health or safety as to warrant the Commission's intervention. For purposes of this regulation, imminent jeopardy exists where conditions are present that pose a real and immediate threat: (1) To the environment, which, if uncorrected, would result in actual harm to life or destruction of property; or (2) to human health and well being, which, if uncorrected, could result in serious illness or death.

Signed this 3rd day of July, 2002.

Montie R. Deer,

Chairman.

Elizabeth L. Homer,

Vice-Chair.

Teresa E. Poust,

Commissioner.

[FR Doc. 02–17151 Filed 7–11–02; 8:45 am]

BILLING CODE 7565–01–P

FEDERAL COMMUNICATIONS COMMISSION

47 CFR Part 0

[FCC 02–191]

Reorganization of the Office of Media Relations

AGENCY: Federal Communications Commission.

ACTION: Final rule.

SUMMARY: This document amends the Commission's rules to reflect the new organizational structure of the Office of Media Relations of the Federal Communications Commission, identifying their new functions.

DATES: Effective July 15, 2002.

FOR FURTHER INFORMATION CONTACT: Mary Beth Richards, Office of the Chairman, 202/418–1514 or Yvette Barrett, Office of the Managing Director, 202/418–0603.

SUPPLEMENTARY INFORMATION: This Order adopted June 26, 2002 and released July 9, 2002 by the Commission amends its rules to reflect the new structure of the Office of Media Relations to include the management of audio and visual support services for the Commission.

Authority for the adoption of the foregoing revisions is contained in sections 4(i), 4(j), 5(b), 5(c), 201(b) and 303(r) of the Communications Act of 1934, as amended, 47 U.S.C. 154(i), 154(j), 155(b), 201(b) and 303 (r).

The amendments adopted herein pertain to agency organization, procedure and practice. Consequently, the notice and comment provisions of the Administrative Procedure Act contained in 5 U.S.C. 553(b) is inapplicable.

Accordingly, *it is ordered* that part 0 of the Commission rules, set forth in Title 47 of the Code of Federal Regulations, *are amended* as set forth in the rule changes to be effective July 15, 2002.

List of Subjects in 47 CFR Part 0

Organization and functions (Government agencies), Reporting and recordkeeping requirements.

Federal Communications Commission.

Marlene H. Dortch,

Secretary.

Rule Changes

For the reasons discussed in the preamble, the Federal Communications Commission amends 47 CFR parts 0 as follows:

PART 0—COMMISSION ORGANIZATION

1. The authority citation for part 0 continues to read as follows:

Authority: Secs. 5, 48 Stat. 1068, as amended; 47 U.S.C. 155, 225, unless otherwise noted.

2. Section 0.15 is amended by adding paragraph (f) to read as follows:

§ 0.15 Functions of the Office.

* * * * *

(f) Manage the FCC's audio/visual support services and maintain liaison with outside parties regarding the broadcast of Commission proceedings.

[FR Doc. 02–17574 Filed 7–11–02; 8:45 am]

BILLING CODE 6712–01–P

DEPARTMENT OF DEFENSE

48 CFR Parts 204 and 253

[DFARS Case 2002–D010]

Defense Federal Acquisition Regulation Supplement; Reporting Requirements Update

AGENCY: Department of Defense (DoD).

ACTION: Final rule.

SUMMARY: DoD has issued a final rule amending the Defense Federal Acquisition Regulation Supplement (DFARS) to provide contract action reporting requirements for Fiscal Year 2003. The rule makes changes to the Individual Contracting Action Report and the corresponding reporting instructions.

EFFECTIVE DATE: October 1, 2002.

FOR FURTHER INFORMATION CONTACT: Ms. Susan Schneider, Defense Acquisition Regulations Council, OUSD (AT&L) DP (DAR), IMD 3C132, 3062 Defense Pentagon, Washington, DC 20301–3062. Telephone (703) 602–0326; facsimile (703) 602–0350. Please cite DFARS Case 2002–D010.

SUPPLEMENTARY INFORMATION:

A. Background

This final rule contains Fiscal Year 2003 requirements for completion of DD Form 350, Individual Contracting Action Report. DoD uses this form to collect statistical data on its contracting actions. The rule includes reporting changes related to indefinite-delivery contracts; performance-based service contracts; the SBA/OFPP pilot program for acquisition of services from small business concerns; purchases made using the Governmentwide purchase card; and purchases made by a DoD agency on behalf of another DoD or non-

DoD agency. In addition, the rule contains editorial changes to clarify instructions for completion of DD Form 350.

DD Form 350, and other forms prescribed by the DFARS, are not included in the Code of Federal Regulations. The forms are available electronically via the Internet at *http://web1.whs.osd.mil/icdhome/ddeforms.htm.*

This rule was not subject to Office of Management and Budget review under Executive Order 12866, dated September 30, 1993.

B. Regulatory Flexibility Act

This rule will not have a significant cost or administrative impact on contractors or offerors, or a significant effect beyond the internal operating procedures of DoD. Therefore, publication for public comment is not required. However, DoD will consider comments from small entities concerning the affected DFARS subparts in accordance with 5 U.S.C. 610. Such comments should cite DFARS Case 2002–D010.

C. Paperwork Reduction Act

The Paperwork Reduction Act does not apply because the rule does not impose any information collection requirements that require the approval of the Office of Management and Budget under 44 U.S.C. 3501, *et seq.*

List of Subjects in 48 CFR Parts 204 and 253

Government procurement.

Michele P. Peterson,

Executive Editor, Defense Acquisition Regulations Council.

Therefore, 48 CFR Parts 204 and 253 are amended as follows:

1. The authority citation for 48 CFR Parts 204 and 253 continues to read as follows:

Authority: 41 U.S.C. 421 and 48 CFR Chapter 1.

PART 204—ADMINISTRATIVE MATTERS

2. Section 204.670–1 is amended as follows:

a. In paragraph (b) introductory text by revising the second sentence;

b. By redesignating paragraph (c)(5) as paragraph (c)(6); and

c. By adding a new paragraph (c)(5) to read as follows:

204.670–1 Definitions.

* * * * *

(b) * * * The term does not include grants, cooperative agreements, or training authorizations. * * *

* * * * *

(c) * * *

(5) For the Defense Contract Management Agency (excluding contract administration office responsibilities in 204.670–4): Defense Contract Management Agency, ATTN: DCMA–DSP, 6350 Walker Lane, Suite 300, Alexandria, VA 22310–3226.

* * * * *

3. Section 204.670–2 is amended as follows:

a. In paragraph (a)(2)(ii) by removing ''or'';

b. By redesignating paragraph (a)(2)(iii) as paragraph (a)(2)(iv); and

c. By adding a new paragraph (a)(2)(iii) to read as follows:

204.670–2 Reportable contracting actions.

(a) * * *

(2) * * *

(iii) Multiple reports required by 204.670–6(c)(1) to separate foreign military sales (FMS) requirements from non-FMS requirements; or

* * * * *

4. Section 204.670–3 is amended in paragraph (a)(2) by revising the first sentence to read as follows:

204.670–3 Contracting office responsibilities.

(a) * * *

(2) Complete the DD Form 350 when funds are obligated or deobligated or when an indefinite-delivery contract is established with no initial obligation of funds. * * *

* * * * *

5. Section 204.670–6 is amended as follows:

a. In paragraph (b)(1)(iii), in the last sentence, by removing ''in accordance with agency procedures'';

b. In paragraph (b)(1)(iv) by revising the last sentence;

c. By revising paragraph (c)(1); and

d. In paragraph (c)(3) by removing the last sentence.

The revised text reads as follows:

204.670–6 Types of DD Form 350 reports.

* * * * *

(b) * * *

(1) * * *

(iv) * * * USACCE consolidates these transactions monthly and reports the cumulative dollar amounts and actions on one DD Form 350.

* * * * *

(c) * * *

(1) The action includes FMS requirements in addition to non-FMS requirements (Line B9 on the DD Form 350). Submit one DD Form 350 report for the FMS requirements and another DD Form 350 report for the non-FMS requirements.

* * * * *

PART 253—FORMS

6. Section 253.204–70 is revised to read as follows:

253.204–70 DD Form 350, Individual Contracting Action Report.

Policy on use of a DD Form 350 is in 204.670–2. This subsection contains instructions for completion of the DD Form 350.

(a) *Part A of the DD Form 350.* Part A identifies the report and the reporting activity. Complete all four lines.

(1) LINE A1, TYPE OF REPORT. Enter one of the following codes:

(i) *Code 0—Original.* Enter code 0 unless code 1 or code 2 applies.

(ii) *Code 1—Canceling.* A canceling action cancels an existing DD Form 350 in accordance with departmental data collection point instructions.

(iii) *Code 2—Correcting.* A correcting action corrects an existing DD Form 350 action in accordance with departmental data collection point instructions.

(2) LINE A2, REPORT NUMBER. Enter the six-position local control number (see 204.670–3(a)(5)). Do not leave blank or enter all zeros. If Line A1 is coded 1 or 2, use the prior report number rather than a new one.

(3) LINE A3, CONTRACTING OFFICE.

(i) LINE A3A, REPORTING AGENCY FIPS 95 CODE. Enter one of the following codes: 2100 (Army); 1700 (Navy); 5700 (Air Force); 96CE (Army Civil Works); 97AS (DLA); 9763 (DCMA); 9700 (all other defense agencies).

(ii) LINE A3B, CONTRACTING OFFICE CODE. Enter the code assigned by the departmental data collection point in 204.670–1(c).

(4) LINE A4, NAME OF CONTRACTING OFFICE. Enter sufficient detail to establish the identity of the contracting office.

(b) *Part B of the DD Form 350.* Part B describes the transaction.

(1) LINE B1, CONTRACT IDENTIFICATION INFORMATION.

(i) LINE B1A, CONTRACT NUMBER.

(A) Enter—

(1) The DoD contract number; or

(2) For orders under contracts awarded by other Federal agencies, the contract number of that Federal agency as it appears in the contractual instrument.

(B) Do not leave spaces between characters, and do not enter dashes, slants, or any other punctuation marks.

(C) The DoD contract number is the basic (13-position alphanumeric character) procurement instrument identification number (PIIN) that was assigned in accordance with 204.7003 or constructed under an exception permitted by 204.7000. Do not enter any supplementary procurement instrument identification numbers as part of the contract number (these go on Line B2).

(ii) LINE B1B, ORIGIN OF CONTRACT. Enter the code that indicates the agency that assigned the contract number.

(A) *Code A—DoD.*

(B) *Code B—NASA.*

(C) *Code C—Other Non-DoD Agency.*

(iii) LINE B1C, BUNDLED CONTRACT. Enter one of the following codes:

(A) *Code Y—Yes.* Enter code Y when the contract meets the definition of ''bundled contract'' at FAR 2.101 and the contract value exceeds $5 million.

(B) *Code N—No.* Enter code N when code Y does not apply.

(iv) LINE B1D, BUNDLED CONTRACT EXCEPTION. If Line B1C is coded Y, enter one of the following codes. Otherwise, leave Line B1D blank.

(A) *Code A—Mission Critical.* Enter code A if the agency has determined that the consolidation of requirements is critical to the agency's mission, but the measurably substantial benefits do not meet the thresholds set forth in FAR 7.107 to determine that the consolidation is necessary and justified.

(B) *Code B—OMB Circular A–76.* Enter code B if the agency used the OMB Circular A–76 process to determine that the consolidation of requirements is necessary and justified rather than applying the substantial benefits analysis required by FAR 7.107.

(C) *Code C—Other.* Enter code C when codes A and B do not apply.

(v) LINE B1E, PERFORMANCE-BASED SERVICE CONTRACT (see FAR Subpart 37.6). Enter one of the following codes:

(A) *Code Y—Yes.* Enter code Y when at least 80 percent of the contract value is for work that is performance based.

(B) *Code N—No.* Enter code N when code Y does not apply.

(2) LINE B2, MODIFICATION, ORDER, OR OTHER ID NUMBER. Enter the supplementary procurement instrument identification number if one was assigned in accordance with 204.7004 or as permitted by 204.7000. It can be up to 19 characters. Orders under DoD contracts have a four-position number (see 204.7004(d)); orders under non-DoD contracts have a 13-position number with an F in the ninth position; modifications to contracts and agreements have a six-position modification number (see 204.7004(c)); modifications to orders under DoD contracts have a two-position modification number following the four-position order number (see 204.7004(e)); and modifications to orders under non-DoD contracts have a six-position modification number following the 13-position order number.

(3) LINE B3, ACTION DATE.

(i) Enter the year, month, and day of the effective date for fiscal obligation purposes.

(ii) Enter four digits for the year, two digits for the month, and two digits for the day. Use 01 through 12 for January through December. For example, enter January 2, 2003, as 20030102.

(4) LINE B4, COMPLETION DATE.

(i) Enter the year, month, and day of the last contract delivery date or the end of the performance period. If the contract is incrementally funded, report the completion date for the entire contract. Report the completion date associated with an option quantity when the option is exercised.

(ii) Enter four digits for the year, two digits for the month, and two digits for the day. Use 01 through 12 for January through December. For example, enter January 2, 2003, as 20030102.

(5) LINE B5, CONTRACTOR IDENTIFICATION INFORMATION.

(i) Use data that relates to the contractor whose name and address appear in the contract document (Block 7 of the SF 26, Award/Contract; Block 8 of the SF 30, Amendment of Solicitation/Modification of Contract; Block 15A of the SF 33, Solicitation, Offer and Award; or Block 9 of the DD Form 1155, Order for Supplies or Services), except—

(A) For contracts placed with the Small Business Administration under Section 8(a) of the Small Business Act, use data that relates to the company that will be performing the work;

(B) For Federal schedule orders, use data that applies to the contractor whose name appears on the schedule (not the data for the agent to whom orders may be sent); and

(C) For contracts with the Canadian Commercial Corporation (CCC), use data for the appropriate CCC office.

(ii) Some of the parts of Line B5 may not apply to the action being reported. Follow the instructions for each part.

(A) LINE B5A, CONTRACTOR IDENTIFICATION NUMBER (DUNS).

(1) Enter the contractor's 9-position Data Universal Numbering System (DUNS) number (see FAR 4.602(d) and 4.603 and DFARS Subpart 204.73).

(2) For U.S. Army Contracting Command, Europe, consolidated reporting of vouchers for utilities from municipalities, use DUNS number 15–390–6193 (see 204.670–6(b)(1)).

(B) LINE B5B, GOVERNMENT AGENCY. Enter one of the following codes:

(1) Code Y—Yes. Enter code Y when the contractor is a Federal, State, or local government agency of the United States and outlying areas (see 204.670–1(d)). Do not use code Y when the government agency is an educational institution or a JWOD Participating Nonprofit Agency.

(2) Code N—No. Enter code N when code Y does not apply.

(C) LINE B5C. Reserved.

(D) LINE B5D, CONTRACTOR NAME AND DIVISION NAME. Enter the contractor's name as stated in the offer and resultant contract. Include its division name.

(E) LINE B5E, CONTRACTOR ADDRESS. Enter the contractor's address as stated in the offer and resultant contract. Include street address or P.O. Box, city or town, state or country, and ZIP code, if applicable. Do not enter foreign postal codes.

(F) LINE B5F, TAXPAYER IDENTIFICATION NUMBER. Enter the contractor's taxpayer identification number (TIN) (see FAR Subpart 4.9). Leave Line B5F blank if the contractor is—

(1) A nonresident alien, foreign corporation, or foreign partnership that does not have income effectively connected with the trade or business in the United States; and does not have an office or place of business or a fiscal paying agent in the United States;

(2) An agency or instrumentality of a foreign government; or

(3) An agency or instrumentality of the Federal Government.

(G) LINE B5G, PARENT TAXPAYER IDENTIFICATION NUMBER. Enter the contractor's parent company (common parent) TIN (see FAR Subpart 4.9 and 52.204–3). If the contractor does not have a parent company or the parent company meets the exemption for Line B5F, leave Line B5G blank.

(H) LINE B5H, PARENT NAME. If a parent company TIN is entered on Line B5G, enter the name of the parent company (common parent) on Line B5H. Leave Line B5H blank if there is no parent company or the parent company is exempted from the requirement to have a TIN.

(6) LINE B6, PRINCIPAL PLACE OF PERFORMANCE.

(i) The place, or places, where the contract will be performed may be specified by the Government or listed by the contractor in response to the solicitation provision at FAR 52.214–14, Place of Performance—Sealed Bidding,

or FAR 52.215–6, Place of Performance. Use data for the contractor's principal place of performance, which is generally the—

(A) Final assembly point for items manufactured under supply contracts;

(B) Location from where shipments from stock are made under supply contracts;

(C) Actual construction site for construction contracts;

(D) Planned construction site for architect-engineer contracts;

(E) Place of mining for mined supplies; or

(F) Place (including military installations) where a service is performed for service contracts.

(ii) When there is more than one location for any of paragraphs (b)(6)(i)(A) through (F) of this subsection (e.g., more than one construction site), use the location involving the largest dollar amount of the acquisition. Do not show more than one location on Line B6.

(iii) If places of performance are too varied or not known, enter the contractor's home office location. However, if the contractor is a domestic concern and the entire contract will be performed outside the United States, enter the most frequent place of performance.

(iv) Follow the instructions for each part of Line B6 that applies to the action being reported.

(A) LINE B6A, CITY OR PLACE CODE.

(1) For places in the United States and outlying areas, enter the numeric place code from FIPS PUB 55, Guideline: Codes for Named Populated Places, Primary Country Divisions, and Other Locational Entities of the United States and Outlying Areas. Leave Line B6A blank for places outside the United States and outlying areas.

(2) If the city or locality is not listed, look in FIPS PUB 55 for the county code of the principal place of performance. Enter that code on Line B6A. Use 50000 for Washington, DC, with a State code of 11.

(3) Paragraph 5.2, Entry Selection With the Aid of the Class Code, of FIPS PUB 55 will help in selecting the correct code. Sometimes, a class code should be used in addition to a place code to accurately identify the place of performance. Do not use place codes when the first position of the class code is X or Z.

(B) LINE B6B, STATE OR COUNTRY CODE.

(1) For places in the United States and outlying areas, enter the numeric State code from FIPS PUB 55 or FIPS PUB 5, Codes for the Identification of the States, the District of Columbia and the Outlying Areas of the United States and Associated Areas.

(2) For places outside the United States and outlying areas, enter the alpha country code from FIPS PUB 10, Countries, Dependencies, Areas of Special Sovereignty, and Their Principal Administrative Divisions.

(C) LINE B6C, CITY OR PLACE AND STATE OR COUNTRY NAME. Enter the name of the principal place of performance. Do not leave Line B6C blank.

(7) LINE B7, TYPE OBLIGATION. Enter one of the following codes:

(i) *Code 1—Obligation.* Enter code 1 if the action obligates funds.

(ii) *Code 2—Deobligation.* Enter code 2 if the action deobligates funds.

(iii) *Code 3—No Dollars Obligated or Deobligated.* Enter code 3 if the action is the initial award of an indefinite-delivery contract that neither obligates nor deobligates funds.

(8) LINE B8, OBLIGATED OR DEOBLIGATED DOLLARS. Enter the net amount of funds (whole dollars only) obligated or deobligated by the action. Enter zero if the action is the initial award of an indefinite-delivery contract that neither obligates nor deobligates funds, i.e., Line B7 is coded 3.

(9) LINE B9, FOREIGN MILITARY SALE. Enter one of the following codes. If only part of the action is a foreign military sale, separately report the parts (see 204.670–6(c)).

(i) *Code Y—Yes.* Enter code Y when the action is under a foreign military sales arrangement, or under any other arrangement when a foreign country or international organization is bearing the cost of the acquisition.

(ii) *Code N—No.* Enter code N when code Y does not apply.

(10) LINE B10, MULTIYEAR CONTRACT. Enter one of the following codes:

(i) *Code Y—Yes.* Enter code Y when the action is a multiyear contract as defined at FAR 17.103. Do not report contracts containing options as multiyear unless the definition at FAR 17.103 applies to the contract.

(ii) *Code N—No.* Enter code N when code Y does not apply.

(11) LINE B11, TOTAL ESTIMATED CONTRACT VALUE. Enter the total estimated contract value (in whole dollars) only at the time of initial placement of the contract, including placement of an indefinite-delivery or multiyear contract. Include the total estimated value of orders and options anticipated to be placed over the life of the contract.

(12) LINE B12, PRINCIPAL PRODUCT OR SERVICE. Line B12 has five parts. Do not leave any parts of Line B12 blank. Codes for Line B12 can be found in the DoD Procurement Coding Manual (MN02) under ''PRODUCT AND SERVICE CODE ASCII FILE DOWNLOADS'' at the bottom of the following web page: *http://web1.whs.osd.mil/peidhome/guide/mn02/mn02.htm.*

(i) LINE B12A, FEDERAL SUPPLY CLASS OR SERVICE CODE. Enter the 4-character Federal supply class (FSC) or service code that describes the contract effort. There are three categories of codes to choose from. If more than one category or code applies to the action, enter the one that best identifies the product or service representing the largest dollar value.

(A) *Supplies.* If the action is for the purchase (not lease or rental) of supplies, enter an FSC code on Line B12A. FSC codes are all numeric. The Department of Defense Federal Supply Classification Cataloging Handbook (H2) may also help with the correct 4-digit code.

(B) *Services.* If the action is for services (except research, development, test, and evaluation), construction, equipment lease or rental, or facilities lease or rental, enter a service code on Line B12A.

(C) *Research, Development, Test, and Evaluation (RDT&E).* If the action is for RDT&E (as defined in FAR 35.001 and 235.001), enter an RDT&E code on Line B12A. All RDT&E codes should begin with the letter ''A.'' Do not use an RDT&E code for—

(1) Purchase, lease, or rental of equipment, supplies, or services separately purchased in support of RDT&E work, even if RDT&E funds are cited. Instead, use an FSC or Service code under the instructions in paragraph (b)(12)(i)(A) or (B) of this subsection; or

(2) Orders under Federal schedule contracts. Instead, use an FSC or Service code under the instructions in paragraph (b)(12)(i)(A) or (B) of this subsection.

(ii) LINE B12B, DOD CLAIMANT PROGRAM CODE. Enter a code that identifies the commodity described on Line B12E. If more than one code applies to the action, enter the one that best identifies the product or service representing the largest dollar value. If the description on Line B12E is for—

(A) Research and development (R&D), enter the code that best represents the objective of the R&D. For example, if the objective of the R&D is a guided missile, enter code A20. If the R&D cannot be

identified to any particular objective, enter code S10;

(B) Ship repair, inspect and repair as necessary (IRAN), modification of aircraft, overhaul of engines, or similar maintenance, repair, or modification services, enter the code that best identifies the program;

(C) Equipment rental (including rental of automatic data processing equipment), enter code S10;

(D) Utility services, enter code S10;

(E) Services that cannot be identified to any listed program, enter code S10; or

(F) Supplies or equipment that cannot be identified to any listed program, enter code C9E.

(iii) LINE B12C, PROGRAM, SYSTEM, OR EQUIPMENT CODE.

(A) Enter a code that describes the program, weapons system, or equipment. If there is no code that applies to the action, enter three zeros. If more than one code applies to the action, enter the one that best identifies the product or service representing the largest dollar value.

(B) If the action is funded by the Ballistic Missile Defense Organization, enter code CAA.

(C) If the action supports environmental cleanup programs, enter one of the codes listed in Section II of the DoD Procurement Coding Manual (MN02) under the heading ''Environmental Cleanup Programs'' at *http://web1.whs.osd.mil/peidhome/guide/mn02/SECT2.HTM.*

(D) Defense Logistics Agency and Defense Contract Management Agency activities must use the code assigned by the sponsoring military department.

(iv) LINE B12D, NAICS CODE. Enter the North American Industry Classification System (NAICS) code for the acquisition. Use the NAICS code in effect at the time of award. These codes are in the 2002 U.S. NAICS Manual (*http://www.census.gov/pub/epcd/www/naics.html*). If more than one code applies to the action, enter the code that best identifies the product or service representing the largest dollar value.

(v) LINE B12E, NAME OR DESCRIPTION. Enter the name or a brief description of the commodity or service. If the description is classified, enter only the word ''Classified.'' Do not use ''Classified'' when a code name (e.g., Minuteman, Polaris, Trident, Pershing) or an identifying program number (e.g., WS–107A) can be used.

(vi) LINE B12F, EPA-DESIGNATED PRODUCT(S). Enter one of the following codes:

(A) Code A—EPA-Designated Product(s) with Minimum Recovered Material Content. Enter code A if Environmental Protection Agency (EPA)-designated product(s) were acquired and all contained the required minimum recovered material content. See the EPA Comprehensive Procurement Guidelines program list at *http://www.epa.gov/cpg/.*

(B) Code B—FAR 23.405(c)(1) Justification. Enter code B if EPA-designated product(s) were acquired without the required minimum recovered material content and a justification was completed based on inability to acquire the product(s) competitively within a reasonable period of time.

(C) Code C—FAR 23.405(c)(2) Justification. Enter code C if EPA-designated product(s) were acquired without the required minimum recovered material content and a justification was completed based on inability to acquire the product(s) at a reasonable price.

(D) Code D—FAR 23.405(c)(3) Justification. Enter code D if EPA-designated product(s) were acquired without the required minimum recovered material content and a justification was completed based on inability to acquire the product(s) to reasonable performance standards in the specifications.

(E) Code E—No EPA-Designated Products Acquired. Enter code E if no EPA-designated products were acquired.

(vii) LINE B12G, RECOVERED MATERIAL CLAUSES. If an EPA-designated product was acquired, *i.e.,* Line B12F is coded A, B, C, or D, enter one of the following codes. Otherwise, leave Line B12G blank.

(A) Code A—FAR 52.223–4. Enter code A if the solicitation included the provision at FAR 52.223–4, Recovered Material Certification.

(B) Code B—FAR 52.223–4 and FAR 52.223–9. Enter code B if the solicitation included the provision at FAR 52.223–4, Recovered Material Certification, and the contract includes the clause at FAR 52.223–9, Estimate of Percentage of Recovered Material Content for EPA-Designated Products.

(13) LINE B13, KIND OF ACTION. Some of the parts of Line B13 may not apply to the action being reported. Follow instructions for each part. When the action is a modification, complete Lines B13A and B13D.

(i) LINE B13A, CONTRACT OR ORDER. Enter one of the following codes:

(A) *Code 1—Letter Contract.* Enter code 1 when the action is a letter contract or a modification to a letter contract that has not been definitized.

(B) *Code 3—Definitive Contract.*

(1) Enter code 3 when the action is the award or modification of a definitive contract or a modification that definitizes a contract. Code 3 includes the following:

(i) Definitive contract awards under the Small Business Administration 8(a) program.

(ii) Notices of award.

(iii) Lease agreements.

(iv) Indefinite-delivery-definite-quantity contracts (FAR 52.216–20).

(v) Indefinite-delivery-indefinite-quantity contracts (FAR 52.216–22) when funds are obligated by the contract itself.

(vi) Initial award of an indefinite-delivery contract when no funds are obligated.

(2) Code 3 excludes orders from the Procurement List (see codes 6 and 8).

(C) *Code 4—Order under an Agreement.* Enter code 4 when the action is an order or definitization of an order under an agreement other than a blanket purchase agreement. Examples include an order exceeding $25,000 under a basic ordering agreement or a master ship repair agreement and a job order when the contract is created by issuing the order. An order under a blanket purchase agreement established under a Federal schedule (see FAR 8.404(b)(4)) is coded 7. An order under other blanket purchase agreements, pursuant to FAR 13.303, is coded 9. When the action is a modification to an order described in code 4 instructions, enter code 4 on Line B13A.

(D) *Code 5—Order under Indefinite-Delivery Contract.* Enter code 5 when the action is an order, including a task or delivery order, under an indefinite-delivery contract awarded by a Federal agency. For example, enter code 5 for an order under a GSA indefinite-delivery contract, such as a GSA area-wide contract for utility services, that is not a Federal schedule. When the action is a modification to an order described in code 5 instructions, enter code 5 on Line B13A.

(E) *Code 6—Order under Federal Schedule.* Enter code 6 if the action is an order under a Federal schedule. An order under a blanket purchase agreement established under a Federal schedule is coded 7. Code 6 includes orders under Federal schedules for items on the Procurement List. When the action is a modification to an order described in code 6 instructions, enter code 6 on Line B13A.

(F) *Code 7—BPA Order under Federal Schedule.* Enter code 7 if the action is an order under a blanket purchase agreement established under a Federal schedule (see FAR 8.404(b)(4)). When the action is a modification to an order

described in code 7 instructions, enter code 7 on Line B13A.

(G) *Code 8—Order from UNICOR or JWOD.* Enter code 8 if the action is an order placed with Federal Prison Industries (UNICOR) or a JWOD Participating Nonprofit Agency in accordance with FAR Subpart 8.6 or 8.7. Use code 6 for orders from the Procurement List under Federal schedules. When the action is a modification to an order described in code 8 instructions, enter code 8 on Line B13A.

(H) *Code 9—Award under FAR Part 13.* Enter code 9 if the action, including an action in a designated industry group under the Small Business Competitiveness Demonstration Program (see FAR Subpart 19.10), is an award pursuant to FAR Part 13, except when the action is a blanket purchase agreement order pursuant to FAR 8.404(b)(4) (see code 7). When the action is a modification to an award described in code 9 instructions, enter code 9 on Line B13A.

(ii) LINE B13B, TYPE OF INDEFINITE-DELIVERY CONTRACT. If the action is the award or modification of an indefinite-delivery contract, i.e., Line B13A is coded 3 and the ninth position of B1A is coded D, complete Line B13B. If the action is an order or modification of an order under an indefinite-delivery contract, i.e., Line B13A is coded 5, complete Line B13B. Otherwise, leave Line B13B blank.

(A) *Code A—Requirements Contract (FAR 52.216–21).*

(B) *Code B—Indefinite-Quantity Contract (FAR 52.216–22).*

(C) *Code C—Definite-Quantity Contract (FAR 52.216–20).*

(iii) LINE B13C, MULTIPLE OR SINGLE AWARD INDEFINITE-DELIVERY CONTRACT. If the action is the award or modification of an indefinite-delivery contract, or an order or modification of an order under an indefinite-delivery contract, i.e., Line B13B is coded A, B, or C, complete Line B13C. Otherwise, leave Line B13C blank.

(A) *Code M—Multiple Award.* Enter code M if the indefinite-delivery contract is a multiple award contract.

(B) *Code S—Single Award.* Enter code S if the indefinite-delivery contract is a single award contract.

(iv) LINE B13D, MODIFICATION. If the action is a modification, enter one of the following codes. Otherwise, leave Line B13D blank.

(A) *Code A—Additional Work (new agreement).* Enter code A when the action is a bilateral supplemental agreement that obligates funds for additional work requiring a justification and approval (J&A).

(B) *Code B—Additional Work (other).* Enter code B when the action is a modification of an existing contract (including a letter contract) that is not covered by code A or by codes C through H (see code H for exercise of an option). Code B includes actions that—

(*1*) Initiate an incremental yearly buy under a multiyear contract;

(*2*) Amend a letter or other contract to add work that does not require a J&A; or

(*3*) Order under a priced exhibit or production list.

(C) *Code C—Funding Action.* Enter code C when the action is a modification (to a letter or other contract) for the sole purpose of obligating or deobligating funds. This includes—

(*1*) Incremental funding (other than incremental yearly buys under multiyear contracts, which are coded B);

(*2*) Changes to the estimated cost on cost-reimbursement contracts;

(*3*) Repricing actions covering incentive price revisions;

(*4*) Economic price adjustments; and

(*5*) Initial citation and obligation of funds for a contract awarded in one fiscal year but not effective until a subsequent fiscal year.

(D) *Code D—Change Order.* Enter code D if the action is a change order issued under the ''Changes,'' ''Differing Site Conditions,'' or similar clauses in existing contracts.

(E) *Code E—Termination for Default.* Enter code E if the action is a modification that terminates all or part of the contract for default.

(F) *Code F—Termination for Convenience.* Enter code F if the action is a modification that terminates all or part of the contract for convenience.

(G) *Code G—Cancellation.* Enter code G if the action is a modification that cancels the contract. Do not use code G to cancel a prior DD Form 350 (see Line A1).

(H) *Code H—Exercise of an Option.* Enter code H if the action is an exercise of an option.

(I) *Code J—Definitization.* Enter code J if the action is a definitization modification. For the definitization of a letter contract, enter code 3 on Line B13A.

(v) LINE B13E, MULTIPLE AWARD CONTRACT FAIR OPPORTUNITY. If the action is an order under a multiple award indefinite-delivery contract, i.e., Line B13C is coded M, enter one of the following codes. Otherwise, leave Line B13E blank.

(A) *Code A—Fair Opportunity Process.* Enter code A if the delivery or task order was issued pursuant to a process that permitted each contract awardee a fair opportunity to be considered (see FAR 16.505(b)(1)).

(B) *Code B—Urgency.* Enter code B if the agency need is so urgent that providing a fair opportunity would result in unacceptable delays (see FAR 16.505(b)(2)(i)).

(C) *Code C—One/Unique Source.* Enter code C if only one contract awardee is capable of providing the supplies or services at the level or quality required because the supplies or services are unique or highly specialized (see FAR 16.505(b)(2)(ii)).

(D) *Code D—Follow-On Contract.* Enter code D if the order was issued on a sole-source basis in the interest of economy and efficiency as a logical follow-on to an order already issued under the contract, provided that all awardees were given a fair opportunity to be considered for the original order (see FAR 16.505(b)(2)(iii)).

(E) *Code E—Minimum Guarantee.* Enter code E if it was necessary to place an order to satisfy a minimum amount guaranteed to the contractor (see FAR 16.505(b)(2)(iv)).

(vi) LINE B13F, INDEFINITE-DELIVERY CONTRACT USE. If the action is the initial award of an indefinite-delivery contract, enter one of the following codes to indicate if the indefinite-delivery contract can be used Government-wide, within DoD only, within the department or agency only, or by the contracting office only. Otherwise, leave Line B13F blank.

(A) *Code A—Government-Wide.*

(B) *Code B—DoD-Wide.*

(C) *Code C—DoD Department or Agency Only.*

(D) *Code D—Contracting Office Only.*

(vii) LINE B13G—INDEFINITE-DELIVERY CONTRACT ORDERING PERIOD ENDING DATE. If the action is the initial award of an indefinite-delivery contract and Line B13F is coded A, B, C, or D, enter the date the ordering period ends. Otherwise, leave Line B13G blank. Enter four digits for the year, two digits for the month, and two digits for the day. Use 01 through 12 for January through December. For example, enter January 2, 2003, as 20030102.

(14) LINE B14, CICA APPLICABILITY. Enter one of the following codes:

(i) *Code A—Pre-CICA.* Enter code A if the action resulted from a solicitation issued before April 1, 1985. Modifications within the original scope of work of such awards and orders under pre-CICA indefinite-delivery type contracts also are coded A.

(ii) *Code B—CICA Applicable.* Enter code B if—

(A) The action resulted from a solicitation issued on or after April 1, 1985, or is a modification coded A on Line B13D issued on or after April 1, 1985; and

(B) Neither code C nor code D applies.

(iii) *Code C—Simplified Acquisition Procedures Other than FAR Subpart 13.5.* Enter code C if the action resulted from use of the procedures in FAR Part 13, including blanket purchase agreement orders with Federal schedule contractors, other than those in Subpart 13.5.

(iv) *Code D—Simplified Acquisition Procedures Pursuant to FAR Subpart 13.5.* Enter code D if the action resulted from use of the procedures in FAR Subpart 13.5.

(15) LINE B15, INFORMATION TECHNOLOGY PRODUCTS OR SERVICES. If the action is for information technology products or services, enter one of the following codes. Otherwise, leave Line B15 blank.

(i) *Code A—Commercially Available Off-the-Shelf Item.* Enter code A if the action is for an item of supply that meets the definition of commercial item in FAR 2.101, does not require any modification, and is available in the commercial marketplace.

(ii) *Code B—Other Commercial Item of Supply.* Enter code B if the action is for an item of supply that meets the definition of commercial item in FAR 2.101, but requires minor modifications, or is not yet available in the commercial marketplace, but will be available in time to meet the Government's needs.

(iii) *Code C—Nondevelopmental Item Other than Commercial Item.* Enter code C if the action is for an item of supply, other than a commercial item, that meets the definition of nondevelopmental item in FAR 2.101.

(iv) *Code D—Other Noncommercial Item of Supply.* Enter code D if the action is for an item of supply that does not meet the definition of commercial item or nondevelopmental item in FAR 2.101.

(v) *Code E—Commercial Service.* Enter code E if the action is for a service that meets the definition of commercial item in FAR 2.101.

(vi) *Code F—Noncommercial Service.* Enter code F for all other services.

(16) LINE B16, CLINGER-COHEN ACT PLANNING COMPLIANCE. If the action is for information technology products or services, enter one of the following codes. Otherwise, leave Line B16 blank:

(i) *Code Y—Yes.* Enter code Y if the action is for information technology products or services acquired in compliance with the planning requirements of sections 5122 and 5123 of the Clinger-Cohen Act of 1996 (40 U.S.C. 1422 and 1423).

(ii) *Code N—No.* Enter code N if code Y does not apply.

(c) *Part C of the DD Form 350.*

(1) Part C gathers data concerning contracting procedures, use of competition, financing, and statutory requirements other than socioeconomic (which are in Part D).

(2) Do not complete Part C if the action is with a government agency, *i.e.*, Line B5B (Government Agency) is coded Y (Yes). If the action is an order under a Federal schedule, *i.e.*, Line B13A is coded 6, complete only the following lines in Part C: Line C3, and Lines C13A and C13B (when applicable).

(3) In completing Part C, use codes that describe either the current action or the original contract as follows:

(i)(A) If the current action is a modification, other than a new work modification, or an order under an indefinite-delivery contract, code the lines in Part C to describe the original contract.

(B) If the current action is an order under a multiple award contract, *i.e.*, Line B13A is coded 5 and Line B13C is coded M, code Lines C6 and C7 to describe the order and code the rest of Part C to describe the original contract.

(C) Otherwise, code the lines in Part C to describe the current action.

(ii) If there are no codes for the original contract because a DD Form 350 was not required at the time, the original action is no longer available, the definition of the original code has changed, or a data element has been added to the system after the original contract report, use codes that best describe the original action.

(4) Complete Part C as follows:

(i) LINE C1, SYNOPSIS. Enter one of the following codes:

(A) *Code A—Synopsis Only.* Enter code A only if a synopsis of the proposed action was prepared and transmitted in accordance with FAR Subpart 5.2.

(B) *Code B—Combined Synopsis/Solicitation.* Enter code B if a combined synopsis/solicitation of the proposed action was prepared and transmitted in accordance with FAR Subpart 5.2 and 12.603.

(C) *Code N—Not Synopsized.* Enter code N if a synopsis was not prepared.

(ii) LINE C2, REASON NOT SYNOPSIZED. Enter one of the following codes if a synopsis was not prepared, *i.e.*, Line C1 is coded N. Otherwise, leave Line C2 blank.

(A) *Code A—Urgency.* Enter code A if the action was not synopsized due to urgency (see FAR 6.302–2).

(B) *Code B—FAR 5.202(a)(13).* Enter code B if the action was not synopsized because the acquisition did not exceed the simplified acquisition threshold and was made through FACNET or another means that provided access to the notice of proposed action through the single, Governmentwide point of entry (see FAR 5.202(a)(13)).

(C) *Code C—SBA/OFPP Pilot Program.* Enter Code C if the action was not synopsized because the acquisition was subject to the SBA/OFPP Pilot Program that allows for waiver of synopsis requirements for acquisitions of services between $25,000 and $100,000 from small businesses under set-asides (OFPP memorandum dated September 27, 2001, Subject: Extension of the Pilot Program on Acquisition of Services from Small Businesses). Do not use Code C if the acquisition is subject to the Small Business Competitiveness Demonstration Program.

(D) *Code Z—Other Reason.* Enter code Z if the action was not synopsized due to some other reason.

(iii) LINE C3, EXTENT COMPETED. Enter one of the following codes:

(A) *Code A—Competed Action.* Enter code A when—

(1) The action is an order under a Federal schedule, *i.e.*, Line B13A is coded 6;

(2) Competitive procedures were used to fulfill the requirement for full and open competition (see FAR Subpart 6.1);

(3) Full and open competition procedures after exclusion of sources were used in order to establish or maintain alternative sources, to set aside an acquisition for small business or HUBZone small business, or to compete Section 8(a) awards (see FAR Subpart 6.2);

(4) Statutory authorities for other than full and open competition were used (see FAR Subpart 6.3) and more than one offer was received (if only one offer was received, use code D);

(5) The action resulted from a contract awarded prior to the Competition in Contracting Act that used two-step sealed bidding or other sealed bidding, or that was negotiated competitively; or

(6) Simplified acquisition procedures were used and competition was obtained.

(B) *Code B—Not Available for Competition.* Enter code B for—

(1) Awards for utilities or utility systems, excluding long distance telecommunications services, when only one supplier can furnish the service (see FAR 6.302–1(b)(3));

(2) Brand name commercial products for authorized resale;

(3) Acquisitions authorized or required by statute to be awarded to a

specific source pursuant to FAR 6.302–5(b)(2) or (4), e.g., qualified nonprofit agencies employing people who are blind or severely disabled (see FAR Subpart 8.7) or 8(a) program (see FAR Subpart 19.8);

(4) International agreements and Foreign Military Sales when the acquisition is to be reimbursed by a foreign country that requires that the product or services be obtained from a particular firm as specified in official written direction such as a Letter of Offer and Acceptance; and

(5) Other contracting actions when the Director of Defense Procurement has determined that there is no opportunity for competition.

Note: Even though Part C is not completed for actions with a government agency, the database will automatically include these actions in the category of not available for competition.

(C) *Code C—Follow-On to Competed Action.* Enter code C when the action pertains to an acquisition placed with a particular contractor to continue or augment a specific competed program, if such placement was necessitated by prior acquisition decisions. Code C applies to contracts that meet the statutory criteria for Phase III follow-on under the Small Business Innovation Research Program.

(D) *Code D—Not Competed.* Enter code D when codes A, B, and C do not apply.

(iv) LINE C4, SEA TRANSPORTATION. When the origin of the contract is DoD, i.e., Line B1B is coded A, enter one of the following codes. Otherwise, leave Line C4 blank.

(A) *Code Y—Yes—Positive Response to DFARS 252.247–7022 or 252.212–7000(c)(2).* Enter code Y when the contractor's response to the provision at 252.247–7022, Representation of Extent of Transportation by Sea, or 252.212–7000(c)(2), Offeror Representations and Certifications—Commercial Items, indicates that the contractor anticipates that some of the supplies being provided may be transported by sea.

(B) *Code N—No—Negative Response to DFARS 252.247–7022 or 252.212–7000(c)(2).* Enter code N when the contractor's response to the provision at 252.247–7022 or 252.212–7000(c)(2) indicates that the contractor anticipates that none of the supplies being provided will be transported by sea.

(C) *Code U—Unknown—No Response or Provision Not Included in Solicitation.* Enter code U when the contractor did not complete the representation at 252.247–7022 or 252.212–7000(c)(2) or the solicitation did not include either provision.

(v) LINE C5, TYPE OF CONTRACT.

(A) If the action is a letter contract, including modifications and amendments to letter contracts, enter the code that describes the anticipated type of contract the letter contract will become when it is definitized.

(B) If there is more than one type of contract involved in the action, enter the code that matches the type with the most dollars. If the type with the least dollars exceeds $500,000, fill out separate DD Forms 350 (with different report numbers) for each type.

(C) Enter one of the following codes:

(1) Code A—Fixed-Price Redetermination.

(2) Code J—Firm-Fixed-Price.

(3) Code K—Fixed-Price Economic Price Adjustment.

(4) Code L—Fixed-Price Incentive.

(5) Code M—Fixed-Price-Award-Fee.

(6) Code R—Cost-Plus-Award-Fee.

(7) Code S—Cost Contract.

(8) Code T—Cost-Sharing.

(9) Code U—Cost-Plus-Fixed-Fee.

(10) Code V—Cost-Plus-Incentive-Fee.

(11) Code Y—Time-and-Materials.

(12) Code Z—Labor-Hour.

(vi) LINE C6, NUMBER OF OFFERORS SOLICITED.

(A) Leave Line C6 blank if—

(1) The original contract resulted from a solicitation issued before April 1, 1985 (*i.e.*, before the effective date of the Competition in Contracting Act);

(2) The action is an order or modification of an order under a non-DoD indefinite-delivery contract, *i.e.*, Line B1B is coded B or C and Line B13A is coded 5; or

(3) The action is an order or modification of an order under a Federal schedule, *i.e.*, Line B13A is coded 6.

(B) Otherwise, enter—

(1) Code 1—One. Enter code 1 if only one offeror was solicited; or

(2) Code 2—More than One. Enter code 2 if more than one offeror was solicited.

(vii) LINE C7, NUMBER OF OFFERS RECEIVED.

(A) Leave Line C7 blank if—

(1) The original contract resulted from a solicitation issued before April 1, 1985 (*i.e.*, before the effective date of the Competition in Contracting Act); or

(2) The action is an order under a Federal schedule, *i.e.*, Line B13A is coded 6.

(B) Otherwise, enter the specific number of offers received (001–999).

(viii) LINE C8, SOLICITATION PROCEDURES.

(A) Leave Line C8 blank if—

(1) The original contract resulted from a solicitation issued before April 1, 1985 (*i.e.*, before the effective date of the Competition in Contracting Act);

(2) The action is pursuant to simplified acquisition procedures, *i.e.*, Line B13A is coded 9; or

(3) The action is an order under a Federal schedule, *i.e.*, Line B13A is coded 6.

(B) Otherwise, enter one of the following codes:

(1) Code A—Full and Open Competition—Sealed Bid. Enter code A if the action resulted from an award pursuant to FAR 6.102(a).

(2) Code B—Full and Open Competition—Competitive Proposal. Enter code B if the action resulted from an award pursuant to FAR 6.102(b).

(3) *Code C—Full and Open Competition—Combination.* Enter code C if the action resulted from an award using a combination of competitive procedures (e.g., two-step sealed bidding) pursuant to FAR 6.102(c).

(4) Code D—Architect-Engineer. Enter code D if the action resulted from selection of sources for architect-engineer contracts pursuant to FAR 6.102(d)(1).

(5) Code E—Basic Research. Enter code E if the action resulted from competitive selection of basic research proposals pursuant to FAR 6.102(d)(2).

(6) Code F—Multiple Award Schedule. Enter code F if the action is an award of a multiple award schedule pursuant to FAR 6.102(d)(3) or an order against such a schedule.

(7) Code G—Alternative Sources. Enter code G if the action resulted from use of competitive procedures but excluded a particular source pursuant to FAR 6.202(a).

(8) Code K—Set-Aside. Enter code K if the action resulted from any—

(i) Set-aside for small business concerns (see FAR Subpart 19.5), including small business innovation research (SBIR) actions;

(ii) Set-aside for small disadvantaged business concerns;

(iii) Set-aside for HUBZone small business concerns (see FAR 19.1305);

(iv) Set-aside for very small business concerns (see FAR 19.904);

(v) Set-aside (including portions of broad agency announcements) for historically black colleges and universities or minority institutions (see 226.7003 and 235.016);

(vi) Set-aside for emerging small business concerns (see FAR 19.1006(c)); or

(vii) Competition among Section 8(a) firms under FAR 19.805 (report noncompetitive 8(a) awards as code N).

(9) Code N—Other than Full and Open Competition. Enter code N if the action resulted from use of other than full and open competition pursuant to FAR Subpart 6.3. This includes awards

to qualified nonprofit agencies employing people who are blind or severely disabled (see FAR Subpart 8.7) or noncompetitive awards to the Small Business Administration under Section 8(a) of the Small Business Act (see FAR 6.302–5(b)).

(ix) LINE C9, AUTHORITY FOR OTHER THAN FULL AND OPEN COMPETITION.

(A) Leave Line C9 blank if the original contract resulted from a solicitation issued before April 1, 1985 (i.e., before the effective date of the Competition in Contracting Act).

(B) Enter one of the following codes if the action resulted from use of other than full and open competition, i.e., Line C8 is coded N. Otherwise, leave Line C9 blank.

(1) Code 1A—Unique Source. Enter code 1A if the action was justified pursuant to FAR 6.302–1(b)(1).

(2) Code 1B—Follow-On Contract. Enter code 1B if the action was justified pursuant to FAR 6.302–1(a)(2)(ii) or (iii).

(3) Code 1C—Unsolicited Research Proposal. Enter code 1C if the action was justified pursuant to FAR 6.302–1(a)(2)(i).

(4) Code 1D—Patent or Data Rights. Enter code 1D if the action was justified pursuant to FAR 6.302–1(b)(2).

(5) Code 1E—Utilities. Enter code 1E if the action was justified pursuant to FAR 6.302–1(b)(3).

(6) Code 1F—Standardization. Enter code 1F if the action was justified pursuant to FAR 6.302–1(b)(4).

(7) Code 1G—Only One Source—Other. Enter code 1G if the action was justified pursuant to FAR 6.302–1 in a situation other than the examples cited in codes 1A through 1F.

(8) Code 2A—Urgency. Enter code 2A if the action was justified pursuant to FAR 6.302–2.

(9) Code 3A—Particular Sources. Enter code 3A if the action was justified pursuant to FAR 6.302–3(a)(2).

(10) Code 4A—International Agreement. Enter code 4A if the action was justified pursuant to FAR 6.302–4.

(11) Code 5A—Authorized by Statute. Enter code 5A if the action was justified pursuant to FAR 6.302–5(a)(2)(i).

(12) Code 5B—Authorized Resale. Enter code 5B if the action was justified pursuant to FAR 6.302–5(a)(2)(ii).

(13) Code 6A—National Security. Enter code 6A if the action was justified pursuant to FAR 6.302–6.

(14) Code 7A—Public Interest. Enter code 7A if the action was taken pursuant to FAR 6.302–7.

(x) LINE C10, SUBJECT TO LABOR STANDARDS STATUTES. Enter one of the following codes. When the action is an order or modification of an order under a Federal schedule, i.e., Line B13A is coded 6, leave Line C10 blank.

(A) Code A—Walsh-Healey Act. Enter code A when the action is subject to the provisions of FAR Subpart 22.6.

(B) Code C—Service Contract Act. Enter code C when the action is subject to the provisions of the Service Contract Act (see FAR Part 37).

(C) Code D—Davis-Bacon Act. Enter code D when the action is subject to the Davis-Bacon Act (see FAR 22.403–1).

(D) Code Z—Not Applicable. Enter code Z when codes A, C, and D do not apply.

(xi) LINE C11, COST OR PRICING DATA. Enter one of the following codes when the origin of the contract is DoD, i.e., Line B1B is coded A. Otherwise, leave Line C11 blank.

(A) Code Y—Yes—Obtained. Enter code Y when cost or pricing data were obtained (see FAR 15.403–4) and certified in accordance with FAR 15.406–2.

(B) Code N—No—Not Obtained. Enter code N when neither code Y nor code W applies.

(C) Code W—Not Obtained—Waived. Enter code W when cost or pricing data were not obtained because the head of the contracting activity waived the requirement (see FAR 15.403–1(c)(4)).

(xii) LINE C12, CONTRACT FINANCING. When the origin of the contract is DoD, *i.e.*, Line B1B is coded A, enter one of the following codes identifying whether or not progress payments, advance payments, or other financing methods were used. When the origin of the contract is not DoD, leave Line C12 blank.

(A) Code A—FAR 52.232–16. Enter code A if the contract contains the clause at FAR 52.232–16, Progress Payments.

(B) Code C—Percentage of Completion Progress Payments. Enter code C if the contract provides for progress payments based on percentage or stage of completion, which is only permitted on contracts for construction, for shipbuilding, or for ship conversion, alteration, or repair (see 232.102(e)(2)).

(C) Code D—Unusual Progress Payments or Advance Payments. Enter code D if the contract provides unusual progress payments or advance payments (see FAR Subpart 32.4 and 32.501–2).

(D) Code E—Commercial Financing. Enter code E if the contract provides for commercial financing payments (see FAR Subpart 32.2).

(E) Code F—Performance-Based Financing. Enter code F if the contract provides for performance-based financing payments (see FAR Subpart 32.10).

(F) Code Z—Not Applicable. Enter code Z when codes A through F do not apply.

(xiii) LINE C13, FOREIGN TRADE DATA.

(A) The term ''United States (U.S.),'' as used on Line C13, excludes the Trust Territory of Palau (*see* 204.670–1 for definition of United States and outlying areas).

(B) LINE C13A, PLACE OF MANUFACTURE. Complete Line C13A only if the action is for a foreign end product or a service provided by a foreign concern under a DoD contract or a Federal schedule. Otherwise, leave Line C13A blank.

(1) Code A—U.S. Enter code A if the action is for—

(i) A foreign end product that is manufactured in the United States but still determined to be foreign because 50 percent or more of the cost of its components is not mined, produced, or manufactured inside the United States or inside qualifying countries; or

(ii) Services performed in the United States by a foreign concern.

(2) Code B—Foreign. Enter code B if the action is for—

(i) Any other foreign end product; or

(ii) Services performed outside the United States by a foreign concern.

(C) LINE C13B, COUNTRY OF ORIGIN CODE.

(1) Complete Line C13B only if Line C13A is coded A or B. Otherwise, leave Line C13B blank.

(2) Enter the code from FIPS PUB 10, Countries, Dependencies, Areas of Special Sovereignty, and Their Principal Administrative Divisions, that identifies the country where the foreign product is coming from or where the foreign company providing the services is located. If more than one foreign country is involved, enter the code of the foreign country with the largest dollar value of work under the contract.

(xiv) LINE C14, COMMERCIAL ITEM. Enter one of the following codes:

(A) *Code Y—Yes—FAR 52.212–4 Included.* Enter code Y if the contract contains the clause at FAR 52.212–4, Contract Terms and Conditions—Commercial Items.

(B) *Code N—No—FAR 52.212–4 Not Included.* Enter code N if code Y does not apply.

(d) *Part D of the DD Form 350.*

(1) Do NOT complete Part D if the action is—

(i) With a government agency, *i.e.,* Line B5B is coded Y; or

(ii) An order under a Federal schedule, *i.e.,* Line B13A is coded 6.

(2) Use the codes on Lines B13A and B13D to determine whether the codes in Part D will describe the current action or the original contract.

(i) Code Part D to describe the current action when—

(A) The action is a new requirement, *i.e.,* Line B13A is coded 1, 3, 4, 7, or 9 and Line B13D is coded A or is blank; or

(B) The action is an order from the Schedule or the Procurement List, *i.e.,* Line B13A is coded 8 and Line B13D is coded A or is blank.

(ii) Otherwise, code Part D to describe the original contract. If there are no codes for the original contract because a DD Form 350 was not required at the time, the original action is no longer available, the definition of the original code has changed, or a data element has been added to the system after the original contract report, use codes that best describe the original action.

(3) Determine the status of the concern (*e.g.,* size and ownership) in accordance with FAR Part 19 and DFARS Part 219.

(4) Complete Part D as follows:

(i) LINE D1, TYPE OF CONTRACTOR.

(A) LINE D1A, TYPE OF ENTITY. Enter one of the following codes:

(1) Code A—Small Disadvantaged Business (SDB) Performing in U.S. Enter code A if the contractor is a small disadvantaged business concern as defined in 219.001 and the place of performance is within the United States and outlying areas.

(2) Code B—Other Small Business (SB) Performing in U.S. Enter code B if the contractor is a small business concern as defined in FAR 19.001, other than a small disadvantaged business concern, and the place of performance is within the United States and outlying areas.

(3) Code C—Large Business Performing in U.S. Enter code C if the contractor is a domestic large business concern and the place of performance is within the United States and outlying areas.

(4) Code D—JWOD Participating Nonprofit Agency. Enter code D if the contractor is a qualified nonprofit agency employing people who are blind or severely disabled (see FAR 8.701) and the place of performance is within the United States and outlying areas.

(5) Code F—Hospital. Enter code F if the contractor is a hospital and the place of performance is within the United States and outlying areas.

(6) Code L—Foreign Concern or Entity. Enter code L if the contractor is a foreign concern, the Canadian Commercial Corporation, or a non-U.S.-chartered nonprofit institution.

(7) Code M—Domestic Firm Performing Outside U.S. Enter code M if the contractor is a domestic concern or a domestic nonprofit institution and the place of performance is outside the United States and outlying areas.

(8) Code T—Historically Black College or University (HBCU). Enter code T if the contractor is an HBCU as defined at 252.226–7000 and the place of performance is within the United States and outlying areas.

(9) Code U—Minority Institution (MI). Enter code U if the contractor is an MI as defined at 252.226–7000 and the place of performance is within the United States and outlying areas.

(10) Code V—Other Educational. Enter code V if the contractor is an educational institution that does not qualify as an HBCU or MI and the place of performance is within the United States and outlying areas.

(11) Code Z—Other Nonprofit. Enter code Z if the contractor is a nonprofit organization (as defined in FAR 31.701) that does not meet any of the criteria in codes D, F, T, U, or V and the place of performance is within the United States and outlying areas.

(B) LINE D1B, WOMEN-OWNED BUSINESS. Enter one of the following codes:

(1) Code Y—Yes. Enter code Y if the contractor's response to FAR 52.204–5, 52.212–3(c), or 52.219–1(b) indicates that it is a women-owned business.

(2) Code N—No. Enter code N if the contractor's response to FAR 52.204–5, 52.212–3(c), or 52.219–1(b) indicates that it is not a women-owned business.

(3) Code U—Uncertified. Enter code U if the information is not available because the contractor did not complete the representation in FAR 52.204–5, 52.212–3(c), or 52.219–1(b).

(C) LINE D1C, HUBZONE REPRESENTATION. Enter one of the following codes when the contractor is a small business performing inside the United States, i.e., Line D1A is coded A or B. Otherwise, leave Line D1C blank.

(1) Code Y—Yes. Enter code Y if the contractor represented that it is a HUBZone small business concern at the time of contract award (see FAR 19.1303).

(2) Code N—No. Enter code N if code Y does not apply.

(D) LINE D1D, ETHNIC GROUP.

(1) Complete Line D1D if the action is with a small disadvantaged business and the origin of the contract is DoD, i.e., Line B1B is coded A. Otherwise, leave Line D1D blank.

(2) Enter the code from the following list that corresponds to the ethnic group that the contractor marked in the solicitation provision at FAR 52.219–1, Small Business Program Representations, or FAR 52.212–3(c).

(i) Code A—Asian-Indian American.

(ii) Code B—Asian-Pacific American.

(iii) Code C—Black American.

(iv) Code D—Hispanic American.

(v) Code E—Native American.

(vi) Code F—Other SDB Certified or Determined by SBA.

(vii) Code Z—No Representation.

(E) LINE D1E, VETERAN-OWNED SMALL BUSINESS. Enter one of the following codes if the contractor is a veteran-owned small business. Otherwise, leave Line D1E blank.

(1) Code A—Service-Disabled Veteran. Enter code A if the contractor represented that it is a service-disabled veteran-owned small business.

(2) Code B—Other Veteran. Enter code B if the contractor represented that it is a veteran-owned small business, other than a service-disabled veteran-owned small business.

(ii) LINE D2, REASON NOT AWARDED TO SDB. Enter one of the following codes when the contractor is a small business (other than a small disadvantaged business) or a large business performing in the United States, *i.e.,* Line D1A is coded B or C. Otherwise, leave Line D2 blank.

(A) *Code A—No Known SDB Source.*

(B) *Code B—SDB Not Solicited.* Enter code B when there was a known SDB source, but it was not solicited.

(C) *Code C—SDB Solicited and No Offer Received.* Enter code C when an SDB was solicited but it did not submit an offer, or its offer was not sufficient to cover the total quantity requirement so it received a separate award for the quantity offered.

(D) *Code D—SDB Solicited and Offer Was Not Low.* Enter code D when an SDB offer was not the low or most advantageous offer or an SDB was not willing to accept award of a partial small business set-aside portion of an action at the price offered by the Government.

(E) *Code Z—Other Reason.* Enter code Z when an SDB did not receive the award for any other reason or when the action is an order or modification of an order under a non-DoD contract, *i.e.,* Line B1B is coded B or C and Line B13A is coded 5.

(iii) LINE D3, REASON NOT AWARDED TO SB. Enter one of the following codes when the contractor is a large business performing in the United States, *i.e.,* Line D1A is coded C. Otherwise, leave Line D3 blank. (The term ''small business'' includes all categories of small businesses.)

(A) *Code A—No Known SB Source.*

(B) *Code B—SB Not Solicited.* Enter code B when there was a known small business source, but it was not solicited.

(C) *Code C—SB Solicited and No Offer Received.* Enter code C when a small business concern was solicited

but it did not submit an offer, or its offer was not sufficient to cover the total quantity requirement so it received a separate award for the quantity offered.

(D) *Code D—SB Solicited and Offer Was Not Low.* Enter code D when a small business offer was not the low or most advantageous offer or a small business concern was not willing to accept award of a set-aside portion of an action at the price offered by the Government.

(E) *Code Z—Other Reason.* Enter code Z when a small business did not receive the award for any other reason or when the action is an order or modification of an order under a non-DoD contract, i.e., Line B1B is coded B or C and Line B13A is coded 5.

(iv) LINE D4, SET-ASIDE OR PREFERENCE PROGRAM.

(A) LINE D4A, TYPE OF SET-ASIDE. Enter one of the following codes:

(1) Code A—None. Enter code A if there was no set-aside (i.e., codes B through L do not apply).

(2) Code B—Total SB Set-Aside. Enter code B if the action was a total set-aside for small business (see FAR 19.502–2), including actions reserved exclusively for small business concerns pursuant to FAR 13.003(b)(1), or if the action resulted from the Small Business Innovation Research Program.

(3) Code C—Partial SB Set-Aside. Enter code C if the action was a partial set-aside for small business (see FAR 19.502–3).

(4) Code D—Section 8(a) Set-Aside or Sole Source. Enter code D if the contract was awarded to—

(i) The Small Business Administration under Section 8(a) of the Small Business Act (see FAR Subpart 19.8); or

(ii) An 8(a) contractor under the direct award procedures at 219.811.

(5) Code E—Total SDB Set-Aside. Enter code E if the action was a total set-aside for small disadvantaged businesses.

(*6*) *Code F—HBCU or MI—Total Set-Aside.* Enter code F if the action was a total set-aside for HBCU or MI (see 226.7003).

(*7*) *Code G—HBCU or MI—Partial Set-Aside.* Enter code G if the action was a partial set-aside for HBCU or MI under a broad agency announcement (see 235.016).

(*8*) *Code H—Very Small Business Set-Aside.* Enter code H if the action was a set-aside for very small businesses (see FAR Subpart 19.9).

(*9*) *Code J—Emerging Small Business Set-Aside.* Enter code J if the action was an emerging small business set-aside within a designated industry group under the Small Business Competitiveness Demonstration Program (see FAR Subpart 19.10).

(*10*) *Code K—HUBZone Set-Aside or Sole Source.* Enter code K if the action was—

(*i*) A set-aside for HUBZone small business concerns (see FAR 19.1305); or

(*ii*) A sole source award to a HUBZone small business concern (see FAR 19.1306).

(*11*) *Code L—Combination HUBZone and 8(a).* Enter code L if the action was a combination HUBZone set-aside and 8(a) award.

(B) LINE D4B, TYPE OF PREFERENCE. Enter one of the following codes, even if Line D4A is coded E:

(*1*) *Code A—None.* Enter code A if no preference was given.

(*2*) *Code B—SDB Price Evaluation Adjustment—Unrestricted.* Enter code B if the action was unrestricted but an SDB received an award as a result of a price evaluation adjustment (see FAR Subpart 19.11).

(*3*) *Code C—SDB Preferential Consideration—Partial SB Set-Aside.* Enter code C if the action was a partial set-aside for small business and preferential consideration resulted in an award to an SDB.

(*4*) *Code D—HUBZone Price Evaluation Preference.* Enter code D if the contractor received the award as a result of a HUBZone price evaluation preference (see FAR 19.1307).

(*5*) *Code E—Combination HUBZone Price Evaluation Preference and SDB Price Evaluation Adjustment.* Enter code E if the contractor received the award as a result of both a HUBZone price evaluation preference and an SDB price evaluation adjustment (see FAR 19.1307).

(C) LINE D4C, PREMIUM PERCENT.

(*1*) Complete Line D4C if the origin of the contract is DoD, i.e., Line B1B is coded A, and—

(*i*) An SDB or HBCU/MI set-aside was used, i.e., Line D4A is coded E, F, or G; or

(*ii*) A preference program was used, i.e., Line D4B is coded B, C, D, or E.

(*2*) Otherwise, leave Line D4C blank.

(*3*) Calculate the premium percentage per 219.202–5 and enter it as a three-digit number rounded to the nearest tenth, e.g., enter 7.55% as 076. If no premium was paid, enter three zeros (000).

(v) LINES D5—D6. Reserved.

(vi) LINE D7, SMALL BUSINESS INNOVATION RESEARCH (SBIR) PROGRAM. Enter one of the following codes. When the action is an order or modification of an order under a non-DoD contract, i.e., Line B1B is coded B or C and Line B13A is coded 5, leave Line D7 blank.

(A) *Code A—Not a SBIR Program Phase I, II, or III.* Enter code A if the action is not in support of a Phase I, II, or III SBIR Program.

(B) *Code B—SBIR Program Phase I Action.* Enter code B if the action is related to a Phase I contract in support of the SBIR Program.

(C) *Code C—SBIR Program Phase II Action.* Enter code C if the action is related to a Phase II contract in support of the SBIR Program.

(D) *Code D—SBIR Program Phase III Action.* Enter code D if the action is related to a Phase III contract in support of the SBIR Program.

(vii) LINE D8, SUBCONTRACTING PLAN—SB, SDB, HBCU, OR MI. Enter one of the following codes:

(A) *Code A—Plan Not Included—No Subcontracting Possibilities.* Enter code A if a subcontracting plan was not included in the contract because subcontracting possibilities do not exist (see FAR 19.705–2(c)).

(B) *Code B—Plan Not Required.* Enter code B if no subcontracting plan was required (*e.g.,* because the action did not meet the dollar thresholds in FAR 19.702(a)).

(C) *Code C—Plan Required—Incentive Not Included.* Enter code C if the action includes a subcontracting plan, but does not include additional incentives (see FAR 19.708(c)).

(D) *Code D—Plan Required—Incentive Included.* Enter code D if the action includes a subcontracting plan and also includes additional incentives (see FAR 19.708(c) and 219.708(c)).

(viii) LINE D9, SMALL BUSINESS COMPETITIVENESS DEMONSTRATION PROGRAM. When the action is under a contract that was awarded before the demonstration program began (January 1, 1989) and does not involve a new work modification, enter code N on Line D9. When the action is an order or modification of an order under a non-DoD contract, i.e., Line B1B is coded B or C and Line B13A is coded 5, enter code N on Line D9. Otherwise, code Line D9 as follows:

(A) *Code Y—Yes.* Enter code Y if this is an action with a U.S. business concern, in either the four designated industry groups or the ten targeted industry categories under the Small Business Competitiveness Demonstration Program (see FAR Subpart 19.10 and DFARS Subpart 219.10), where the principal place of performance is in the United States or outlying areas.

(B) *Code N—No.* Enter code N if code Y does not apply.

(ix) LINE D10, SIZE OF SMALL BUSINESS.

(A) Complete Line D10 only when the contractor is a small business performing in the United States and the action is under the Small Business Competitiveness Demonstration Program, *i.e.,* Line D1A is coded A or B and Line D9 is coded Y. Otherwise, leave Line D10 blank.

(B) Enter one of the following codes for the size of the business (number of employees or average annual gross revenue) as represented by the contractor in the solicitation provision at FAR 52.219–19, Small Business Concern Representation for the Small Business Competitiveness Demonstration Program:

(*1*) *Code A—50 or fewer employees.*

(*2*) *Code B—51–100 employees.*

(*3*) *Code C—101–250 employees.*

(*4*) *Code D—251–500 employees.*

(*5*) *Code E—501–750 employees.*

(*6*) *Code F—751–1,000 employees.*

(*7*) *Code G—Over 1,000 employees.*

(*8*) *Code M—$1 million or less.*

(*9*) *Code N—Over $1 million—$2 million.*

(*10*) *Code P—Over $2 million—$3.5 million.*

(*11*) *Code R—Over $3.5 million—$5 million.*

(*12*) *Code S—Over $5 million—$10 million.*

(*13*) *Code T—Over $10 million—$17 million.*

(*14*) *Code U—Over $17 million.*

(x) LINE D11, EMERGING SMALL BUSINESS.

(A) Complete this line only if the action is under the Small Business Competitiveness Demonstration Program, i.e., Line D9 is coded Y, and the action is in one of the four designated industry groups, not one of the targeted industry categories. Otherwise, leave Line D11 blank.

(B) Enter one of the following codes:

(*1*) *Code Y—Yes.* Enter code Y if the contractor represents in the provision at FAR 52.219–19, Small Business Concern Representation for the Small Business Competitiveness Demonstration Program, that it is an emerging small business concern.

(*2*) *Code N—No.* Enter code N if code Y does not apply.

(e) *Part E of the DD Form 350.* Part E gathers data on specialized items that may not become permanent reporting elements.

(1) LINE E1, CONTINGENCY, HUMANITARIAN, OR PEACEKEEPING OPERATION.

(i) Enter code Y on Line E1 if the action exceeds $200,000 and is in support of—

(A) A contingency operation as defined in 10 U.S.C. 101(a)(13); or

(B) A humanitarian or peacekeeping operation as defined in 10 U.S.C. 2302(8).

(ii) Otherwise, leave Line E1 blank.

(2) LINE E2, COST ACCOUNTING STANDARDS CLAUSE. Enter code Y on Line E2 if the contract includes a Cost Accounting Standards clause (see FAR Part 30). Otherwise, leave Line E2 blank.

(3) LINE E3, REQUESTING AGENCY CODE (FIPS 95). If making a purchase on behalf of a non-DoD agency, enter the four-position code from FIPS PUB 95 that identifies the non-DoD agency. If making a purchase for another DoD department or agency, enter 2100 for Army, 1700 for Navy, 5700 for Air Force, 97AS for DLA, 96CE for USACE, 9763 for DCMA, and 9700 for all other defense agencies. Otherwise, leave Line E3 blank.

(4) LINE E4, REQUESTING ACTIVITY CODE. If making a purchase on behalf of a non-DoD agency, enter the non-DoD agency's office code, if provided. Otherwise, leave Line E4 blank. If making a purchase on behalf of a DoD activity, enter the DoDAAC of the activity for whom the purchase was made. DoDAACs can be found at: *https://day2k1.daas.dla.mil/dodaac/dodaac.asp.* If multiple requesting activities are involved, enter the DoDAAC of the activity that provided the largest portion of funding for the action.

(5) LINE E5, NUMBER OF ACTIONS. If submitting a consolidated DD Form 350, enter the number of actions included in the consolidated report (see 204.670–6(b)). Otherwise, enter 1 on Line E5.

(6) LINE E6, PAYMENT BY GOVERNMENTWIDE PURCHASE CARD. If payment is to be made through use of the Governmentwide purchase card, enter Y on Line E6. Otherwise, leave Line E6 blank.

(f) *Part F of the DD Form 350.* Part F identifies the reporting official.

(1) LINE F1, NAME OF CONTRACTING OFFICER OR REPRESENTATIVE. Enter the name (Last, First, Middle Initial) of the contracting officer or representative.

(2) LINE F2, SIGNATURE. The person identified on Line F1 must sign.

(3) LINE F3, TELEPHONE NUMBER. Enter the telephone number (with area code) for the individual on Line F1. Installations with Defense Switched Network (DSN) must enter the DSN number.

(4) LINE F4, DATE. Enter the date that the DD Form 350 Report is submitted. Enter four digits for the year, two digits for the month, and two digits for the day. Use 01 through 12 for January through December. For example, enter January 2, 2003, as 20030102.

[FR Doc. 02–17524 Filed 7–11–02; 8:45 am]

BILLING CODE 5001–08–P

DEPARTMENT OF DEFENSE

48 CFR Part 252

[DFARS Case 2000–D014]

Defense Federal Acquisition Regulation Supplement; Ocean Transportation by U.S.-Flag Vessels; Correction

AGENCY: Department of Defense (DoD).

ACTION: Correction to final rule.

SUMMARY: DoD is issuing a correction to the final rule published at 67 FR 38020–38022 on May 31, 2002, pertaining to requirements for use of U.S.-flag vessels in the transportation of supplies by sea.

EFFECTIVE DATE: May 31, 2002.

FOR FURTHER INFORMATION CONTACT: Ms. Amy Williams, Defense Acquisition Regulations Council, OUSD(AT&L)DP(DAR), IMD 3C132, 3062 Defense Pentagon, Washington, DC 20301–3062. Telephone (703) 602–0328; facsimile (703) 602–0350.

Correction

In the issue of Friday, May 31, 2002, on page 38021, in the third column, amendatory instruction 5.b. is corrected by removing ''252.247–2023'' and adding in its place ''252.247–7023''.

Michele P. Peterson,

Executive Editor, Defense Acquisition Regulations Council.

[FR Doc. 02–17521 Filed 7–11–02; 8:45 am]

BILLING CODE 5001–08–P

DEPARTMENT OF TRANSPORTATION

Research and Special Programs Administration

49 CFR Parts 172, 174, 175, 176, and 177

[Docket No. RSPA–01–10568 (HM–207B)]

RIN 2137–AC64

Hazardous Materials: Retention of Shipping Papers

AGENCY: Research and Special Programs Administration (RSPA), DOT.

ACTION: Final rule.

SUMMARY: RSPA is amending the Hazardous Materials Regulations to require shippers and carriers to retain a copy of each hazardous material

shipping paper, or an electronic image thereof, for a period of 375 days after the date the hazardous material is accepted by a carrier.

EFFECTIVE DATE: This final rule is effective on August 12, 2002.

FOR FURTHER INFORMATION CONTACT: Deborah Boothe of the Office of Hazardous Materials Standards, (202) 366–8553, Research and Special Programs Administration, U.S. Department of Transportation.

SUPPLEMENTARY INFORMATION:

I. Background

The Hazardous Materials Regulations (HMR; 49 CFR parts 171–180) require a person who offers a hazardous material for transportation in commerce to describe the hazardous material on a shipping paper in the manner required in 49 CFR part 172, subpart C. A paper copy of the shipping paper must accompany a hazardous material during transportation. A shipping paper includes ''a shipping order, bill of lading, manifest or other shipping document serving a similar purpose and containing the information required by §§ 172.202, 172.203 and 172.204.'' 49 CFR 171.8 (definition of ''shipping paper''). A hazardous waste manifest ''may be used as the shipping paper'' if it contains all the information required by part 172, subpart C. 49 CFR 172.205(h).

Since 1980, generators and transporters of hazardous waste have been required to retain a copy of the hazardous waste manifest ''for three years from the date the waste was accepted by the initial carrier.'' 49 CFR 172.205(e)(5), adopted in RSPA's May 22,1980 final rule, 45 FR 34560, 34698. *See also* regulations of the U.S. Environmental Protection Agency at 40 CFR 262.40(a), 263.22(a).

In 1994, Congress amended the Federal hazardous material transportation law (Federal hazmat law) to require that, after a hazardous material ''is no longer in transportation,'' each offeror and carrier of a hazardous material must retain the shipping paper ''or electronic image thereof for a period of 1 year to be accessible through their respective principal places of business.'' 49 U.S.C. 5110(e), added by Pub. L. 103–311, Title I, § 115, 108 Stat. 1678 (Aug. 26, 1994). That section also provides that the offeror and carrier ''shall, upon request, make the shipping paper available to a Federal, State, or local government agency at reasonable times and locations.''

On September 12, 2001, the Research and Special Programs Administration (RSPA, we) issued a notice of proposed rulemaking (NPRM) to amend the HMR to conform with § 5110(e) (66 FR 47443). We proposed to add a new § 172.201(e) and amend §§ 174.24, 175.30, 176.24, and 177.817 to require each shipper and carrier to retain a copy of the shipping paper, or an electronic image thereof, for a period of 375 days after the date a hazardous material is offered for transportation by the shipper and accepted by the carrier. An electronic image includes an image transmitted by a facsimile (FAX) machine, an image on the screen of a computer, or an image generated by an optical imaging machine. In order to facilitate compliance with and enforcement of the requirement, we proposed that the copy include the date that the shipment is accepted for transportation by the initial carrier. We further proposed to require the shipping paper copy or its electronic image to be accessible at or through the principal place of business of each person required to prepare or maintain it during transportation.

Except for hazardous waste manifests, *see* 49 CFR 172.205(a), the HMR do not require a shipping paper to be in any specific form or format. We understand that different types of documents are used by offerors of hazardous material to meet the requirement to describe the hazardous material on a ''shipping paper.'' Some private motor carriers use the same shipping paper for multiple shipments of a hazardous material. Typically, these permanent shipping papers are used by private motor carriers who transport a single hazardous material on a regular basis over an extended period, such as one cargo tank of gasoline. However, permanent shipping papers may also be utilized by common or contract carriers. In the NPRM, we proposed to permit operators to retain a single copy of such permanent shipping papers for the period in which the shipping paper is used and 375 days thereafter, provided that the operator also retains a record of each shipment made under the shipping paper.

II. Discussion of Comments

We received 16 written comments. The commenters included a university, utility companies, shippers, carriers, and representatives from industry associations representing a broad spectrum of businesses that offer hazardous materials for transportation or transport hazardous materials in commerce. Most commenters generally support the intent of the proposal to require a copy of the shipping paper or an electronic image thereof to be retained for 375 days after the date the initial carrier accepts the hazardous materials for transportation. One commenter suggests that we implement a system for tracking hazardous materials shipments. Other commenters suggest revisions to the NPRM proposals related to the shipping paper retention period, acceptance date, permanent shipping papers, mode-specific requirements, retention at principal place of business, and proposed legislative changes to the current shipping paper requirement in the Federal hazmat law.

A. Shipment Tracking System

Florida International University (FIU) suggests we require shippers and carriers to implement a tracking system that would show the exact date when transportation ends. According to FIU,

> ''With a better tracking system, shippers and carriers will be able to know when the shipment departs and when it arrives at its final destination. We think there should be a document or form, which should be created for the original carrier, all intermediate carriers (if any), and the final carrier who receives the cargo. This form should be returned to the previous carrier and originating location electronically notifying the shipment's arrival and condition. By doing this, it will ensure the tracking of the dates and time it takes exactly to arrive to each destination (if going through more than one destination). With a better tracking system it would even be convenient to make the original carrier responsible and liable for knowing at any given time the current location, final destination, and final date of transportation. All this, of course, in addition to keeping records of the materials. All second hand carriers should electronically report all information to the first carrier.''

We disagree. For purposes of this rulemaking, a complicated and expensive tracking system of the type suggested by FIU is not necessary. Nor do we agree that a second shipping document would help achieve the goals of this rulemaking. The current shipping paper requirement, modified as proposed in the NPRM, is adequate to assure implementation of the shipping paper retention requirement in Federal hazmat law. Further, an additional form would result in an unacceptable increase in paperwork burden on the regulated industry.

B. 375-Day Retention Period

The NPRM proposed to require shipping papers to be retained for 375 days (one year plus 10 days) for consistency with the statutory requirement that shipping papers be retained for one year *after transportation ends.* Over 95 percent of hazardous materials shipments are

delivered within 10 days after they are offered to a carrier. Most commenters support the proposed 375-day period for retention of shipping papers. However, one commenter, the Institute of Makers of Explosives (IME), stated the retention requirement should be ''1 year'' as stated in the law. IME states that ''* * * delivery may not take place within 10 days in all cases. While as a whole most hazardous materials shipments may be delivered within 10 days (largely because of the preponderance of flammable liquid deliveries), across different hazard classes and types of carriers the '10-day' delivery date is going to vary widely. For simplicity, the retention requirement should be simply, as stated in the law, '1 year.' '' We disagree. The current statutory requirement is for shipping papers to be retained for one year after a shipment is ''no longer in transportation.'' A regulatory requirement to retain shipping papers for one year is not consistent with the statutory requirement. A requirement to retain shipping papers for 375 days accommodates most shipment delivery times. In this final rule, we are adopting the 375-day retention period as proposed.

C. Acceptance Date

Several commenters object to the proposal to require shipping papers to include the date the shipment is accepted by the initial carrier. The Association of American Railroads (AAR) notes that for rail transportation, ''the date on railroad shipping papers (waybills) is the date a shipment has been offered for transportation, *i.e.,* when the shipper has notified a railroad the shipment is ready to be picked up by the railroads. That date may or may not be the actual date a shipment is picked up by a railroad. It is common practice for a railroad to pick up a shipment one or more days after it is ready for transportation. Consequently, the railroads oppose the proposed requirement that the date of actual acceptance be placed on shipping papers. It would take substantial investment in computer reprogramming and changes in railroad procedures to use the date of actual receipt of a shipment on shipping papers.'' The Fertilizer Institute (TFI) requests clarification of the meaning of ''date of acceptance.'' TFI states, ''[W]hen shipments are presented for transportation, a signature generally is required on the Bill of Lading (BOL). We assume that the signature and date on the BOL will establish the 'date of acceptance' and trigger the retention period. * * * However, the date of shipment and the date of acceptance are not always the same. This is especially true for rail shipments. A BOL may be sent electronically to the railroad many hours, sometimes days, prior to the arrival of the train crew who accepts a shipment. RSPA should specify how the retention period is triggered in this situation.'' It was not our intention in the NPRM to require shippers and carriers to implement new systems for preparing and dating shipping documentation. We agree with AAR and TFI that the shipping paper retention requirements should be sufficiently flexible to accommodate current rail transportation practices. In this final rule, the shipping paper requirements for rail shipments permit the date on the shipping paper to be the date a shipper notifies the rail carrier that a shipment is ready for transportation, as indicated on the waybill or bill of lading, as an alternative to the date the shipment is picked up, or accepted, by the carrier.

IME is concerned that a shipper may not always know when the carrier accepts a shipment, especially rail shipments. IME suggests that requiring both the shipper and carrier to date the shipping paper on the date the carrier accepts the shipment may not be the best approach. IME recommends ''the date be keyed to when the shipper 'prepares the shipping paper' instead * * * This would also reduce the compliance burden, as the initial carrier does not have to add a subsequent 'acceptance' date.'' We disagree. A shipper may prepare shipping papers well in advance of offering a shipment for transportation. The date of acceptance of a shipment by a carrier more closely approximates the actual beginning of transportation and is, thus, consistent with the current statutory requirement for retention of shipping papers for one year after transportation ends. As stated above, for rail shipments, this final rule permits the date on a shipping paper to be the date the carrier is notified that a shipment is ready for transportation as an alternative to the date the carrier picks up, or accepts, the shipment. This revision to the NPRM proposal should help to minimize the compliance burden on shippers and carriers.

The Agricultural Retailers Association (ARA) opposes inclusion of the acceptance date on shipping papers, as proposed. ARA states, ''This proposal appears to be arbitrary and capricious. There will be a cost involved to change recordkeeping systems that are based on one year and without apparent benefit economically or safety-wise.'' We disagree. The proposed 375-day retention period begins from the date a shipment is offered and accepted by the initial carrier for transportation. This is the same date that the three-year retention period for hazardous waste manifests starts. Well over 95 percent of hazardous materials shipments are delivered within 10 days after they are offered to a carriers. Therefore, for these shipments, our proposal to begin the 375-day retention period on the date a shipment is offered and accepted by the initial carrier is consistent with the statutory requirement for retention of shipping documents for one year after transportation ends.

AAR suggests that we require only the last modified version of the shipping paper to be retained. AAR states that ''shipping papers can be changed multiple times in the course of a shipment. Reasons for changing shipping papers include: substitution of the scale weight for the initial estimate of the weight; diversion or reconsignment of a shipment; and addition of switching information. There is no reason to keep versions of shipping papers that have been superseded.'' Provided the shipment notification date or date of acceptance is on the shipping paper, we agree that the current railroad practice to retain the last modified version of the shipping paper is acceptable for retention purposes proposed under this rulemaking.

D. Permanent Shipping Papers

Most commenters support the NPRM proposal as it applies to permanent shipping papers. However, three commenters oppose the proposal to require shippers to retain a record of each shipment made under a permanent shipping paper. SRP, an electric system operator and provider, and the Utility Solid Waste Activities Group (USWAG) state, ''RSPA's proposal to require maintenance of a running record of each shipment made under a 'permanent shipping paper' goes above and beyond statutory requirements and existing regulatory practice to create a redundant recordkeeping obligation with little apparent value.'' SRP further states that '' this requirement would significantly impact our workload, again with no gain from a transportation safety aspect.''

We disagree that the requirement to retain a copy of a daily record of the shipments made under a permanent shipping paper increases the recordkeeping burden. We also disagree that maintenance of a running record of each shipment made under a ''permanent shipping paper'' goes above and beyond statutory requirements and existing regulatory practice. It is our understanding that retention of this type

of information on a daily basis is standard business practice for inventory and tax purposes, and therefore, does not pose an additional recordkeeping burden. The federal hazmat law requires a shipping paper to be retained for each hazardous materials shipment. Thus, a requirement to maintain a record of each shipment made under a permanent shipping paper is entirely consistent with the statute.

E. Mode-Specific Requirements

United Parcel Service (UPS) suggests that proposing to delete the second sentence of § 175.30(a)(2), which requires only the originating aircraft operator to retain a copy of the shipping paper, poses a new problem concerning the shipper's certification required by § 172.204. According to UPS, the current regulations for air, motor, and rail carriers allow for the shipper's certificate to be delivered to the originating operator. This provision continues in the regulations applicable to the surface modes that are proposed in this rulemaking. UPS states that ''by proposing to delete the current sentence focused on the originating aircraft operator, RSPA has proposed to require that the certification be delivered to every and all air carriers involved in the movement of a specific shipment. This requirement has the potential to impose a significant burden on operators who rely on close partnerships with dedicated charter air carriers to extend their delivery networks and may use streamlined documentation to furnish the required hazardous materials information to those partner carriers.'' UPS indicates a need for uniformity in application of the HMR for each mode. We agree that the application of the shipper's certification should be uniform as it applies to the modes. In this final rule, we revised § 175.30(a)(2) to indicate that the initial air carrier will receive the shipper's certification in accordance with provisions in § 172.204.

The Fertilizer Institute (TFI) requests clarification of the proposed language in § 176.24(a). TFI is concerned that ''RSPA may have unintentionally narrowed the scope of exceptions to shipping paper requirements. Currently, this section references only the exceptions to shipping paper requirements specified in § 172.200(b). Section 173.315(m) also contains exceptions from shipping paper requirements under certain conditions. We strongly recommend that RSPA omit references to specific CFR sections and simply reference exceptions to shipping paper requirements in general.'' We did not intend to eliminate the current exception from shipping paper requirements for hazardous materials shipped in accordance with § 173.315(m) or any other exceptions stated elsewhere in the HMR. In this final rule we have modified the language for clarity.

The American Trucking Associations suggest that the proposed revisions to § 177.817(a) relieve a motor carrier from the responsibility to carry a copy of the shipping paper with the shipment on the motor vehicle. We agree that the proposed language should be clarified, and have done so in this final rule. The American Trucking Associations further suggest that the proposed revisions to § 177.817(a) require a shipper's certification on all copies of the shipping paper instead of the initial carrier's copy. We disagree. Section 177.817(b) addresses a shipper certification on a shipping paper offered to an initial carrier. Paragraph (b) of § 177.817 is unchanged in this final rule.

F. Principal Place of Business

Several commenters say that requiring shipping papers to be accessible at or through a central location or principal place of business, and to be ''immediately available'' upon request to authorized officials may cause problems. According to the Dangerous Goods Advisory Council (DGAC; formerly the Hazardous Materials Advisory Council), ''* * * production plants or other shipping points have the original signed documents. Copies, or electronic images thereof, can be transferred to a central location but not instantaneously as implied in the proposal.'' DGAC suggested that the proposal be modified to require shipping papers to be ''immediately available to shipping/origination points or available within 48 hours at a central location'' in order to recognize a common industry practice of batch processing of documents for electronic transmission. Similarly, the Air Transport Association states that ''* * * air carriers principal places of business must include all airport locations where the carrier operates, as carriers normally maintain shipping paper record files at the origin station. Requiring air carriers to maintain a storage or a data base for shipping papers at a headquarters office location would not appear feasible or desirable.'' We disagree with the commenters. The proposal does not require duplicate sets of shipping records to be maintained at various locations. The proposal requires copies of shipping papers or electronic images of shipping papers to be immediately available at a company's principal place of business. With facsimile machines and email capabilities, companies can transmit copies of shipping papers from shipping locations to a principal place of business very quickly. A 48-hour period is not necessary to fax or email a copy of a shipping document. An authorized official will need to see a copy while he or she is on the premises conducting an inspection, not 48 hours later. The proposal is adopted in this final rule.

The Air Transport Association also expressed concern with the wording in the NPRM that allows retention of an ''electronic image'' of a shipping paper. According to the Air Transport Association, an image is not the same as an electronic record of the information on the shipping paper. The wording ''electronic image'' is taken directly from the Federal hazmat law. As we explained in the NPRM, an electronic image includes an image transmitted by a facsimile machine, an image on the screen of a computer, or an image generated by an optical imaging machine. The Air Transport Association's suggestion that we revise the proposal to permit retention of an electronic record of the information on the shipping paper is not consistent with the statutory requirement.

G. Three-Year Retention (HMTA Re-authorization)

Two commenters note that the Administration's proposed legislation to re-authorize the hazardous materials transportation safety program requires retention of shipping papers for three years. Both commenters are opposed to the proposal in the re-authorization legislation. The bill is currently under consideration by the Congress. At such time as the legislation becomes law, we will address any revisions to the current shipping paper retention requirements.

III. Regulatory Analyses and Notices

A. Executive Order 12866 and DOT Regulatory Policies and Procedures

This final rule is not considered a significant regulatory action under Executive Order 12866 and, was not reviewed by the Office of Management and Budget. This final rule is not considered significant under the regulatory policies and procedures of the Department of Transportation (44 FR 11034).

This final rule implements a statutory requirement that has been in effect since 1994. We do not anticipate any additional costs on offerors and carriers of hazardous materials, and, preparation of a regulatory evaluation is not warranted.

B. Executive Order 13132

This final rule has been analyzed in accordance with the principles and criteria contained in Executive Order 13132 (''Federalism''). Federal hazardous materials transportation law preempts any State, local, or Indian tribe requirement on the preparation, execution, and use of shipping documents related to hazardous materials that is not substantively the same as this final rule, 49 U.S.C. 5125(b)(1)(B), but this final rule does not have substantial direct effects on the states, the relationship between the national government and the states, or the distribution of power and responsibilities among the various levels of government. The consultation and funding requirements of Executive Order 13132 do not apply.

Federal hazardous materials transportation law, 49 U.S.C. 5101–5127, contains an express preemption provision (49 U.S.C. 5125(b)) preempting state, local, and Indian tribe requirements on certain covered subjects. Covered subjects are:

(1) The designation, description, and classification of hazardous materials;

(2) The packing, repacking, handling, labeling, marking, and placarding of hazardous materials;

(3) The preparation, execution, and use of shipping documents related to hazardous materials and requirements related to the number, contents, and placement of those documents;

(4) The written notification, recording, and reporting of the unintentional release in transportation of hazardous material; or

(5) The design, manufacture, fabrication, marking, maintenance, recondition, repair, or testing of a packaging or container represented, marked, certified, or sold as qualified for use in transporting hazardous material.

This final rule addresses covered subject item 3 above and preempts state, local, and Indian tribe requirements not meeting the ''substantively the same'' standard. This final rule is necessary to assure that the HMR requirements for retention of shipping papers are consistent with Federal hazardous materials transportation law.

Federal hazardous materials transportation law provides at § 5125(b)(2) that, if DOT issues a regulation concerning any of the covered subjects, DOT must determine and publish in the **Federal Register** the effective date of federal preemption. The effective date may not be earlier than the 90th day following the date of issuance of the final rule and not later than two years after the date of issuance. The effective date of federal preemption of this final rule is 90 days from publication of this final rule in the **Federal Register**.

C. Executive Order 13175

This final rule has been analyzed in accordance with the principles and criteria contained in Executive Order 13175 (''Consultation and Coordination with Indian Tribal Governments''). Because this final rule does not have tribal implications, does not impose substantial direct compliance costs, and is required by statute, the funding and consultation requirements of Executive Order 13175 do not apply.

D. Regulatory Flexibility Act

The Regulatory Flexibility Act (5 U.S.C. 601 *et seq.*) requires an agency to assess the impact of its regulations on small entities unless the agency determines that a rule is not expected to have a significant impact on a substantial number of small entities. This final rule implements a statutory requirement that has been in effect since 1994. This final rule will not impose additional costs on offerors and carriers of hazardous material. I hereby certify that, while the final rule applies to a substantial number of small entities, there will not be a significant economic impact on those small businesses.

E. Unfunded Mandates Reform Act of 1995

This final rule imposes no mandates and thus does not impose unfunded mandates under the Unfunded Mandates Reform Act of 1995.

F. Paperwork Reduction Act

Under the Paperwork Reduction Act of 1995, no person is required to respond to an information collection unless it displays a valid OMB control number. No new burdens are proposed under this final rule. RSPA has a current information collection approval under OMB No. 2137–0034, ''Shipping Papers and Emergency Response Information'' which includes the shipping paper retention requirement in the burden estimates.

G. Regulation Identifier Number (RIN)

A regulation identifier number (RIN) is assigned to each regulatory action listed in the Unified Agenda of Federal Regulations. The Regulatory Information Service Center publishes the Unified Agenda in April and October of each year. The RIN number contained in the heading of this document can be used to cross-reference this action with the Unified Agenda.

H. Environmental Assessment

This final rule does not affect packaging or hazard communication requirements for shipments of hazardous materials transported in commerce. We find that there are no significant environmental impacts associated with this final rule.

List of Subjects

49 CFR Part 172

Hazardous materials transportation, Hazardous waste, Labeling, Markings, Packaging and containers, Reporting and recordkeeping requirements.

49 CFR Part 174

Hazardous materials transportation, Radioactive materials, Railroad safety.

49 CFR Part 175

Air Carriers, Hazardous materials transportation, Radioactive materials, Reporting and recordkeeping requirements.

49 CFR Part 176

Hazardous materials transportation, Maritime carriers, Radioactive materials, Reporting and recordkeeping requirements.

49 CFR Part 177

Hazardous materials transportation, Motor carriers, Radioactive materials, Reporting and recordkeeping requirements.

In consideration of the foregoing, we are amending 49 CFR Parts 172, 174, 175, 176, and 177, as follows:

PART 172—HAZARDOUS MATERIALS TABLE, SPECIAL PROVISIONS, HAZARDOUS MATERIALS COMMUNICATIONS, EMERGENCY RESPONSE INFORMATION, AND TRAINING REQUIREMENTS

1. The authority citation for part 172 continues to read as follows:

Authority: 49 U.S.C. 5101–5127; 49 CFR 1.53.

2. In § 172.201, the section heading is revised and a new paragraph (e) is added to read as follows:

§ 172.201 Preparation and retention of shipping papers

* * * * *

(e) Each person who provides the shipping paper must retain a copy of the shipping paper required by § 172.200(a), or an electronic image thereof, that is accessible at or through its principal place of business and must make the shipping paper immediately available, upon request, to an authorized official of a Federal, State, or local government

agency at reasonable times and locations. For a hazardous waste, the shipping paper copy must be retained for three years after the material is accepted by the initial carrier. For all other hazardous materials, the shipping paper copy must be retained for 375 days after the material is accepted by the initial carrier. Each shipping paper copy must include the date of acceptance by the initial carrier, except that, for rail shipments, the date on the shipment waybill or bill of lading may be used in place of the date of acceptance by the initial carrier. A motor carrier (as defined in § 390.5 of Subchapter B of Chapter III of Subtitle B) that uses a shipping paper without change for multiple shipments of a single hazardous material (*i.e.,* one having the same shipping name and identification number) may retain a single copy of the shipping paper, instead of a copy for each shipment made, if the carrier also retains a record of each shipment made, to include shipping name, identification number, quantity transported, and date of shipment.

PART 174—CARRIAGE BY RAIL

3. The authority citation for part 174 continues to read as follows:

Authority: 49 U.S.C. 5101–5127; 49 CFR 1.53.

4. Section 174.24 is revised to read as follows:

§ 174.24 Shipping papers.

(a) A person may not accept a hazardous material for transportation or transport a hazardous material by rail unless that person receives a shipping paper prepared in accordance with part 172 of this subchapter, unless the material is excepted from shipping paper requirements under this subchapter. Only an initial carrier within the United States must receive and retain a copy of the shipper's certification as required by § 172.204 of this subchapter. This section does not apply to a material that is excepted from shipping paper requirements by this subchapter.

(b) Each person receiving a shipping paper required by this section must retain a copy or an electronic image thereof, that is accessible at or through its principal place of business and must make the shipping paper immediately available, upon request, to an authorized official of a Federal, State, or local government agency at reasonable times and locations. For a hazardous waste, each shipping paper copy must be retained for three years after the material is accepted by the initial carrier. For all other hazardous materials, each shipping paper copy must be retained for 375 days after the material is accepted by the initial carrier. Each shipping paper copy must include the date of acceptance by the initial carrier. The date on the shipping paper may be the date a shipper notifies the rail carrier that a shipment is ready for transportation, as indicated on the waybill or bill of lading, as an alternative to the date the shipment is picked up, or accepted, by the carrier.

PART 175—CARRIAGE BY AIRCRAFT

5. The authority citation for part 175 continues to read as follows:

Authority: 49 U.S.C. 5101–5127; 49 CFR 1.53.

6. In § 175.30, paragraph (a)(2) is revised to read as follows:

§ 175.30 Accepting and inspecting shipments

(a) * * *

(1) * * *

(2) Described and certified on a shipping paper prepared in duplicate in accordance with part 172 of this subchapter or as authorized by § 171.11 of this subchapter. Each person receiving a shipping paper required by this section must retain a copy or an electronic image thereof, that is accessible at or through its principal place of business and must make the shipping paper immediately available, upon request, to an authorized official of a federal, state, or local government agency at reasonable times and locations. For a hazardous waste, each shipping paper copy must be retained for three years after the material is accepted by the initial carrier. For all other hazardous materials, each shipping paper copy must be retained for 375 days after the material is accepted by the carrier. Each shipping paper copy must include the date of acceptance by the carrier. Only an initial carrier must receive and retain a copy of the shipper's certification as required by § 172.204 of this subchapter.

* * * * *

PART 176—CARRIAGE BY VESSEL

7. The authority citation for part 176 continues to read as follows:

Authority: 49 U.S.C. 5101–5127; 49 CFR 1.53.

8. Section 176.24 is revised to read as follows:

§ 176.24 Shipping papers

(a) A person may not accept a hazardous material for transportation or transport a hazardous material by vessel unless that person has received a shipping paper prepared in accordance with part 172 of this subchapter, unless the material is excepted from shipping paper requirements under this subchapter.

(b) Each person receiving a shipping paper required by this section must retain a copy or an electronic image thereof, that is accessible at or through its principal place of business and must make the shipping paper immediately available, upon request, to an authorized official of a Federal, State, or local government agency at reasonable times and locations. For a hazardous waste, each shipping paper copy must be retained for three years after the material is accepted by the initial carrier. For all other hazardous materials, each shipping paper copy must be retained for 375 days after the material is accepted by the carrier. Each shipping paper copy must include the date of acceptance by the carrier.

PART 177—CARRIAGE BY PUBLIC HIGHWAY

9. The authority citation for part 177 continues to read as follows:

Authority: 49 U.S.C. 5101–5127; 49 CFR 1.53.

10. In § 177.817, paragraph (a) is revised and new paragraph (f) is added, to read as follows:

§ 177.817 Shipping papers

(a) *General requirements.* A person may not accept a hazardous material for transportation or transport a hazardous material by highway unless that person has received a shipping paper prepared in accordance with part 172 of this subchapter, unless the material is excepted from shipping paper requirements under this subchapter. A carrier may not transport a hazardous material unless it is accompanied by a shipping paper prepared in accordance with part 172 of this subchapter.

* * * * *

(f) *Retention of shipping papers.* Each person receiving a shipping paper required by this section must retain a copy or an electronic image thereof, that is accessible at or through its principal place of business and must make the shipping paper immediately available, upon request, to an authorized official of a Federal, State, or local government agency at reasonable times and locations. For a hazardous waste, the shipping paper copy must be retained

for three years after the material is accepted by the initial carrier. For all other hazardous materials, the shipping paper copy must be retained for 375 days after the material is accepted by the carrier. Each shipping paper copy must include the date of acceptance by the carrier. A motor carrier (as defined in § 390.5 of Subchapter B of Chapter III of Subtitle B) that uses a shipping paper without change for multiple shipments of a single hazardous material (i.e., one having the same shipping name and identification number) may retain a single copy of the shipping paper, instead of a copy for each shipment made, if the carrier also retains a record of each shipment made, to include shipping name, identification number, quantity transported, and date of shipment.

Issued in Washington, DC, on July 8, 2002, under authority delegated in 49 CFR part 1.

Ellen G. Engleman,

Administrator.

[FR Doc. 02–17566 Filed 7–11–02; 8:45 am]

BILLING CODE 4910–60–P

Proposed Rules

Federal Register
Vol. 67, No. 134
Friday, July 12, 2002

This section of the FEDERAL REGISTER contains notices to the public of the proposed issuance of rules and regulations. The purpose of these notices is to give interested persons an opportunity to participate in the rule making prior to the adoption of the final rules.

DEPARTMENT OF TRANSPORTATION

Federal Aviation Administration

14 CFR Part 39

[Docket No. 2002–CE–15–AD]

RIN 2120–AA64

Airworthiness Directives; SOCATA—Groupe AEROSPATIALE Model TBM 700 Airplanes

AGENCY: Federal Aviation Administration, DOT.

ACTION: Notice of proposed rulemaking (NPRM).

SUMMARY: This document proposes to adopt a new airworthiness directive (AD) that would apply to all SOCATA—Groupe AEROSPATIALE (Socata) Model TBM 700 airplanes. This proposed AD would require you to perform a test on the flight control system and adjust the control roll stop if jamming occurs during the test. This proposed AD is the result of mandatory continuing airworthiness information (MCAI) issued by the airworthiness authority for France. The actions specified by this proposed AD are intended to prevent the flight control wheels from traveling beyond normal roll control limits, which could result in the control wheel becoming jammed. Such a condition could lead to reduced or loss of control of the airplane.

DATES: The Federal Aviation Administration (FAA) must receive any comments on this proposed rule on or before August 14, 2002.

ADDRESSES: Submit comments to FAA, Central Region, Office of the Regional Counsel, Attention: Rules Docket No. 2002–CE–15–AD, 901 Locust, Room 506, Kansas City, Missouri 64106. You may view any comments at this location between 8 a.m. and 4 p.m., Monday through Friday, except Federal holidays. You may also send comments electronically to the following address: *9-ACE-7-Docket@faa.gov.* Comments sent electronically must contain ''Docket No. 2002–CE–15–AD'' in the subject line. If you send comments electronically as attached electronic files, the files must be formatted in Microsoft Word 97 for Windows or ASCII text.

You may get service information that applies to this proposed AD from SOCATA Groupe AEROSPATIALE, Customer Support, Aerodrome Tarbes-Ossun-Lourdes, BP 930—F65009 Tarbes Cedex, France; telephone: 011 33 5 62 41 73 00; facsimile: 011 33 5 62 41 76 54; or the Product Support Manager, SOCATA—Groupe AEROSPATIALE, North Perry Airport, 7501 Pembroke Road, Pembroke Pines, Florida 33023; telephone: (954) 893–1400; facsimile: (954) 964–4141. You may also view this information at the Rules Docket at the address above.

FOR FURTHER INFORMATION CONTACT: Karl Schletzbaum, Aerospace Engineer, FAA, Small Airplane Directorate, 901 Locust, Room 301, Kansas City, Missouri 64106; telephone: (816) 329–4146; facsimile: (816) 329–4090.

SUPPLEMENTARY INFORMATION:

Comments Invited

How Do I Comment on This Proposed AD?

The FAA invites comments on this proposed rule. You may submit whatever written data, views, or arguments you choose. You need to include the rule's docket number and submit your comments to the address specified under the caption **ADDRESSES**. We will consider all comments received on or before the closing date. We may amend this proposed rule in light of comments received. Factual information that supports your ideas and suggestions is extremely helpful in evaluating the effectiveness of this proposed AD action and determining whether we need to take additional rulemaking action.

Are There Any Specific Portions of This Proposed AD I Should Pay Attention To?

The FAA specifically invites comments on the overall regulatory, economic, environmental, and energy aspects of this proposed rule that might suggest a need to modify the rule. You may view all comments we receive before and after the closing date of the rule in the Rules Docket. We will file a report in the Rules Docket that summarizes each contact we have with the public that concerns the substantive parts of this proposed AD.

How Can I Be Sure FAA Receives My Comment?

If you want FAA to acknowledge the receipt of your mailed comments, you must include a self-addressed, stamped postcard. On the postcard, write ''Comments to Docket No. 2002–CE–15–AD.'' We will date stamp and mail the postcard back to you.

Discussion

What Events Have Caused This Proposed AD?

The Direction Générale de l'Aviation Civile (DGAC), which is the airworthiness authority for France, recently notified FAA that an unsafe condition may exist on all Socata Model TBM 700 airplanes. The DGAC reports that, during a ground test of the flight control system on one of the affected airplanes, the pilot control wheel became jammed when performing dual actions (e.g., full up and full left) because the control wheel was turned beyond normal roll control travel limits. This was a result of a misadjustment of the roll control.

What Are the Consequences if the Condition Is Not Corrected?

If this condition is not corrected, it could result in the flight control wheels traveling beyond normal roll control limits, which could result in the control wheel becoming jammed. This could lead to reduced or loss of control of the airplane.

Is There Service Information That Applies to This Subject?

Socata has issued Service Bulletin SB 70–095 27, dated November 2001.

What Are the Provisions of This Service Information?

The service bulletin includes procedures for:

—Inspecting the flight control system to determine if jamming occurs; and
—Adjusting the roll control stop to correct this condition.

What Action Did the DGAC Take?

The DGAC classified this service bulletin as mandatory and issued French AD 2001–582(A), dated November 28, 2001, in order to ensure the continued airworthiness of these airplanes in France.

Was This in Accordance With the Bilateral Airworthiness Agreement?

This airplane model is manufactured in France and are type certificated for operation in the United States under the provisions of section 21.29 of the Federal Aviation Regulations (14 CFR 21.29) and the applicable bilateral airworthiness agreement.

Pursuant to this bilateral airworthiness agreement, the DGAC has kept FAA informed of the situation described above.

The FAA's Determination and an Explanation of the Provisions of This Proposed AD

What Has FAA Decided?

The FAA has examined the findings of the DGAC; reviewed all available information, including the service information referenced above; and determined that:

—The unsafe condition referenced in this document exists or could develop on other Socata Model TBM 700 airplanes of the same type design that are on the U.S. registry;

—The actions specified in the previously-referenced service information should be accomplished on the affected airplanes; and

—AD action should be taken in order to correct this unsafe condition.

What Would This Proposed AD Require?

This proposed AD would require you to incorporate the actions in the previously-referenced service bulletin.

What Are the Differences Between This Proposed AD, the Service Information, and the DGAC AD?

The DGAC AD requires inspection, and, if necessary, adjustment prior to further flight after the effective date of the AD. We propose a requirement that you inspect, and, if necessary, adjust within 100 hours time-in-service (TIS) after the effective date of this proposed AD.

We do not have justification to require this action prior to further flight. We use compliance times such as this when we have identified an urgent safety of flight situation. We believe that 100 hours TIS will give the owners or operators of the affected airplanes enough time to have the proposed actions accomplished without compromising the safety of the airplanes.

Cost Impact

How Many Airplanes Would This Proposed AD Impact?

We estimate that this proposed AD affects 133 airplanes in the U.S. registry.

What Would Be the Cost Impact of This Proposed AD on Owners/Operators of the Affected Airplanes?

We estimate the following costs to accomplish the proposed initial inspection:

Labor cost	Parts cost	Total cost per airplane	Total cost on U.S. operators
1 workhour × $60 per hour = $60	None	$60	$60 × 133 = $7,980.

We estimate the following costs to accomplish any necessary modification that would be required based on the results of the proposed inspection. We have no way of determining the number of airplanes that may need such modification:

Labor cost	Parts cost	Total cost per airplane
3 workhours × $60 per hour=$180	None	$180

Regulatory Impact

Would This Proposed AD Impact Various Entities?

The regulations proposed herein would not have a substantial direct effect on the States, on the relationship between the national government and the States, or on the distribution of power and responsibilities among the various levels of government. Therefore, it is determined that this proposed rule would not have federalism implications under Executive Order 13132.

Would This Proposed AD Involve a Significant Rule or Regulatory Action?

For the reasons discussed above, I certify that this proposed action (1) Is not a ''significant regulatory action'' under Executive Order 12866; (2) is not a ''significant rule'' under DOT Regulatory Policies and Procedures (44 FR 11034, February 26, 1979); and (3) if promulgated, will not have a significant economic impact, positive or negative, on a substantial number of small entities under the criteria of the Regulatory Flexibility Act. A copy of the draft regulatory evaluation prepared for this action has been placed in the Rules Docket. A copy of it may be obtained by contacting the Rules Docket at the location provided under the caption **ADDRESSES**.

List of Subjects in 14 CFR Part 39

Air transportation, Aircraft, Aviation safety, Safety.

The Proposed Amendment

Accordingly, under the authority delegated to me by the Administrator, the Federal Aviation Administration proposes to amend part 39 of the Federal Aviation Regulations (14 CFR part 39) as follows:

PART 39—AIRWORTHINESS DIRECTIVES

1. The authority citation for part 39 continues to read as follows:

Authority: 49 U.S.C. 106(g), 40113, 44701.

§ 39.13 [Amended]

2. FAA amends § 39.13 by adding a new airworthiness directive (AD) to read as follows:

SOCATA—GROUPE AEROSPATIALE: Docket No. 2002–CE–15–AD

(a) *What airplanes are affected by this AD?* This AD affects Model TBM 700 airplanes, all serial numbers, that are certificated in any category.

(b) *Who must comply with this AD?* Anyone who wishes to operate any of the airplanes identified in paragraph (a) of this AD must comply with this AD.

(c) *What problem does this AD address?* The actions specified by this AD are intended to prevent the flight control wheels from traveling beyond normal roll control limits, which could result in the control wheel becoming jammed. Such a condition could lead to reduced or loss of control of the airplane.

(d) *What actions must I accomplish to address this problem?* To address this problem, you must accomplish the following:

Actions	Compliance	Procedures
(1) Perform a test of the pilot and right-hand (RH) station control wheels to determine if either control wheels become jammed.	WIthin the next 100 hours time-in-service after the effective date of this AD and thereafter every time the flight control system undergoes maintenance.	In accordance with Socata TBM Aircraft Mandatory Service Bulletin SB 70–095 27, dated November 2001.
(2) Adjust the roll control stops if jamming occurs on either the pilot control wheel or the RH station control wheel during any test required in pargraph (d)(1) of this AD.	Prior to further flight after jamming is found during any test required by paragraph (d)(1) of this AD.	In accordance with Socata TBM Aircraft Mandatory Service Bulletin SB 70–095 27, dated November 2001.

(e) *Can I comply with this AD in any other way?* You may use an alternative method of compliance or adjust the compliance time if:

(1) Your alternative method of compliance provides an equivalent level of safety; and

(2) The Standards Office Manager, Small Airplane Directorate, approves your alternative. Submit your request through an FAA Principal Maintenance Inspector, who may add comments and then send it to the Standards Office Manager.

Note 1: This AD applies to each airplane identified in paragraph (a) of this AD, regardless of whether it has been modified, altered, or repaired in the area subject to the requirements of this AD. For airplanes that have been modified, altered, or repaired so that the performance of the requirements of this AD is affected, the owner/operator must request approval for an alternative method of compliance in accordance with paragraph (e) of this AD. The request should include an assessment of the effect of the modification, alteration, or repair on the unsafe condition addressed by this AD; and, if you have not eliminated the unsafe condition, specific actions you propose to address it.

(f) *Where can I get information about any already-approved alternative methods of compliance?* Contact Karl Schletzbaum, Aerospace Engineer, FAA, Small Airplane Directorate, 901 Locust, Room 301, Kansas City, Missouri 64106; telephone: (816) 329–4146; facsimile: (816) 329–4090.

(g) *What if I need to fly the airplane to another location to comply with this AD?* The FAA can issue a special flight permit under sections 21.197 and 21.199 of the Federal Aviation Regulations (14 CFR 21.197 and 21.199) to operate your airplane to a location where you can accomplish the requirements of this AD. No passengers are allowed for this flight.

(h) *How do I get copies of the documents referenced in this AD?* You may get copies of the documents referenced in this AD from SOCATA Groupe AEROSPATIALE, Customer Support, Aerodrome Tarbes-Ossun-Lourdes, BP 930—F65009 Tarbes Cedex, France; telephone: 011 33 5 62 41 73 00; facsimile: 011 33 5 62 41 76 54; or the Product Support Manager, SOCATA Groupe AEROSPATIALE, North Perry Airport, 7501 Pembroke Road, Pembroke Pines, Florida 33023; telephone: (954) 893–1400; facsimile: (954) 964–4141. You may view these documents at FAA, Central Region, Office of the Regional Counsel, 901 Locust, Room 506, Kansas City, Missouri 64106.

Note 2: The subject of this AD is addressed in French AD 2001–582(A), dated November 28, 2001.

Issued in Kansas City, Missouri, on July 8, 2002.

Michael Gallagher,

Manager, Small Airplane Directorate, Aircraft Certification Service.

[FR Doc. 02–17600 Filed 7–11–02; 8:45 am]

BILLING CODE 4910–13–P

DEPARTMENT OF TRANSPORTATION

Federal Aviation Administration

14 CFR Part 39

[Docket No. 2001–NM–192–AD]

RIN 2120–AA64

Airworthiness Directives; Boeing Model 757–200 Series Airplanes

AGENCY: Federal Aviation Administration, DOT.

ACTION: Notice of proposed rulemaking (NPRM).

SUMMARY: This document proposes the adoption of a new airworthiness directive (AD) that is applicable to certain Boeing Model 757–200 series airplanes. This proposal would require repetitive inspections for fatigue cracking of certain areas of the forward and aft frames of the cargo doors and repair, if necessary. This action is necessary to find and fix such cracking, which could lead to rapid depressurization of the airplane and result in reduced structural integrity of the cargo doorway. This action is intended to address the identified unsafe condition.

DATES: Comments must be received by August 26, 2002.

ADDRESSES: Submit comments in triplicate to the Federal Aviation Administration (FAA), Transport Airplane Directorate, ANM–114, Attention: Rules Docket No. 2001–NM–192–AD, 1601 Lind Avenue, SW., Renton, Washington 98055–4056. Comments may be inspected at this location between 9 a.m. and 3 p.m., Monday through Friday, except Federal holidays. Comments may be submitted via fax to (425) 227–1232. Comments may also be sent via the Internet using the following address: 9-anm-nprmcomment@faa.gov. Comments sent via fax or the Internet must contain ''Docket No. 2001–NM–192–AD'' in the subject line and need not be submitted in triplicate. Comments sent via the Internet as attached electronic files must be formatted in Microsoft Word 97 for Windows or ASCII text.

The service information referenced in the proposed rule may be obtained from Boeing Commercial Airplane Group, P.O. Box 3707, Seattle, Washington 98124–2207. This information may be examined at the FAA, Transport Airplane Directorate, 1601 Lind Avenue, SW., Renton, Washington.

FOR FURTHER INFORMATION CONTACT: Dennis Stremick, Aerospace Engineer, Airframe Branch, ANM–120S, FAA, Seattle Aircraft Certification Office, 1601 Lind Avenue, SW., Renton, Washington 98055–4056; telephone (425) 227–2776; fax (425) 227–1181.

SUPPLEMENTARY INFORMATION:

Comments Invited

Interested persons are invited to participate in the making of the proposed rule by submitting such written data, views, or arguments as they may desire. Communications shall identify the Rules Docket number and be submitted in triplicate to the address specified above. All communications received on or before the closing date for comments, specified above, will be considered before taking action on the proposed rule. The proposals contained in this action may be changed in light of the comments received.

Submit comments using the following format:

- Organize comments issue-by-issue. For example, discuss a request to change the compliance time and a request to change the service bulletin reference as two separate issues.
- For each issue, state what specific change to the proposed AD is being requested.
- Include justification (e.g., reasons or data) for each request.

Comments are specifically invited on the overall regulatory, economic, environmental, and energy aspects of

the proposed rule. All comments submitted will be available, both before and after the closing date for comments, in the Rules Docket for examination by interested persons. A report summarizing each FAA-public contact concerned with the substance of this proposal will be filed in the Rules Docket.

Commenters wishing the FAA to acknowledge receipt of their comments submitted in response to this action must submit a self-addressed, stamped postcard on which the following statement is made: ''Comments to Docket Number 2001–NM–192–AD.'' The postcard will be date stamped and returned to the commenter.

Availability of NPRMs

Any person may obtain a copy of this NPRM by submitting a request to the FAA, Transport Airplane Directorate, ANM–114, Attention: Rules Docket No. 2001–NM–192–AD, 1601 Lind Avenue, SW., Renton, Washington 98055–4056.

Discussion

The FAA has received a report indicating that, during fatigue testing of the fuselage of a Boeing Model 757 series airplane, extensive cracking in the web and inner and outer chords of the number 1 and 2 cargo door frames was found. Subsequent to that testing, several reports were received from operators indicating cracking of the door frames on the number 1 and 2 cargo door frames on other Model 757 series airplanes. Cracking of the frame web was found on four of those airplanes. All of the cracking occurred at, or slightly outboard of, door stop number 6. Inner chord cracking ranged from 0.12 to 3.0 inches, and web cracking ranged from 0.40 inch to completely severed. The airplanes had accumulated between 22,199 and 27,528 flight cycles, and between 32,956 and 55,707 flight hours. Fatigue cracking of the cargo door frames, if not found and fixed, could lead to rapid depressurization of the airplane and result in reduced structural integrity of the cargo doorway.

Related Rulemaking

This proposed AD is related to AD 86–17–05R1, amendment 5714 (52 FR 32534, August 28, 1987), which is applicable to certain Boeing Model 727 series airplanes. That AD requires repetitive inspections for cracking of cargo door frames and repair, if necessary. That AD also provides a modification as terminating action for the forward frame of the number 3 cargo door.

This NPRM proposes similar actions for certain Boeing Model 757–200 series airplanes because the number 3 cargo door is very similar to the number 3 cargo door on Model 727 series airplanes.

Explanation of Relevant Service Information

The FAA has reviewed and approved Boeing Alert Service Bulletin 757–53A0080, dated February 3, 2000, which describes procedures for repetitive detailed and high frequency eddy current inspections for cracking of the cargo door frames, and repair, if necessary. Group 1 and 2 airplanes described in the service bulletin have only number 1 and 2 cargo doors. Group 3 airplanes have an additional number 3 cargo door. The inspections include the frame webs, frame inner and outer chords, bear strap, and skin panels between the upper and lower sills of the cargo door. The service bulletin also describes procedures for detailed inspections for stringers 29R and 24R.

The service bulletin describes procedures for repair of cracking that is confined to the frame webs. The service bulletin specifies contacting Boeing for repair information if any cracking is found in one of the frame chords, the bear strap, or the skin panel adjacent to the cargo doorway, or if damaged areas are outside specified limits. Accomplishment of the actions specified in the service bulletin is intended to adequately address the identified unsafe condition.

Explanation of Requirements of Proposed Rule

Since an unsafe condition has been identified that is likely to exist or develop on other products of this same type design, the proposed AD would require accomplishment of the actions specified in the service bulletin described previously, except as discussed below.

Differences Between This Proposed AD and the Service Information

The compliance times specified in the tables in Section 1.E., Compliance, of the referenced service bulletin identify various inspection thresholds for doing the initial detailed and high frequency eddy current inspections, based on the number of flight cycles the airplane has accumulated (between 27,000 and 30,000). However, we have determined that the inspections required by this proposed AD must be done before the accumulation of 22,000 total flight cycles or within 500 flight cycles after the effective date of the AD, whichever is later. This determination is based on fleet data received from the manufacturer which show that fatigue cracking of the frames on the cargo door occurred on affected airplanes that have accumulated between 22,199 and 27,528 total flight cycles.

Although the service bulletin specifies that the manufacturer may be contacted for disposition of certain repair conditions, this proposed AD would require the repair of those conditions to be accomplished in accordance with a method approved by the FAA, or in accordance with data meeting the type certification basis of the airplane approved by a Boeing Company Designated Engineering Representative who has been authorized by the FAA to make such findings.

Interim Action

This is considered to be interim action. The manufacturer has advised that it currently is developing a modification that will address the unsafe condition identified in this AD. Once this modification is developed, approved, and available, the FAA may consider further rulemaking.

Cost Impact

There are approximately 57 airplanes of the affected design in the worldwide fleet. The FAA estimates that 28 airplanes of U.S. registry would be affected by this proposed AD.

For all airplanes it would take approximately 3 work hours per airplane to do the proposed high frequency eddy current and detailed inspections, at an average labor rate of $60 per work hour. Based on these figures, the cost impact of the inspections proposed by this AD on U.S. operators is estimated to be $5,040, or $180 per airplane, per inspection cycle.

For Group 3 airplanes it would take approximately 1 work hour per airplane to do the proposed additional detailed inspection, at an average labor rate of $60 per work hour. Based on these figures, the cost impact of this proposed inspection on U.S. operators is estimated to be $60 per airplane, per inspection cycle.

The cost impact figures discussed above are based on assumptions that no operator has yet accomplished any of the proposed requirements of this AD action, and that no operator would accomplish those actions in the future if this proposed AD were not adopted. The cost impact figures discussed in AD rulemaking actions represent only the time necessary to perform the specific actions actually required by the AD. These figures typically do not include incidental costs, such as the time required to gain access and close up,

planning time, or time necessitated by other administrative actions.

Regulatory Impact

The regulations proposed herein would not have a substantial direct effect on the States, on the relationship between the national Government and the States, or on the distribution of power and responsibilities among the various levels of government. Therefore, it is determined that this proposal would not have federalism implications under Executive Order 13132.

For the reasons discussed above, I certify that this proposed regulation (1) is not a ''significant regulatory action'' under Executive Order 12866; (2) is not a ''significant rule'' under the DOT Regulatory Policies and Procedures (44 FR 11034, February 26, 1979); and (3) if promulgated, will not have a significant economic impact, positive or negative, on a substantial number of small entities under the criteria of the Regulatory Flexibility Act. A copy of the draft regulatory evaluation prepared for this action is contained in the Rules Docket. A copy of it may be obtained by contacting the Rules Docket at the location provided under the caption **ADDRESSES**.

List of Subjects in 14 CFR Part 39

Air transportation, Aircraft, Aviation safety, Safety.

The Proposed Amendment

Accordingly, pursuant to the authority delegated to me by the Administrator, the Federal Aviation Administration proposes to amend part 39 of the Federal Aviation Regulations (14 CFR part 39) as follows:

PART 39—AIRWORTHINESS DIRECTIVES

1. The authority citation for part 39 continues to read as follows:

Authority: 49 U.S.C. 106(g), 40113, 44701.

§ 39.13 [Amended]

2. Section 39.13 is amended by adding the following new airworthiness directive:

Boeing: Docket 2001–NM–192–AD.

Applicability: Model 757–200 series airplanes, line numbers 1 through 57 inclusive, certificated in any category.

Note 1: This AD applies to each airplane identified in the preceding applicability provision, regardless of whether it has been modified, altered, or repaired in the area subject to the requirements of this AD. For airplanes that have been modified, altered, or repaired so that the performance of the requirements of this AD is affected, the owner/operator must request approval for an alternative method of compliance in accordance with paragraph (c) of this AD. The request should include an assessment of the effect of the modification, alteration, or repair on the unsafe condition addressed by this AD; and, if the unsafe condition has not been eliminated, the request should include specific proposed actions to address it.

Compliance: Required as indicated, unless accomplished previously.

To find and fix fatigue cracking of the cargo door frames, which could lead to rapid depressurization of the airplane and result in reduced structural integrity of the cargo doorway, accomplish the following:

Repetitive Inspections

(a) Before the accumulation of 22,000 total flight cycles or within 500 flight cycles after the effective date of this AD, whichever is later: Do the applicable inspections specified in paragraph (a)(1) and (a)(2) of this AD, per Boeing Alert Service Bulletin 757–53A0080, dated February 3, 2000.

(1) For all airplanes: Do detailed and high frequency eddy current (HFEC) inspections for cracking of the door frames of the number 1 and 2 cargo doors (includes the frame webs, frame inner and outer chords, bear strap, and skin panels between the upper and lower sills of the cargo door). Repeat the detailed inspections every 3,000 flight cycles, and the HFEC inspections every 12,000 flight cycles.

(2) For Group 3 airplanes: Do a detailed inspection for cracking of the door frame of the number 3 cargo door. Repeat the inspection every 3,000 flight cycles.

Note 2: For the purposes of this AD, a detailed inspection is defined as: ''An intensive visual examination of a specific structural area, system, installation, or assembly to detect damage, failure, or irregularity. Available lighting is normally supplemented with a direct source of good lighting at intensity deemed appropriate by the inspector. Inspection aids such as mirror, magnifying lenses, etc., may be used. Surface cleaning and elaborate access procedures may be required.''

Repair

(b) Before further flight, repair any cracking found in the frame webs per Boeing Alert Service Bulletin 757–53A0080, dated February 3, 2000. If any cracking is found in any other area and the service bulletin specifies to contact Boeing for disposition of those repairs, repair per a method approved by the Manager, Seattle Aircraft Certification Office (ACO), FAA; or per data meeting the type certification basis of the airplane approved by a Boeing Company Designated Engineering Representative (DER) who has been authorized by the Manager, Seattle ACO, to make such findings. For a repair method to be approved, the approval must specifically reference this AD.

Note 3: There is no terminating action currently available for the repetitive inspections required by this AD.

Alternative Methods of Compliance

(c) An alternative method of compliance or adjustment of the compliance time that provides an acceptable level of safety may be used if approved by the Manager, Seattle ACO, FAA. Operators shall submit their requests through an appropriate FAA Principal Maintenance Inspector, who may add comments and then send it to the Manager, Seattle ACO.

Note 4: Information concerning the existence of approved alternative methods of compliance with this AD, if any, may be obtained from the Seattle ACO.

Special Flight Permit

(d) Special flight permits may be issued in accordance with sections 21.197 and 21.199 of the Federal Aviation Regulations (14 CFR 21.197 and 21.199) to operate the airplane to a location where the requirements of this AD can be accomplished.

Issued in Renton, Washington, on July 8, 2002.

Vi Lipski,

Manager, Transport Airplane Directorate, Aircraft Certification Service.

[FR Doc. 02–17549 Filed 7–11–02; 8:45 am]

BILLING CODE 4910–13–U

NATIONAL INDIAN GAMING COMMISSION

25 CFR Part 504

RIN 3141–AA04

Classification of Games

AGENCY: National Indian Gaming Commission.

ACTION: Proposed rule withdrawal.

SUMMARY: The National Indian Gaming Commission hereby gives notice that the proposed regulations establishing a formal process for the classification of games published in the **Federal Register** on November 10, 1999, 64 FR 61234, are withdrawn.

DATES: The proposed rule published on November 10, 1999, at 64 FR 61234 is withdrawn as of July 12, 2002.

FOR FURTHER INFORMATION CONTACT: Penny J. Coleman, Deputy General Counsel, NIGC, Suite 9100, 1441 L St. NW., Washington, DC 20005. Telephone: 202–632–7003; and fax, 202–632–7066 (these are not toll-free numbers).

SUPPLEMENTARY INFORMATION:

Background

On October 17, 1988, Congress enacted the Indian Gaming Regulatory Act, 25 U.S.C. 2701–21 (IGRA or Act), creating the National Indian Gaming Commission (NIGC or Commission) and developing a comprehensive framework for the regulation of gaming on Indian lands. The Act establishes three classes of Indian gaming.

''Class I gaming'' means social games played solely for prizes of minimal

value or traditional forms of Indian gaming played in connection with tribal ceremonies or celebrations, 25 U.S.C. 2703(6). Indian tribes regulate Class I gaming exclusively.

''Class II gaming'' means the game of chance commonly known as bingo, whether or not electronic, computer, or other technologic aids are used in connection therewith, including, if played in the same location, pull-tabs, lotto, punch boards, tip jars, instant bingo, and other games similar to bingo, and various card games, 25 U.S.C. 2703 (7)(A). Class II gaming, however, does not include any banking card games, electronic or electromechanical facsimiles of any game of chance or slot machines of any kind, 25 U.S.C. 2703 (7)(B). Tribal governments and the NIGC share regulatory authority over Class II gaming without the involvement of state government.

Class III gaming, on the other hand, may be conducted lawfully only if the state in which the tribe is located and the tribe reach an agreement called a tribal-state compact. For a compact to be effective, the approval of the Secretary of the Interior of the compact terms must be obtained. ''Class III gaming'' includes all forms of gaming that do not constitute Class I or II gaming, 25 U.S.C. 2703 (8). Class III gaming thus includes all other games of chance, including most forms of casino-type gaming, such as slot machines, roulette and pari-mutuel wagering, and banking card games, such as blackjack.

Game classification is the key feature around which the legal and regulatory framework of tribal gaming is centered. Any doubts or confusion as to the proper classification of a game, therefore, will raise serious questions as to the legality of play of a particular game and may subject a gaming operation to an enforcement action. While Congress outlined the basic parameters for the classification of games, the Commission was left the task of defining certain key terms, *see,* 25 U.S.C. 2703(6)–(8), which was completed on April 9, 1992, with the publication of a final rule setting forth the operational definitions, 57 FR 12382.

Notwithstanding the Commission's best efforts to produce clear, comprehensive definitions, issues in relation to the classification of games continued to emerge throughout the 1990's, resulting in a series of disputes between federal, state, and tribal government. Further complicating the situation, these disputes are not readily subject to judicial resolution because courts have generally recognized immunities among such sovereigns against suits by others, *Seminole Tribe* v. *Florida,* 517 U.S. 44 (1996); *Oklahoma Tax Comm'n* v. *Citizen Band Potawatomi Indian Tribe of Oklahoma,* 498 U.S. 505 (1991). Additionally, the United States has occasionally taken positions on the classification of games that federal courts subsequently deemed incorrect, causing substantial consternation among tribes and states and subjecting the government to criticism by the courts. *See United States* v. *162 Megamania Gambling Devices,* 231 F.3d 713 (10th Cir. 2000); *United States* v. *103 Electronic Gambling Devices,* 223 F.3d 1091 (9th Cir. 2000).

The proposed rule represents the Commission's first attempt to confront these difficulties through the establishment of a formal process for the classification of games. In large measure this approach was in response to increases in the volume of disputes related to the classification of games. As this rulemaking effort got underway, decisions in the courts began to make it increasingly clear that some of the Commission's definitions were out of alignment with judicial interpretation of the Act. The definitions pertaining to games featuring the use of technological aids were particularly troublesome. Advances in technology had produced devices that in the view of the Commission blurred the distinction between simple technological aids and electromechanical facsimiles of games of chance, the earlier permissible without a compact, the latter unlawful without a compact. The analytical unanimity of the courts with regard to these cases impressed upon the Commission the need to reexamine its definitional regulations.

Early in 2001, the Commission undertook a thorough reexamination of its definitional regulations. Due to the interrelationship between the definitional rules and the proposed game classification procedural regulation, action on the proposed procedural rule was stayed pending a final determination with regard to the definitions. Having now issued a final rule amending the Commission's definitions for technological aids, electromechanical facsimile, and games similar to bingo, the Commission is now in a position to address the issue of procedure. 67 FR 41166, June 17, 2002.

Currently, there are three methods available to the Commission for addressing the classification of games. One is classification through formal notice and comment rulemaking. While such method produces certainty and finality, the process is slow, cumbersome, and insufficiently nimble to be practical for use on a routine basis. Another method is through the use of advisory opinions prepared and issued by the Commission's Office of General Counsel upon request by an interested party. To date, the Office General Counsel has issued more than thirty such opinions regarding the classification of individual games. These opinions, however, are merely advisory in nature and not the result of formal administrative processes. They are not, thus, entitled to the level of deference that must be accorded to final decisions of the Commission, though the courts have accorded them limited deference in certain circumstances. *United States* v. *162 Megamania Gambling Devices,* 231 F.3d 713, 719, 720, 722–23 (10th Cir. 2000); *see also Diamond Game Enterprises, Inc.* v. *Reno,* 230 F.3d 365 (D.C. Cir. 2000) (relying on Commission's advisory opinion on the Tab Force Validation System).

The third method is through formal administrative enforcement action. These actions may be brought in instances where the Chairman determines that the games offered constitute Class III games and no compact is in place. While such administrative adjudications can provide reliable results, the process is cumbersome, time-consuming and resource-intensive for both the Commission and the affected party. A single enforcement action may be pending for many months or years before the administrative process produces a final agency determination, after which, the matter may be subject to another lengthy proceeding in the federal courts.

The Commission is of the view that none of the three methods presently available is ideal. As a matter of sound public policy as well as in the interest of fairness and due process, a regulated industry ought not to be forced to risk enforcement action in order to obtain a legally binding and judicially reviewable classification opinion from the Commission. Absent a fair, carefully thought-out procedure for classifying games, however, the Commission has no alternative but to follow the status quo, which has been unsatisfactory to all concerned.

The Commission's proposed rule establishing a classification procedure was severely criticized by tribal governments in written comments as well as in the testimony at the hearing on the proposal held January 24, 2000 in Tulsa, Oklahoma. The most vehement criticism was that the rule failed to recognize that the Commission shares responsibility for the regulation of Class

II gaming with tribal governments. Tribal governments, as the primary regulators of Indian gaming, have an important role to play in the classification of games. Many felt that the procedure would exacerbate rather than reduce conflict because the process minimizes the role of tribal gaming commissions in making classification determinations in the first instance.

A second major criticism was that the rule was far too sweeping in that no game, even those games unquestionably falling within the Class II criteria, could be introduced for play without first receiving a classification decision from the Commission. Critics felt that given the large number of Class II games, the Commission would not be able to produce classification decisions in a reasonable or timely fashion. Many felt that the Commission's capacity to produce decisions under the rule would be overwhelmed by the sheer volume of the workload. The Commission itself has concerns in this regard. Grandfathering those games in common play at the time of issuance was considered, but this approach also has its faults and the Commission has yet to discern a way of effecting a workable solution to the myriad of issues involved in resolving this difficulty.

Commenters raised a number of other significant questions, many of which possess great merit. The Commission is particularly sensitive to the concern that its workload capacity could be detrimentally affected. Indeed, classification decisions often present difficult technical issues and the process may be highly time intensive. In some cases, the expense may be substantial. On the other hand, the Commission recognizes that its lack of a uniform process for making gaming classification decisions fosters a climate of uncertainty, exacerbating disputes and increasing the likelihood of long, drawn out litigation.

The Commission recognizes that Congress intended a partnership between it and tribal gaming regulators. IGRA clearly anticipates that tribal and federal regulators must work collaboratively to insure the integrity of Indian gaming. The Commission believes that a middle ground can be found with regard to a formal mechanism for game classification; however, the current proposal does not satisfy this objective.

It is the Commission's view that the proposed rule would have more likely satisfied the concerns of all if there had been greater opportunity for tribal input during its development. The Commission has utilized collaborative processes in rulemaking for a number of years with favorable result. Given the joint system of tribal and federal regulation and the on-going relationship between tribal and federal regulators, the expertise and experience of tribal regulators would have greatly aided the Commission's effort to develop a proposal in better alignment with the concerns and needs of tribal governments and to assist in resolving the problems that remain outstanding. If, at a future time, the Commission reconsiders promulgation of a rule establishing a formal procedure for the classification of games, a tribal advisory committee should be established to advise the Commission as to the nature and content of such rule.

History of the Rulemaking

A proposed rule establishing a process for classification of games was published in the **Federal Register** on November 10, 1999. 64 FR 61234.

Sixty-nine (69) comments were submitted in response to that publication. Comments were initially due on January 10, 2000. On December 27, 1999, the Commission issued a Notice of Extension of Time and Notice of Hearing. Written and oral testimony was submitted to the Commission at a public hearing on January 24, 2000, in Tulsa, Oklahoma. Following the extension, comments were due February 24, 2000.

Notice

The National Indian Gaming Commission (Commission) hereby gives notice that the proposed regulations establishing a formal process for the classification of games published in the **Federal Register** on November 10, 1999, 64 FR 61234, are withdrawn. If, at a future time, the Commission elects to proceed with the promulgation of a rule establishing a formal procedure for the classification of games, it will establish a tribal advisory committee to advise the Commission as to the nature and content of such rule.

Signed this 3rd day of July, 2002.

Elizabeth L. Homer,

Vice-Chair.

Teresa E. Poust,

Commissioner.

Chairman's Dissent

I respectfully dissent from the Commission's statement that attempts to bind a future Commission to establish a formal tribal advisory committee for the creation of a gaming classification rule. I believe strongly that tribal advisory committees are an effective way to obtain tribal input for rulemaking initiatives. Though I would prefer a mechanism that encourages even broader tribal participation in our rulemaking initiatives, I would encourage future Commissions to use tribal advisory committees in rulemaking initiatives. However, I believe that the current Commission simply lacks the power to bind future Commissions to a particular rulemaking process. Future Commissions are free to use the rulemaking approach that allows interested parties to participate in the process and that, ultimately, will produce the best rule under the circumstances.

Montie R. Deer,

Chairman.

[FR Doc. 02–17152 Filed 7–11–02; 8:45 am]

BILLING CODE 7565–01–P

DEPARTMENT OF JUSTICE

Bureau of Prisons

28 CFR Part 549

[BOP–1104–P]

RIN 1120–AB03

Infectious Disease Management: Voluntary and Involuntary Testing

AGENCY: Bureau of Prisons, Justice.

ACTION: Proposed rule.

SUMMARY: In this document, the Bureau of Prisons proposes to revise its regulations on the management of infectious diseases. The changes address the circumstances under which the Bureau conducts voluntary and involuntary testing for HIV, tuberculosis, and other infectious diseases. We intend this amendment to provide for the health and safety of staff and inmates.

DATES: Comments due by September 10, 2002.

ADDRESSES: Submit comments to: Rules Unit, Office of General Counsel, Bureau of Prisons, 320 First Street, NW., Washington, DC 20534.

FOR FURTHER INFORMATION CONTACT: Sarah Qureshi, Office of General Counsel, Bureau of Prisons, phone (202) 307–2105.

SUPPLEMENTARY INFORMATION: The Bureau proposes to revise its regulations on the infectious disease management program (28 CFR, part 549, subpart A). These regulations were published in the **Federal Register** on October 5, 1995 (60 FR 52278) as interim final rules. We received no public comment on that interim rule. We had published an entry in the Unified Regulatory Agenda describing the finalization of that

interim final rule (BOP–1017–F, RIN 1120–AA23). To clarify that this rulemaking is a change to the same interim rules, we are merging that action into this proposed rule.

The Correction Officers Health and Safety Act of 1998 gave the Bureau new statutory authority for conducting HIV tests. Additionally, the Centers for Disease Control (CDC) has issued a variety of recommendations on prevention and control of HIV, Tuberculosis, and other infectious diseases. Consequently, the Bureau is proposing to revise its regulations in accordance with the new statutory authority and in consideration of CDC recommendations.

Currently, Bureau regulations on the management of infectious diseases provide for mandatory HIV testing of a yearly random sample, yearly new commitment sample, new commitment re-test sample, pre-release testing, and clinically indicated testing. Any inmate refusing an order for one of these mandatory HIV testing programs is subject to an incident report for refusing to obey an order. Current regulations do not allow for involuntary HIV testing of an inmate following any intentional or unintentional exposure, when there is a risk of transmission of HIV infection to Bureau employees or other persons in a Bureau institution.

The Correction Officers Health and Safety Act of 1998 provides that each individual convicted of a Federal offense who is sentenced to a period of six months or more is to be tested for HIV, if such individual is determined to be at risk for HIV infection in accordance with the guidelines issued by the Bureau. The act also provides for involuntary HIV testing following any intentional or unintentional exposure when there is a risk of transmission of HIV infection to Bureau employees or other persons in a Bureau institution. Because of this new statutory authority, the Bureau is proposing to amend its regulations to allow involuntary testing in those instances where an inmate refuses to be tested following any intentional or unintentional exposure. The inmate may also be subject to an incident report for refusing to obey an order.

The Bureau will continue to allow an inmate to request to be tested for HIV. Such testing is limited to no more than once per 12-month period, unless the Bureau determines that additional testing is warranted. The Bureau will also continue to provide pre- and post-test counseling, regardless of the test results.

The Bureau is also proposing to amend its regulations on infectious disease management to address testing requirements for tuberculosis (TB). The Bureau's general authority to protect and provide for the safekeeping and care of inmates in Bureau custody (18 U.S.C. 4042(a)) allows us to conduct medical tests as necessary to protect the health of the inmate population. Currently, testing of inmates for TB is conducted in accordance with the recommendations and guidelines published by the Centers for Disease Control (CDC) in 1992. In response to the increased transmission of TB in correctional facilities, the CDC updated and expanded previously published recommendations for preventing and controlling TB in correctional facilities.

Based on these updated recommendations, the Bureau will screen each inmate for TB within two calendar days of initial incarceration. We intend to appropriately treat, isolate and/or protect inmates as a result of exposure in the two-day interim before testing. The Bureau will also conduct follow-up testing for each inmate annually. In addition, the Bureau will screen an inmate for TB when health services staff determine that the inmate may be at risk for infection. An inmate who refuses TB screening may be subject to an incident report for refusing to obey an order. If an inmate refuses PPD skin testing, and there is no contraindication to PPD skin testing, institution medical staff will educate and counsel the inmate regarding the need for such testing in an institutional setting (for example, the need to identify HIV+ inmates who have not received a course of prophylaxis and are at high risk for the development of active tuberculous disease). If an inmate still refuses PPD skin testing despite education and counseling, institution medical staff will test the inmate involuntarily. The intent of this amendment is to control TB among staff and inmates in correctional facilities.

To provide for the protection, safekeeping, and care of inmates in our custody (as required by 18 U.S.C. 4042(a)), we retain, revised for clarity, regulations on diagnostics (549.12(c)); Programming, Duty and Housing Restrictions (549.13); Confidentiality of Information (549.14); and Infectious Disease Training and Preventive Measures (549.15).

Finally, the Bureau is removing provisions in current § 549.13(c)(2) and (3) dealing with medical isolation and quarantining as these are governed by normal medical protocols and do not need to appear in the regulations. Removing these provisions from regulation and retaining them in Bureau policy allows us the flexibility to adhere to ever-changing medical standards and Federal medical guidelines.

Interested persons may participate in this proposed rulemaking by submitting data, views, or arguments in writing to the Rules Unit, Office of General Counsel, Bureau of Prisons, 320 First Street, NW., HOLC Room 754, Washington, DC 20534. Comments received during the comment period will be considered before final action is taken. Comments received after the expiration of the comment period will be considered to the extent practicable. All comments received remain on file for public inspection at the above address. The proposed rule may be changed in light of the comments received. No oral hearings are contemplated.

Executive Order 12866

This rule has been reviewed as a ''significant regulatory action'' under section 3(f) of Executive Order 12866 by the Office of Management and Budget (OMB).

Executive Order 13212

This regulation will not have substantial direct effects on the States, on the relationship between the national government and the States, or on distribution of power and responsibilities among the various levels of government. Therefore, in accordance with Executive Order 13132, it is determined that this rule does not have sufficient federalism implications to warrant the preparation of a Federalism Assessment.

Regulatory Flexibility Act

The Director of the Bureau of Prisons, in accordance with the Regulatory Flexibility Act (5 U.S.C. 605(b)), has reviewed this regulation and by approving it certifies that this regulation will not have a significant economic impact upon a substantial number of small entities for the following reasons: This rule pertains to the correctional management of offenders committed to the custody of the Attorney General or the Director of the Bureau of Prisons, and its economic impact is limited to the Bureau's appropriated funds.

Unfunded Mandates Reform Act of 1995

This rule will not result in the expenditure by State, local and tribal governments, in the aggregate, or by the private sector, of $100,000,000 or more in any one year, and it will not significantly or uniquely affect small governments. Therefore, no actions were deemed necessary under the provisions

of the Unfunded Mandates Reform Act of 1995.

Small Business Regulatory Enforcement Fairness Act of 1996

This rule is not a major rule as defined by § 804 of the Small Business Regulatory Enforcement Fairness Act of 1996. This rule will not result in an annual effect on the economy of $100,000,000 or more; a major increase in costs or prices; or significant adverse effects on competition, employment, investment, productivity, innovation, or on the ability of United States-based companies to compete with foreign-based companies in domestic and export markets.

Plain Language Instructions

We try to write clearly. If you can suggest how to improve the clarity of these regulations, call or write Sarah Qureshi at the address listed above.

List of Subjects in 28 CFR Part 549

Prisoners.

Kathleen Hawk Sawyer,

Director, Bureau of Prisons.

Under rulemaking authority vested in the Attorney General in 5 U.S.C. 552(a) and delegated to the Director, Bureau of Prisons, we amend 28 CFR part 549 as follows.

SUBCHAPTER C—INSTITUTIONAL MANAGEMENT

PART 549—MEDICAL SERVICES

1. Revise the authority citation for 28 CFR part 549 to read as follows:

Authority: 5 U.S.C. 301; 18 U.S.C. 3621, 3622, 3624, 4001, 4005, 4014, 4042, 4045, 4081, 4082, (Repealed in part as to offenses committed on or after November 1, 1987), 4241–4247, 5006–5024 (Repealed October 12, 1984, as to offenses committed after that date), 5039; 28 U.S.C. 509, 510.

2. Revise Subpart A to read as follows:

Subpart A—Infectious Disease Management

Sec.
549.10 Purpose and scope.
549.11 Program responsibility.
549.12 Testing.
549.13 Programming, duty, and housing restrictions.
549.14 Confidentiality of information.
549.15 Infectious disease training and preventive measures.

Subpart A—Infectious Disease Management

§ 549.10 Purpose and scope.

The Bureau will manage infectious diseases in the confined environment of a correctional setting through a comprehensive approach which includes testing, appropriate treatment, prevention, education, and infection control measures.

§ 549.11 Program responsibility.

Each institution's Health Services Administrator (HSA) and Clinical Director (CD) are responsible for the operation of the institution's infectious disease program in accordance with applicable laws and regulations.

§ 549.12 Testing.

(a) *Human Immunodeficiency Virus (HIV).* (1) *Clinically indicated.* The Bureau tests inmates who have sentences of six months or more if health services staff determine, taking into consideration the risk as defined by the Centers for Disease Control guidelines, that the inmate is at risk for HIV infection. If the inmate refuses testing, staff may initiate an incident report for refusing to obey an order.

(2) *Exposure incidents.* The Bureau tests an inmate, regardless of the length of sentence or pretrial status, when there is a significant risk that the inmate transmitted the HIV infection, whether intentionally or unintentionally, to Bureau employees or other non-inmates who are lawfully present in a Bureau institution. Exposure incident testing does not require the inmate's consent.

(3) *Surveillance testing.* The Bureau conducts HIV testing for surveillance purposes as needed. If the inmate refuses testing, staff may initiate an incident report for refusing to obey an order.

(4) *Inmate request.* An inmate may request to be tested. The Bureau limits such testing to no more than one per 12-month period unless the Bureau determines that additional testing is warranted.

(5) *Counseling.* Inmates being tested for HIV are to receive pre- and post-test counseling, regardless of the test results.

(b) *Tuberculosis (TB).* (1) The Bureau screens each inmate for TB (e.g., PPD skin test, medical history, etc.) within two calendar days of initial incarceration.

(2) The Bureau conducts follow-up tests for each inmate annually.

(3) The Bureau will screen an inmate for TB when health services staff determine that the inmate may be at risk for infection.

(4) An inmate who refuses TB screening may be subject to an incident report for refusing to obey an order. If an inmate refuses PPD skin testing, and there is no contraindication to PPD skin testing, then, institution medical staff will test the inmate involuntarily.

(5) The Bureau conducts TB contact investigations following any incident in which inmates or staff may have been exposed to tuberculosis. Inmates will be tested according to paragraph (b)(4) of this section.

(c) *Diagnostics.* The Bureau tests an inmate for an infectious or communicable disease when the test is necessary to verify transmission following exposure to bloodborne pathogens or to infectious body fluid. An inmate who refuses diagnostic testing is subject to an incident report for refusing to obey an order.

§ 549.13 Programming, duty, and housing restrictions.

(a) The CD will assess any inmate with an infectious disease for appropriateness for programming, duty, and housing. Inmates with infectious diseases, that are transmitted through casual contact, will be prohibited from employment in any area, until fully evaluated by a health care provider.

(b) Inmates may be limited in programming, duty, and housing assignments when their infectious disease is transmitted through casual contact. The Warden, in consultation with the CD, may exclude inmates, on a case-by-case basis, from work assignments based upon the security and good order of the institution.

(c) If an inmate tests positive for an infectious disease, that test alone does not constitute sole grounds for disciplinary action. Disciplinary action may be considered when coupled with a secondary action that could lead to transmission of an infectious agent. Inmates testing positive for infectious disease are subject to the same disciplinary policy that applies to all inmates (see 28 CFR part 541, subpart B). Except as provided for in our disciplinary policy, no special or separate housing units may be established for HIV-positive inmates.

§ 549.14 Confidentiality of information.

Any disclosure of test results or medical information is made in accordance with the Privacy Act of 1974 and the HHS Standards for Privacy of Individually Identifiable Health Information promulgated pursuant to the Health Insurance Portability and Accountability Act of 1996. Routine uses of such information maintained by the Bureau in its Privacy Act systems of records include the following:

(a) The HSA will ensure that each institution's respective state health department is informed of all cases of infectious diseases which are required by the state to be reported to the state health department.

(b) For all inmates being released from Bureau custody on parole, supervised

release, placement in a community-based program, furlough, or full-term release, the Warden will send a letter to the Chief, United States Probation Office (USPO) in the district where the inmate is being released if the inmate is known to be HIV seropositive or under treatment for active TB.

(c) If the inmate is being released to a halfway house, a copy of the USPO letter will be forwarded to the appropriate Community Corrections Manager (CCM). The CCM will notify the Director of the halfway house (if applicable).

(d) The HSA will notify the Immigration and Naturalization Service (INS) of any inmate testing HIV positive or who is under treatment for *active* TB who is to be released to an INS detainer.

§ 549.15 Infectious disease training and preventive measures.

(a) The HSA will ensure that a qualified health care professional provides training, incorporating a question-and-answer session, about infectious diseases to all newly committed inmates, during Admission and Orientation.

(b) Inmates in work assignments which staff determine to present the potential for occupational exposure to blood or infectious body fluids will receive annual training on prevention of work-related exposures and will be offered vaccination for Hepatitis B.

[FR Doc. 02–17564 Filed 7–11–02; 8:45 am]

BILLING CODE 4410–05–P

ENVIRONMENTAL PROTECTION AGENCY

40 CFR Part 261

[SW–FRL–7245–1]

Hazardous Waste Management System; Identification and Listing of Hazardous Waste; Proposed Exclusion

AGENCY: Environmental Protection Agency (EPA).

ACTION: Proposed rule and request for comment.

SUMMARY: The EPA is proposing to use the Delisting Risk Assessment Software (DRAS) in the evaluation of a delisting petition. Based on waste-specific information provided by the petitioner, EPA is proposing to use the DRAS to evaluate the impact of the petitioned waste on human health and the environment.

The EPA is also proposing to grant a petition submitted by Tokusen USA, Inc. (Tokusen) to exclude (or delist) a certain solid waste generated by its Conway, Arkansas, facility from the lists of hazardous wastes.

The Agency bases its proposed decision to grant the petition on an evaluation of waste-specific information provided by the petitioner. This proposed decision, if finalized, would exclude the petitioned waste from the requirements of hazardous waste regulations under the Resource Conservation and Recovery Act (RCRA).

If finalized, we would conclude that Tokusen's petitioned waste is nonhazardous with respect to the original listing criteria and that the dewatered sludge generated from the on-site Wastewater Treatment Plant (WWTP) and not from a manufacturing process will substantially reduce the likelihood of migration of constituents from this waste. We would also conclude that their process minimizes short-term and long-term threats from the petitioned waste to human health and the environment.

DATES: We will accept comments until August 26, 2002. We will stamp comments received after the close of the comment period as late. These late comments may not be considered in formulating a final decision. Your requests for a hearing must reach EPA by July 29, 2002. The request must contain the information prescribed in 40 CFR 260.20(d).

ADDRESSES: Please send three copies of your comments. You should send two copies to the Section Chief of the Delisting Section, Multimedia Planning and Permitting Division (6PD-O), Environmental Protection Agency, 1445 Ross Avenue, Dallas, Texas 75202. You should send a third copy to Ali Dorobati, Hazardous Waste Division, Active Sites Branch, Arkansas Department of Environmental Quality (ADEQ), P.O. Box 8913, Little Rock, Arkansas, 72219–8913. Identify your comments at the top with this regulatory docket number: ''F–02–ARDEL–TOKUSEN.''

You should address requests for a hearing to the Director, Carl Edlund, Multimedia Planning and Permitting Division (6PD), Environmental Protection Agency, 1445 Ross Avenue, Dallas, Texas 75202.

FOR FURTHER INFORMATION CONTACT: Larry K. Landry (214) 665–8134.

SUPPLEMENTARY INFORMATION: The information in this section is organized as follows:

I. Overview Information
- A. What action is EPA proposing?
- B. Why is EPA proposing to approve this delisting?
- C. How will Tokusen manage the waste if it is delisted?
- D. When would the EPA finalize the delisting?
- E. How would this action affect the states?

II. Background
- A. What is the history of the delisting program?
- B. What is a delisting petition, and what does it require of a petitioner?
- C. What factors must EPA consider in deciding whether to grant a delisting petition?

III. EPA's Evaluation of the Waste Information and Data
- A. What wastes did Tokusen petition EPA to delist?
- B. What is Tokusen and how did it generate this waste?
- C. What information and analyses did Tokusen submit to support its petition?
- D. What were the results of Tokusen's analysis?
- E. How did EPA evaluate the risk of delisting this waste?
- F. What other factors did EPA consider?
- G. What is EPA's evaluation of this delisting petition?

IV. Next Steps
- A. With what conditions must the petitioner comply?
- B. What happens if Tokusen violates the terms and conditions?

V. Public Comments
- A. How can I as an interested party submit comments?
- B. How may I review the docket or obtain copies of the proposed exclusions?

VI. Regulatory Impact
VII. Regulatory Flexibility Act
VIII. Paperwork Reduction Act
IX. Unfunded Mandates Reform Act
X. Executive Order 13045
XI. Executive Order 13084
XII. National Technology Transfer and Advancements Act
XIII. Executive Order 13132 Federalism

I. Overview Information

A. What Action Is EPA Proposing?

The EPA is proposing:

(1) to grant Tokusen's petition to have its dewatered WWTP sludge excluded, or delisted, from the definition of a hazardous waste; and

(2) to use a fate and transport model to evaluate the potential impact of the petitioned waste on human health and the environment. The Agency would use this model to predict the concentration of hazardous constituents released from the petitioned waste, once it is disposed.

B. Why Is EPA Proposing To Approve This Delisting?

Tokusen's petition requests a delisting for an F006 listed hazardous waste. Tokusen does not believe that the petitioned waste meets the criteria for which EPA listed it. Tokusen also believes no additional constituents or factors could cause the waste to be hazardous. The EPA's review of this

petition included consideration of the original listing criteria, and the additional factors required by the Hazardous and Solid Waste Amendments of 1984 (HSWA). See section 3001(f) of RCRA, 42 U.S.C. 6921(f), and 40 CFR 260.22 (d)(1)–(4) (hereinafter all sectional references are to 40 CFR unless otherwise indicated). In making the initial delisting determination, EPA evaluated the petitioned waste against the listing criteria and factors cited in §§ 261.11(a)(2) and (a)(3). Based on this review, the EPA agrees with the petitioner that the waste is nonhazardous with respect to the original listing criteria. (If the EPA had found, based on this review, that the waste remained hazardous based on the factors for which the waste was originally listed, EPA would have proposed to deny the petition.) The EPA evaluated the waste with respect to other factors or criteria to assess whether there is a reasonable basis to believe that such additional factors could cause the waste to be hazardous. The EPA considered whether the waste is acutely toxic, the concentration of the constituents in the waste, their tendency to migrate and to bioaccumulate, their persistence in the environment once released from the waste, plausible and specific types of management of the petitioned waste, the quantities of waste generated, and waste variability. The EPA believes that the petitioned waste does not meet the listing criteria and thus should not be a listed waste. The EPA's proposed decision to delist waste from Tokusen's facility is based on the information submitted in support of this rule, including descriptions of the wastes and analytical data from the Conway, Arkansas facility.

C. How Will Tokusen Manage the Waste if It Is Delisted?

Tokusen currently sends the petitioned waste to Envirite Corporation, a hazardous landfill in Harvey, Illinois. If the delisting exclusion is finalized, Tokusen intends to dispose of the petitioned waste, dewatered WWTP sludge, in a solid waste landfill in Little Rock, Arkansas called Waste Management Industrial Landfill.

D. When Would the EPA Finalize the Delisting?

RCRA section 3001(f) specifically requires EPA to provide notice and an opportunity for comment before granting or denying a final exclusion. Thus, EPA will not grant the exclusion until it addresses all timely public comments (including those at public hearings, if any) on this proposal.

RCRA section 3010(b)(1) at 42 USCA 6930(b)(1), allows rules to become effective in less than six months when the regulated community does not need the six-month period to come into compliance. That is the case here, because this rule, if finalized, would reduce the existing requirements for persons generating hazardous wastes.

The EPA believes that this exclusion should be effective immediately upon final publication because a six-month deadline is not necessary to achieve the purpose of section 3010(b), and a later effective date would impose unnecessary hardship and expense on this petitioner. These reasons also provide good cause for making this rule effective immediately, upon final publication, under the Administrative Procedure Act, 5 U.S.C. 553(d).

E. How Would This Action Affect the States?

Because EPA is issuing this exclusion under the Federal RCRA delisting program, only States subject to Federal RCRA delisting provisions would be affected. This would exclude two categories of States: States having a dual system that includes Federal RCRA requirements and their own requirements, and States who have received authorization from EPA to make their own delisting decisions.

Here are the details: We allow states to impose their own non-RCRA regulatory requirements that are more stringent than EPA's, under section 3009 of RCRA, 42 U.S.C. 6929. These more stringent requirements may include a provision that prohibits a Federally issued exclusion from taking effect in the State. Because a dual system (that is, both Federal (RCRA) and State (non-RCRA) programs) may regulate a petitioner's waste, we urge petitioners to contact the State regulatory authority to establish the status of their wastes under the State law.

The EPA has also authorized some States (for example, Louisiana, Georgia, Illinois) to administer a RCRA delisting program in place of the Federal program, that is, to make State delisting decisions. Therefore, this exclusion does not apply in those authorized States unless that State makes the rule part of its authorized program. If Tokusen transports the petitioned waste to or manages the waste in any State with delisting authorization, Tokusen must obtain delisting authorization from that State before they can manage the waste as nonhazardous in the State.

II. Background

A. What Is the History of the Delisting Program?

The EPA published an amended list of hazardous wastes from nonspecific and specific sources on January 16, 1981, as part of its final and interim final regulations implementing section 3001 of RCRA. The EPA has amended this list several times and published it in §§ 261.31 and 261.32.

We list these wastes as hazardous because: (1) They typically and frequently exhibit one or more of the characteristics of hazardous wastes identified in subpart C of part 261 (that is, ignitability, corrosivity, reactivity, and toxicity) or (2) they meet the criteria for listing contained in §§ 261.11(a)(2) or (a)(3).

Individual waste streams may vary, however, depending on raw materials, industrial processes, and other factors. Thus, while a waste described in these regulations generally is hazardous, a specific waste from an individual facility meeting the listing description may not be hazardous.

For this reason, §§ 260.20 and 260.22 provide an exclusion procedure, called delisting, which allows persons to prove that EPA should not regulate a specific waste from a particular generating facility as a hazardous waste.

B. What Is a Delisting Petition, and What Does It Require of a Petitioner?

A delisting petition is a request from a facility to EPA or an authorized State to exclude wastes from the list of hazardous wastes. The facility petitions the Agency because it does not consider the wastes hazardous under RCRA regulations.

In a delisting petition, the petitioner must show that wastes generated at a particular facility do not meet any of the criteria for which the waste was listed. The criteria for which EPA lists a waste are in part 261 and further explained in the background documents for the listed waste.

In addition, under § 260.22, a petitioner must prove that the waste does not exhibit any of the hazardous waste characteristics (that is, ignitability, reactivity, corrosivity, and toxicity) and present sufficient information for EPA to decide whether factors other than those for which the waste was listed warrant retaining it as a hazardous waste. (See part 261 and the background documents for the listed waste.)

Generators remain obligated under RCRA to confirm whether their waste remains nonhazardous based on the

hazardous waste characteristics even if EPA has ''delisted'' the waste.

C. What Factors Must EPA Consider in Deciding Whether To Grant a Delisting Petition?

Besides considering the criteria in § 260.22(a) and section 3001(f) of RCRA, 42 U.S.C. 6921(f), and in the background documents for the listed wastes, EPA must consider any factors (including additional constituents) other than those for which we listed the waste if a reasonable basis exists that these additional factors could cause the waste to be hazardous.

The EPA must also consider as hazardous waste mixtures containing listed hazardous wastes and wastes derived from treating, storing, or disposing of listed hazardous waste. See §§ 261.3(a)(2)(iii and iv) and (c)(2)(i), called the ''mixture'' and ''derived-from'' rules, respectively. These wastes are also eligible for exclusion and remain hazardous wastes until excluded. See 66 FR 27266 (May 16, 2001).

III. EPA's Evaluation of the Waste Information and Data

A. What Waste Did Tokusen Petition EPA To Delist?

On October 24, 2001, Tokusen petitioned the EPA to exclude from the lists of hazardous waste contained in §§ 261.31 and 261.32, a dewatered WWTP sludge generated from the facility located in Conway, Arkansas. The waste falls under the classification of listed waste because of the ''derived-from'' rule in § 261.3. Specifically, in its petition, Tokusen requested that EPA grant an exclusion for 670 cubic yards of dewatered sludge resulting from its hazardous waste treatment process. The resulting waste is listed, in accordance with the ''derived-from'' rule.

B. What Is Tokusen, and How Did it Generate This Waste?

The Tokusen facility is located in an industrial/commercial setting in the southern portion of the City of Conway, Faulkner County, Arkansas. The 47.25 acre Tokusen property contains a production facility measuring approximately 400,000 square feet in size. Plant process operations at the Tokusen facility are in support of a singular finished product, namely high carbon steel tire cord for use in radial tire manufacturing. The facility operates 24 hours per day, 7 days per week, 365 days per year with the exception of periodic planned shutdowns for routine maintenance.

The Tokusen facility manufactures steel cord used to produce steel belted radial tires. The steel cord is produced from steel rod which has been reduced in size and electroplated with copper and zinc to produce a brass coating. The plant generates four major types of waste and they are process wastewater, F006 dewatered WWTP sludge, sanitary sewage and other solid waste (rod wrappers, lube sludge, soap dust and other solids). The petitioned waste is generated from the wastewater treatment plant and not from the manufacturing process. The electroplating units which contribute wastewater to the WWTP are the copper and zinc electroplating baths. The waste code of the petitioned waste is EPA Hazardous Waste No. F006. The constituents of concern for F006 are cadmium, hexavalent chromium, nickel, and cyanide (complexed).

C. What Information and Analyses Did Tokusen Submit to Support its Petition?

To support its petition, Tokusen submitted:

(1) Historical information on past waste generation and management practices;

(2) Results of the total constituent list for 40 CFR Part 264 Appendix IX volatiles, semivolatiles, metals, pesticides, herbicides, dioxins and PCBs;

(3) Results of the constituent list for Appendix IX on Toxicity Characteristic Leaching Procedure (TCLP) extract for volatiles, semivolatiles, and metals;

(4) Analytical constituents of concern for F006;

(5) Results from total oil and grease analyses;

(6) Multiple pH testing for the petitioned waste.

D. What Were the Results of Tokusen's Analyses?

The EPA believes that the descriptions of the Tokusen analytical characterization provide a reasonable basis to grant Tokusen's petition for an exclusion of the dewatered WWTP sludge. The EPA believes the data submitted in support of the petition show the dewatered WWTP sludge is non-hazardous. Analytical data for the dewatered WWTP sludge samples were used in the DRAS. The data summaries for detected constituents are presented in Table I. The EPA has reviewed the sampling procedures used by Tokusen and has determined they satisfy EPA criteria for collecting representative samples of the variations in constituent concentrations in the dewatered WWTP sludge. The data submitted in support of the petition show that constituents in Tokusen's waste are presently below health-based levels used in the delisting decision-making. The EPA believes that Tokusen has successfully demonstrated that the dewatered WWTP sludge is non-hazardous.

TABLE I.—MAXIMUM TOTAL AND TCLP CONSTITUENT CONCENTRATIONS OF THE DEWATERED WWTP SLUDGE [1]

Constituent	Total constituent analyses (mg/kg)	TCLP leachate Concentration (mg/l)
Antimony	1.27	*0.5
Arsenic	3.32	*0.5
Barium	49	*0.1
Chromium	13	*0.05
Cobalt	2.21	*0.05
Copper	3,190	0.09
Lead	5,130	0.402
Nickel	38.2	1.93
Selenium	4.08	0.0734
Silver	0.174	0.0283
Vanadium	5.67	0.0134
Zinc	21,800	8.94
1,4 Dichlorobenzene	*0.020	0.019

TABLE I.—MAXIMUM TOTAL AND TCLP CONSTITUENT CONCENTRATIONS OF THE DEWATERED WWTP SLUDGE [1]

Constituent	Total constituent analyses (mg/kg)	TCLP leachate Concentration (mg/l)
Hexachlorobutadiene	*0.330	0.120

[1] These levels represent the highest concentration of each constituent found in any one sample. These levels do not necessarily represent the specific levels found in one sample.

* Denotes that the constituent was not detected at the noted detection limit.

E. How Did EPA Evaluate the Risk of Delisting the Waste?

For this delisting determination, EPA used such information gathered to identify plausible exposure routes (i.e., ground water, surface water, air) for hazardous constituents present in the petitioned waste. The EPA determined that disposal in a Subtitle D landfill is the most reasonable, worst-case disposal scenario for Tokusen's petitioned waste. EPA applied the Delisting Risk Assessment Software (DRAS) described in 65 FR 58015 (September 27, 2000) and 65 FR 75637 (December 4, 2000), to predict the maximum allowable concentrations of hazardous constituents that may be released from the petitioned waste after disposal and determined the potential impact of the disposal of Tokusen's petitioned waste on human health and the environment. A copy of this software can be found on the world wide web at *www.epa.gov/earth1r6/6pd/rcra_c/pd-o/dras.htm.* In assessing potential risks to ground water, EPA used the maximum estimated waste volumes and the maximum reported extract concentrations as inputs to the DRAS program to estimate the constituent concentrations in the ground water at a hypothetical receptor well down gradient from the disposal site. Using the risk level (carcinogenic risk of 10^{-5} and non-cancer hazard index of 0.1), the DRAS program can back-calculate the acceptable receptor well concentrations (referred to as compliance-point concentrations) using standard risk assessment algorithms and Agency health-based numbers. Using the maximum compliance-point concentrations and the EPA Composite Model for Leachate Migration with Transformation Products (EPACMTP) fate and transport modeling factors, the DRAS further back-calculates the maximum permissible waste constituent concentrations not expected to exceed the compliance-point concentrations in groundwater.

The EPA believes that the EPACMTP fate and transport model represents a reasonable worst-case scenario for possible ground water contamination resulting from disposal of the petitioned waste in a landfill, and that a reasonable worst-case scenario is appropriate when evaluating whether a waste should be relieved of the protective management constraints of RCRA Subtitle C. The use of some reasonable worst-case scenarios resulted in conservative values for the compliance-point concentrations and ensures that the waste, once removed from hazardous waste regulation, will not pose a significant threat to human health or the environment.

The DRAS also uses the maximum estimated waste volumes and the maximum reported total concentrations to predict possible risks associated with releases of waste constituents through surface pathways (e.g., volatilization or wind-blown particulate from the landfill). As in the above ground water analyses, the DRAS uses the risk level, the health-based data and standard risk assessment and exposure algorithms to predict maximum compliance-point concentrations of waste constituents at a hypothetical point of exposure. Using fate and transport equations, the DRAS uses the maximum compliance-point concentrations and back-calculates the maximum allowable waste constituent concentrations (or ''delisting levels'').

In most cases, because a delisted waste is no longer subject to hazardous waste control, EPA is generally unable to predict, and does not presently control, how a petitioner will manage a waste after delisting. Therefore, EPA currently believes that it is inappropriate to consider extensive site-specific factors when applying the fate and transport model. The EPA does control the type of unit where the waste is disposed. The waste must be disposed in the type of unit the fate and transport model evaluates.

The EPA also considers the applicability of ground water monitoring data during the evaluation of delisting petitions. In this case, Tokusen has never directly disposed of this material in a solid waste landfill, so no representative data exists. Therefore, EPA has determined that it would be unnecessary to request ground water monitoring data.

The EPA believes that the descriptions of Tokusen's hazardous waste process and analytical characterization provide a reasonable basis to conclude that the likelihood of migration of hazardous constituents from the petitioned waste will be substantially reduced so that short-term and long-term threats to human health and the environment are minimized.

The DRAS results which calculate the maximum allowable concentration of chemical constituents in the waste are presented in Table II. Based on the comparison of the DRAS results and maximum TCLP concentrations found in Table I, the petitioned waste should be delisted because no constituents of concern which tested, are likely to be present or formed as reaction products or by products in Tokusen's waste. In addition, on the basis of explanations and analytical data provided by Tokusen, pursuant to § 260.22, the EPA concludes that the petitioned waste does not exhibit any of the characteristics of ignitability, corrosivity, or reactivity. See §§ 261.21, 261.22, and 261.23, respectively.

F. What Other Factors Did EPA Consider?

During the evaluation of Tokusen's petition, EPA also considered the potential impact of the petitioned waste via non-ground water routes (i.e., air emission and surface runoff). With regard to airborne dispersion in particular, EPA believes that exposure to airborne contaminants from Tokusen's petitioned waste is unlikely. Therefore, no appreciable air releases are likely from Tokusen's waste under any likely disposal conditions. The EPA evaluated the potential hazards resulting from the unlikely scenario of airborne exposure to hazardous constituents released from Tokusen's waste in an open landfill. The results of this worst-case analysis indicated that there is no substantial present or potential hazard to human health and the environment from airborne exposure to constituents from Tokusen's dewatered WWTP sludge. A description of EPA's assessment of the potential impact of Tokusen's waste, regarding airborne dispersion of waste contaminants, is presented in the RCRA

public docket for this proposed rule, F–02–ARDEL–Tokusen.

The EPA also considered the potential impact of the petitioned waste via a surface water route. The EPA believes that containment structures at municipal solid waste landfills can effectively control surface water runoff, as the Subtitle D regulations (See 56 FR 50978, October 9, 1991) prohibit pollutant discharges into surface waters. Furthermore, the concentrations of any hazardous constituents dissolved in the runoff will tend to be lower than the levels in the TCLP leachate analyses reported in this notice due to the aggressive acidic medium used for extraction in the TCLP. The EPA believes that, in general, leachate derived from the waste is unlikely to directly enter a surface water body without first traveling through the saturated subsurface where dilution and attenuation of hazardous constituents will also occur. Leachable concentrations provide a direct measure of solubility of a toxic constituent in water and are indicative of the fraction of the constituent that may be mobilized in surface water as well as ground water.

Based on the reasons discussed above, EPA believes that the contamination of surface water through runoff from the waste disposal area is very unlikely. Nevertheless, EPA evaluated the potential impacts on surface water if Tokusen's waste were released from a municipal solid waste landfill through runoff and erosion. See the RCRA public docket for this proposed rule for further information on the potential surface water impacts from runoff and erosion. The estimated levels of the hazardous constituents of concern in surface water would be well below health-based levels for human health, as well as below EPA Chronic Water Quality Criteria for aquatic organisms (USEPA, OWRS, 1987). The EPA, therefore, concluded that Tokusen's dewatered WWTP sludge is not a present or potential substantial hazard to human health and the environment via the surface water exposure pathway.

G. What Is EPA's Evaluation of This Delisting Petition?

The descriptions of Tokusen's hazardous waste process and analytical characterization, with the proposed verification testing requirements (as discussed later in this notice), provide a reasonable basis for EPA to grant the exclusion. The data submitted in support of the petition show that constituents in the waste are below the maximum allowable leachable concentrations (see Table II). We believe Tokusen's process will substantially reduce the likelihood of migration of hazardous constituents from the petitioned waste. Tokusen's process also minimizes short-term and long-term threats from the petitioned waste to human health and the environment.

Thus, EPA believes we should grant Tokusen an exclusion for the dewatered WWTP sludge. The EPA believes the data submitted in support of the petition show Tokusen's process can render the dewatered WWTP sludge non-hazardous.

We have reviewed the sampling procedures used by Tokusen and have determined they satisfy EPA criteria for collecting representative samples of variable constituent concentrations in the dewatered WWTP sludge. The data submitted in support of the petition show that constituents in Tokusen's waste are presently below the compliance point concentrations used in the delisting decision-making and would not pose a substantial hazard to the environment. The EPA believes that Tokusen has successfully demonstrated that the dewatered WWTP sludge is non-hazardous.

The EPA therefore, proposes to grant an exclusion to Tokusen, in Conway, Arkansas, for the dewatered WWTP sludge described in its petition. The EPA's decision to exclude this waste is based on descriptions of the treatment activities associated with the petitioned waste and characterization of the dewatered WWTP sludge.

If we finalize the proposed rule, the Agency will no longer regulate the petitioned waste under parts 262 through 268 and the permitting standards of part 270.

IV. Next Steps

A. With What Conditions Must the Petitioner Comply?

The petitioner, Tokusen, must comply with the requirements in 40 CFR part 261, appendix IX, Table 1. The text below gives the rationale and details of those requirements.

(1) *Delisting Levels:* This paragraph provides the levels of constituents that Tokusen must test the leachate from the dewatered WWTP sludge, below which these wastes would be considered non-hazardous.

The EPA selected the set of inorganic and organic constituents specified in Paragraph (1) of 40 CFR part 261, appendix IX, Table 1, based on information in the petition. We compiled the inorganic and organic constituents list from the composition of the waste, descriptions of Tokusen's treatment process, previous test data provided for the waste, and the respective health-based levels used in delisting decision-making. These delisting levels correspond to the allowable levels measured in the TCLP extract of the waste.

(2) *Waste Holding and Handling:* The purpose of this paragraph is to ensure that Tokusen manages and disposes of any dewatered WWTP sludge that might contain hazardous levels of inorganic and organic constituents according to Subtitle C of RCRA. Holding the dewatered WWTP sludge until characterization is complete will protect against improper handling of hazardous material. If EPA determines that the data collected under this Paragraph do not support the data provided for in the petition, the exclusion will not cover the petitioned waste. The exclusion is effective when we sign it, but the disposal cannot begin until the verification sampling is completed.

(3) *Verification Testing Requirements:* (A) *Initial Verification Testing:* If the EPA determines that the data from the initial verification period shows the treatment process is effective, Tokusen may request that EPA allow it to conduct verification testing quarterly. If EPA approves this request in writing, then Tokusen may begin verification testing quarterly.

The EPA believes that an initial period of 60 days is adequate for a facility to collect sufficient data to verify that the data provided for the dewatered WWTP sludge, in the 2001 petition, is representative.

If we determine that the data collected under this Paragraph do not support the data provided for the petition, the exclusion will not cover the generated wastes. If the data from the initial verification period demonstrate that the treatment process is effective, Tokusen may request quarterly testing. EPA will notify Tokusen, in writing, if and when they may replace the testing conditions in paragraph(3)(A)with the testing conditions in (3)(B).

(B) *Subsequent Verification Testing:* The EPA believes that the concentrations of the constituents of concern in the dewatered WWTP sludge may vary over time. As a result, to ensure that Tokusen's treatment process can effectively handle any variation in constituent concentrations in the waste, we are proposing a subsequent verification testing condition.

The proposed subsequent testing would verify that Tokusen operates the manufacturing of steel cord as it did during the initial verification testing. It would also verify that the dewatered WWTP sludge do not exhibit

unacceptable levels of toxic constituents.

The EPA is proposing to require Tokusen to analyze representative samples of the dewatered WWTP sludge quarterly during the first year of waste generation. Tokusen would begin quarterly sampling on the anniversary date of the final exclusion as described in paragraph (3)(B).

(C) *Termination of Organic Testing:* The EPA is proposing to end the subsequent testing conditions for organics during the first year in paragraph (1)(C) after Tokusen has demonstrated that the waste consistently meets the delisting levels. Annual testing requires the full list of components in paragraph 1.

If the annual testing of the waste does not meet the delisting requirements in paragraph 1, Tokusen must notify the Agency according to the requirements in paragraph 6. We will take the appropriate actions necessary to protect human health and the environment. The facility must provide sampling results that support the rationale that the delisting exclusion should not be withdrawn.

To confirm that the characteristics of the waste do not change significantly over time, Tokusen must continue to analyze a representative sample of the waste for organic constituents annually. If operating conditions change as described in paragraph (4); Tokusen must reinstate all testing in paragraph (1)(A). They must prove through a new demonstration that their waste meets the conditions of the exclusion. Tokusen must continue organic testing of the dewatered WWTP sludge for the exclusion of that waste.

(4) *Changes in Operating Conditions:* Paragraph (4) would allow Tokusen the flexibility of modifying its processes (for example, changes in equipment or change in operating conditions) to improve its treatment process. However, Tokusen must prove the effectiveness of the modified process and request approval from the EPA. Tokusen must manage wastes generated during the new process demonstration as hazardous waste until they have obtained written approval and paragraph (3) is satisfied.

(5) *Data Submittals:* To provide appropriate documentation that Tokusen's facility is properly treating the waste, Tokusen must compile, summarize, and keep delisting records on-site for a minimum of five years. They should keep all analytical data obtained through Paragraph (3) including quality control information for five years. Paragraph (5) requires that Tokusen furnish these data upon request for inspection by any employee or representative of EPA or the State of Arkansas.

If the proposed exclusion is made final, it will apply only to 670 cubic yards of dewatered WWTP sludge, generated annually at the Tokusen facility after successful verification testing.

We would require Tokusen to file a new delisting petition under any of the following circumstances:

(a) If they significantly alter the manufacturing process treatment system except as described in paragraph (4);

(b) If they use any new manufacturing or production process(es), or significantly change from the current process(es) described in their petition; or

(c) If they make any changes that could affect the composition or type of waste generated.

Tokusen must manage waste volumes greater than 670 cubic yards of dewatered WWTP sludge as hazardous until we grant a new exclusion.

When this exclusion becomes final, Tokusen's management of the wastes covered by this petition would be relieved from Subtitle C jurisdiction. Tokusen must either treat, store, or dispose of the waste in an on-site facility. If not, Tokusen must ensure that it delivers the waste to an off-site storage, treatment, or disposal facility that has a State permit, license, or register to manage municipal or industrial solid waste.

(6) *Reopener:* The purpose of paragraph 6 is to require Tokusen to disclose new or different information related to a condition at the facility or disposal of the waste if it is pertinent to the delisting. Tokusen must also use this procedure, if the waste sample in the annual testing fails to meet the levels found in paragraph 1. This provision will allow EPA to reevaluate the exclusion if a source provides new or additional information to the Agency. The EPA will evaluate the information on which we based the decision to see if it is still correct, or if circumstances have changed so that the information is no longer correct or would cause EPA to deny the petition if presented.

This provision expressly requires Tokusen to report differing site conditions or assumptions used in the petition in addition to failure to meet the annual testing conditions within 10 days of discovery. If EPA discovers such information itself or from a third party, it can act on it as appropriate. The language being proposed is similar to those provisions found in RCRA regulations governing no-migration petitions at § 268.6.

The EPA believes that we have the authority under RCRA and the Administrative Procedures Act (APA), 5 U.S.C. 551 (1978) *et seq.*, to reopen a delisting decision. We may reopen a delisting decision when we receive new information that calls into question the assumptions underlying the delisting.

The Agency believes a clear statement of its authority in delistings is merited in light of Agency experience. See Reynolds Metals Company at 62 FR 37694 and 62 FR 63458 where the delisted waste leached at greater concentrations in the environment than the concentrations predicted when conducting the TCLP, thus leading the Agency to repeal the delisting. If an immediate threat to human health and the environment presents itself, EPA will continue to address these situations case by case. Where necessary, EPA will make a good cause finding to justify emergency rulemaking. *See* APA section 553 (b).

(7) *Notification Requirements:* In order to adequately track wastes that have been delisted, EPA is requiring that Tokusen provide a one-time notification to any State regulatory agency through which or to which the delisted waste is being carried. Tokusen must provide this notification within 60 days of commencing this activity.

B. What Happens if Tokusen Violates the Terms and Conditions?

If Tokusen violates the terms and conditions established in the exclusion, the Agency will start procedures to withdraw the exclusion. Where there is an immediate threat to human health and the environment, the Agency will evaluate the need for enforcement activities on a case-by-case basis. The Agency expects Tokusen to conduct the appropriate waste analysis and comply with the criteria explained above in Condition 1 of the exclusion.

V. Public Comments

A. How Can I as an Interested Party Submit Comments?

The EPA is requesting public comments on this proposed decision. Please send three copies of your comments. Send two copies to Section Chief of the Delisting Section, Multimedia Planning and Permitting Division (6PD–O), Environmental Protection Agency (EPA), 1445 Ross Avenue, Dallas, Texas 75202. Send a third copy to Ali Dorobati, Hazardous Waste Division, Active Sites Branch, Arkansas Department of Environmental Quality (ADEQ), P.O. Box 8913, Little Rock, Arkansas, 72219–8913 Identify your comments at the top with this

regulatory docket number: ''F–02–ARDEL-Tokusen.''

You should submit requests for a hearing to Carl Edlund, Director, Multimedia Planning and Permitting Division (6PD), Environmental Protection Agency, 1445 Ross Avenue, Dallas, Texas 75202.

B. How May I Review the Docket or Obtain Copies of the Proposed Exclusion?

You may review the RCRA regulatory docket for this proposed rule at the Environmental Protection Agency Region 6, 1445 Ross Avenue, Dallas, Texas 75202. It is available for viewing in the EPA Freedom of Information Act Review Room from 9 a.m. to 4 p.m., Monday through Friday, excluding Federal holidays. Call (214) 665–6444 for appointments. The public may copy material from any regulatory docket at no cost for the first 100 pages, and at fifteen cents per page for additional copies.

VI. Regulatory Impact

Under Executive Order 12866, EPA must conduct an ''assessment of the potential costs and benefits'' for all ''significant'' regulatory actions.

The proposal to grant an exclusion is not significant, since its effect, if promulgated, would be to reduce the overall costs and economic impact of EPA's hazardous waste management regulations. This reduction would be achieved by excluding waste generated at a specific facility from EPA's lists of hazardous wastes, thus enabling a facility to manage its waste as nonhazardous.

Because there is no additional impact from this proposed rule, this proposal would not be a significant regulation, and no cost/benefit assessment is required. The Office of Management and Budget (OMB) has also exempted this rule from the requirement for OMB review under Section (6) of Executive Order 12866.

VII. Regulatory Flexibility Act

Under the Regulatory Flexibility Act, 5 U.S.C. 601–612, whenever an agency is required to publish a general notice of rulemaking for any proposed or final rule, it must prepare and make available for public comment a regulatory flexibility analysis which describes the impact of the rule on small entities (that is, small businesses, small organizations, and small governmental jurisdictions). No regulatory flexibility analysis is required, however, if the Administrator or delegated representative certifies that the rule will not have any impact on a small entities.

This rule, if promulgated, will not have an adverse economic impact on small entities since its effect would be to reduce the overall costs of EPA's hazardous waste regulations and would be limited to one facility. Accordingly, I hereby certify that this proposed regulation, if promulgated, will not have a significant economic impact on a substantial number of small entities. This regulation, therefore, does not require a regulatory flexibility analysis.

VIII. Paperwork Reduction Act

Information collection and record-keeping requirements associated with this proposed rule have been approved by the Office of Management and Budget (OMB) under the provisions of the Paperwork Reduction Act of 1980 (Public Law 96–511, 44 U.S.C. 3501 *et seq.*) and have been assigned OMB Control Number 2050–0053.

IX. Unfunded Mandates Reform Act

Under section 202 of the Unfunded Mandates Reform Act of 1995 (UMRA), Public Law 104–4, which was signed into law on March 22, 1995, EPA generally must prepare a written statement for rules with Federal mandates that may result in estimated costs to State, local, and tribal governments in the aggregate, or to the private sector, of $100 million or more in any one year.

When such a statement is required for EPA rules, under section 205 of the UMRA EPA must identify and consider alternatives, including the least costly, most cost-effective, or least burdensome alternative that achieves the objectives of the rule. The EPA must select that alternative, unless the Administrator explains in the final rule why it was not selected or it is inconsistent with law.

Before EPA establishes regulatory requirements that may significantly or uniquely affect small governments, including tribal governments, it must develop under section 203 of the UMRA a small government agency plan. The plan must provide for notifying potentially affected small governments, giving them meaningful and timely input in the development of EPA regulatory proposals with significant Federal intergovernmental mandates, and informing, educating, and advising them on compliance with the regulatory requirements.

The UMRA generally defines a Federal mandate for regulatory purposes as one that imposes an enforceable duty upon state, local, or tribal governments or the private sector.

The EPA finds that this delisting decision is deregulatory in nature and does not impose any enforceable duty on any State, local, or tribal governments or the private sector. In addition, the proposed delisting decision does not establish any regulatory requirements for small governments and so does not require a small government agency plan under UMRA section 203.

X. Executive Order 13045

The Executive Order 13045 is entitled ''Protection of Children from Environmental Health Risks and Safety Risks'' (62 FR 19885, April 23, 1997). This order applies to any rule that EPA determines (1) is economically significant as defined under Executive Order 12866, and (2) the environmental health or safety risk addressed by the rule has a disproportionate effect on children. If the regulatory action meets both criteria, the Agency must evaluate the environmental health or safety effects of the planned rule on children, and explain why the planned regulation is preferable to other potentially effective and reasonably feasible alternatives considered by the Agency. This proposed rule is not subject to Executive Order 13045 because this is not an economically significant regulatory action as defined by Executive Order 12866.

XI. Executive Order 13084

Because this action does not involve any requirements that affect Indian Tribes, the requirements of section 3(b) of Executive Order 13084 do not apply.

Under Executive Order 13084, EPA may not issue a regulation that is not required by statute, that significantly affects or uniquely affects the communities of Indian tribal governments, and that imposes substantial direct compliance costs on those communities, unless the Federal government provides the funds necessary to pay the direct compliance costs incurred by the tribal governments.

If the mandate is unfunded, EPA must provide to the Office Management and Budget, in a separately identified section of the preamble to the rule, a description of the extent of EPA's prior consultation with representatives of affected tribal governments, a summary of the nature of their concerns, and a statement supporting the need to issue the regulation.

In addition, Executive Order 13084 requires EPA to develop an effective process permitting elected and other representatives of Indian tribal governments to have ''meaningful and timely input'' in the development of regulatory policies on matters that significantly or uniquely affect their

communities of Indian tribal governments. This action does not involve or impose any requirements that affect Indian Tribes. Accordingly, the requirements of section 3(b) of Executive Order 13084 do not apply to this rule.

XII. National Technology Transfer and Advancement Act

Under section 12(d) if the National Technology Transfer and Advancement Act, the Agency is directed to use voluntary consensus standards in its regulatory activities unless to do so would be inconsistent with applicable law or otherwise impractical. Voluntary consensus standards are technical standards (e.g., materials specifications, test methods, sampling procedures, business practices, etc.) developed or adopted by voluntary consensus standard bodies. Where available and potentially applicable voluntary consensus standards are not used by EPA, the Act requires that Agency to provide Congress, through the OMB, an explanation of the reasons for not using such standards.

This rule does not establish any new technical standards and thus, the Agency has no need to consider the use of voluntary consensus standards in developing this final rule.

XIII. Executive Order 13132 Federalism

Executive Order 13132, entitled ''Federalism'' (64 FR 43255, August 10, 1999) requires EPA to develop an accountable process to ensure ''meaningful and timely input by State and local officials in the development of regulatory policies that have federalism implications.'' ''Policies that have federalism implications'' is defined in the Executive Order to include regulations that have ''substantial direct effects on the States, on the relationship between the national government and the States, or on the distribution of power and responsibilities among the various levels of government.''

Under section 6 of Executive Order 13132, EPA may not issue a regulation that has federalism implications, that impose substantial direct compliance costs, and that is not required by statute, unless the Federal government provides the funds necessary to pay the direct compliance costs incurred by State and local governments, or EPA consults with State and local officials early in the process of developing the proposed regulation. The EPA also may not issue a regulation that has federalism implications and that preempts State law unless the Agency consults with State and local officials early in the process of developing the proposed regulation.

This action does not have federalism implication. It will not have a substantial direct effect on States, on the relationship between the national government and the States, or on the distribution of power and responsibilities among the various levels of government, as specified in Executive Order 13132, because it affects only one facility.

Lists of Subjects in 40 CFR Part 261

Environmental protection, Hazardous waste, Recycling, Reporting and recordkeeping requirements.

Authority: Sec. 3001(f) RCRA, 42 U.S.C. 6921(f).

Dated: July 2, 2002.

Steve Vargo,

Acting Director, Multimedia Planning & Permitting Division.

For the reasons set out in the preamble, 40 CFR part 261 is proposed to be amended as follows:

PART 261—IDENTIFICATION AND LISTING OF HAZARDOUS WASTE

1. The authority citation for part 261 continues to read as follows:

Authority: 42 U.S.C. 6905, 6912(a), 6921, 6922, and 6938.

2. In Table 1 of appendix IX of part 261 it is proposed to add the following waste stream in alphabetical order by facility to read as follows:

Appendix IX to Part 261—Waste Excluded Under §§ 260.20 and 260.22

TABLE 1.—WASTE EXCLUDED FROM NON-SPECIFIC SOURCES

Facility	Address	Waste description
*	*	*
Tokusen USA, Inc	Conway, AR	Dewatered wastewater treatment plant (WWTP) sludge (EPA Hazardous Waste Nos. F006) generated at a maximum annual rate of 670 cubic yards per calendar year after [insert publication date of the final rule] and disposed in a Subtitle D landfill. For the exclusion to be valid, Tokusen must implement a testing program that meets the following Paragraphs: (1) *Delisting Levels:* All leachable concentrations for those constituents must not exceed the following levels (mg/1). The petitioner must use an acceptable leaching method, for example SW–846, Method 1311 to measure constituents in the waste leachate. Dewatered WWTP sludge (i) Inorganic Constituents Antimony-0.360; Arsenic-0.0654; Barium-51.1; Chromium-5.0; Cobalt-15.7; Copper-7,350; Lead-5.0; Nickel-19.7; Selenium-1.0; Silver-2.68; Vanadium-14.8; Zinc-196. (ii) Organic Constituents 1,4 Dichlorobenzene-3.03; hexachlorobutadiene-0.21. (2) *Waste Holding and Handling:* Tokusen must store the dewatered WWTP sludge as described in its RCRA permit, or continue to dispose of as hazardous all dewatered WWTP sludge generated, until they have completed verification testing described in Paragraph (3)(A) and (B), as appropriate, and valid analyses show that paragraph (1) is satisfied. (B) Levels of constituents measured in the samples of the dewatered WWTP sludge that do not exceed the levels set forth in Paragraph (1) are non-hazardous. Tokusen can manage and dispose the non-hazardous dewatered WWTP sludge according to all applicable solid waste regulations. (C) If constituent levels in a sample exceed any of the delisting levels set in Paragraph (1), Tokusen must retreat the batches of waste used to generate the representative sample until it meets the levels. Tokusen must repeat the analyses of the treated waste.

TABLE 1.—WASTE EXCLUDED FROM NON-SPECIFIC SOURCES—Continued

Facility	Address	Waste description
		(D) If the facility has not treated the waste, Tokusen must manage and dispose the waste generated under Subtitle C of RCRA. (3) *Verification Testing Requirements:* Tokusen must perform sample collection and analyses, including quality control procedures, according to SW–846 methodologies. If EPA judges the process to be effective under the operating conditions used during the initial verification testing, Tokusen may replace the testing required in Paragraph (3)(A) with the testing required in Paragraph (3)(B). Tokusen must continue to test as specified in Paragraph (3)(A) until and unless notified by EPA in writing that testing in Paragraph (3)(A) may be replaced by Paragraph (3)(B). (A) *Initial Verification Testing:* After EPA grants the final exclusion, Tokusen must do the following: (i) Collect and analyze composites of the dewatered WWTP sludge. (ii) Make two composites of representative grab samples collected. (iii) Analyze the waste, before disposal, for all of the constituents listed in Paragraph 1. (iv) Sixty (60) days after this exclusion becomes final, report the operational and analytical test data, including quality control information. (B) *Subsequent Verification Testing:* Following written notification by EPA, Tokusen may substitute the testing conditions in (3)(B) for (3)(A). Tokusen must continue to monitor operating conditions, and analyze representative samples each quarter of operation during the first year of waste generation. The samples must represent the waste generated during the quarter. (C) *Termination of Organic Testing:* (i) Tokusen must continue testing as required under Paragraph (3)(B) for organic constituents in Paragraph (1)(A)(ii), until the analytical results submitted under Paragraph (3)(B) show a minimum of two consecutive samples below the delisting levels in Paragraph (1)(A)(i), Tokusen may then request that EPA stop quarterly organic testing. After EPA notifies Tokusen in writing, the company may end quarterly organic testing. (ii) Following cancellation of the quarterly testing, Tokusen must continue to test a representative composite sample for all constituents listed in Paragraph (1) annually (by twelve months after final exclusion). (4) *Changes in Operating Conditions:* If Tokusen significantly changes the process described in its petition or starts any processes that generate(s) the waste that may or could affect the composition or type of waste generated as established under Paragraph (1) (by illustration, but not limitation, changes in equipment or operating conditions of the treatment process), they must notify EPA in writing; they may no longer handle the wastes generated from the new process as nonhazardous until the wastes meet the delisting levels set in Paragraph (1) and they have received written approval to do so from EPA. (5) *Data Submittals:* Tokusen must submit the information described below. If Tokusen fails to submit the required data within the specified time or maintain the required records on-site for the specified time, EPA, at its discretion, will consider this sufficient basis to reopen the exclusion as described in Paragraph 6. Tokusen must: (A) Submit the data obtained through Paragraph 3 to the Section Chief, Region 6 Delisting Program, EPA, 1445 Ross Avenue, Dallas, Texas 75202–2733, Mail Code, (6PD–O) within the time specified. (B) Compile records of operating conditions and analytical data from Paragraph (3), summarized, and maintained on-site for a minimum of five years. (C) Furnish these records and data when EPA or the State of Arkansas request them for inspection. (D) Send along with all data a signed copy of the following certification statement, to attest to the truth and accuracy of the data submitted: Under civil and criminal penalty of law for the making or submission of false or fraudulent statements or representations (pursuant to the applicable provisions of the Federal Code, which include, but may not be limited to, 18 U.S.C. § 1001 and 42 U.S.C. § 6928), I certify that the information contained in or accompanying this document is true, accurate and complete. As to the (those) identified section(s) of this document for which I cannot personally verify its (their) truth and accuracy, I certify as the company official having supervisory responsibility for the persons who, acting under my direct instructions, made the verification that this information is true, accurate and complete. If any of this information is determined by EPA in its sole discretion to be false, inaccurate or incomplete, and upon conveyance of this fact to the company, I recognize and agree that this exclusion of waste will be void as if it never had effect or to the extent directed by EPA and that the company will be liable for any actions taken in contravention of the company's RCRA and CERCLA obligations premised upon the company's reliance on the void exclusion.

TABLE 1.—WASTE EXCLUDED FROM NON-SPECIFIC SOURCES—Continued

Facility	Address	Waste description
		(6) *Reopener:* (A) If, anytime after disposal of the delisted waste, Tokusen possesses or is otherwise made aware of any environmental data (including but not limited to leachate data or groundwater monitoring data) or any other data relevant to the delisted waste indicating that any constituent identified for the delisting verification testing is at level higher than the delisting level allowed by the Regional Administrator or his delegate in granting the petition, then the facility must report the data, in writing, to the Regional Administrator or his delegate within 10 days of first possessing or being made aware of that data. (B) If the annual testing of the waste does not meet the delisting requirements in Paragraph 1, Tokusen must report the data, in writing, to the Regional Administrator or his delegate within 10 days of first possessing or being made aware of that data. (C) If Tokusen fails to submit the information described in paragraphs (5), (6)(A) or (6)(B) or if any other information is received from any source, the Regional Administrator or his delegate will make a preliminary determination as to whether the reported information requires Agency action to protect human health or the environment. Further action may include suspending, or revoking the exclusion, or other appropriate response necessary to protect human health and the environment. (D) If the Regional Administrator or his delegate determines that the reported information does require Agency action, the Regional Administrator or his delegate will notify the facility in writing of the actions the Regional Administrator or his delegate believes are necessary to protect human health and the environment. The notice shall include a statement of the proposed action and a statement providing the facility with an opportunity to present information as to why the proposed Agency action is not necessary. The facility shall have 10 days from the date of the Regional Administrator or his delegate's notice to present such information. (E) Following the receipt of information from the facility described in paragraph (6)(D) or (if no information is presented under paragraph (6)(D)) the initial receipt of information described in paragraphs (5), (6)(A) or (6)(B), the Regional Administrator or his delegate will issue a final written determination describing the Agency actions that are necessary to protect human health or the environment. Any required action described in the Regional Administrator or his delegate's determination shall become effective immediately, unless the Regional Administrator or his delegate provides otherwise. (7) *Notification Requirements:* Tokusen must do the following before transporting the delisted waste: Failure to provide this notification will result in a violation of the delisting petition and a possible revocation of the decision. (A) Provide a one-time written notification to any State Regulatory Agency to which or through which they will transport the delisted waste described above for disposal, 60 days before beginning such activities. (B) Update the one-time written notification if they ship the delisted waste into a different disposal facility.
*	*	* * * * *

[FR Doc. 02–17458 Filed 7–11–02; 8:45 am]
BILLING CODE 6560–50–P

FEDERAL COMMUNICATIONS COMMISSION

47 CFR Part 73

[DA 02–1551, MB Docket No. 02–178, RM–10456]

Digital Television Broadcast Service; Lewisburg, WV

AGENCY: Federal Communications Commission.

ACTION: Proposed rule.

SUMMARY: The Commission requests comments on a petition filed by High Mountain Broadcasting Corporation, licensee of station WVSX–TV, Lewisburg, West Virginia, proposing the substitution of DTV 8 for DTV channel 48 at Lewisburg. DTV Channel 8 can be allotted to Lewisburg at reference coordinates 37–46–22 N. and 80–42–25 W. with a power of 3.8, a height above average terrain HAAT of 568 meters.

DATES: Comments must be filed on or before August 26, 2002, and reply comments on or before September 10, 2002.

ADDRESSES: The Commission permits the electronic filing of all pleadings and comments in proceeding involving petitions for rule making (except in broadcast allotment proceedings). *See Electronic Filing of Documents in Rule Making Proceedings,* GC Docket No. 97–113 (rel. April 6, 1998). Filings by paper can be sent by hand or messenger delivery, by commercial overnight courier, or by first-class or overnight U.S. Postal Service mail (although we continue to experience delays in receiving U.S. Postal Service mail). The Commission's contractor, Vistronix, Inc., will receive hand-delivered or messenger-delivered paper filings for the Commission's Secretary at 236 Massachusetts Avenue, NE., Suite 110, Washington, DC 20002. The filing hours at this location are 8:00 a.m. to 7:00 p.m. All hand deliveries must be held together with rubber bands or fasteners. Any envelopes must be disposed of before entering the building. Commercial overnight mail (other than U.S. Postal Service Express Mail and Priority Mail) must be sent to 9300 East

Hampton Drive, Capitol Heights, MD 20743. U.S. Postal Service first-class mail, Express Mail, and Priority Mail should be addressed to 445 12th Street, SW, Washington, DC 20554. All filings must be addressed to the Commission's Secretary, Office of the Secretary, Federal Communications Commission, Washington, DC 20554. In addition to filing comments with the FCC, interested parties should serve the petitioner, or its counsel or consultant, as follows: George R. Borsari, Jr., Borsari & Paxson, 4000 Albemarle Street, NW, Suite 100, Washington, DC (Counsel for High Mountain Broadcasting Corporation).

FOR FURTHER INFORMATION CONTACT: Pam Blumenthal, Media Bureau, (202) 418–1600.

SUPPLEMENTARY INFORMATION: This is a synopsis of the Commission's Notice of Proposed Rule Making, MB Docket No. 02–178, adopted June 28, 2002, and released July 5, 2002. The full text of this document is available for public inspection and copying during regular business hours in the FCC Reference Information Center, Portals II, 445 12th Street, SW, Room CY–A257, Washington, DC, 20554. This document may also be purchased from the Commission's duplicating contractor, Qualex International, Portals II, 445 12th Street, SW, Room CY–B402, Washington, DC, 20554, telephone 202–863–2893, facsimile 202–863–2898, or via-e-mail *qualexint@aol.com.*

Provisions of the Regulatory Flexibility Act of 1980 do not apply to this proceeding.

Members of the public should note that from the time a Notice of Proposed Rule Making is issued until the matter is no longer subject to Commission consideration or court review, all *ex parte* contacts are prohibited in Commission proceedings, such as this one, which involve channel allotments. *See* 47 CFR 1.1204(b) for rules governing permissible *ex parte* contacts.

For information regarding proper filing procedures for comments, see 47 CFR 1.415 and 1.420.

List of Subjects in 47 CFR Part 73

Digital television broadcasting, Television.

For the reasons discussed in the preamble, the Federal Communications Commission proposes to amend 47 CFR part 73 as follows:

PART 73—RADIO BROADCAST SERVICES

1. The authority citation for part 73 continues to read as follows:

Authority: 47 U.S.C. 154, 303, 334 and 336.

§73.622 [Amended]

2. Section 73.622(b), the Table of Digital Television Allotments under West Virginia is amended by removing DTV channel 48 and adding DTV channel 8 at Lewisburg.

Federal Communications Commission.

Barbara A. Kreisman,

Chief, Video Division, Media Bureau.

[FR Doc. 02–17486 Filed 7–11–02; 8:45 am]

BILLING CODE 6712–01–P

DEPARTMENT OF TRANSPORTATION

National Highway Traffic Safety Administration

49 CFR Part 571

[Docket No. NHTSA–2002–12538]

RIN 2127–AI84

Federal Motor Vehicle Safety Standards; Low Speed Vehicles; Notice of Proposed Rulemaking

AGENCY: National Highway Traffic Safety Administration (NHTSA), Department of Transportation (DOT).

ACTION: Notice of proposed rulemaking.

SUMMARY: This document responds to a petition for rulemaking from General Motors Corporation concerning low-speed vehicles. A low-speed vehicle is defined as a four-wheeled vehicle, other than a truck, whose maximum speed is between 20 and 25 miles per hour. The petitioner requested that the agency initiate rulemaking to amend the Federal motor vehicle safety standard for low-speed vehicles to require those vehicles to bear a label identifying safety hazards associated with the operation of low-speed vehicles in mixed traffic, *i.e.,* on roads used by regular vehicles, and to be equipped with additional conspicuity features to make low-speed vehicles more visible to other vehicles.

The agency is granting both requests. In this document, the agency is proposing to amend the standard to require low-speed vehicles to bear a warning label to ensure that drivers of those vehicles are alerted to the hazards associated with the operation of low-speed vehicles in mixed traffic. The agency is also proposing that low-speed vehicles be equipped with reflex reflectors or retroreflective conspicuity sheeting, a slow-moving vehicle emblem, and headlamps, taillamps, and side marker lamps that are illuminated while the low-speed vehicle is being operated to enhance their conspicuity.

DATES: You should submit your comments early enough to ensure that Docket Management receives them not later than September 10, 2002.

ADDRESSES: You may submit your comments in writing to: Docket Management, Room PL–401, 400 Seventh Street, SW., Washington, DC 20590. Alternatively, you may submit your comments electronically by logging onto the Docket Management System (DMS) Web site at *http://dms.dot.gov.* Click on ''Help & Information'' or ''Help/Info'' to view instructions for filing your comments electronically. Regardless of how you submit your comments, you should mention the docket number of this document.

FOR FURTHER INFORMATION CONTACT: For technical and policy issues, you may call Richard Van Iderstine, Office of Crash Avoidance Standards, Visibility and Injury Prevention Division (Telephone: 202–366–2720, Fax: 202–493–2739).

For legal issues, you may call Dion Casey, Office of Chief Counsel (Telephone: 202–366–2992, Fax: 202–366–3820).

You may send mail to either of these officials at National Highway Traffic Safety Administration, 400 Seventh Street, SW., Washington, DC 20590.

SUPPLEMENTARY INFORMATION:

Table of Contents

I. Background
II. Petition
III. Discussion and Analysis
  A. Authority to Regulate Anticipated Safety Problems
  B. Safety Problem
IV. Agency Proposal
  A. Summary of the Proposal
  B. Warning Label
  C. Reflex Reflectors or Retroreflective Sheeting
  D. Slow Moving Vehicle Emblem
  E. Side Marker Lamps
  F. Headlamps, Taillamps, and Side Marker Lamps Illuminated While LSV is Being Operated
  G. Notifying State Agencies and Monitoring LSV Usage
  H. Questions on this Proposal
  I. Lead Time
V. Costs
VI. Benefits
VII. Regulatory Analyses

I. Background

In the late 1990s, there was a growing public interest in using golf cars [1] to

[1] These vehicles, referred to variously as ''golf cars,'' ''golf carts,'' or ''neighborhood electric vehicles'' (NEVs), offer a variety of advantages. They are low-cost and energy efficient. Also, since many of these vehicles are electric-powered, they provide quieter transportation that does not pollute the air of the communities in which they are operated.

make short trips for shopping, social, and recreational purposes, primarily within retirement or other planned communities with golf courses. At the time, 12 states had passed legislation authorizing local jurisdictions to permit general on-road use of these vehicles, subject to speed and/or operational limits.[2] A majority of these states conditioned the on-road use of golf cars upon their being equipped with specified safety equipment.

However, the increased use of golf cars on public roads had resulted in several deaths and numerous serious injuries. By 1998, NHTSA estimated that there were an average of 3 deaths and 222 injuries per year as a result of on-road crashes involving golf cars.[3]

In response, NHTSA published a final rule establishing Federal Motor Vehicle Safety Standard No. 500, ''Low-Speed Vehicles.'' (63 FR 33193, June 17, 1998). A ''low-speed vehicle'' is defined as a four-wheeled motor vehicle, other than a truck, whose maximum speed is between 20 and 25 miles per hour. (49 CFR 571.3).[4] Standard No. 500 requires an LSV to be equipped with headlamps, front and rear turn signal lamps, tail lamps, stop lamps, reflex reflectors, exterior and/or interior mirrors, a parking brake, a windshield, a Vehicle Identification Number (VIN), and a seat belt assembly at each designated seating position. (49 CFR 571.500). LSVs do not have to comply with any other Federal motor vehicle safety standards (FMVSSs).

At the time of the final rule, NHTSA anticipated that sales of LSVs would grow, and, as a result, deaths and serious injuries resulting from crashes involving LSVs would occur.[5] The agency also committed to monitor the safety record of LSVs as their use increased, and to consider whether the requirements of Standard No. 500 meet the anticipated safety needs of LSV users.

NHTSA notes that in a September 1, 2000 **Federal Register** notice[6] responding to petitions for reconsideration of the final rule establishing Standard No. 500, the agency decided to treat several of the petitions as petitions for rulemaking. The agency stated: ''We will begin to develop appropriate performance specifications for LSVs, with the intent of proposing and adopting them.''[7]

The agency is not proposing any performance specifications in this document because of time considerations. As noted in the GM petition, some State ZEV mandates, including California's, will take effect this year, potentially causing a rapid increase in the number of LSVs operated on public roadways. In order to address this situation, the agency needed to propose a rule with requirements that could be implemented quickly and easily. The agency believes that the best way to do that is by requiring LSVs to be equipped with additional conspicuity features since such features can be added relatively quickly and easily. However, the agency is continuing to develop performance specifications for LSVs and remains committed to proposing such specifications in the future.

II. Petition

On January 9, 2002, the agency received a petition from General Motors Corporation (GM). GM requested that the agency amend Standard No. 500 to require all low-speed vehicles to be equipped with a label identifying safety hazards associated with the operation of low-speed vehicles in mixed traffic, and additional conspicuity features, such as paint color/markings or roof flags, to make low-speed vehicles more visible to other vehicles. GM also requested that the agency take the following steps related to the safety of LSVs:

(1) Notify state governmental agencies with responsibility for traffic safety of the potential risks associated with increased operation of LSVs on public roadways where they will potentially interact with conventional vehicles at substantial speeds and encourage those state agencies to consider appropriate measures to reduce the potential for harm.

(2) Monitor closely any increased usage of LSVs on public roads for the incidence of collisions and resulting injuries to determine if stronger measures should be incorporated in FMVSS 500 in the future to avoid any unreasonable risk to safety.

In support of its petition, GM noted that LSVs, with a top speed of 25 mph, move much more slowly than conventional motor vehicles.[8] In addition, because they have a much less substantial structure than conventional motor vehicles and thus less crashworthy, safety concerns necessarily arise when LSVs are operated in mixed traffic, *i.e.,* with larger and faster motor vehicles.

GM also noted that in the 1998 final rule establishing Standard No. 500, NHTSA concluded that data available at that time did not support a requirement that LSVs meet the same safety requirements as conventional motor vehicles. The agency reasoned that the volume of LSVs was very small and that the natural market for LSVs seemed to be in places with controlled operating environments, such as gated or planned communities, typically built near golf courses. In addition, at that time the State of California, the largest likely market for LSVs, generally permitted LSVs on public roads only in localities that had adopted golf cart transportation plans, including separate golf cart lanes. At that time, only a few localities had done so.

In its petition, GM stated that circumstances have changed in two relevant ways since the final rule was issued:

> First, the volume of NEVs [neighborhood electric vehicles] is growing substantially as a result of new regulations promulgated in several states. Specifically, NEVs qualify as zero emission vehicles [ZEVs] under state regulations that, if implemented, would mandate that vehicles with no tailpipe emissions be produced and sold as a condition to selling regular cars and trucks in the states that adopt the mandate. Known as the ZEV mandate, this requirement originated in California and is also under consideration in Massachusetts, New York, and Vermont. GM believes that the volume of NEVs in California alone will increase many fold from the current low levels—perhaps to as many as 50,000 units—by the end of 2002 and grown even higher beyond that. To the extent the Northeast states adopt and implement this mandate, the numbers will increase proportionately, even though these states have many fewer operating environments well suited to NEVs. In all four states, the growth in NEV volume will be far greater under the ZEV mandate than natural market forces would foster in the absence of these mandates.

[2] These states were Arizona, California, Colorado, Florida, Georgia, Illinois, Iowa, Minnesota, Nevada, New Mexico, Texas, and Wyoming.

[3] (63 FR 33206, June 17, 1998). The deaths and injuries were estimated for the years 1993 through 1998. Most golf cars are not low speed vehicles as defined in 49 CFR 571.3 because their maximum speed typically is less than 20 mph. However, NHTSA used crash data for golf cars in the final rule because the agency did not have any crash data on low speed vehicles, and because, with the exception of their speed capability, golf cars and LSVs are similar in design.

[4] As noted above, most golf cars are not LSVs because their maximum speed typically is less than 20 mph.

[5] NHTSA does not have any evidence of the number of deaths and injuries that have resulted from crashes between LSVs and conventional motor vehicles since 1998. This is primarily because many States do not require LSVs to be registered as motor vehicles. Thus, NHTSA had no way to track LSVs. The agency has requested that the American Association of Motor Vehicle Administrators (AAMVA), which represents State motor vehicle and law enforcement officials, encourage States to require LSVs to be registered as motor vehicles.

[6] 65 FR 53219.

[7] 65 FR 53221.

[8] GM uses the phrases ''standard vehicles,'' ''regular vehicles,'' and ''conventional vehicles'' to refer to motor vehicles other than LSVs, i.e., motor vehicles that are subject to the relevant Federal motor vehicle safety standards. In this document, the agency will refer to these motor vehicles as ''conventional vehicles.''

Second, states that are likely to experience this proliferation of NEVs have not adopted the prudent restrictions that formerly limited LSVs to separated lanes on roads specifically designated for LSV use as part of specific, locally adopted golf cart transportation plans. In California, a state law enacted in 1999 (the year after NHTSA adopted the current rule) provides that LSVs may be operated on any roads with speed limits up to 35 mph, unless state or local regulators decide to impose tighter restrictions on specific roads.[9] A similar law was passed last year in New York. We are aware of no restrictions that bar LSVs from any roads in Massachusetts or Vermont. Traffic safety statistics show that 48% of vehicle accidents (other than those involving pedestrians and cyclists) occur on roads with posted speeds of 35 mph or less. The risk of injury to LSV occupants is, of course, substantially affected by the differences in speed and mass between the LSV and the other crash vehicle. In a crash between an LSV (with a top speed of 25 mph) and a conventional vehicle traveling at least 10 mph faster, for example, the energy contributed to the crash by the conventional vehicle, ignoring mass difference, will be at minimum nearly 100% greater than the energy contributed by the LSV. When we then take account of the very large mass differences between LSVs and standard vehicles, together with the fact that the actual speed of conventional vehicles on these roads will very often exceed 35 mph, the risks of severe injury or death to LSV occupants grow even larger.

GM claimed that these two new circumstances combine to create a sharply increased risk of injury for LSV occupants unless NHTSA adopts measures to mitigate the risk. GM admitted that it cannot precisely estimate the magnitude of the increased risk for two reasons: (1) because the LSV population is currently small, real world crash statistics involving LSVs are sparse; and (2) it is still too early to know the effect of the state law mandates on the number of LSVs sold. However, GM stated that ''it is clear that a real basis for concern now exists and that the increased risk will be discernible unless effective measures are promptly taken.''

To mitigate the increased risk described above, GM requested that the agency amend Standard No. 500 to require all LSVs to be equipped with a label reading as follows:

WHEN OPERATING VEHICLE ON PUBLIC ROADS

THIS VEHICLE OFFERS MUCH LESS CRASH PROTECTION THAN A REGULAR CAR, VAN, OR TRUCK. THIS MEANS A HIGHER RISK OF INJURY OR DEATH IN COLLISIONS, EVEN AT LOW SPEEDS. The higher the speed of the traffic around you, the higher the risk of injury.

To reduce these risks:

1. Avoid roads with regular traffic, even if the speed limit is low.
2. Whenever possible, stay on roads and lanes limited to low speed vehicles.
3. Wear your safety belt at all times.
4. Avoid operating at night, because your vehicle may be hard for others to see.
5. Never drink and drive.

And, to help avoid rollovers, SLOW DOWN BEFORE MAKING SHARP TURNS.

GM also requested that the agency amend Standard No. 500 to require LSVs to be equipped with additional conspicuity features.[10] GM suggested that the agency require the canopy of LSVs to be painted a certain color, such as bright yellow or chartreuse/neon green, require LSVs to display a colorful flag or banner elevated above the roofline, and/or require LSVs to be equipped with additional plastic reflectors or reflecting tape.

Finally, GM urged the agency to issue these amendments as soon as possible because thousands of additional LSVs could be purchased in the next year or two in at least four states. GM also requested that the agency implement a short phase-in period for these new requirements.

III. Discussion and Analysis

A. Authority To Regulate Anticipated Safety Problems

In the final rule establishing Standard No. 500, NHTSA made it clear that it has the authority to regulate anticipated as well as current safety problems. The agency stated:

NHTSA observes that its authority is preventive in nature. Congress has charged it with issuing standards to protect the public

[9] GM claimed: ''The effect of the California law change is to allow LSVs to use the vast majority of (and in many cases virtually all) non-freeway roads in major California cities such as Los Angeles. This includes major urban and suburban thoroughfares on which vehicles routinely travel 40–50–60 mph notwithstanding posted speed limits of 30–35 mph. The California Highway Patrol foresaw the concern we are raising in its 1999 study on golf cart transportation plans. On page 13, that study states, 'Part of the success of the Palm Desert and Sun City Roseville programs is the constant attention to ensuring safety by separating golf carts from other traffic and pedestrians via lane striping and other measures. Safety may be compromised should programs deviate from this practice and * * * allow golf carts to mix with vehicular traffic on roadways with a speed limit of more than 25 mph. * * *' California Highway Patrol Report to the Legislature, Golf Cart Transportation Plans in California, at 13 (August 1999).''

[10] Currently, Standard No. 500 requires LSVs to be equipped with reflex reflectors: one red on each side of the LSV as far to the rear as practicable, and one red on the rear of the LSV.

against ''unreasonable risk'' of crashes and of deaths and injuries resulting from crashes. 49 U.S.C. 30102(8) and 30111(a). This means that the existence of a risk is sufficient to justify the issuance of standards. If the occurrence of deaths and injuries is reasonably anticipated, NHTSA need not wait until they actually begin to occur in large numbers before taking action to prevent them.

(63 FR 33206, June 17, 1998).

The agency also made it clear that it intended to track any safety problems resulting from the use of LSVs and, if warranted, adjust the standard:

NHTSA will monitor the safety record of LSVs as the use of those vehicles increases. The agency will also consider whether Standard No. 500 meets the anticipated safety needs of LSV users.

(63 FR 33212).

NHTSA believes that it is reasonable to anticipate deaths and injuries resulting from crashes involving LSVs for the following reasons. First, as noted in the GM petition, more States are permitting the operation of LSVs. Second, as explained below, most of these States are not limiting LSV operation to controlled environments or to separate, marked traffic lanes. Instead, they are permitting the operation of LSVs on public roads with speed limits up to 35 mph. Thus, LSVs will be operated in a mixed traffic environment, with much heavier, faster, and aggressive conventional motor vehicles. Third, LSVs offer less crash protection than conventional motor vehicles.

NHTSA does not have any current national sales figures for LSVs. However, Global Electric Motorcars (GEM), the largest U.S. LSV manufacturer, produced more than 5,000 LSVs in 2000.[11] Moreover, NHTSA expects LSVs to be used to meet State Zero Emission Vehicle (ZEV) mandates that, if implemented, would require vehicles with no tailpipe emissions to be produced and sold as a condition of selling conventional motor vehicles in the States that adopt these regulations. Many LSVs would qualify as ZEVs because they are fully electric vehicles powered by batteries. Currently, ZEV mandates are being considered in California, Massachusetts, and New York. In its petition GM stated that if these regulations are implemented, ''GM believes that the volume of [LSVs] in California alone will increase many fold from the current low levels '' to perhaps as many as 50,000 units ''by the end of 2002 and grow even higher beyond that.''

B. Safety Problem

In the 1998 final rule, the agency estimated that there were an average of 3 deaths and 222 injuries per year as a result of on-road crashes involving golf cars.[12] As noted above, golf cars are not LSVs, as defined in 49 CFR 571.3, because their maximum speed typically is less than 20 mph. However, NHTSA used crash data for golf cars in the final rule because the agency did not have any crash data on low speed vehicles, and because, with the exception of their speed capability, golf cars and LSVs are similar in design.

At the time of the final rule, NHTSA anticipated that sales of LSVs would grow, and, as a result, deaths and serious injuries resulting from crashes involving LSVs would occur. As noted above, the agency does not have any information on the number of deaths and fatalities from crashes involving LSVs since 1998. The agency requests comment on this issue.

NHTSA observed in the final rule that it does not have the authority to prescribe the conditions under which LSVs are operated on the public roads; this is the prerogative of State and local jurisdictions. As noted in the GM petition, the State ZEV mandates that have been enacted since the final rule was published probably will substantially increase the sales of LSVs. The agency's review of State laws also indicates that, since the final rule was published, fifteen additional States have enacted laws allowing operation of LSVs on public roads.[13] Those States, the roads on which operation of LSVs is permitted, and the required safety equipment, are listed in the table below. Thirteen of the States specifically allow operation of LSVs on public roads with a posted speed limit of 35 mph or less. One State permits operation of LSVs on public roads with a posted speed limit of 40 mph or less.

State	Roads on which operation is permitted	Required safety equipment
Arizona	Roadways with posted speed limit of 35 mph or less	Headlamps, tail lamps, reflectors, stop lamps, mirror, brakes, and a notice of operational restrictions permanently attached to or painted on the vehicle in a location in clear view of the driver.
Arkansas	Private and public roadways designated by local government to travel to and from a residence to a golf course.	None.
California	Roadways with posted speed limit of 35 mph or less, unless State or local authorities impose restrictions.	Must conform to FMVSS No. 500. Local government may require additional safety devices.
Colorado	Private and public roadways designated by local government.	Headlamps, tail lamps, reflectors, stop lamps, mirror, brakes, and triangular slow-moving vehicle emblem.
Connecticut	Private and public roadways (not highways) designated by local government.	Local government may require safety devices.
Florida	Roadways with posted speed limit of 35 mph or less	Headlamps, stop lamps, turn signal lamps, tail lamps, reflex reflectors, parking brakes, rearview mirrors, windshields, seat belts, and VIN.
Georgia	Private and public roadways designated by local government.	Must comply with motor vehicle equipment requirements.
Hawaii	Roadways with posted speed limit of 35 mph or less	Must display triangular slow moving vehicle emblem and a notice of the vehicle's operational restrictions, and conform to FMVSS No. 500.

[11] ''DaimlerChrysler Corporation to Sell Zero-Emission Neighborhood Electric Vehicles,'' October 23, 2000, available at *http://www.gemcar.com/*.

[12] 63 FR 33206. The deaths and injuries were estimated for the years 1993 through 1998.

[13] As noted above, the twelve states that permitted operation of LSVs on public roads at the time the final rule was published were Arizona, California, Colorado, Florida, Georgia, Illinois, Iowa, Minnesota, Nevada, New Mexico, Texas, and Wyoming. The fifteen states that have enacted laws permitting operation of LSVs on public roads since the final rule was published are Arkansas, Connecticut, Hawaii, Kansas, Maine, Maryland, Michigan, New York, North Carolina, North Dakota, Oklahoma, Oregon, South Carolina, Virginia, and Wisconsin.

State	Roads on which operation is permitted	Required safety equipment
Illinois	Roadways designated by local government	Steering apparatus, rearview mirror, front and rear red reflectorized warning devices, slow moving vehicle emblem, headlight, brake lights, and turn signals.
Iowa	Roadways with posted speed limit of 35 mph or less	Must conform to FMVSS No. 500.
Kansas	Roadways with posted speed limit of 40 mph or less	Must conform to FMVSS No. 500.
Maine	Roadways with posted speed limit of 35 mph or less	Must conform to FMVSS No. 500.
Maryland	In Allegany County only, to cross highways for continued access to any portion of a golf course.	None.
Michigan	Roadways with posted speed limit of 35 mph or less	Headlamps, front and rear turn signal lamps, tail lamps, stop lamps, reflex reflectors, exterior mirror mounted on the driver's side of the vehicle and either an exterior mirror mounted on the passenger's side of the vehicle or an interior mirror, parking brake, windshield, VIN, and seat belt assemblies at each designated seating position.
Minnesota	Roads designated by local government	Slow moving vehicle emblem and a rear view mirror.
Nevada	Roadways with posted speed limit of 35 mph or less	Headlamps, tail lamps, reflectors, stop lamps, mirror, and brakes.
New Mexico	Private and public roadways designated by local government. Carts may not be operated on state highways.	A slow moving vehicle emblem or flashing yellow light.
New York	Public highways with posted speed limit of 35 mph or less	Must conform to FMVSS No. 500.
North Carolina	Roadways with posted speed limit of 35 mph or less	Headlamps, stop lamps, turn signal lamps, tail lamps, reflex reflectors, parking brakes, rearview mirrors, windshields, windshield wipers, speedometer, seat belts, and VIN.
North Dakota	Roadways with posted speed limit of 35 mph or less	Headlamps, front and rear turn signal lamps, tail lamps, stop lamps, reflex reflectors, one red reflector on the rear, brakes, parking brake, windshield, VIN, safety belt installed at each designated seating position, exterior mirror mounted on the operator's side of the vehicle, and either an exterior mirror mounted on the passenger's side of the vehicle or an interior rearview mirror.
Oklahoma	Roadways with posted speed limit of 35 mph or less	Must conform to FMVSS No. 500.
Oregon	Roadways with posted speed limit of 35 mph or less, but local governments may allow operation on city streets or county roads with posted speed limit of more than 35 mph.	None.
South Carolina	Secondary highways and streets within 2 miles of residence during daylight hours.	None.
Texas	Private and public roadways designated by local government.	Slow-moving vehicle emblem.
Virginia	Roadway between residence and golf course if the trip would not be longer than one-half mile in either direction, and the speed limit on the road is no more than 35 mph.	Slow-moving vehicle emblem.
Wisconsin	On public roadways designated by local government to and from a golf course if the distance is one mile or less.	Local government may require reflective devices.
Wyoming	Public streets and roadways designated by local government.	Local government may require safety devices.

In promulgating the final rule establishing Standard No. 500, NHTSA encouraged the States to limit the operation of LSVs to controlled environments, such as gated communities, or, if the States permitted the operation of LSVs on public roads with conventional vehicles, would require LSVs to be operated only in separate, designated lanes. The agency stated:

> The driving environment should be appropriate to the vehicle and its characteristics. Limitation of LSV use to low-speed city and suburban streets is necessary, but [does] not eliminate the safety risks.

(63 FR 33208). The agency then described the operating environment in the City of Palm Desert (California) and urged state and local officials to adopt similar requirements:

> The City of Palm Desert permits on-road use of golf cars in the same lanes as passenger cars and other larger motor vehicles in speed zones posted for speeds up to 25 miles per hour. In speed zones posted for speeds over 25 miles per hour, golf cars may be operated on-road only if there is a lane designated for their use and if the golf car is, in fact, operated within that lane.
>
> * * * * *
>
> NHTSA recognizes that not all operating environments may be as controlled as that of the City of Palm Desert. The agency encourages other states and municipalities to study the features of the City of Palm Desert's plan, and to adopt those features to the extent practicable.

(63 FR 33208).

Based on the above table, the agency notes that the States have not adopted requirements limiting the operation of LSVs to controlled environments. On the contrary, the States seem to be expanding the environment in which they are permitting the operation of LSVs. For example, at the time of the 1998 final rule, California, Iowa, and Nevada permitted LSVs to be operated only on public and private roadways designated by local government. However, in 1999, California enacted a law permitting LSVs to be operated on

any road with a posted speed limit of 35 mph or less, unless State or local authorities impose restrictions; and in 1999 and 2000, Nevada and Iowa, respectively, enacted laws permitting LSVs to be operated on any road with a posted speed limit of 35 mph or less. In 1998, Florida permitted LSVs to be operated only on private and public roadways designated by local governments and in self-contained retirement communities. Currently, however, Florida permits LSVs to be operated on streets where the posted speed limit is 35 mph or less.

Moreover, many States permit LSVs to cross roadways with a posted speed limit greater than 35 mph. For example, Arizona, California, Florida, Hawaii, Iowa, Michigan, Nevada, New York, North Carolina, North Dakota, and Oklahoma permit LSVs to cross roadways with a posted speed limit in excess of 35 mph. Kansas permits LSVs to cross roadways with a posted speed limit in excess of 40 mph.

As noted in the 1998 final rule, the operation of LSVs in an environment with heavier, faster moving vehicles raises obvious safety concerns. Because LSVs are much lighter than conventional vehicles and are not subject to the same Federal motor vehicle safety standards, they are less crashworthy than conventional vehicles. Thus, LSV drivers, especially those unused to the limited acceleration capabilities of LSVs, and passengers will be exposed to a greater risk of injury or death when operating an LSV on roadways with a posted speed limit of 35 mph, or when attempting to cross a roadway with a posted speed limit greater than 35 mph.

Accordingly, the agency anticipates that the increase in the number of States that permit LSVs to operate in mixed vehicular traffic on roadways with a posted speed limit of 35–40 mph or less, and that permit LSVs to cross roadways with a posted speed limit greater than 35–40 mph, may result in more crashes involving LSVs and conventional vehicles.

As noted above, the agency does not have any data on the number of crashes involving LSVs and conventional vehicles. However, the agency notes that LSVs typically weigh from 1,100 to 1,400 pounds, while conventional light vehicles can weigh anywhere from 2,000 to 10,000 pounds. Thus, in a crash between an LSV and a conventional vehicle, the driver of the LSV would be exposed to a greater risk of injury or death.

IV. Agency Proposal

A. Summary of the Proposal

In the final rule establishing Standard No. 500, the agency noted that LSVs must be able to avoid crashes. The agency stated:

> In the mixed motoring environment that will result when LSVs are introduced, crash avoidance will become all the more important. The small LSV must be easily detectable by drivers of larger vehicles.

(63 FR 33208).

Thus, NHTSA determined that the key to minimizing crashes between LSVs and conventional vehicles was enhanced conspicuity of LSVs. The agency described several suggestions to enhance the conspicuity of LSVs made by commenters on the NPRM. One commenter suggested that the agency require LSVs to be equipped with a high-intensity flashing yellow lamp on the rear or top of the LSV. Another recommended that a retroreflective orange triangle be applied to the front and rear of LSVs. However, because the agency hoped that the States would permit the operation of LSVs only in controlled environments,[14] it limited the conspicuity requirements in Standard No. 500 to tail lamps and red reflex reflectors (one on each side and one on the rear of the vehicle).

The agency also believed that drivers of LSVs should be aware of the risks associated with operating an LSV in mixed traffic. The agency stated:

> With respect to the operator, the safety goal is that the driver be familiar with the operating characteristics of the LSV so that he or she may drive appropriately to minimize the possibility of rollover, or hitting a pedestrian or other vehicle.

(63 FR 33208). However, NHTSA did not require LSVs to be equipped with a warning label because the agency hoped that the States would limit the operation of LSVs to controlled environments.

Since the States are permitting more widespread operation of LSVs than NHTSA originally hoped, the agency now believes that a warning label and additional conspicuity requirements may be necessary. Accordingly, the agency is proposing to amend Standard No. 500 to require LSVs to be equipped with a warning label and the following additional conspicuity features: either additional reflex reflectors on the sides and rear of the vehicle, as required for passenger cars by Standard No. 108, ''Lamps, Reflective Devices, and Associated Equipment,'' or retroreflective conspicuity sheeting on the sides and rear of the vehicle, as required by S5.7.1.4.1(a) and S5.7.1.4.2 of Standard No. 108; a slow moving vehicle emblem; and headlamps, taillamps, and side marker lamps that are illuminated while the LSV is being operated.

B. Warning Label

LSVs would have to be equipped with a warning label that reads as follows:

[14] In the final rule, NHTSA stated, ''The driving environment should be appropriate to the vehicle and its characteristics.'' 63 FR 33208 (June 17, 1998). The agency also urged States to adopt features limiting the use of LSVs to controlled environments or to separate, marked traffic lanes. *Id.*

The warning label would have to be permanently affixed in a location that is inside the vehicle and is clearly visible from the driver's seating position. The text area of the label would be no less than 175 cm^2 (27 in^2). The header and footer areas would be yellow with black text, and the message area would be white with black text. The font of the text in the header and footer areas would be not less than 6.25 mm (¼ inch) high, the font of the text in the center of the message area not less than 5 mm (3/16 inch) high, and the font of the text at the sides of the message area not less than 3 mm (⅛ inch) high.

The agency notes that the use of yellow with the word ''warning'' would disagree with American National Standards Institute (ANSI) standards. ANSI standards specify that when the word ''warning'' is used in the heading, the background color should be orange. However, in issuing a 1996 final rule requiring new warning labels for vehicles with air bags,[15] the agency conducted several focus groups to evaluate different warning labels. The agency stated:

Yellow was the overwhelming color preference of the participants in the focus groups. Only two of the 53 participants preferred orange. Participants generally stated that yellow was more eye-catching than orange. Participants also noted that red (stop) and yellow (caution) had meaning to them, but not orange.[16]

The agency also notes that several States require LSVs to be equipped with a notice conveying the operational restrictions of LSVs or the potential risks of driving LSVs to the driver. For example, Arizona and Hawaii require LSVs to have a notice of the operational restrictions applying to the vehicle permanently attached to or painted on the vehicle in a location that is in clear view of the driver.

NHTSA realizes that in these States, the warning label proposed in this document might partially duplicate the State-required notices. However, the agency believes that the proposed warning label would complement the State-required notices to inform LSV drivers both of the operational limitations of LSVs and the risks associated with driving LSVs in mixed traffic. To facilitate compliance with both the Federal and State warning label requirements, NHTSA is proposing to allow the proposed warning label to be combined with similar State-required labels. The agency requests comments from State agencies on these issues.

C. Reflex Reflectors or Retroreflective Sheeting

LSVs would have to be equipped with either reflex reflectors or retroreflective sheeting. If the LSV is equipped with reflex reflectors, the reflex reflectors would have to comply with Table III and Table IV of Standard No. 108 for passenger cars, multipurpose passenger vehicles, trucks, and buses. This would require LSVs to be equipped with four red and two amber reflex reflectors. The reflex reflectors would have to be mounted at a height above the road surface of not less than 15 inches, nor more than 60 inches, and be located as follows: two red reflectors on the rear of the LSV, one on each side of the vertical centerline, at the same height, and as far apart as practicable; one red reflector on each side of the LSV, as far to the rear as practicable; and one amber on each side of the LSV, as far to the front as practicable.

If the LSV is equipped with retroreflective sheeting, the retroreflective sheeting would have to comply with the requirements of

[15] 61 FR 60206 (November 27, 1996), Docket No. 74–14, Notice 103.

[16] 61 FR 60211 (November 27, 1996).

S5.7.1.1 through S5.7.1.3 of Standard No. 108. This would require the retroreflective sheeting to consist of a smooth, flat, transparent exterior film with retroreflective elements embedded or suspended beneath the film so as to form a non-exposed retroreflective optical system. This also would require the retroreflective sheeting to have a width of at least 50 mm and be applied in a pattern of alternating white and red color segments.

The retroreflective sheeting would have to be applied to the sides of LSVs as specified in S5.7.1.4.2 of Standard No. 108 for the side of trailers. This would require a strip of retroreflective sheeting, as horizontal as practicable, to be applied to each side of the LSV. The strip would have to originate and terminate as close as possible to the front and rear of the LSV as practicable. The strip would not have to be continuous as long as not less than half the length of the LSV was covered, and the spaces were distributed as evenly as possible.

The retroreflective sheeting also would have to be applied to the rear of LSVs as specified in S5.7.1.4.1(a) of Standard No. 108 for the rear of trailers. This would require a strip of retroreflective sheeting, as horizontal as practicable, to be applied across the full width of the rear of the LSV. The strip would have to originate and terminate as close to the extreme edges of the LSV as practicable. The strip would have to be located as close as practicable to not less than 375 mm and not more than 1565 mm above the road surface.

Following are drawings of an LSV with reflex reflectors and of an LSV with retroreflective sheeting.

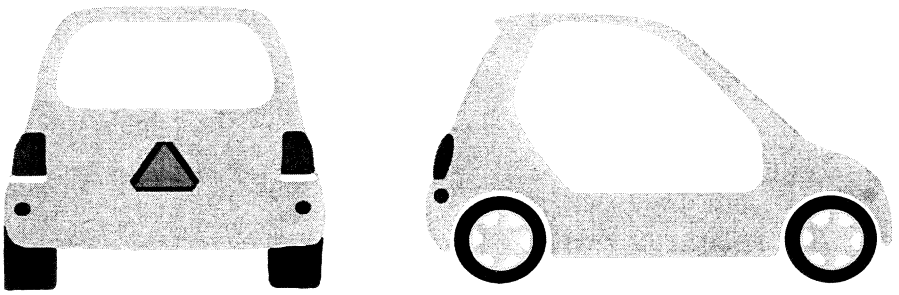

A. LSV with Reflex Reflectors

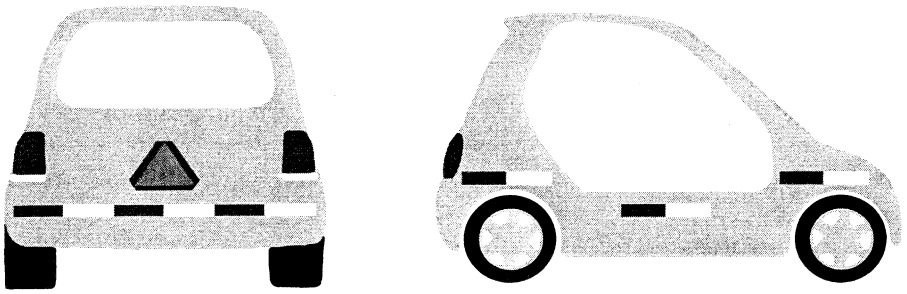

B. LSV with Retroreflective Sheeting

NHTSA believes that the proposed requirements, if adopted, would significantly enhance the visibility of LSVs, from both the side and rear views, at night.[17]

The agency notes that consumers may have an adverse reaction to retroreflective sheeting on the side of LSVs. However, the strip of retroreflective sheeting would have to cover only the rear of the vehicle and half the length of the vehicle. In addition, the agency is proposing to allow LSV manufacturers to use reflex reflectors instead of retroreflective sheeting. These reflectors might be more aesthetically pleasing than sheeting to drivers. Comments are invited on this issue.

[17] The agency is proposing to adopt both requirements, but manufacturers would only have to comply with one or the other.

D. Slow Moving Vehicle Emblem

LSVs also would have to be equipped with a slow moving vehicle emblem on the rear of the LSV. The slow moving vehicle emblem would have to comply with the emblem maintained by the American Society of Agricultural Engineers (ANSI/ASAE S276.5 MAY98, Slow-Moving Vehicle Identification Emblem), and would have to be mounted in accordance with ASAE requirements.

Following is a picture of the slow moving vehicle emblem with its dimensions.

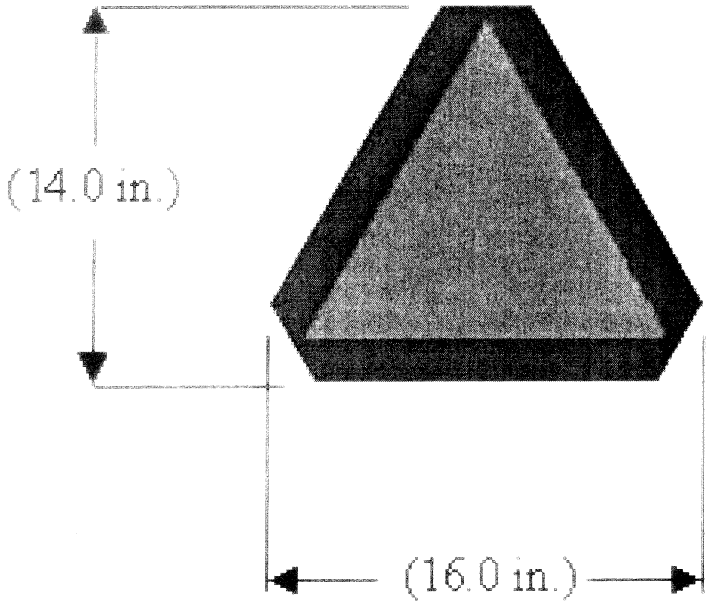

A. LSV Emblem with Dimensions

The ASAE slow moving vehicle emblem is a fluorescent orange, equilateral triangle with a red retroreflective border. The ASAE standard specifies that the emblem is mounted with the point of the triangle upward in a plane perpendicular to the direction of travel and ± 20 degrees from the vertical. The emblem is displayed as near to the rear and centered, or as near to the left of center of the vehicle or equipment, as practical. It is located 0.6 to 3 meters (2 to 10 feet) above the ground measured from the lower edge of the emblem. The emblem is ''securely and rigidly affixed to the equipment.''

NHTSA notes that several States, including Colorado, Hawaii, Illinois, Minnesota, New Mexico, Texas, and Virginia, currently require LSVs to be equipped with a slow moving vehicle emblem. However, most of these States require the emblem to conform to the ASAE standard as to specifications and mounting. The slow moving vehicle emblem proposed in this document would be consistent with those States' requirements.

Some States require that the emblem conform to different specifications. For example, Hawaii requires the emblem to be mounted at a height of 3 to 5 feet above the ground, and New Mexico requires the emblem to be mounted at a height of 2 to 5 feet above the ground. NHTSA notes that the ASAE height specification (2 to 10 feet above the ground) the agency is proposing to require would mesh with these State requirements. However, the agency invites comment on this issue.

E. Side Marker Lamps

LSVs also would have to be equipped with side marker lamps as specified in Table III and Table IV of Standard No. 108 for passenger cars, multipurpose passenger vehicles, trucks, and buses. This would require LSVs to be equipped with 2 red and 2 amber side marker lamps. The side marker lamps would have to be mounted at a height above the road surface of not less than 15 inches, and be located as follows: one red on each side of the LSV, as far to the rear as practicable; and one amber on each side of the LSV, as far to the front as practicable.

The agency believes that the addition of side marker lamps would significantly enhance the visibility of LSVs, from the side view, at night.

F. Headlamps, Taillamps, and Side Marker Lamps Illuminated While LSV Is Being Operated

An LSV's headlamps, taillamps, and side marker lamps also would have to be illuminated at all times while the LSV is being operated. Thus, when an LSV's ignition is activated, or the switch or device that provides power from the propulsion batteries to the propulsion motor(s) is in the activated or the ready-to-drive position, its headlamps, taillamps, and side marker lamps would have to illuminate automatically and remain illuminated.

The agency believes that requiring LSV headlamps, taillamps, and side marker lamps to be illuminated while the LSV is being operated would significantly enhance the conspicuity of LSVs from the front and rear during the daytime and twilight hours. While the agency has no data on the effectiveness of requiring headlamps, taillamps, and side marker lamps to be illuminated during vehicle operation, a June 2000 NHTSA report on the effectiveness of daytime running lamps (DRLs) indicated that passenger cars with DRLs were involved in 7 percent fewer non-fatal, two-vehicle crashes, and 28 percent fewer pedestrian fatalities.[18]

The agency also notes that many LSVs operate on battery power, and that the

[18] ''A Preliminary Assessment of the Crash-Reduciing Effectiveness of Passenger Car Daytime Runninig Lamps (DRLs),'' NHTSA, June 2000, DOT HS 808 645. A copy of this report has been placed in the docket.

maximum range of current battery-powered LSVs is limited to about 30 miles on a full battery charge. Requiring LSVs to have their headlamps, taillamps, and side marker lamps illuminated at all times while the LSV is being operated would have some impact on the battery power. However, the agency is uncertain of the extent of that impact. The agency also notes that reducing the maximum range of battery-powered LSVs could be considered a safety issue if an LSV runs out of power while being operated on a public roadway.

NHTSA requests comment on the impact of this proposed requirement on the conspicuity of LSVs, the maximum range of battery-powered LSVs, and the safety consequences of reduced battery power.

G. Notifying State Agencies and Monitoring LSV Usage

Finally, GM requested that the agency: (1) notify State agencies of the potential risks associated with the increased operation of LSVs on public roads and encourage those State agencies to consider appropriate measures to reduce the potential for harm; and (2) monitor any increased usage of LSVs on public roads for the incidence of collisions and resulting injuries to determine if stronger measures should be incorporated in Standard No. 500.

NHTSA believes these recommendations have merit. With so many States permitting LSVs to be operated on public roads, we agree that it would be worthwhile for the agency to emphasize its concerns to those State agencies about the risks associated with the operation of LSVs on public roads. As to monitoring LSV usage on public roads and fatalities and injuries as a result of crashes involving LSVs, we will consult with the state agencies on this matter.

As such, the agency believes that States should consider monitoring LSV usage on public roads and fatalities and injuries that result from crashes involving LSVs. The agency invites comment on how that monitoring should be done, both on a State and a national level, consistently and effectively. The agency also invites comment on the best way to consult with the States on this issue.

H. Questions on This Proposal

The agency requests answers to the following questions on the additional conspicuity requirements and warning label proposed in this document. Specifically:

1. Would these conspicuity features be appropriate and effective during the day? At night?
2. Should the agency require conspicuity features in addition to those being proposed?
3. What would the cost be of the proposed features? Of any additional features?
4. How can the agency increase conspicuity while maintaining consumer acceptance?
5. Should additional language or issues (*e.g.*, state of battery charge, rollover propensity, etc.) be included in the warning label?
6. Where should the label be located on the LSV? Should the agency specify that the label must be visible to a normally seated driver using the occupant restraints? Should it specify that the location of the label in relation to the H-point of the driver's seat, as the agency has done with respect to the location of the telltale for the air bag on-off switch?
7. What color(s) should the label be?
8. What size should the label be? What size should the font be?
9. Should the label be required to be permanent?
10. What would the cost be of adding this warning label?
11. What steps can the agency take to mesh its proposed warning label and slow moving vehicle emblem with existing State requirements for warning labels and slow moving vehicle emblems?
12. What steps should the agency and States take to address the risks associated with the operation of LSVs in mixed traffic and to monitor crashes involving LSVs?
13. How would the proposed requirement that LSVs have their headlamps, taillamps, and side marker lamps illuminated at all times while the LSV is being operated impact LSVs that operate on battery power?

Please be as specific as possible in your answers to these questions and provide supporting data.

I. Lead Time

NHTSA is proposing to require these additional features, except for the side marker lamps, for LSVs manufactured on or after September 1, 2002 for the following reasons.

The ZEV mandate discussed above will take effect in California September 1, 2002. Thus, the agency anticipates that a high volume of LSVs could be sold and operating on the public roads later this year. The agency believes the safety of the drivers of these LSVs would be enhanced by requiring these LSVs to be equipped with the conspicuity features proposed in this document.

The agency also believes that LSV manufacturers and/or dealers would need little time to procure and install most of the items the agency is proposing to require because they are readily available and easily installed.[19] Retroreflective sheeting may be installed with adhesive backings. Reflex reflectors also may be installed with adhesive backings or with self-drilling-tapping screws or by pop-rivets. The slow-moving vehicle emblem is almost always installed on a completed vehicle using brackets provided by the vehicle manufacturer or by the emblem manufacturer.

The agency notes that while the warning label is not readily available, it should not be difficult for LSV manufacturers and dealers to procure such a label when the content of the warning is already known. Warning labels also are easily installed. They typically have an adhesive backing and can be added as the LSV is assembled or some time after.

NHTSA also notes that the lights-on requirement would necessitate an additional relay that can be added after the LSV is assembled, by either the manufacturer or dealer. Instructions from the LSV manufacturer would simplify this process, especially if the manufacturer were to make available to LSV dealers a kit that would suffice until all LSVs were manufacturer with a standard lights-on feature.

The agency is proposing to require side marker lamps be installed on LSVs manufactured on or after September 1, 2003. The agency is proposing an additional year of lead time for this feature because the installation of side marker lamps requires a wiring harness change and possibly a higher current capable lighting switch/relay. Thus, the agency believes an extra year of lead time is appropriate for this feature.

V. Costs

NHTSA estimates that the cost of equipping an LSV with the proposed warning label would be from $0.08 to $0.13 per vehicle.[20] The agency notes that a small number of manufacturers already equip some LSVs with a label warning of the vehicle's operational restrictions. These labels may need to be redesigned, which would cost less than providing a new label. However, given the small number of LSVs that are currently equipped with such a label,

[19] The agency notes that some vehicles may be at dealerships, but believes that these additional items would easily be installable by dealers because they are simple add-on devices.

[20] All cost estimates are in 2001 dollars.

the agency believes that this difference in cost will not affect the $0.08 to $0.13 per vehicle estimate.

NHTSA estimates that the cost of equipping an LSV with the proposed slow moving vehicle emblem, including installation and overhead costs, would be $7.00 per vehicle.

NHTSA is proposing to require LSV manufacturers to equip LSVs with either three additional reflex reflectors (an additional one on each side and the rear of the vehicle) or retroreflective sheeting on the sides and rear of the vehicle. The retail cost of reflex reflectors is about $1.00. Thus, if LSV manufacturers choose to comply by equipping LSVs with additional reflex reflectors, the agency estimates that the cost, including installation and overhead costs, would be $3.00 per vehicle.

The average current price of 50 mm-wide retroreflective sheeting is $2.54 per meter. The average LSV is about 3 meters long and 1.42 meters wide. However, the agency is proposing to require that the retroreflective sheeting cover only half of the length of the sides of LSVs. Thus, the average LSV would require 4.42 meters of 50 mm-wide retroreflective sheeting, at a cost of $11.23. The agency estimates that the labor cost would be $3.30 per vehicle.

The agency notes that in a 1992 NHTSA rulemaking to require that trailers with a gross vehicle weight rating of more than 10,000 pounds be equipped with either retroreflective sheeting or reflectors,[21] trailer manufacturers commented that their cost estimate was 54 percent higher than NHTSA's cost estimate. To account for the possibility that trailer manufacturers might experience costs higher than the agency's estimate, NHTSA increased its cost estimate by half the difference between the agency's estimate and the trailer manufacturer's estimate, or 27 percent. To be consistent, the agency is increasing its cost estimate for the current rulemaking by 27 percent as well. Thus, if LSV manufacturers choose to comply by equipping LSVs with retroreflective sheeting, the agency estimates that the cost would be $18.46 per vehicle [($11.23 + $3.30) * 1.27].

The agency estimates that the cost of equipping an LSV with side marker lamps would be $28.30 per vehicle.

The agency has been unable to estimate the cost of requiring LSVs to have their headlamps, taillamps, and side marker lamps illuminated while the LSV is being operated. The agency notes that many LSVs operate on batteries, and requiring LSVs to have their headlamps, taillamps, and side marker lamps illuminated at all times while the LSV is being operated would have some impact on the battery power. However, the agency has not been able to quantify that impact or the cost of that impact. The agency invites comment on this issue.

Based on the cost estimates above, the total cost of this proposal would be from $38.38 to $53.89 per vehicle, depending on whether LSV manufacturers choose to comply with reflex reflectors or retroreflective sheeting.

VI. Benefits

NHTSA has not attempted to quantify the safety benefits of these proposals. The agency invites comment on this issue.

VII. Rulemaking Analyses and Notices:

A. Executive Order 12866 and DOT Regulatory Policies and Procedures

Executive Order 12866, ''Regulatory Planning and Review'' (58 FR 51735, October 4, 1993), provides for making determinations whether a regulatory action is ''significant'' and therefore subject to Office of Management and Budget (OMB) review and to the requirements of the Executive Order. The Order defines a ''significant regulatory action'' as one that is likely to result in a rule that may:

(1) Have an annual effect on the economy of $100 million or more or adversely affect in a material way the economy, a sector of the economy, productivity, competition, jobs, the environment, public health or safety, or State, local, or Tribal governments or communities;

(2) Create a serious inconsistency or otherwise interfere with an action taken or planned by another agency;

(3) Materially alter the budgetary impact of entitlements, grants, user fees, or loan programs or the rights and obligations of recipients thereof; or

(4) Raise novel legal or policy issues arising out of legal mandates, the President's priorities, or the principles set forth in the Executive Order.

This rulemaking document was not reviewed under Executive Order 12866. It is not significant within the meaning of the DOT's Regulatory Policies and Procedures. This regulatory action would require additional conspicuity features and a warning label on LSVs. If this proposal is adopted, the agency estimates that the cost of these additions would be from $38.38 to $53.89 per vehicle, depending on whether LSV manufacturers choose to comply with reflex reflectors or retroreflective sheeting. The agency does not know how many LSVs are manufactured each year. However, according to its petition, GM believes that the volume of LSVs could grow to 50,000 units per year by the end of 2002. Using the 50,000 figure, the total cost of this rulemaking would be from $1.9 million to $2.7 million.

B. Regulatory Flexibility Act

Pursuant to the Regulatory Flexibility Act (5 U.S.C. 601 *et seq.*, as amended by the Small Business Regulatory Enforcement Fairness Act (SBREFA) of 1996), whenever an agency is required to publish a notice of rulemaking for any proposed or final rule, it must prepare and make available for public comment a regulatory flexibility analysis that describes the effect of the rule on small entities (*i.e.,* small businesses, small organizations, and small governmental jurisdictions). The Small Business Administration's (SBA) regulations at 13 CFR part 121 define a small business, in part, as a business entity ''which operates primarily within the United States.'' (13 CFR 121.105(a)). No regulatory flexibility analysis is required if the head of an agency certifies the rule will not have a significant economic impact on a substantial number of small entities. SBREFA amended the Regulatory Flexibility Act to require Federal agencies to provide a statement of the factual basis for certifying that a rule will not have a significant economic impact on a substantial number of small entities.

NHTSA has considered the effect of this proposed rule under the Regulatory Flexibility Act. As noted above, this proposed rule would require additional conspicuity features and a warning label on LSVs. The agency does not believe that there are a significant number of small businesses that manufacture LSVs in the U.S. market. The agency knows of six LSV manufacturers. Three of them are aligned with large companies, and one is a foreign manufacturer, leaving only 2 small LSV manufacturers in the U.S.

Based on this analysis, I certify that this proposed rule would not have a significant economic impact on a substantial number of small entities.

C. National Environmental Policy Act

NHTSA has analyzed this rulemaking action for the purposes of the National Environmental Policy Act. The agency has determined that implementation of this proposed rule would not have any significant impact on the quality of the human environment.

[21] NHTSA issued the final rule on December 10, 1992 (57 FR 58406, Docket No. 80–9, Notice 6).

D. Executive Order 13132 (Federalism)

Executive Order 13132 requires NHTSA to develop an accountable process to ensure ''meaningful and timely input by State and local officials in the development of regulatory policies that have federalism implications.'' ''Policies that have federalism implications'' is defined in the Executive Order to include regulations that have ''substantial direct effects on the States, on the relationship between the national government and the States, or on the distribution of power and responsibilities among the various levels of government.'' Under Executive Order 13132, the agency may not issue a regulation with Federalism implications, that imposes substantial direct compliance costs, and that is not required by statute, unless the Federal government provides funds necessary to pay the direct compliance costs incurred by State and local governments, the agency consults with State and local governments, or the agency consults with State and local officials early in the process of developing the proposed regulation. NHTSA also may not issue a regulation with Federalism implications and that preempts State law unless the agency consults with State and local officials early in the process of developing the proposed regulation.

The agency has analyzed this proposed rule in accordance with the principles and criteria set forth in Executive Order 13132 and has determined that it would have sufficient federalism implications to warrant consultation with State and local officials or the preparation of a federalism summary impact statement. If adopted, the proposal would preempt State laws requiring slow moving vehicle emblems, other than the emblem specified by the ASAE, to be mounted on LSVs in accordance with requirements different from those specified by the ASAE. The proposal would also impact state requirements for warning labels on LSVs. Accordingly, the agency contacted the AAMVA, and officials from Connecticut, Florida, Hawaii, Missouri, New Jersey, New York, Ohio, Oregon, Texas, and Virginia prior to issuing this proposed rule.

E. Civil Justice Reform

This proposed amendment would not have any retroactive effect. Under 49 U.S.C. 33118, whenever a Federal motor vehicle theft prevention standard is in effect, a State or political subdivision of a State may not adopt or maintain a different theft prevention standard for a motor vehicle or replacement part. 49 U.S.C. 32909 sets forth a procedure for judicial review of final rules establishing, amending, or revoking Federal motor vehicle theft prevention standards. That section does not require submission of a petition for reconsideration or other administrative proceedings before parties may file suit in court.

F. Paperwork Reduction Act

Under the Paperwork Reduction Act of 1995, a person is not required to respond to a collection of information by a Federal agency unless the collection displays a valid OMB control number. This proposed rule does not have any requirements that would be considered information collection requirements as defined by OMB in 5 CFR part 1320.

G. National Technology Transfer and Advancement Act

Section 12(d) of the National Technology Transfer and Advancement Act of 1995 (15 U.S.C. 272) directs NHTSA to use voluntary consensus standards in regulatory activities unless doing so would be inconsistent with applicable law or otherwise impractical. Voluntary consensus standards are technical standards (*e.g.,* materials specifications, test methods, sampling procedures, and business practices) that are developed or adopted by voluntary consensus standards bodies, such as the Society of Automotive Engineers (SAE). The NTTAA directs NHTSA to provide Congress, through OMB, explanations when the agency decides not to use available and applicable voluntary consensus standards.

The agency is proposing to use the following standard from the American Society of Agricultural Engineers: ANSI/ASAE S276.5 MAY98, Slow-Moving Vehicle Identification Emblem.

The agency also notes that, in March 2002, the Society of Automotive Engineers (SAE) adopted a standard on LSVs.[22] The SAE standard specifies that reflex reflectors are to be mounted at a height above the road surface of not less than 15 inches nor more than 60 inches, and be located as follows: Two yellow, mounted (one on each side) as far forward as practicable; two red, mounted (one on each side) as far rearward as practicable; and two red, mounted on the rear, as far from the vehicle centerline as practicable.

NHTSA is proposing to require that the reflex reflectors be mounted at a height above the road surface of not less than 15 inches and not more than 60 inches, and be located as follows: Two amber, mounted (one on each side) as far forward as practicable; two red, mounted (one on each side) as far rearward as practicable; and two red mounted on the rear, one on each side of the vertical centerline, at the same height, and as far apart as practicable.

Thus, NHTSA's proposal differs from the SAE standard in one minor way: The SAE standard specifies a different color (yellow) than the agency's proposal (amber) for the two reflectors mounted on the side of the LSV as far forward as practicable. NHTSA is not proposing to adopt yellow as the color for these reflectors for the following reasons. First, the agency wants these LSV requirements to be consistent with the requirements for other light vehicles. Standard No. 108 requires reflex reflectors for other light vehicles to be amber (or red), not yellow. Second, Standard No. 108 refers to SAE standard J594f (January 1977) for the color of reflex reflectors. That SAE standard refers to SAE standard J578, ''Color Specifications for Electric Signal Lighting Devices,'' which uses ''amber'' and ''yellow'' interchangeably. Finally, the SAE standard for LSVs does not define ''yellow.''

The SAE standard also contains optional specifications for side marker lamps. If side marker lamps are provided, the SAE standard specifies that they are to be mounted at a height above the road surface of not less than 15 inches and not more than 60 inches, and be located as follows: One yellow on each side of the LSV, as far forward as practicable; and one red on each side of the LSV, as far rearward as practicable.

NHTSA is proposing to require that side marker lamps be mounted at a height above the road surface of not less than 15 inches, and be located as follows: One amber on each side of the LSV, as far forward as practicable; and one red on each side of the LSV, as far rearward as practicable.

Thus, the agency's proposal differs from the SAE standard in two minor ways: The SAE standard contains a maximum height specification (60 inches above the road surface), and the agency's proposal does not; and the SAE standard specifies a different color (yellow) for the side marker lamps located as far forward as practicable than the agency's proposal (amber). NHTSA is not proposing a maximum height specification for side marker lamps because it is unnecessary. Reflex reflectors are required to be mounted between 15 and 60 inches above the road surface because they reflect light

[22] ''Low Speed Vehicles,'' Document No. J2358, March 2002.

from other vehicles' headlamps. If they were more than 60 inches above the road, they would not reflect light effectively, and thus would not be easily seen. However, side marker lamps emit light. Thus, they do not have to be below a certain height in order to be seen. NHTSA is not proposing to adopt yellow as the color for these side marker lamps for the same reasons the agency is not proposing to adopt yellow as the color for reflex reflectors.

Finally, the SAE standard specifies that LSVs be equipped with several safety warnings/signs. The SAE standard specifies that safety signs be permanently affixed to the vehicle, be visible to the operator, and convey the following information:

To avoid the risk of severe personal injury or death:

a. Only operate at maximum speed when on smooth, flat, non-congested roadways or paved pathways.

b. Do not operate the vehicle until all occupants are seated and seat belts are fastened (if so equipped).

c. Drive slowly in turns and when descending grades.

d. Set parking brake before leaving vehicle.

e. Place vehicle control in ''Neutral/Park'', if so equipped, and remove the ignition key when not in use.

f. Do not operate under the influence of alcohol or other drugs.

NHTSA is proposing to require that the warning label be permanently affixed in a location that is inside the vehicle and is clearly visible from the driver's seating position. The warning label would have to convey the following information:

a. An LSV has less safety equipment than conventional motor vehicles;.

b. The operator and passengers have a higher risk of crash, serious injury, or death when the LSV is operated on roads with conventional motor vehicles or on roads where the posted speed limit exceeds 25 mph;

c. LSV operators and passengers should always wear safety belts.

The agency believes that the warning label proposed in this document addresses the safety problem discussed in this document, *i.e.,* the operation of LSVs on roads with conventional motor vehicles and on roads where the posted speed limit exceeds the top speed of LSVs. In addition, NHTSA is proposing specifications for the size of the font, the background colors, and the size of the label itself. The SAE standard does not contain such specifications. The agency believes such specifications are necessary to ensure that the warning is uniform, eye-catching, and is easy to read and understand. Accordingly, the agency is not proposing the safety warning specified in the SAE standard. However, the agency solicits comments on this and all other aspects of the SAE standard. The agency will consider those comments in making decisions about a final rule.

The agency will consider any other relevant voluntary standards should they become available.

H. Unfunded Mandates Reform Act

Section 202 of the Unfunded Mandates Reform Act of 1995 (UMRA) requires Federal agencies to prepare a written assessment of the costs, benefits, and other effects of proposed or final rules that include a Federal mandate likely to result in the expenditure by State, local, or tribal governments, in the aggregate, or by the private sector, of more than $100 million in any one year (adjusted for inflation with base year of 1995). Before promulgating a rule for which a written statement is needed, section 205 of the UMRA generally requires NHTSA to identify and consider a reasonable number of regulatory alternatives and adopt the least costly, most cost-effective, or least burdensome alternative that achieves the objective of the rule. The provisions of section 205 do not apply when they are inconsistent with applicable law. Moreover, section 205 allows NHTSA to adopt an alternative other than the least costly, most cost-effective, or least burdensome alternative if the agency publishes with the final rule an explanation why that alternative was not adopted.

If adopted, this proposed rule would not result in the expenditure by State, local, or tribal governments, in the aggregate, or by the private sector, of more than $100 million annually.

I. Plain Language

Executive Order 12866 requires each agency to write all rules in plain language. Application of the principles of plain language includes consideration of the following questions:

—Has the agency organized the material to suit the public's needs?

—Are the requirements in the rule clearly stated?

—Does the rule contain technical language or jargon that is not clear?

—Would a different format (grouping and order of sections, use of headings, paragraphing) make the rule easier to understand?

—Would more (but shorter) sections be better?

—Could the agency improve clarity by adding tables, lists, or diagrams?

—What else could the agency do to make this rulemaking easier to understand?

If you have any responses to these questions, please include them in your comments on this NPRM.

J. Regulation Identifier Number (RIN)

The Department of Transportation assigns a regulation identifier number (RIN) to each regulatory action listed in the Unified Agenda of Federal Regulations. The Regulatory Information Service Center publishes the Unified Agenda in April and October of each year. You may use the RIN contained in the heading at the beginning of this document to find this action in the Unified Agenda.

Comments

How Do I Prepare and Submit Comments?

Your comments must be written and in English. To ensure that your comments are correctly filed in the Docket, please include the docket number of this document in your comments.

Your comments must not be more than 15 pages long. (49 CFR 553.21). NHTSA established this limit to encourage you to write your primary comments in a concise fashion. However, you may attach necessary additional documents to your comments. There is no limit on the length of the attachments.

Please submit two copies of your comments, including the attachments, to Docket Management at the address given above under **ADDRESSES.**

You may also submit your comments to the docket electronically by logging onto the Dockets Management System Web site at *http://dms.dot.gov.* Click on ''Help & Information'' or ''Help/Info'' to obtain instructions for filing the document electronically.

How Can I Be Sure That My Comments Were Received?

If you wish Docket Management to notify you upon its receipt of your comments, enclose a self-addressed, stamped postcard in the envelope containing your comments. Upon receiving your comments, Docket Management will return the postcard by mail.

How Do I Submit Confidential Business Information?

If you wish to submit any information under a claim of confidentiality, you should submit three copies of your complete submission, including the information you claim to be confidential

business information, to the Chief Counsel, NHTSA, at the address given above under **FOR FURTHER INFORMATION CONTACT.** In addition, you should submit two copies, from which you have deleted the claimed confidential business information, to Docket Management at the address given above under **ADDRESSES.** When you send a comment containing information claimed to be confidential business information, you should include a cover letter setting forth the information specified in our confidential business information regulation. (49 CFR part 512.)

Will the Agency Consider Late Comments?

NHTSA will consider all comments that Docket Management receives before the close of business on the comment closing date indicated above under **DATES.** To the extent possible, the agency will also consider comments that Docket Management receives after that date. If Docket Management receives a comment too late for the agency to consider it in developing a final rule (assuming that one is issued), the agency will consider that comment as an informal suggestion for future rulemaking action.

How Can I Read the Comments Submitted by Other People?

You may read the comments received by Docket Management at the address given above under **ADDRESSES.** The hours of the Docket are indicated above in the same location.

You may also see the comments on the Internet. To read the comments on the Internet, take the following steps:

1. Go to the Docket Management System (DMS) Web page of the Department of Transportation (*http://dms.dot.gov/*).
2. On that page, click on ''search.''
3. On the next page (*http://dms.dot.gov/search/*), type in the four-digit docket number shown at the beginning of this document. Example: If the docket number were ''NHTSA–1998–1234,'' you would type ''1234.'' After typing the docket number, click on ''search.''
4. On the next page, which contains docket summary information for the docket you selected, click on the desired comments. You may download the comments. Although the comments are imaged documents, instead of word processing documents, the ''pdf'' versions of the documents are word searchable.

Please note that even after the comment closing date, NHTSA will continue to file relevant information in the Docket as it becomes available. Further, some people may submit late comments. Accordingly, the agency recommends that you periodically check the Docket for new material.

List of Subjects in 49 CFR Part 571

Imports, Motor vehicle safety, Motor vehicles, Rubber products, Tires.

In consideration of the foregoing, NHTSA is proposing to amend part 571 as follows:

PART 571—FEDERAL MOTOR VEHICLE SAFETY STANDARDS

1. The authority citation for part 571 would continue to read as follows:

Authority: 39 U.S.C. 322, 30111, 30115, 30117, 30166; delegation of authority at 49 CFR 1.50.

2. Section 571.500 would be amended by revising paragraph S5(b) introductory text, (b)(1), (b)(3), and (b)(5), and adding paragraphs S5(b)(11), (b)(12), and (b)(13) to read as follows:

§ 571.500 Standard No. 500; Low-speed vehicles.

* * * * *

S5. Requirements.

* * * * *

(b) Each low-speed vehicle must be equipped with:

(1) Headlamps that are illuminated when the ignition is activated, or the switch or device that provides power from the propulsion batteries to the propulsion motor(s) is in the activated or the ready-to-drive position,

* * * * *

(3) Taillamps that are illuminated when the ignition is activated, or the switch or device that provides power from the propulsion batteries to the propulsion motor(s) is in the activated or the ready-to-drive position,

* * * * *

(5)(i) Reflex reflectors as specified in Table III of Standard No. 108 (49 CFR 571.108) for passenger cars, multipurpose passenger vehicles, trucks, and buses, and mounted as specified in Table IV of Standard No. 108 (49 CFR 571.108), or

(ii) Retroreflective sheeting as specified in S5.7.1.1 through S5.7.1.3 of Standard No. 108 (49 CFR 571.108), located as specified in S5.7.1.4.1(a) of Standard No. 108 for the rear of trailers, and S5.7.1.4.2 of Standard No. 108 for the side of trailers,

* * * * *

(11) An emblem that complies with ANSI/ASAE S276.5 MAY98, Slow-Moving Vehicle Identification Emblem (American Society of Agricultural Engineers, 2950 Niles Rd., St. Joseph, MI 49085–9659, USA ph. 616–429–0300, fax 616–429–3852, *hq@asae.org*.) This emblem must be mounted in accordance with the requirements therein.

(12) For LSVs manufactured on or after September 1, 2003, side marker lamps as specified in Table III of Standard No. 108 (49 CFR 571.108) for passenger cars, multipurpose passenger vehicles, trucks, and buses, that are:

(i) Mounted as specified in Table IV of Standard No. 108 (49 CFR 571.108), and

(ii) Illuminated when the ignition is activated, or the switch or device that provides power from the propulsion batteries to the propulsion motor(s) is in the activated or the ready-to-drive position, and

(13) A warning label that meets the following requirements—

(i) The label must be permanently affixed to a location that is inside the vehicle and is clearly visible from the driver's seating position.

(ii) The text area of the label must be not less than 175 cm^2 (27 in^2).

(iii) The header and footer areas must be yellow with black text, and the message area must be white with black text.

(iv) The font of the text in the header and footer areas must be not less than 6.25 mm (¼ inch) high; the font of the text in the center of the message area must be not less than 5 mm (3⁄16 inch) high; and the font of the text at the sides of the message area must be not less than 3 mm (⅛ inch) high.

(v) The label may be combined with a similar State-required warning label. On combined labels, the text specified in this section must be separated from the State-required text by a line.

(vi) The warning label must read as shown in Figure 1:

Figure 1

* * * * *

Issued: July 5, 2002.

Stephen R. Kratzke,

Associate Administrator for Safety Performance Standards.

[FR Doc. 02–17422 Filed 7–11–02; 8:45 am]

BILLING CODE 4910–59–P

Notices

Federal Register

Vol. 67, No. 134

Friday, July 12, 2002

This section of the FEDERAL REGISTER contains documents other than rules or proposed rules that are applicable to the public. Notices of hearings and investigations, committee meetings, agency decisions and rulings, delegations of authority, filing of petitions and applications and agency statements of organization and functions are examples of documents appearing in this section.

DEPARTMENT OF AGRICULTURE

Farm Service Agency

Request for Extension of a Currently Approved Information Collection

AGENCY: Farm Service Agency, USDA.

ACTION: Notice and request for comments.

SUMMARY: In accordance with the Paperwork Reduction Act of 1995, this Notice announces the intention of the Farm Service Agency (FSA) to request approval for information collection necessary to allow USDA's County Based Agency (CBA) customers to securely and confidently share data and receive services electronically. Authority for obtaining information from users is included in the Freedom to E-File Act, the Government Paperwork Elimination Act, and Electronic Signatures in Global and National Commerce Act (''E–SIGN''). This voluntary registration process will enable customers as well as CBA employees to register as authorized users and provide single sign-on capability for CBA on-line applications. The objectives of the registration process are to employ standardized methods for verifying the identity of CBA customers/partners and managing their credentials in support of electronic alternatives to traditional ink signatures and non-repudiation.

DATES: Comments on this notice must be received on or before September 10, 2002 to be assured consideration.

ADDITIONAL INFORMATION OR COMMENTS: Brent Trout, Accountant, Accounting Systems and Planning Staff, Kansas City Finance Office, Farm Service Agency, United States Department of Agriculture, STOP 8548; 6501 Beacon Drive, Kansas City, MO 64133, telephone number (816) 823–1119; or Internet e-mail, BETROUT@kcc.usda.gov.

SUPPLEMENTARY INFORMATION:

Title: USDA Registration Form to Request Electronic Access Code.

OMB Control Number: 0560–0219.

Type of Request: Extension of a currently approved information collection.

Abstract: The USDA CBA's have developed a management and technical process that addresses user authentication and authorization prerequisites for providing services electronically. The process provides an electronic alternative to traditional ink signatures. The process is based on a one-time registration requirement for each CBA customer desiring access to any on-line services that require user authentication. Form AD–2016 (USDA Registration Form to Request Electronic Access Code) is to be used to collect the minimum information necessary to verify and validate the identity of the customer before issuing user access credentials. Time to complete the form will vary from an estimated 10 to 15 minutes depending upon the method option the customer chooses to submit the form.

Estimate of Burden: Public reporting burden for the collection of information is estimated to average 10 to 15 minutes (dependent on type of submission) per customer.

Respondents: Individual CBA Service Center Customers.

Estimated Number of Respondents: 1,100,000.

Estimated Number of Responses per Respondent: 1.

Estimated Total Annual Burden on Respondents: 1,331,000.

Proposed topics for comment include: (a) Whether the collection of information is necessary for the proper performance of the functions of the agency, including whether the information will have practical utility; (b) the accuracy of the agencies' estimate of burden, including the validity of the methodology and assumptions used; (c) ways to enhance the quality, utility, and clarity of the information to be collected; or (d) ways to minimize the burden of the collection of the information on those who respond, including the use of appropriate automated, electronic, mechanical, or techniques or other forms of information technology.

Comments should be sent to the Desk Officer for Agriculture, Office of Information and Regulatory Affairs, Office of Management and Budget, Washington, DC 20503, and to Brent Trout, Accountant, Accounting Systems and Planning Staff, Kansas City Finance Office, Farm Service Agency, United States Department of Agriculture, STOP 8548; 6501 Beacon Drive, Kansas City, MO 64133, telephone number (816) 823–1119. Copies of the information collection may be obtained from Mr. Trout at the address above, or from a link at the FSA Web site at *www.fsa.usda.gov.* All responses to this notice will be summarized and included in the request for OMB approval. All comments will become a matter of public record.

Signed at Washington, DC, on June 28, 2002.

James R. Little,

Administrator, Farm Service Agency.

[FR Doc. 02–17598 Filed 7–11–02; 8:45 am]

BILLING CODE 3410–05–P

DEPARTMENT OF AGRICULTURE

Food and Nutrition Service

Food Distribution Program: Value of Donated Foods From July 1, 2002 to June 30, 2003

AGENCY: Food and Nutrition Service, USDA.

ACTION: Notice.

SUMMARY: This notice announces the value of donated foods or, where applicable, cash in lieu thereof, to be provided in the 2003 school year for each lunch served by schools participating in the National School Lunch Program (NSLP) or by commodity only schools and for each lunch and supper served by institutions participating in the Child and Adult Care Food Program.

EFFECTIVE DATE: July 1, 2002.

FOR FURTHER INFORMATION CONTACT: Suzanne Rigby, Chief, Schools and Institutions Branch, Food Distribution Division, Food and Nutrition Service, U.S. Department of Agriculture, 3101 Park Center Drive, Alexandria, Virginia 22302 or telephone (703) 305–2644.

SUPPLEMENTARY INFORMATION: These programs are listed in the Catalog of Federal Domestic Assistance under Nos. 10.550, 10.555, and 10.558 and are subject to the provisions of Executive Order 12372, which requires

intergovernmental consultation with State and local officials. (*See* 7 CFR part 3015, subpart V, and final rule related notice published at 48 FR 29114, June 24, 1983.)

This notice imposes no new reporting or recordkeeping provisions that are subject to Office of Management and Budget review in accordance with the Paperwork Reduction Act of 1995 (44 U.S.C. 3507). This action is not a rule as defined by the Regulatory Flexibility Act (5 U.S.C. 601–612) and thus is exempt from the provisions of that Act. This notice has been determined to be exempt under Executive Order 12866.

National Average Minimum Value of Donated Foods for the Period July 1, 2002 through June 30, 2003

This notice implements mandatory provisions of sections 6(c), 14(f) and 17(h)(1) (B) of the National School Lunch Act (the Act) (42 U.S.C. 1755(c), 1762a(f), and 1766(h)(1)(B)). Section 6(c)(1)(A) of the Act establishes the national average value of donated food assistance to be given to States for each lunch served in NSLP at 11.00 cents per meal. Pursuant to Section 6(c)(1)(B), this amount is subject to annual adjustments as of July 1 of each year to reflect changes in a three-month average value of the Price Index for Foods Used in Schools and Institutions for March, April, and May each year (Price Index). Section 17(h)(1)(B) of the Act provides that the same value of donated foods (or cash in lieu of donated foods) for school lunches shall also be established for lunches and suppers served in the Child and Adult Care Food Program. Notice is hereby given that the national average minimum value of donated foods, or cash in lieu thereof, per lunch under NSLP (7 CFR part 210) and per lunch and supper under the Child and Adult Care Food Program (7 CFR part 226) shall be 15.25 cents for the period July 1, 2002 through June 30, 2003.

The Price Index is computed using five major food components in the Bureau of Labor Statistics Producer Price Index (cereal and bakery products; meats, poultry and fish; dairy products; processed fruits and vegetables; and fats and oils). Each component is weighted using the relative weight as determined by the Bureau of Labor Statistics. The value of food assistance is adjusted each July 1 by the annual percentage change in a three-month average value of the Price Index for March, April and May each year. The three-month average of the Price Index decreased by 2.1 percent from 136.60 for March, April and May of 2001 to 133.79 for the same three months in 2002. When computed on the basis of unrounded data and rounded to the nearest one-quarter cent, the resulting national average for the period July 1, 2002 through June 30, 2003 will be 15.25 cents per meal. This is an decrease of .25 cents from the school year 2002 rate.

In addition to the 15.25 cents per meal, Congress has authorized additional funds to be used to purchase foods under section 6(e) of the Act (42 U.S.C. 1755(e)). Therefore, for this school year, schools will receive more than 15.25 cents per meal in commodities.

Section 14(f) of the Act provides that commodity only schools shall be eligible to receive donated foods equal in value to the sum of the national average value of donated foods established under section 6(c) of the Act and the national average payment established under section 4 of the Act (42 U.S.C. 1753). Such schools are eligible to receive up to 5 cents per meal of this value in cash for processing and handling expenses related to the use of such commodities.

Commodity only schools are defined in section 12(d)(2) of the Act (42 U.S.C. 1760(d)(2)) as ''schools that do not participate in the school lunch program under this Act, but which receive commodities made available by the Secretary for use by such schools in nonprofit lunch programs.'' For the 2003 school year, commodity only schools shall be eligible to receive donated food assistance valued at 35.25 cents for each free, reduced price, and paid lunch served. This amount is based on the sum of the Section 6(c) level of assistance announced in this notice and the adjusted section 4 minimum national average payment factor for school year 2003. The section 4 factor for commodity only schools does not include the two cents per lunch increase for schools where 60 percent of the lunches served in the school lunch program in the second preceding school year were served free or at reduced prices, because that increase is applicable only to schools participating in the NSLP.

Authority: Sections 6(c)(1)(A) and (B), 6(e)(1), 14(f) and 17(h)(1) (B) of the National School Lunch Act, as amended (42 U.S.C. 1755(c)(1)(A) and (B) and 6(e)(1), 1762a(f), and 1766(h)(1)(B)).

Dated: July 5, 2002.

Roberto Salazar,

Administrator, Food and Nutrition Service.

[FR Doc. 02–17509 Filed 7–11–02; 8:45 am]

BILLING CODE 3410–30–P

DEPARTMENT OF AGRICULTURE

Forest Service

Black Hills National Forest, Mystic Ranger District, SD, Prairie Project Area Proposal and Analysis

AGENCY: Forest Service, USDA.

ACTION: Notice of intent to prepare an environmental impact statement.

SUMMARY: The Forest Service will prepare an environmental impact statement on a proposal to implement multiple resource management actions within the Prairie Project Area as directed by the Black Hills National Forest Land and Resource Management Plan. The Prairie Project Area covers about 29,000 acres of National Forest System land and about 6,300 acres of interspersed private land within the lower Rapid Creek watershed directly west of Rapid City, South Dakota. Proposed actions include: *Promoting natural fuel breaks* (via vegetation treatment) to reduce potential for large-scale intense wildfire; *Reduction of fuels* that currently exist and fuel created by vegetation treatment within the wildland-urban interface; *Wildlife habitat improvement* to protect critical big game winter range and habitat for a variety of plant and animal species; Supporting the preceding actions using *Vegetation treatments* on an estimated 8,000 acres to reduce the density of pine trees and restore hardwoods; *Providing a mix of motorized and non-motorized use* opportunities.

DATES: Comments concerning the scope of the analysis must be received by August 19, 2002. The draft environmental impact statement is expected to be available for public review by November 2002 and the final environmental impact statement is expected to be completed by March 2003.

ADDRESSES: Send written comments to Robert J. Thompson, District Ranger, Black Hills National Forest, Mystic Ranger District, 803 Soo San Drive, Rapid City, South Dakota 57702. Telephone Number: (605) 343–1567. e-mail: *mailroom_r2_blackhills@fs.fed.us.* With ''Prairie'' as subject.

FOR FURTHER INFORMATION CONTACT: Phill Grumstrup, Project coordinator, Black Hills National Forest, Mystic Ranger District, at above address, phone (605) 343–1567.

SUPPLEMENTARY INFORMATION: The actions proposed are in direct response to management direction provided by the Black Hills National Forest Land and Resource Management Plan (Forest

Plan). The site specific actions are designed based on Forest Plan Standards and Guidelines to promote existing resource conditions in the Prairie Project Area toward meeting Forest Plan Goals and Objectives. The project area lies along the east side of the Black Hills National Forest and directly west of Rapid City, South Dakota. Anticipated issues include: fire and fuels hazard in the wildland-urban interface; support and opposition to vegetation treatment such as timber harvest; impacts of vegetation treatment and multiple forest uses on wildlife habitat; conflicting motorized and non-motorized use and travel management issues; maintaining and improving developed and dispersed recreation opportunities.

Purpose and Need for Action

The purpose of and need for the actions proposed in the Prairie Project is to: Reduce the potential for large-scale intense wildfire, reduce fuel loads and assure access for fire protection; Protect big game winter range and provide habitat for a variety of plant and animal species; and provide for a variety of recreation opportunities including motorized and non-motorized uses while moving toward or meeting related Forest Plan Goals and Objectives, consistent with Forest Plan Standards and Guidelines.

Proposed Action

Proposed actions include the following:

- Reduce the potential for large-scale, intense wildfire by developing and maintaining natural fuel breaks. This action includes thinning the forest, removing conifers from hardwood stands such as aspen, bur oak and birch and by expanding and/or creating meadows.
- Reduce the amount of fuel that currently exists and fuel created by vegetation treatment activities. Treatment could include lopping, chipping, crushing, piling and burning; construction of up to 30 miles of constructed fuel breaks adjacent to private property, particularly those properties with houses and subdivisions; and prescribed burning of up to 4,000 acres to reduce fuels and benefit wildlife habitat.
- Manage big game winter range by providing opening for forage and protecting game animals during the critical winter period over a large portion of the area by expanding area closures to off-road motorized use seasonally or year-round.
- Support the preceding actions by treating up to 8,000 acres of vegetation to reduce the density of pine trees. This may be done by using commercial timber harvest to thin out commercial size trees and using other methods to thin small, non-commercial size trees. Thinning trees will reduce the potential for spreading crown fires by providing fuel breaks, lessening the risk from insects and disease, improving stand growth and vigor, and providing wood-fiber products for the local economy.
- Provide a mix of motorized and non-motorized opportunities in the area by designating some areas for off-road ATV/4-wheeler use and other areas for non-motorized uses such as hiking, mountain biking and walk-in hunting.

Responsible Official

John C. Twiss, Forest Supervisor, Black Hills National Forest, Highway 385 North RR 2, Box 200, Custer, SD 57730.

Nature of Decision To Be Made

The decision to be made is whether or not to implement the proposed action or alternatives at this time.

Scoping Process

Comments and input regarding the proposal will be requested via direct mailing from the public, other groups and agencies during the 30-day (plus) public comment period in July and August 2002. Also, response to the draft EIS will be sought from the interested public in November-December 2002.

Comment Requested

This notice of intent initiates the scoping process which guides the development of the environmental impact statement. It is our desire to involve interested parties and especially adjacent landowners in identifying the issues related to proposed activities. Comments will assist the planning team identify key issues and opportunities used to develop project alternatives and mitigation measures.

Early Notice of Importance of Public Participation in Subsequent Environmental Review

A draft environmental impact statement will be prepared for comment. The comment period on the draft environmental impact statement will be for 45 days (beginning around November 1, 2002) from the date the Environmental Protection Agency publishes the Notice of Availability in the **Federal Register.**

The Forest Service believes, at this early stage, it is important to give reviewers notice of several court rulings related to public participation in the environmental review process. First, reviewers of draft environmental impact statements must structure their participation in the environmental review of the proposal so that it is meaningful and alerts an agency to the reviewer's position and contentions. *Vermont Yankee Nuclear Power Corp.* v. *NRDC, 435 U.S. 519, 533 (1978).* Also, environmental objections that could be raised at the draft environmental impact statement stage but that are not raised until after completion of the final environmental impact statement may be waived or dismissed by the courts. *City of Angoon* v. *Hodel, 803 F.2d 1016, 1022 (9th Cir. 1986*) and *Wisconsin Heritages, Inc.* v. *Harris, 490 F. Supp. 1334, 1338 (E.D. Wis. 1980*). Because of these court rulings, it is very important that those interested in this proposed action participate by the close of the 45 day comment period so that substantive comments and objections are made available to the Forest Service at a time when it can meaningfully consider them and respond to them in the final environmental impact statement.

To assist the Forest Service in identifying and considering issues and concerns on the proposed action, comments on the draft environmental impact statement should be as specific as possible. It is also helpful if comments refer to specific pages or chapters of the draft statement. Comments may also address the adequacy of the draft environmental impact statement or the merits of the alternatives formulated and discussed in the statement. Reviewers may wish to refer to the Council on Environmental Quality Regulations for implementing the procedural provisions of the National Environmental Policy Act at 40 CFR 1503.3 in addressing these points.

(Authority: 40 CFR 1501.7 and 1508.22; Forest Service Handbook 1909.15, section 21)

Dated: July 8, 2002.

John C. Twiss,

Forest Supervisor.

[FR Doc. 02–17506 Filed 7–11–02; 8:45 am]

BILLING CODE 3410–11–M

DEPARTMENT OF AGRICULTURE

Forest Service

Glenn/Colusa County Resource Advisory Committee

AGENCY: Forest Service, USDA.

ACTION: Notice of meeting.

SUMMARY: The Glenn/Colusa County Resource Advisory Committee (RAC) will hold a meeting.

DATES: The meeting will be held on July 29, 2002, and will begin at 1:30 p.m. until approximately 4:30 p.m.

ADDRESSES: The meeting will be held at the Mendocino National Forest Supervisor's Office, 825 N. Humboldt Ave., Willows, CA

FOR FURTHER INFORMATION CONTACT: Bobbin Gaddini, Committee Coordinator, USDA, Mendocino National Forest, Grindstone Ranger District, P.O. Box 164, Elk Creek, CA 95939. (530) 968–5329; e-mail: ggaddini@fs.fed.us.

SUPPLEMENTARY INFORMATION: Agenda items to be covered include: (1) Approve the Minutes from Last Meeting, (2) Proposed By-Laws- Action, (3) Draft Selection Criteria/Operating Guidelines-Action, (4) Title II Submission Form—Action, (5) Update on RAC Projects, (6) Scramblers Presentations, (7) Public Comment, and (8) Next Agenda. The meeting is open to the public. Public input opportunity will be provided and individuals will have the opportunity to address the Committee at that time.

Dated: July 8, 2002.

James F. Giachino,

Designated Federal Officer.

[FR Doc. 02–17507 Filed 7–11–02; 8:45 am]

BILLING CODE 3410–11–M

DEPARTMENT OF AGRICULTURE

Forest Service

Lake County Resource Advisory Committee

AGENCY: Forest Service, USDA.

ACTION: Notice of meeting.

SUMMARY: The Lake County Resource Advisory Committee (RAC) will hold a meeting.

DATES: The meeting will be held on August 8, 2002, from 3 p.m. to 6 p.m.

ADDRESSES: The meeting will be held at the Lake County Board of Supervisor's Chambers at 255 North Forbes Street, Lakeport.

FOR FURTHER INFORMATION CONTACT: Debbie McIntosh, Committee Coordinator, USDA, Mendocino National Forest, Upper Lake Ranger District, 10025 Elk Mountain Road, Upper Lake, CA 95485. (707) 275–2361; e-mail *dmcintosh@fs.fed.us.*

SUPPLEMENTARY INFORMATION: Agenda items to be covered include: (1) Roll Call/Establish Quorum; (2) Review and Approval of the Minutes of the June 27, 2002 Meeting; (3) Discuss the Prioritization of 2002 Project Proposals; (4) Discussion of the Elk Mountain Road Grading Project; (5) Recommend and submit Projects; and (6) Public Comment period. The meeting is open to the public. Public input opportunity will be provided and individuals will have the opportunity to address the Committee at that time.

Dated: July 1, 2002.

Blaine P. Baker,

Designated Federal Officer.

[FR Doc. 02–17511 Filed 7–11–02; 8:45 am]

BILLING CODE 3410–11–M

DEPARTMENT OF AGRICULTURE

National Agricultural Library

Notice of Intent to Seek Approval to Collect Information

AGENCY: National Agricultural Library, Agricultural Research Service, USDA.

ACTION: Notice and Request for comments.

SUMMARY: In accordance with the Paperwork Reduction Act of 1995 and Office of Management and Budget (OMB) regulations, this notice announces the National Agricultural Library's intent to request approval for a new information collection form related to the Animal Welfare Information Center's (AWIC) workshop, *Meeting the Information Requirements of The Animal Welfare Act.* This workshop registration form requests contact, affiliation, and database searching experience information from participants. Participants include principal investigators, members of Institutional Animal Care and Use Committees, information providers, administrators of animal use programs, and veterinarians.

DATES: Comments on this notice must be received by September 16, 2002, to be assured of consideration.

ADDRESSES: Address all comments concerning this notice to Barbara Buchanan Biological Sciences Librarian, USDA, ARS, NAL, Animal Welfare Information Center, 10301 Baltimore Avenue. 4th Floor, Beltsville, MD 20705–2351. Submit electronic comments to *bbuchana@nal.usda.gov.*

FOR FURTHER INFORMATION CONTACT: Barbara Buchanan, Biological Sciences Librarian, Phone: 301–504–7048, or Fax: 301–504–7125

SUPPLEMENTARY INFORMATION:

Title: Workshop Registration Meeting the Information Requirements of the Animal Welfare Act.

OMB Number: Not yet assigned.

Expiration Date: N/A.

Type of Request: Approval for new data collection form.

Abstract: This web-based form collects information to register respondents in the workshop, *Meeting the Information Requirements of the Animal Welfare Act.* Information collected includes: workshop date preference, signature, name, title, organization name, mailing address, phone and fax numbers, and email address. Five questions are asked regarding: database searching experience, Institutional Animal Care and Use Committee membership, and what they would like to learn from their participation in the workshop

Estimate of Burden: Public reporting burden for this collection of information is estimated to average 5 minutes per response.

Respondents: principal investigators, members of Institutional Animal Care and Use Committees, information providers, administrators of animal use programs, and veterinarians.

Estimated Number of Respondents: 100 per year.

Estimated Total Annual Burden on Respondents: 8.33 hours.

Comments are invited on (a) whether the proposed collection of information is necessary for the proper performance of the functions of the agency, including whether the information will have practical utility; (b) the accuracy of the agency's estimate of the burden of the proposed collection of information, including the validity of the methodology and the assumptions used; (c) ways to enhance the quality, utility, and clarity of the information to be collected; and (d) ways to minimize the burden of the collection of information on those who respond, including the use of appropriate automated, electronic, mechanical, or other technology. Comments should be sent to the address in the preamble. All responses to this notice will be summarized and included in the request for Office of Management and Budget (OMB) approval. All comments will become a matter of public record.

Dated: June 25, 2002.

Caird E. Rexroad,

Acting Associate Administrator

[FR Doc. 02–17487 Filed 7–11–02; 8:45 am]

BILLING CODE 3410–03–P

DEPARTMENT OF AGRICULTURE

National Agricultural Statistics Service

Notice of Intent To Reinstate a Previously Approved Information Collection

AGENCY: National Agricultural Statistics Service, USDA.

ACTION: Notice and request for comments.

SUMMARY: In accordance with the Paperwork Reduction Act of 1995 (Public Law 104–13) and Office of Management and Budget regulations at 5 CFR part 1320 (60 FR 44978, August 29, 1995), this notice announces the intention of the National Agricultural Statistics Service (NASS) to request reinstatement of a previously approved information collection, the Equine Survey.

DATES: Comments on this notice must be received by September 16, 2002 to be assured of consideration.

ADDRESSES: Comments may be mailed to Ginny McBride, NASS OMB Clearance Officer, U.S. Department of Agriculture, Room 5336 South Building, 1400 Independence Avenue SW, Washington, DC 20250 or sent electronically to *gmcbride@nass.usda.gov.*

FOR FURTHER INFORMATION CONTACT: Rich Allen, Associate Administrator, National Agricultural Statistics Service, U.S. Department of Agriculture, (202) 720–4333.

SUPPLEMENTARY INFORMATION:

Title: Equine Survey.

OMB Number: 0535–0227.

Type of Request: Intent to Request Reinstatement of a Previously Approved Information Collection.

Abstract: To improve information regarding the equine industry, several State Departments of Agriculture are expected to contract with the National Agricultural Statistics Service to conduct an Equine Survey in their State within the next 3 years. Equine activities offer unusually varied opportunities for rural development. In addition to providing the livelihood for breeders, trainers, veterinarians, and many others, the horse remains important to recreation. The number of operations, number of animals, and economic information will quantify the importance of the equine industry to State economies. Income data provides a view of the benefits that the industry provides to the State economy and a ranking of its relative importance within both the agricultural sector and the State's total economic sector. The expenditure information provides data regarding the multiplier effect of money from the equine industry, effects of wage rates paid to both permanent and part-time employees, and secondary businesses supported by the industry. NASS intends to request that the survey be approved for 3 years. These data will be collected under the authority of 7 U.S.C. 2204(a). Individually identifiable data collected under this authority are governed by Section 1770 of the Food Security Act of 1985, 7 U.S.C. 2276, which requires USDA to afford strict confidentiality to non-aggregated data provided by respondents.

Estimate of Burden: Public reporting burden for this collection of information is estimated to average 30 minutes per response.

Respondents: Horse owners, breeders, trainers, boarders.

Estimated Number of Respondents: 45,000.

Estimated Total Annual Burden on Respondents: 22,500 hours.

Copies of this information collection and related instructions can be obtained without charge from Ginny McBride, NASS OMB Clearance Officer, at (202) 720–5778.

Comments: Comments are invited on: (a) Whether the proposed collection of information is necessary for the proper performance of the functions of the agency, including whether the information will have practical utility; (b) the accuracy of the agency's estimate of the burden of the proposed collection of information including the validity of the methodology and assumptions used; (c) ways to enhance the quality, utility, and clarity of the information to be collected; and (d) ways to minimize the burden of the collection of information on those who are to respond, including through the use of appropriate automated, electronic, mechanical, or other technological collection techniques or other forms of information technology. All responses to this notice will become a matter of public record and be summarized in the request for OMB approval.

Dated: June 24, 2002.

Rich Allen,

Associate Administrator.

[FR Doc. 02–17488 Filed 7–11–02; 8:45 am]

BILLING CODE 3410–20–P

DEPARTMENT OF AGRICULTURE

Natural Resources Conservation Service

Swan Quarter Watershed Project, Hyde County, NC

AGENCY: Natural Resources Conservation Service, Agriculture.

ACTION: Notice of a finding of no significant impact.

SUMMARY: Pursuant to Section 102(2)(C) of the National Environmental Policy Act of 1969 the Council on Environmental Quality Guidelines (40 CFR part 1500); and the Natural Resources Conservation Service Regulations (7 CFR part 650); the Natural Resources Conservation Service, U.S. Department of Agriculture, gives notice that an environmental impact statement is not being prepared for the Swan Quarter Watershed Project, Hyde County, North Carolina.

FOR FURTHER INFORMATION CONTACT: Mary K. Combs, State Conservationist, Natural Resources Conservation Service, 4405 Bland Road, Suite 205, Raleigh, North Carolina 27609, telephone (919) 873–2101.

SUPPLEMENTARY INFORMATION: The environmental assessment of this federally assisted action indicates that the project will not cause significant local, regional, or national impacts on the environment. As a result of these findings, Mary K. Combs, State Conservationist, has determined that the preparation and review of an environmental impact statement are not needed for this project.

The project purpose is to reduce flood damages. Proposed measures to address wind-tide flooding include 33,194 linear feet of earthen dike, 4,606 linear feet of PVC sheet piling, 10 pipes, and 28 tide gates. The project will benefit 125 homes and businesses and 2,400 acres of cropland.

The Notice of a Finding Of No Significant Impact (FONSI) has been forwarded to the Environmental Protection Agency and to various federal, state, and local agencies and interested parties. A limited number of copies of the FONSI are available to fill single copy requests at the above address. Basic data developed during the environmental assessment are on file and may be reviewed by contacting Jacob Crandall, Assistant State Conservationist for Water Resources at 4405 Bland Road, Suite 205, Raleigh, North Carolina 27609.

No administrative action on implementation of the proposal will be taken until 30 days after the date of this publication in the **Federal Register.**

Mary K. Combs,

State Conservationist.

[FR Doc. 02–17482 Filed 7–11–02; 8:45 am]

BILLING CODE 3410–16–M

ARTIC RESEARCH COMMISSION

U.S. Arctic Research Commission Meeting

July 1, 2002.

Notice is hereby given that the U.S. Arctic Research Commission will hold its 65th Meeting in Palisades, NY on July, 16–17, 2002. The Business Session open to the public will convene at 8:15

a.m. Tuesday, July 16–17, in the Agenda items include:

(1) Call to order and approval of the Agenda.
(2) Approval of the Minutes of the 64th Meeting.
(3) Reports from Congressional Liaisons.
(4) Agency Reports.

The focus of the Meeting will be reports and updates on programs and research projects affecting the U.S. Arctic. Presentations include a review of the research needs for civil infrastructure in Alaska.

The Business Session will begin at 8:15 a.m. Tuesday, July 16. An Executive Session will follow adjournment of the Business Session.

Any person planning to attend this meeting who requires special accessibility features and/or auxiliary aids, such as sign language interpreters must inform the Commission in advance of those needs.

CONTACT PERSON FOR MORE INFORMATION: Dr. Garrett W. Brass, Executive Director, Arctic Research Commission, 703–525–0111 or TDD 703–306–0090.

Garrett W. Brass,

Executive Director.

[FR Doc. 02–17483 Filed 7–11–02; 8:45 am]

BILLING CODE 7555–01–M

COMMITTEE FOR PURCHASE FROM PEOPLE WHO ARE BLIND OR SEVERELY DISABLED

Procurement List; Additions and Deletions

AGENCY: Committee for Purchase from People Who Are Blind or Severely Disabled.

ACTION: Additions to and deletions from Procurement List.

SUMMARY: This action adds to the Procurement List products and services to be furnished by nonprofit agencies employing persons who are blind or have other severe disabilities, and deletes from the Procurement List products previously furnished by such agencies.

EFFECTIVE DATE: August 11, 2002.

ADDRESSES: Committee for Purchase From People Who Are Blind or Severely Disabled, Jefferson Plaza 2, Suite 10800, 1421 Jefferson Davis Highway, Arlington, Virginia 22202–3259.

FOR FURTHER INFORMATION CONTACT: Sheryl D. Kennerly, (703) 603–7740.

SUPPLEMENTARY INFORMATION:

Additions

On March 29, May 17, and May 24, 2002, the Committee for Purchase From People Who Are Blind or Severely Disabled published notice (67 FR 15175, 35096, and 36567) of proposed additions to the Procurement List.

After consideration of the material presented to it concerning capability of qualified nonprofit agencies to provide the products and services and impact of the additions on the current or most recent contractors, the Committee has determined that the products and services listed below are suitable for procurement by the Federal Government under 41 U.S.C. 46–48c and 41 CFR 51–2.4. I certify that the following action will not have a significant impact on a substantial number of small entities. The major factors considered for this certification were:

1. The action will not result in any additional reporting, recordkeeping or other compliance requirements for small entities other than the small organizations that will furnish the products and services to the Government.

2. The action will result in authorizing small entities to furnish the products and services to the Government.

3. There are no known regulatory alternatives which would accomplish the objectives of the Javits-Wagner-O'Day Act (41 U.S.C. 46–48c) in connection with the products and services proposed for addition to the Procurement List.

Accordingly, the following products and services are added to the Procurement List:

Products

Product/NSN: Pad, Message, ''While You Were Out''
7530–00–NIB–0547.
NPA: Blind Industries & Services of Maryland, Baltimore, Maryland.
Contract Activity: Office Supplies & Paper Products Acquisition Center, New York, New York.
Product/NSN: Pad, Scouring
7920–00–171–1534.
NPA: Beacon Lighthouse, Inc., Wichita Falls, Texas.
Contract Activity: GSA, General Products Center, Fort Worth, Texas.
Product/NSN: Uniforms, Shirts and Pants
8405–00–NSH–0002 (Blue Pants, Small).
8405–00–NSH–0003 (Blue Pants, Medium).
8405–00–NSH–0004 (Blue Pants, Large).
8405–00–NSH–0005 (Blue Pants, X-Large).
8405–00–NSH–0006 (Blue Pants, XX-Large).
8405–00–NSH–0007 (Blue Pants, XXX-Large).
8405–00–NSH–0008 (Blue Pants, XXXX-Large).
8405–00–NSH–0009 (Blue Top, Small).
8405–00–NSH–0010 (Blue Top, Medium).
8405–00–NSH–0011 (Blue Top, Large).
8405–00–NSH–0012 (Blue Top, X-Large).
8405–00–NSH–0013 (Blue Top, XX-Large).
8405–00–NSH–0014 (Blue Top, XXX-Large).
8405–00–NSH–0015 (Blue Top, XXXX-Large).
NPA: Middle Georgia Diversified Industries, Inc., Dublin, Georgia.
Contract Activity: Immigration and Naturalization Service, DOJ.

Services

Service Type/Location: Administrative Support Services, Federal Bureau of Prisons, Butner, North Carolina.
NPA: Raleigh Lions Clinic for the Blind, Inc., Raleigh, North Carolina.
Contract Activity: Federal Bureau of Prisons LSCI, Butner, North Carolina.
Service Type/Location: Administrative Support Services, GSA Tampa Property Management Office, Tampa, Florida.
NPA: Tampa Lighthouse for the Blind, Tampa, Florida.
Contract Activity: GSA Property Management Division, Atlanta, Georgia.
Service Type/Location: Janitorial/Grounds and Related Services, Federal Building, Tucson, Arizona. Motor Pool Office and Garage, Tucson, Arizona. US Border Patrol Sector HQ, Tucson, Arizona.
NPA: Tetra Corporation, Tucson, Arizona.
Contract Activity: GSA, Public Buildings Service, San Francisco, California.
Service Type/Location: Packaging Service: Crane Division, Naval Surface Warfare Center, Crane, Indiana.
NPA: Knox County Association for Retarded Citizens, Inc., Vincennes, Indiana.
Contract Activity: Naval Surface Warfare Center, Crane, Indiana.

Deletions

I certify that the following action will not have a significant impact on a substantial number of small entities. The major factors considered for this certification were:

1. The action may not result in any additional reporting, recordkeeping or other compliance requirements for small entities.

2. The action may result in authorizing small entities to furnish the products to the Government.

3. There are no known regulatory alternatives which would accomplish the objectives of the Javits-Wagner-O'Day Act (41 U.S.C. 46–48c) in connection with the products deleted from the Procurement List.

After consideration of the relevant matter presented, the committee has determined that the products listed below are no longer suitable for procurement by the Federal Government under 41 U.S.C. 46–48c and 41 CFR 51–2.4.

Accordingly, the following products are hereby deleted from the Procurement List:

Products

Product/NSN: Impulse Merchandising Program (IMP) Shippers.

M.R. 11522 (Corn Skewers).
M.R. 11577 (Pet Scooper/Pet Lids).
M.R. 11602 (Straws).
M.R. 11618 (Foil Baking Cups).
M.R. 11695 (Cheese Cloth).
NPA: Winston-Salem Industries for the Blind, Winston-Salem, North Carolina.

Contract Activity: Defense Commissary Agency, Fort Lee, Virginia.

Sheryl D. Kennerly,

Director, Information Management.

[FR Doc. 02–17545 Filed 7–11–02; 8:45 am]

BILLING CODE 6353–01–P

COMMITTEE FOR PURCHASE FROM PEOPLE WHO ARE BLIND OR SEVERELY DISABLED

Procurement List Proposed Additions and Deletions

AGENCY: Committee for Purchase from People Who Are Blind or Severely Disabled.

ACTION: Proposed additions to and deletions from Procurement List.

SUMMARY: The Committee is proposing to add to the Procurement List products and services to be furnished by nonprofit agencies employing persons who are blind or have other severe disabilities, and to delete products previously furnished by such agencies.

COMMENTS MUST BE RECEIVED ON OR BEFORE: August 11, 2002.

ADDRESSES: Committee for Purchase From People Who Are Blind or Severely Disabled, Jefferson Plaza 2, Suite 10800, 1421 Jefferson Davis Highway, Arlington, Virginia 22202–3259.

FOR FURTHER INFORMATION CONTACT: Sheryl D. Kennerly, (703) 603–7740.

SUPPLEMENTARY INFORMATION: This notice is published pursuant to 41 U.S.C 47(a) (2) and 41 CFR 51–2.3. Its purpose is to provide interested persons an opportunity to submit comments on the possible impact of the proposed actions.

Additions

If the Committee approves the proposed additions, the entities of the Federal Government identified in this notice for each product or service will be required to procure the products and services listed below from nonprofit agencies employing persons who are blind or have other severe disabilities.

I certify that the following action will not have a significant impact on a substantial number of small entities. The major factors considered for this certification were:

1. If approved, the action will not result in any additional reporting, recordkeeping or other compliance requirements for small entities other than the small organizations that will furnish the products and services to the Government.

2. If approved, the action will result in authorizing small entities to furnish the products and services to the government.

3. There are no known regulatory alternatives which would accomplish the objectives of the Javits-Wagner-O'Day Act (41 U.S.C. 46–48c) in connection with the products and services proposed for addition to the Procurement List. Comments on this certification are invited. Commenters should identify the statement(s) underlying the certification on which they are providing additional information.

The following products and services are proposed for addition to Procurement List for production by the nonprofit agencies listed:

Products

Product/NSN: Pen, Free Ink, Rollerball, Needle Point.
7520–00–NIB–1538 (Black 5mm).
7520–00–NIB–1539 (Black 7mm).
7520–00–NIB–1540 (Blue 5mm).
7520–00–NIB–1541 (Blue 7mm).
7520–00–NIB–1542 (Red 5mm).
7520–00–NIB–1543 (Red 7mm).
NPA: San Antonio Lighthouse, San Antonio, Texas.
Contract Activity: Office Supplies & Paper Products Acquisition Center, New York, New York.

Services

Service Type/Location: Food Service Attendant
Dakota Inn (Flight Kitchen and Alert Facility), Minot AFB, North Dakota.
NPA: MVW Services, Inc., Minot, North Dakota.
Contract Activity: Department of the Air Force, Minot AFB, North Dakota.
Service Type/Location: Grounds Maintenance
USCG Chief of Staff Quarters, Bethesda, Maryland
USCG Commandant Quarters, Kenwood, Maryland
USCG Vice Commandant Quarters, Bethesda, Maryland
NPA: The Arc of Montgomery County, Inc., Rockville, Maryland.
Contract Activity: USCG Headquarters HSC A–3, Washington, DC
Service Type/Location: Janitorial/Custodial
Air Traffic Control Tower (Midway Airport), Chicago, Illinois.
NPA: Jewish Vocational Service & Employment Center, Chicago,Illinois.
Contract Activity: Federal Aviation Administration, Des Plaines, Illinois
Service Type/Location: Janitorial/Custodial
FAA Chicago/Tracon, Elgin, Illinois.
NPA: Jewish Vocational Service & Employment Center, Chicago, Illinois.
Contract Activity: Federal Aviation Administration, Des Plaines, Illinois.
Service Type/Location: Janitorial/Custodial
VA Greater Los Angeles Regional Healthcare System.
Consolidated Mail Outpatient Pharmacy. Los Angeles, California.
NPA: Job Options, Inc., San Diego, California.
Contract Activity: Department of Veterans Affairs, Long Beach, California.
Service Type/Location: Laundry Service
National Training Center. Fort Irwin, California.
NPA: Job Options, Inc., San Diego, California.
Contract Activity: Department of the Army, Fort Irwin, California.
Service Type/Location: Switchboard Operation
VA Health Care Center, San Diego, California.
NPA: PRIDE Industries, Roseville, California.
Contract Activity: VA Health Care System (664/NBC), San Diego, California.
Service Type/Location: Telephone Answering Service
Naval Medical Center, San Diego, California.
NPA: National Telecommuting Institute, Inc., Boston, Massachusetts.
Contract Activity: Naval Medical Center, San Diego, California.

Deletions

I certify that the following action will not have a significant impact on a substantial number of small entities. The major factors considered for this certification were:

1. If approved, the action will not result in any additional reporting, recordkeeping or other compliance requirements for small entities other than the small organizations that will furnish the products to the Government.

2. If approved, the action will result in authorizing small entities to furnish the commodities and services to the Government.

3. There are no known regulatory alternatives which would accomplish the objectives of the Javits-Wagner-O'Day Act (41 U.S.C. 46–48c) in connection with the products proposed for deletion from the Procurement List.

The following products have been proposed for deletion from the Procurement List:

Products

Product/NSN: Strainer/M.R. 818.
Product/NSN: Strainer and Pastry Brush/M.R. 817.
Product/NSN: Strainer and Pastry Brush/M.R. 829.
NPA: Alabama Industries for the Blind, Talladega, Alabama.
Product/NSN: Bowl, Deodorizer/M.R. 503.
Product/NSN: Bowl, Deodorizer/M.R. 504.
NPA: Tampa Lighthouse for the Blind, Tampa, Florida.
Product/NSN: Cutlery, Heavy Duty/M.R. 597.
NPA: Ho'opono Workshop for the Blind, Honolulu, Hawaii.
NPA: MidWest Enterprises for the Blind, Inc., Kalamazoo, Michigan.
NPA: L.C. Industries For The Blind, Inc., Durham, North Carolina.
NPA: The Lighthouse for the Blind, Inc., Seattle, Washington.
NPA: Industries for the Blind, Inc.,

Milwaukee, Wisconsin.
Product/NSN: Potpourri/M.R. 404.
NPA: Envision, Inc., Wichita, Kansas.
Product/NSN: Broom, Corn/M.R. 960.
Product/NSN: Mop, Deck/M.R. 961.
Product/NSN: Refill, Mop, Dust/M.R. 985.
NPA: Mississippi Industries for the Blind, Jackson, Mississippi.
Product/NSN: Air Deodorizer, Push-Up, Floral Spring/M.R. 506.
Product/NSN: Air Deodorizer, Push-up, Lemon/M.R. 507.
NPA: Lighthouse for the Blind, St. Louis, Missouri.
Product/NSN: Aqua Plunger Mop/M.R. 1026.
NPA: ISIGHT, Inc., Las Vegas, Nevada.
NPA: L.C. Industries For The Blind, Inc., Durham, North Carolina.
Product/NSN: Brush, Duster/M.R. 913.
Product/NSN: Gloves, Latex/M.R. 516.
Product/NSN: Gloves, Latex/M.R. 517.
Product/NSN: Gloves, Latex/M.R. 518.
NPA: New York City Industries for the Blind, Brooklyn, New York.
Product/NSN: Mop, Sponge, Block/M.R. 990.
Product/NSN: Sac Saver/M.R. 1010.
NPA: L.C. Industries For The Blind, Inc., Durham, North Carolina.
Product/NSN: Broom, Mixed Fiber/M.R. 901.
Product/NSN: Fabric Softener Sheets, Reusable/M.R. 519.
Product/NSN: Refill, Mop, Dust/M.R. 985.
NPA: Industries of the Blind, Inc., Greensboro, North Carolina.
Product/NSN: Apron, Child, Painted Design/M.R. 780.
NPA: Lions Industries for the Blind, Inc., Kinston, North Carolina.
Product/NSN: Character Lunch Bags/M.R. 402.
Product/NSN: Master Baster/M.R. 802.
Product/NSN: Soap Shipper/M.R. 431.
NPA: Winston-Salem Industries for the Blind, Winston-Salem, North Carolina.
Product/NSN: Kitchen, Utensils/M.R. 848.
NPA: Cincinnati Association for the Blind, Cincinnati, Ohio.
Product/NSN: Bag, Canvas/M.R. 701.
NPA: Lions Volunteer Blind Industries, Inc., Morristown, Tennessee.
Product/NSN: Clothspin, Plastic/M.R. 570.
NPA: Dallas Lighthouse for the Blind, Inc., Dallas, Texas.
Product/NSN: Cleaner, All Purpose/M.R. 510.
NPA: The Lighthouse of Houston, Houston, Texas.
Product/NSN: Cover, Ironing Board/M.R. 965.
Product/NSN: Pad, Microwave/M.R. 562.
Product/NSN: Pad, Replacement, Handle Scrubber/M.R. 540.
Product/NSN: Pad, Replacement, Handle Scrubber/M.R. 545.
Product/NSN: Pad, Replacement, Handle Scrubber/M.R. 546.
Product/NSN: Pad, Scouring/M.R. 547.
Product/NSN: Scrubber/M.R. 542.
NPA: Beacon Lighthouse, Inc., Wichita Falls, Texas.
Product/NSN: Broom, Upright/M.R. 951.
Product/NSN: Broom, Whisk/M.R. 910.
Product/NSN: Brush, Duster/M.R. 913.
Product/NSN: Executive Twist Pen Shipper/M.R. 009.
NPA: Industries for the Blind, Inc., Milwaukee, Wisconsin.
Product/NSN: Dog Bones/M.R. 405.
Product/NSN: Dog Bones/M.R. 406.
Product/NSN: Dog Bones/M.R. 407.
Product/NSN: Dog Bones/M.R. 408.
Product/NSN: Dog Bones/M.R. 409.
Product/NSN: Dog Bones/M.R. 410.
Product/NSN: Dog Bones/M.R. 411.
NPA: Wiscraft Inc.—Wisconsin Enterprises for the Blind, Milwaukee, Wisconsin.
Product/NSN: Brush, Bottle/M.R. 956.
Product/NSN: Brush, Pastry and Basting/M.R. 959.
Product/NSN: Cover, Ironing Board/M.R. 964.
Product/NSN: Handle, Mop, Spring Lever/M.R. 920.
Product/NSN: Kitchen, Utensils/M.R. 828.
Product/NSN: Kitchen, Utensils/M.R. 850.
Product/NSN: Kitchen, Utensils/M.R. 860.
Product/NSN: Kitchen, Utensils/M.R. 862.
NPA: None currently authorized.
Contract Activity: Defense Commissary Agency (DeCA), Ft. Lee, Virginia, for all the Military Resale Products.
Product/NSN: Enamel/8010–01–336–3978.
NPA: Lighthouse for the Blind, St. Louis, Missouri.
Contract Activity: GSA, Hardware & Appliances Center, Kansas City, Missouri.

Sheryl D. Kennerly,
Director, Information Management.
[FR Doc. 02–17546 Filed 7–11–02; 8:45 am]
BILLING CODE 6353–01–P

BROADCASTING BOARD OF GOVERNORS

Sunshine Act Meeting Notice

Date and Time: July 17, 2002; 10:45 a.m.–3:30 p.m.

Place: RFE/RL Broadcast Center, Room 546, Prague, Czech Republic.

Closed Meeting: The members of the Broadcasting Board of Governors (BBG) will meet in closed session to review and discuss a number of issues relating to U.S. Government-funded non-military international broadcasting. They will address internal procedural, budgetary, and personnel issues, as well as sensitive foreign policy issues relating to potential options in the U.S. international broadcasting field. This meeting is closed because if open it likely would either disclose matters that would be properly classified to be kept secret in the interest of foreign policy under the appropriate executive order (5 U.S.C. 552b. (c)(1)) or would disclose information the premature disclosure of which would be likely to significantly frustrate implementation of a proposed agency action. (5 U.S.C. 552b(c)(9)(B)). In addition, part of the discussion will relate solely to the internal personnel and organizational issues of the BBG or the International Broadcasting Bureau. (5 U.S.C. 552b(c)(2) and (6)).

Contact Person for More Information: Persons interested in obtaining more information should contact either Brenda Hardnett or Carol Booker at (202) 401–3736.

Dated: July 9, 2002.

Carol Booker,
Legal Counsel.
[FR Doc. 02–17623 Filed 7–10–02; 8:53 am]
BILLING CODE 8230–01–M

COMMISSION ON CIVIL RIGHTS

Sunshine Act Meeting

AGENCY: U.S. Commission on Civil Rights.

DATE AND TIME: Friday, July 19, 2002 9 a.m.

PLACE: OMNI Detroit River Place, Hotel, 1000 River Place, Detroit, MI 48207.

STATUS:

Agenda

I. Approval of Agenda
II. Approval of Minutes of June 21, 2002 Meeting
III. Announcements
IV. Staff Director's Report
V. State Advisory Committee Appointments for Florida and Kentucky
VI. Discussion of the Statutory report, ''Ten-Year Check-Up: Have Federal Agencies Responded to Civil Rights Directives?''
VII. Discussion of staff report and recommendations on the civil rights implications of welfare reauthorization
VIII. Presentations from Midwest Regional SAC members on post-9/11 and other civil rights issues in their states, and by individuals and organizational representatives on post-9/11 issues affecting Arab and Muslim Americans in Michigan and the midwestern region
IX. Future Agenda Items

CONTACT PERSON FOR FURTHER INFORMATION: Les Jin, Press and Communications (202) 376–7700.

Debra A. Carr,
Deputy General Counsel.
[FR Doc. 02–17763 Filed 7–10–02; 4:00 pm]
BILLING CODE 6335–01–M

DEPARTMENT OF COMMERCE

International Trade Administration

[A–533–813]

Certain Preserved Mushrooms From India: Final Results of Antidumping Duty Administrative Review

AGENCY: Import Administration, International Trade Administration, Department of Commerce.

ACTION: Notice of final results of antidumping duty administrative review.

SUMMARY: On March 7, 2002, the Department of Commerce published the preliminary results of the second administrative review of the antidumping duty order on certain preserved mushrooms from India (67 FR 10371). The review covers four manufacturers/exporters. The period of review is February 1, 2000, through January 31, 2001.

Based on our analysis of the comments received, we have made changes in the margin calculations. Therefore, the final results differ from the preliminary results. The final weighted-average dumping margins for the reviewed firms are listed below in the section entitled ''Final Results of Review.''

EFFECTIVE DATE: July 12, 2002.

FOR FURTHER INFORMATION CONTACT: David J. Goldberger, Katherine Johnson, or Margarita Panayi, Office 2, AD/CVD Enforcement Group I, Import Administration-Room B099, International Trade Administration, U.S. Department of Commerce, 14th Street and Constitution Avenue, NW., Washington, DC 20230; telephone: (202) 482–4136, (202) 482–4929, or (202) 482–0049, respectively.

SUPPLEMENTARY INFORMATION:

The Applicable Statute

Unless otherwise indicated, all citations to the Tariff Act of 1930, as amended (the Act), are references to the provisions effective January 1, 1995, the effective date of the amendments made to the Act by the Uruguay Round Agreements Act (''URAA''). In addition, unless otherwise indicated, all citations to the Department of Commerce's (the ''Department's'') regulations are to 19 CFR Part 351 (2000).

Background

The review covers four manufacturers/exporters: Agro Dutch Foods Ltd. (''Agro Dutch'') [1], Himalya International Ltd. (''Himalya''), Saptarishi Agro Industries, Inc. (''Saptarishi''), and Weikfield Agro Products Ltd. (''Weikfield''). The period of review is February 1, 2000, through January 31, 2001.

On March 7, 2002, the Department of Commerce published the preliminary results of the second administrative review of the antidumping duty order on certain preserved mushrooms from India (67 FR 10371). We invited parties to comment on the preliminary results of review. On March 20 and 26, 2002, we received requests for a public hearing from respondent Agro Dutch and the petitioners [2], respectively. We received case briefs from the petitioners and Agro Dutch on May 10, 2002. We received rebuttal briefs from the petitioners, Agro Dutch and Weikfield on May 17, 2002. We held a public hearing at the Department on May 22, 2002. We have conducted this administrative review in accordance with section 751 of the Act.

Scope of the Order

The products covered by the order are certain preserved mushrooms, whether imported whole, sliced, diced, or as stems and pieces. The preserved mushrooms covered under the order are the species *Agaricus bisporus* and *Agaricus bitorquis.* ''Preserved mushrooms'' refer to mushrooms that have been prepared or preserved by cleaning, blanching, and sometimes slicing or cutting. These mushrooms are then packed and heated in containers including but not limited to cans or glass jars in a suitable liquid medium, including but not limited to water, brine, butter or butter sauce. Preserved mushrooms may be imported whole, sliced, diced, or as stems and pieces. Included within the scope of the order are ''brined'' mushrooms, which are presalted and packed in a heavy salt solution to provisionally preserve them for further processing.

Excluded from the scope of the order are the following: (1) All other species of mushroom, including straw mushrooms; (2) all fresh and chilled mushrooms, including ''refrigerated'' or ''quick blanched mushrooms'; (3) dried mushrooms; (4) frozen mushrooms; and (5) ''marinated,'' ''acidified'' or ''pickled'' mushrooms, which are prepared or preserved by means of vinegar or acetic acid, but may contain oil or other additives.

The merchandise subject to the order is classifiable under subheadings 2003.10.0027, 2003.10.0031, 2003.10.0037, 2003.10.0043, 2003.10.0047, 2003.10.0053, and 0711.90.4000 of the *Harmonized Tariff Schedule of the United States* (''HTSUS'').[3] Although the HTSUS subheadings are provided for convenience and customs purposes, our written description of the scope of the order is dispositive.

Allegation of Duty Reimbursement

In its January 30, 2002, comments, the petitioners allege that because Agro Dutch and Weikfield are the importers of record for the preserved mushrooms they produce and export to the United States, and, therefore, pay all applicable antidumping cash deposits and duties on this merchandise, they are paying duties on behalf of their respective importers within the meaning of the Department's reimbursement regulation. *See* 19 CFR 351.402(f). In numerous cases, the Department has held that reimbursement within the meaning of the regulation does not occur when the importer and exporter are the same legal entity. Because Agro Dutch and Weikfield function both as the exporter and U.S. importer of the preserved mushrooms they produce, there is no basis for reducing U.S. price under the Department's reimbursement regulation. *See, e.g., Certain Welded Carbon Steel Pipes and Tubes from Thailand: Final Results of Antidumping Duty Administrative Review,* 66 FR 53388 (October 22, 2001), and accompanying Issues and Decision Memorandum at Comment 1. No parties have commented on this issue in the context of this review since the allegation was made on January 30, 2002.

Analysis of Comments Received

All issues raised in the case and rebuttal briefs by parties to this antidumping duty administrative review are addressed in the ''Issues and Decision Memorandum'' (''Decision Memo'') from Richard W. Moreland, Deputy Assistant Secretary for Import Administration, to Faryar Shirzad, Assistant Secretary for Import Administration, dated July 5, 2002, which is hereby adopted by this notice. A list of the issues which parties have

[1] Effective January 8, 2001, Agro Dutch changed its name from ''Agro Dutch Foods Limited''Agro Dutch Industries Limited.''

[2] The petitioners are the Coalition for Fair Preserved Mushroom Trade which includes the American Mushroom Institute and the following domestic companies: L.K. Bowman, Inc.; Modern Mushrooms Farms, Inc.; Monterey Mushrooms, Inc.; Mount Laurel Canning Corp.; Mushrooms Canning Company; Southwood Farms; Sunny Dell Foods, Inc.; and United Canning Corp.

[3] As of January 1, 2002, the HTSUS numbers are as follows: 2003.10.0127, 2003.10.0131, 2003.10.0137, 2003.10.0143, 2003.10.0147, 2003.10.0153, and 0711.51.0000.

raised and to which we have responded, all of which are in the Decision Memo, is attached to this notice as an Appendix. Parties can find a complete discussion of all issues raised in this review and the corresponding recommendations in this public memorandum which is on file in the Central Records Unit, room B–099 of the main Department building. In addition, a complete version of the Decision Memo can be accessed directly on the Web at *http://ia.ita.doc.gov/*. The paper copy and electronic version of the Decision Memo are identical in content.

Changes From the Preliminary Results

Based on our analysis of comments received, we have made certain changes to the margin calculations, including:

- The application of adverse facts available to certain Agro Dutch sales;
- The revision of Agro Dutch's imputed credit expense calculation to include commissions Agro Dutch deducted from the gross price in the calculation;
- The change in the payment date used for calculating imputed credit expenses on unpaid sales made by Agro Dutch and Weikfield from the preliminary results date to the final results date; and
- The revision of the assessment rate calculation for Agro Dutch's and Weikfield's export price sales from a percentage to a per-unit basis.

For a discussion of these changes, see the ''Margin Calculations'' section of the Decision Memo.

Final Results of Review

We determine that the following weighted-average margin percentages exist:

Manufacturer/exporter	Margin (percent)
Agro Dutch Foods Ltd/Agro Dutch Industries Ltd	27.80
Himalya International Ltd	0.68
Saptarishi Agro Industries, Ltd	66.24
Weikfield Agro Products Ltd	0.00

The Department shall determine, and the Customs Service shall assess, antidumping duties on all appropriate entries. In accordance with 19 CFR 351.212(b), we have calculated importer-specific assessment rates. We will direct the Customs Service to assess the resulting rates against the entered units or customs values of the subject merchandise on each importer's entries under the relevant order during the review period. In accordance with 19 CFR 351.106(c)(2), we will instruct the Customs Service to liquidate without regard to antidumping duties all entries of subject merchandise for which the importer-specific assessment rate is zero or *de minimis* (*i.e.,* less than 0.50 percent).

Cash Deposit Requirements

The following deposit requirements will be effective upon publication of this notice of final results of the administrative review for all shipments of certain preserved mushrooms from India entered, or withdrawn from warehouse, for consumption on or after the date of publication, as provided by section 751(a)(1) of the Act: (1) The cash deposit rates for Agro Dutch, Himalya, Saptarishi, and Weikfield will be the rates shown above; (2) for previously reviewed or investigated companies not listed above, the cash deposit rate will continue to be the company-specific rate published for the most recent period; (3) if the exporter is not a firm covered in this review, a prior review, or the original less-than-fair-value (LTFV) investigation, but the manufacturer is, the cash deposit rate will be the rate established for the most recent period for the manufacturer of the merchandise; and (4) the cash deposit rate for all other manufacturers or exporters will continue to be 11.30 percent. This rate is the ''All Others'' rate from the LTFV investigation.

These deposit requirements shall remain in effect until publication of the final results of the next administrative review.

This notice also serves as a final reminder to importers of their responsibility under 19 CFR 351.402(f) to file a certificate regarding the reimbursement of antidumping duties prior to liquidation of the relevant entries during this review period. Failure to comply with this requirement could result in the Secretary's presumption that reimbursement of antidumping duties occurred and the subsequent assessment of doubled antidumping duties.

This notice serves as the only reminder to parties subject to administrative protective order (APO) of their responsibility concerning the disposition of proprietary information disclosed under APO in accordance with 19 CFR 351.305(a)(3). Timely written notification of return/destruction of APO materials or conversion to judicial protective order is hereby requested. Failure to comply with the regulations and the terms of an APO is a sanctionable violation. We are issuing and publishing this determination and notice in accordance with sections section 751(a)(1) and 777(i) of the Act.

Dated: July 5, 2002.

Joseph A. Spetrini,

Acting Assistant Secretary for Import Administration.

Appendix—List of Issues

General Comment

Comment 1: Profit Rate for Constructed Value

Company-Specific Comments

Agro Dutch

Comment 2: Application of Facts Available for Certain U.S. Sales
Comment 3: Treatment of Rejected U.S. Sales
Comment 4: Classification of ''Expenses Written Off''
Comment 5: Classification of Exchange Rate Losses for Notes Payable
Comment 6: Agro Dutch Name Change

Weikfield

Comment 7: Inclusion of Parent Company G&A Expenses in Weikfield's G&A Rate

Saptarishi

Comment 8: Selection of Facts Available Rate

[FR Doc. 02–17592 Filed 7–11–02; 8:45 am]
BILLING CODE 3510–DS–P

DEPARTMENT OF COMMERCE

International Trade Administration

[A–570–851]

Certain Preserved Mushrooms From the People's Republic of China: Final Results of Third New Shipper Review and Final Results and Partial Rescission of Second Antidumping Duty Administrative Review

AGENCY: Import Administration, International Trade Administration, Department of Commerce.

ACTION: Notice of final results of third new shipper review and final results and partial rescission of second antidumping duty administrative review.

SUMMARY: On March 6, 2002, the Department of Commerce published the preliminary results of the third new shipper review and second antidumping duty administrative review of the antidumping duty order on certain preserved mushrooms from the People's Republic of China. *See Certain Preserved Mushrooms from the People's Republic of China: Preliminary Results of New Shipper Review and Preliminary Results and Partial Rescission of Second Antidumping Duty Administrative Review*, 67 FR 10128 (March 6, 2002) (*Preliminary Results*). The new shipper review covers two respondents and the administrative review covers two respondents (*see* ''Background'' section below for further discussion). The

period of review is February 1, 2000, through January 31, 2001. We gave interested parties an opportunity to comment on our preliminary results.

Based on the additional publicly available information used in these final results and the comments received from the interested parties, we have made changes in the margin calculations for the respondents in these reviews. The final weighted-average dumping margins for the reviewed firms in these reviews are listed below in the section entitled ''Final Results of Reviews.''

EFFECTIVE DATE: July 12, 2002.

FOR FURTHER INFORMATION CONTACT: Brian Smith or Sophie Castro, Import Administration, International Trade Administration, U.S. Department of Commerce, Washington, DC 20230; telephone: (202) 482–1766 or (202) 482–0588, respectively.

SUPPLEMENTARY INFORMATION:

The Applicable Statute

Unless otherwise indicated, all citations to the Tariff Act of 1930, as amended (''the Act''), are references to the provisions effective January 1, 1995, the effective date of the amendments made to the Act by the Uruguay Round Agreements Act (''URAA''). In addition, unless otherwise indicated, all citations to the Department of Commerce's (''the Department's'') regulations are to 19 CFR part 351 (2000).

Background

Of the 26 companies [1] for which the Department initiated reviews based on a request made by the petitioners,[2] these reviews now cover only the following four exporters: (1) Gerber; (2) Raoping Xingyu; (3) Shantou Hongda; and (4) Shenxian Dongxing (*see* ''Partial Rescission of Administrative Review'' section below of this notice for further discussion).

On March 6, 2002, the Department published in the **Federal Register** the preliminary results of the third new shipper review and second antidumping duty administrative review of the antidumping duty order on certain preserved mushrooms from the People's Republic of China (''PRC'') (*see Preliminary Results* at 67 FR 10128). On March 26, 2002, and in accordance with 19 CFR 351.301(c)(3)(ii), one of the four respondents, Gerber, submitted additional publicly available information for the Department's consideration in the final results. On April 5, 2002, another respondent, Raoping Xingyu submitted its case brief. On May 29, 2002, the parties withdrew their request for a hearing. The petitioners and Gerber submitted their case and rebuttal briefs on June 4, and June 10, 2002, respectively. Raoping Xingyu did not submit a rebuttal brief. The other two respondents, Shantou Hongda and Shenxian Dongxing, did not file case or rebuttal briefs.

On June 21, 2002, we informed the parties to this proceeding that we considered the data contained in three attachments to the petitioners' case brief to be new factual information pursuant to 19 CFR 351.301(c)(3)(ii). However, we also informed the parties that we considered this information to be relevant to this proceeding and had decided to consider it in these final results. Therefore, because it was filed in an untimely manner in this proceeding, we provided the respondents until June 26, 2002, to submit comments on that new factual information and the petitioners' arguments in reliance on that information. On June 26, 2002, Gerber submitted comments on the use of that information in this proceeding.

The Department has conducted these reviews in accordance with section 751 of the Act.

Scope of the Order

The products covered by this order are certain preserved mushrooms whether imported whole, sliced, diced, or as stems and pieces. The preserved mushrooms covered under this order are the species *Agaricus bisporus and Agaricus bitorquis.* ''Preserved mushrooms'' refer to mushrooms that have been prepared or preserved by cleaning, blanching, and sometimes slicing or cutting. These mushrooms are then packed and heated in containers including, but not limited to, cans or glass jars in a suitable liquid medium, including, but not limited to, water, brine, butter or butter sauce. Preserved mushrooms may be imported whole, sliced, diced, or as stems and pieces. Included within the scope of this order are ''brined'' mushrooms, which are presalted and packed in a heavy salt solution to provisionally preserve them for further processing.

Excluded from the scope of this order are the following: (1) All other species of mushroom, including straw mushrooms; (2) all fresh and chilled mushrooms, including ''refrigerated'' or ''quick blanched mushrooms''; (3) dried mushrooms; (4) frozen mushrooms; and (5) ''marinated,'' ''acidified'' or ''pickled'' mushrooms, which are prepared or preserved by means of vinegar or acetic acid, but may contain oil or other additives.[3]

The merchandise subject to this order is currently classifiable under subheadings 2003.10.0027, 2003.10.0031, 2003.10.0037, 2003.10.0043, 2003.10.0047, 2003.10.0053, and 0711.90.4000 of the *Harmonized Tariff Schedule of the United States* [4] (''HTSUS''). Although the HTSUS subheadings are provided for convenience and customs purposes, the written description of the scope of this order is dispositive.

Partial Rescission of Administrative Review

We have rescinded this review with respect to China Processed, Fujian Yu Xing, and Xiamen Jiahua pursuant to 19 CFR 351.213(d)(1), because the petitioners withdrew their request for review and no other interested party requested a review of these companies. We have also rescinded this review with

[1] The petitioners' request included the following companies: (1) Tak Fat Trading Co. (''Tak Fat''); (2) Mei Wei Food Industry Co., Ltd. (''Mei Wei''); (3) China Processed Food Import & Export Company (''China Processed''); (4) Fujian Yu Xing Fruits and Vegetables Foodstuffs Co., Ltd. (''Fujian Yu Xing''); (5) Raoping Xingyu Foods, Co., Ltd. (''Raoping Xingyu''); (6) Raoping Yucun Canned Foods Factory (''Raoping Yucun''); (7) Shantou Hongda Industrial General Corporation (''Shantou Hongda''); (8) Shenxian Dongxing Foods Co., Ltd. (''Shenxian Dongxing''); (9) Gerber Food (Yunnan) Co., Ltd. (''Gerber''); (10) Green Fresh Foods (Zhangzhou) Co., Ltd. (''Green Fresh''); (11) Zhang Zhou Longhai Lubao Food Co., Ltd. (''Zhang Zhou Longhai''); (12) Citic Ningbo Import & Export Corp., Ltd. (''Citic Ningbo''); (13) Shanghai Foodstuffs Import & Export Corporation (''Shanghai Foodstuffs''); (14) Zhejiang Cereals, Oils & Foodstuffs Import & Export Co., Ltd. (''Zhejiang Cereals''); (15) China Ningbo Canned Food Factory (''China Ningbo''); (16) Longhai Senox Limited (''Longhai Senox''); (17) Beiliu Canned Food Factory (''Beiliu Canned''); (18) Fujian Cereals, Oils & Foodstuffs Import & Export (Group) Corp. (''Fujian Cereals''); (19) Putian Cannery (''Putian''); (20) General Canned Food Factory of Zhangzhou; (21) Jiangsu Cereals, Oils & Foodstuffs Import & Export Group Corp. (''Jiangsu Cereals''); (22) Canned Goods Company of Raoping; (23) Shenzhen Cofry Cereals, Oils & Foodstuffs, Co., Ltd. (''Shenzhen Cofry''); (24) Xiamen Gulong Import & Export Co., Ltd. (''Xiamen Gulong''); (25) Dongya Food Co., Ltd. (''Dongya''); and (26) Xiamen Jiahua Import & Export Trading Co., Ltd. (''Xiamen Jiahua'').

[2] The petitioners are the Coalition for Fair Preserved Mushroom Trade which includes the American Mushroom Institute and the following domestic companies: L.K. Bowman, Inc., Modern Mushroom Farms, Inc., Monterey Mushrooms, Inc., Mount Laurel Canning Corp., Mushrooms Canning Company, Southwood Farms, Sunny Dell Foods, Inc., and United Canning Corp.

[3] On June 19, 2000, the Department affirmed that ''marinated,'' ''acidified,'' or ''pickled'' mushrooms containing less than 0.5 percent acetic acid are within the scope of the antidumping duty order. See ''Recommendation Memorandum—Final Ruling of Request by Tak Fat, *et al.* for Exclusion of Certain Marinated, Acidified Mushrooms from the Scope of the Antidumping Duty Order on Certain Preserved Mushrooms from the People's Republic of China,'' dated June 19, 2000.

[4] As of January 1, 2002, the HTS codes are as follows: 2003.10.0127, 2003.10.0131, 2003.10.0137, 2003.10.0143, 2003.10.0147, 2003.10.0153, and 0711.51.0000.

respect to Shanghai Foodstuffs, Fujian Cereals, and the Canned Goods Company of Raoping pursuant to 19 CFR 351.213(d)(3). Each of these companies reported that it made no shipments of subject merchandise during the period of review (''POR'') in response to the Department's questionnaire. Based on the results of our examination of shipment data furnished by the Customs Service, we are satisfied that these respondents did not ship subject merchandise to the United States during the POR. Moreover, we have rescinded this review with respect to Tak Fat, Mei Wei, Zhang Zhou Longhai, Citic Ningbo, Zhejiang Cereals, China Ningbo, Longhai Senox, Beiliu Canned, Putian, General Canned Food Factory of Zhangzhou, Jiangsu Cereals, Shenzhen Cofry, Xiamen Gulong, and Dongya, because the shipment data furnished by the Customs Service also indicated that there were no U.S. entries of subject merchandise during the POR for these companies. *See Preliminary Results*, 67 FR at 10128.

With respect to Green Fresh, we erred in the preliminary determination by deeming Green Fresh to be an uncooperative respondent based on shipment data furnished by the Customs Service. After further examination and clarification of the response from Green Fresh, we have concluded that the shipment data furnished by the Customs Service reflects a U.S. entry of the subject merchandise which the Department reviewed in a prior new shipper review. *See Final Results of New Shipper Review: Certain Preserved Mushrooms from the People's Republic of China*, 66 FR 45006 (August 27, 2001). Therefore, this shipment is not a sale which the Department needs to consider in this administrative review. As result, pursuant to 19 CFR 351.213(d)(3), we are rescinding this review with respect to Green Fresh because we are satisfied that Green Fresh had no entries of the subject merchandise into the United States during this POR based on data furnished by the Customs Service.

Analysis of Comments Received

All issues raised in the case briefs are addressed in the Issues and Decision Memorandum (''*Decision Memo*'') from Richard W. Moreland, Deputy Assistant Secretary for Import Administration, to Faryar Shirzad, Assistant Secretary for Import Administration, which is hereby adopted by this notice. A list of the issues raised, all of which are in the *Decision Memo*, is attached to this notice as an Appendix. Parties can find a complete discussion of all issues raised in the briefs and the corresponding recommendations in this public memorandum which is on file in the Central Records Unit, room B–099 of the main Department building. In addition, a complete version of the *Decision Memo* can be accessed directly on the Web at *http://ia.ita.doc.gov.* The paper copy and electronic version of the *Decision Memo* are identical in content.

Changes Since the Preliminary Results

Based on the use of additional publicly available information and the comments received from the interested parties, we have made changes in the margin calculation for each respondent. For a discussion of these changes, see the ''Margin Calculations'' section of the *Decision Memo.*

For the final results, we calculated average surrogate percentages for factory overhead, selling, general and administrative expenses, and profit using the 2000–2001 financial reports of Agro Dutch Foods Ltd. (''Agro Dutch'') and Flex Foods Ltd. (''Flex Foods''), and the 1999–2000 financial report of Himalya International Ltd. (''Himalya''). *See Decision Memo* at Comment 5.

We have corrected an error which affected the amount of miscellaneous fixed assets to include in the factory overhead percentage derived from data contained in Himalya's 1999–2000 financial report of an Indian producer of the subject merchandise.

To value fresh mushrooms, we calculated a simple average price based on data contained in the 2000–2001 financial report of Premier Explosives Ltd. (''Premier''), the 1999–2000 financial report of Agro Dutch, and February 2000–January 2001 price data contained in the *Economic Times of India. See Decision Memo* at Comment 1.

For Shantou Hongda and Gerber, we used price data contained in the 1999–2000 financial report, rather than in the 2000–2001 financial report of Agro Dutch to calculate an average POR price for a 68 ounce can since the 1999–2000 financial report contained specific price data in that report. For Raoping Xingyu, we used its reported market-economy prices to value this input. *See Decision Memo* at Comment 4.

To value spawn and cattle manure, we used data from the 2000–2001 financial reports of Agro Dutch and Flex Foods.

To value straw, we calculated an average price based on the wheat straw value from Agro Dutch's 2000–2001 financial report and the general straw value from Flex Foods' 2000–2001 financial report. *See Decision Memo* at Comment 3.

To value grain and super phosphate, we used data from Flex Foods' 2000–2001 financial report.

To value super potassium, we used a POR value from the publication *Chemical Weekly*.

Since the surrogate value for salt was not contemporaneous with the POR, we adjusted this value for inflation using wholesale price indices published in the International Monetary Fund's *International Financial Statistics*.

With respect to Gerber, we have corrected arithmetical errors which affected the calculation of electricity costs associated with its spawn production, the cost of the mushrooms it purchased for use in the brining stage of production, and the cost of cans it used in the processing stage of production.

We have removed language in the SAS program used for Raoping Xingyu which overwrote data for two control numbers and have assigned to each distinct product code the factors contained in Raoping Xingyu's May 9, 2002, supplemental response. In addition we have corrected the scrap value in Raoping Xingyu's margin program.

To account for different drained weight capacities of various sizes of cans used by one respondent (*i.e.,* Shantou Hongda) and purchased by another respondent (*i.e.,* Raoping Xingyu), we have calculated for each can size a price per drained weight based on the price per piece obtained from surrogate value data. Since Shenxian Dongxing produced its own cans and Gerber reported its can usage on a piece basis rather than on a kilogram basis, we did not need to make the above-noted adjustment for those companies. *See Decision Memo* at Comment 10.

Final Results of Reviews

We determine that the following weighted-average margin percentages exist for the period February 1, 2000, through January 31, 2001:

Exporter	Margin (percent)
Gerber Food (Yunnan) Co., Ltd.	14.79
Raoping Xingyu Foods, Co., Ltd.	161.57
Shantou Hongda Industrial General Corporation	0.00
Shenxian Dongxing Foods Co., Ltd.	0.00

Assessment Rates

The Department shall determine, and the Customs Service shall assess, antidumping duties on all appropriate entries. In accordance with 19 CFR

351.106(c)(2), we will instruct the Customs Service to liquidate without regard to antidumping duties all entries of subject merchandise during the POR from each respondent for which the import-specific assessment rate is zero or *de minimis* (*i.e.*, less than 0.50 percent). In accordance with 19 CFR 351.212(b), we have calculated importer-specific ad valorem duty assessment rates. We will direct the Customs Service to assess the resulting percentage margin against the entered Customs values for the subject merchandise on each of that importer's entries under the relevant order during the review period.

Cash Deposit Requirements

The following deposit rates shall be required for merchandise subject to the order entered, or withdrawn from warehouse, for consumption on or after the publication date of these final results, as provided by section 751(a)(1) and 751(a)(2)(B) of the Act: (1) The cash deposit rates for Gerber, Raoping Xingyu, Shantou Hongda, and Shenxian Dongxing will be the rates indicated above; (2) the cash deposit rate for PRC exporters for whom the Department has rescinded the review or for whom a review was not requested for this POR (*i.e.,* China Processed, Fujian Yu Xing, Xiamen Jiahua, Fujian Cereals, Shanghai Foodstuffs, the Canned Goods Company of Raoping, Tak Fat, Mei Wei, Zhang Zhou Longhai, Citic Ningbo, Zhejiang Cereals, China Ningbo, Longhai Senox, Beiliu Canned, Putian, General Canned Food Factory of Zhangzhou, Jiangsu Cereals, Shenzhen Cofry, Xiamen Gulong, and Dongya) will continue to be the rate assigned in an earlier segment of the proceeding or the PRC-wide rate of 198.63 percent; (3) the cash deposit rate for all other PRC exporters will continue to be 198.63 percent; and (4) the cash deposit rate for non-PRC exporters of subject merchandise from the PRC will be the rate applicable to the PRC supplier of that exporter. These deposit requirements shall remain in effect until publication of the final results of the next administrative review.

This notice also serves as a final reminder to importers of their responsibility under 19 CFR 351.402(f)(2) to file a certificate regarding the reimbursement of antidumping duties prior to liquidation of the relevant entries during this review period. Failure to comply with this requirement could result in the Secretary's presumption that reimbursement of antidumping duties occurred and the subsequent assessment of doubled antidumping duties.

This notice also serves as the only reminder to parties subject to administrative protective orders (APO) of their responsibility concerning the return or destruction of proprietary information disclosed under APO in accordance with 19 CFR 351.305(a). Timely written notification of the return/destruction of APO materials or conversion to judicial protective order is hereby requested. Failure to comply with the regulations and terms of an APO is a violation which is subject to sanction.

We are issuing and publishing this determination and notice in accordance with sections section 751(a)(1), 751(a)(2)(B), and 777(i) of the Act and 19 CFR 351.213 and 351.214.

Dated: July 5, 2002.

Joseph A. Spetrini,

Acting Assistant Secretary for Import Administration.

Appendix—Issues in Decision Memo

Comments

1. Surrogate Value Selection for Fresh Mushrooms.
2. Surrogate Value Selection for Furnace Oil.
3. Surrogate Value Selection for Straw.
4. Surrogate Value Selection for Cans and Lids.
5. Whether to Use Data Contained in More Current Financial Reports Submitted for Two Indian Producers of the Subject Merchandise.
6. How to Treat Water Costs.
7. Whether to Use Domestic Rather than Import Surrogate Values.
8. Whether to Inflate Certain Surrogate Values Which Cover a Portion of the Period of Review.
9. Whether to Inflate U.S. Dollar-Denominated Surrogate Values to the POR.
10. Whether to Adjust Factors Reported by Raoping Xingyu for Certain Can Sizes.
11. Whether to Adjust Factors Reported by Shantou Hongda and Shenxian Dongxing.
12. The Use of Information Contained in the Petitioners' Case Brief.

[FR Doc. 02–17593 Filed 7–11–02; 8:45 am]

BILLING CODE 3510–DS–P

DEPARTMENT OF COMMERCE

International Trade Administration

[A–570–601]

Tapered Roller Bearings and Parts Thereof, Finished and Unfinished, From the People's Republic of China; Amended Final Results of Antidumping Duty Administrative Review

AGENCY: Import Administration, International Trade Administration, Department of Commerce.

ACTION: Notice of final court decision and amended final results of administrative review.

SUMMARY: The United States Court of International Trade has affirmed the Department of Commerce's final remand results affecting the final weighted-average margins for the 1995/1996 administrative review of the antidumping duty order on tapered roller bearings and parts thereof, finished and unfinished, from the People's Republic of China. There was no appeal to the United States Court of Appeals for the Federal Circuit. As there is now a final and conclusive court decision in this case, we are amending the final results of review and we will instruct the Customs Service to liquidate entries subject to this review. The period of review is June 1, 1995, through May 31, 1996.

EFFECTIVE DATE: July 12, 2002.

FOR FURTHER INFORMATION CONTACT: George Callen or Richard Rimlinger, Import Administration, International Trade Administration, U.S. Department of Commerce, 14th Street and Constitution Avenue, NW., Washington, DC 20230; telephone (202) 482–0180 or (202) 482–4477, respectively.

SUPPLEMENTARY INFORMATION:

Applicable Statute

Unless otherwise indicated, all citations to the statute are references to the provisions effective January 1, 1995, the effective date of the amendments made to the Tariff Act of 1930 (the Act) by the Uruguay Round Agreements Act (URAA).

Background

On November 17, 1997, the Department published the final results of administrative review of the antidumping duty order on tapered roller bearings and parts thereof, finished and unfinished (TRBs), from the People's Republic of China covering the period June 1, 1995, through May 31, 1996. *See Tapered Roller Bearings and Parts Thereof, Finished and Unfinished, From the People's Republic of China, Final Results of Antidumping Duty Administrative Review,* 62 FR 61276 (November 17, 1997) (Final Results).

The Timken Company contested the Department's decision in the Final Results. In issuing its decision in this case, the United States Court of International Trade (CIT) instructed the Department to make the following changes to its margin calculations for the Final Results: (1) Determine direct labor costs without relying on labor hours and, if necessary, open the record;

(2) exclude the ''purchases of traded goods'' from its calculation of the cost of manufacturing; (3) adjust United States price by recalculating marine insurance pursuant to a value-based methodology; and (4) correct clerical errors in the calculation of the weight of scrap for one of the Chinese producers. *See Timken Company* v. *United States,* Court No. 97–12–02156, Slip Op. 01–96 (CIT August 9, 2001).

In its instructions, the CIT did not refer to companies by name. Accordingly, in implementing the court's instructions for determining direct labor costs without relying on labor hours, excluding the ''purchases of traded goods'' in calculating the cost of manufacturing, and adjusting United States price by recalculating marine insurance pursuant to a value-based methodology, we calculated the changes for all companies for which we had data and for which we had performed calculations to arrive at the weighted-average dumping margins in the Final Results. For one company, Guizhou Machinery Import and Export Corp. (Guizou), this resulted in a change in margin from 21.79 percent to 31.05. This new margin is also the highest overall margin calculated in any segment of this proceeding.

The Department issued final results of redetermination on remand on December 13, 1999. The CIT affirmed the Department's final remand results and dismissed the case. *See Timken Company* v. *United States,* Slip Op. 02–30 (CIT March 20, 2002). There was no appeal to the United States Court of Appeals for the Federal Circuit. As there is now a final and conclusive court decision in this action, we are amending our final results of review and we will instruct the Customs Service to liquidate entries subject to this review.

Amendment to Final Results

Pursuant to section 516A(e) of the Act, we are now amending the final results of administrative review of the antidumping duty order on TRBs from the People's Republic of China for the period of review June 1, 1995, through May 31, 1996. In the original Final Results, we established margins for Jilin Machinery Import & Export Corporation (Jilin) and the PRC-wide rate on the basis of total adverse facts available and selected the highest ovrall margin calculated in any segment of the proceeding. As noted above, that rate is now 31.05 percent, the rate calculated for Guizhou in the final results of redetermination on remand. Accordingly, we are amending the rate for Jilin and the PRC-wide rate consistent with those final results of redetermination on remand.

Company	Margin
Peer Bearing Co. and Chin Jun Industrial Ltd.	3.07
China National Machinery Import and Export Corp. (CMC)	3.05
Guizhou Machinery Import and Export Corp.	31.05
Liaoning MEC Group Co., Ltd.	0.61
Luoyang Bearing Factory	3.84
Premier Bearing and Equipment, Ltd.	5.60
Shandong Machinery and Equipment Import and Export Corp.	19.13
Wanxiang Group Corp.	0.11
Xiangfan Machinery Foreign Trade Corp.	0.49
Zhejiang Machinery Import and Export Corp.	0.17
Jilin	31.05
PRC Wide Rate	31.05

Accordingly, the Department will determine and the Customs Service will assess appropriate antidumping duties on entries of the subject merchandise exported by firms covered by this review.

We are issuing and publishing this determination in accordance with section 751(a) of the Act.

Dated: July 3, 2002.

Joseph A. Spetrini,

Acting Assistant Secretary for Import Administration.

[FR Doc. 02–17591 Filed 7–11–02; 8:45 am]

BILLING CODE 3510–DS–P

DEPARTMENT OF COMMERCE

National Oceanic and Atmospheric Administration

[I.D. 070902A]

Gulf of Mexico Fishery Management Council; Public Meeting

AGENCY: National Marine Fisheries Service (NMFS), National Oceanic and Atmospheric Administration (NOAA), Commerce.

ACTION: Notice of public meeting.

SUMMARY: The Gulf of Mexico Fishery Management Council (Council) will convene a public meeting of the Mackerel Advisory Panel (AP).

DATES: The AP meeting is scheduled to begin at 8:30 a.m. on July 29, 2002 and will conclude by 3 p.m.

ADDRESSES: The meeting will be held at the New Orleans Airport Hilton Hotel, 901 Airline Highway, Kenner, LA; telephone: 504–469–5000.

Council address: Gulf of Mexico Fishery Management Council, 3018 U.S. Highway 301 North, Suite 1000, Tampa, FL 33619.

FOR FURTHER INFORMATION CONTACT: Dr. Richard Leard, Senior Fishery Biologist, Gulf of Mexico Fishery Management Council; telephone: 813–228–2815.

SUPPLEMENTARY INFORMATION: The Mackerel AP will convene to review a report of the Mackerel Stock Assessment Panel (MSAP) that includes status of stock information on Gulf Group king mackerel and little tunny, as well as the range of acceptable biological catch (ABC). The Mackerel AP will also review the report of the Socioeconomic Panel (SEP) on these stocks and may make recommendations to the Council for additional management measures based on these reviews. The Mackerel AP will also receive reports on the status of the Dolphin/Wahoo Fishery Management Plan (FMP) that is being developed jointly with the South Atlantic and Caribbean Fishery Management Councils and a regulatory amendment to establish definitions of maximum sustainable yield (MSY), optimum yield (OY), overfishing, and the overfished condition for mackerel and cobia stocks in the Gulf. the various shrimp stocks in the Gulf.

Although other non-emergency issues not on the agendas may come before the Mackerel AP for discussion, in accordance with the Magnuson-Stevens Fishery Conservation and Management Act, those issues may not be the subject of formal action during the meeting. Actions of the Mackerel AP will be restricted to those issues specifically identified in the agendas and any issues arising after publication of this notice that require emergency action under Section 305(c) of the Magnuson-Stevens Act, provided the public has been notified of the Council's intent to take action to address the emergency.

Copies of the agenda can be obtained by calling 813–228–2815.

Special Accommodations

This meeting is physically accessible to people with disabilities. Requests for sign language interpretation or other auxiliary aids should be directed to Anne Alford at the Council (see **ADDRESSES**) by July 22, 2002.

Dated: July 9, 2002.

Richard W. Surdi,

Acting Director, Office of Sustainable Fisheries, National Marine Fisheries Service.

[FR Doc. 02–17557 Filed 7–11–02; 8:45 am]

BILLING CODE 3510–22–S

DEPARTMENT OF COMMERCE

National Oceanic and Atmospheric Administration

[I.D. 070802E]

Mid-Atlantic Fishery Management Council; Public Meeting

AGENCY: National Marine Fisheries Service (NMFS), National Oceanic and Atmospheric Administration (NOAA), Commerce.

ACTION: Notice of public meetings.

SUMMARY: The Mid-Atlantic Fishery Management Council's (Council) Summer Flounder Monitoring Committee, Scup Monitoring Committee, Black Sea Bass Monitoring Committee, and Bluefish Monitoring Committee will hold public meetings.

DATES: The meetings will be held on Thursday, July 25, 2002, beginning at 9 a.m.

ADDRESSES: This meeting will be held at the Holiday Inn BWI, 890 Elkridge Landing Road, Linthicum, MD; telephone: 410–859–8400.

Council address: Mid-Atlantic Fishery Management Council, Room 2115, 300 S. New Street, Dover, DE 19904.

FOR FURTHER INFORMATION CONTACT: Daniel T. Furlong, Executive Director, Mid-Atlantic Fishery Management Council; telephone: 302–674–2331, ext. 19.

SUPPLEMENTARY INFORMATION: The purpose of these meetings is to recommend the 2003 commercial management measures, commercial quotas, and recreational harvest limits for summer flounder, scup, and black sea bass. The Bluefish Monitoring Committee will meet to recommend commercial management measures, recreational management measures, and a commercial quota and recreational harvest limit for bluefish for 2003.

Although non-emergency issues not contained in this agenda may come before this group for discussion, those issues may not be the subject of formal action during this meeting. Action will be restricted to those issues specifically identified in this notice and any issues arising after publication of this notice that require emergency action under section 305(c) of the Magnuson-Stevens Fishery Conservation and Management Act, provided the public has been notified of the Council's intent to take final action to address the emergency.

Special Accommodations

This meeting is physically accessible to people with disabilities. Requests for sign language interpretation or other auxiliary aids should be directed to Joanna Davis at the Council Office (see **ADDRESSES**) at least 5 days prior to the meeting date.

Dated: July 9, 2002.

Richard W. Surdi,

Acting Director, Office of Sustainable Fisheries, National Marine Fisheries Service.

[FR Doc. 02–17559 Filed 7–11–02; 8:45 am]

BILLING CODE 3510–22–S

DEPARTMENT OF COMMERCE

National Oceanic and Atmospheric Administration

[I.D. 070202D]

Pacific Fishery Management Council; Public Meeting

AGENCY: National Marine Fisheries Service (NMFS), National Oceanic and Atmospheric Administration (NOAA), Commerce.

ACTION: Notice of public meeting.

SUMMARY: The Pacific Fishery Management Council's (Council) Groundfish Management Team (GMT) will hold a working meeting which is open to the public.

DATES: The GMT working meeting will begin Monday, July 29, 2001 at 1 p.m. and may go into the evening until business for the day is completed. The meeting will reconvene from 8 a.m. to 5 p.m. Tuesday, July 30 through Friday, August 2.

ADDRESSES: The meetings will be held at: Pacific Fishery Management Council, 7700 NE Ambassador Place, Suite 200, Portland, OR 97220–1384, (503) 820–2280.

Council address: Pacific Fishery Management Council, 7700 NE Ambassador Place, Suite 200, Portland, OR 97220–1384.

FOR FURTHER INFORMATION CONTACT: John DeVore, Groundfish Fishery Management Coordinator; telephone: (503) 820–2280.

SUPPLEMENTARY INFORMATION: The primary purpose of the GMT meeting is to prepare final recommendations regarding groundfish harvest levels and management for 2003. The GMT will also prepare reports, recommendations, and analyses in support of various Council decisions through the remainder of the year. The following specific items comprise the draft agenda: (1) prepare final acceptable biological catch (ABC) and optimum yield (OY) recommendations for 2003, (2) calculate limited entry, open access, and other allocations, (3) evaluate management options and the Environmental Assessment of Proposed Groundfish Management Measures and Specifications for 2003, (4) complete and/or review economic/social analysis of proposed harvest levels and management measures for 2003, (5) evaluate a restructured bycatch model, (6) complete and/or review rebuilding plans for overfished groundfish stocks,(7) resolve any outstanding recreational data issues and evaluate the need for inseason management adjustments, (8) consider recommending any Exempted Fishing Permits, (9) evaluate Programmatic Environmental Impact Statements, (10) recommend 2003 groundfish stock assessment priorities, (11) evaluate issues and consider recommendations for delegating nearshore management authority to the states, (12) consider recommendations for FMP Amendment 17 and multi-year management issues, (13) consider recommendations for marine reserve proposals for Channel Island National Marine Sanctuary, and (14) other miscellaneous Council groundfish issues.

Although non-emergency issues not contained in this agenda may come before the GMT for discussion, those issues may not be the subject of formal GMT action during this meeting. GMT action will be restricted to those issues specifically listed in this notice and any issues arising after publication of this notice that require emergency action under section 305(c) of the Magnuson-Stevens Fishery Conservation and Management Act, provided the public has been notified of the GMT's intent to take final action to address the emergency.

Special Accommodations

The meeting is physically accessible to people with disabilities. Requests for sign language interpretation or other auxiliary aids should be directed to Ms. Carolyn Porter at (503) 820–2280 at least 5 days prior to the meeting date.

Dated: July 9, 2002.

Richard W. Surdi,

Acting Director, Office of Sustainable Fisheries, National Marine Fisheries Service.

[FR Doc. 02–17558 Filed 7–11–02; 8:45 am]

BILLING CODE 3510–22–S

DEPARTMENT OF COMMERCE

National Oceanic and Atmospheric Administration

[I.D. 070102G]

Endangered Species; File No. 1389

AGENCY: National Marine Fisheries Service (NMFS), National Oceanic and

Atmospheric Administration (NOAA), Commerce.

ACTION: Receipt of application.

SUMMARY: Notice is hereby given that Dr. Stephen J. Morreale, Department of Natural Resources, Cornell University, Ithaca, NY 14853, has applied in due form for a permit to take loggerhead turtles (*Caretta caretta*), Kemp's ridley turtles (*Lepidochelys kempii*), green turtles (*Chelonia mydas*), and Leatherback turtles (*Dermochelys coriacea*) for purposes of scientific research.

DATES: Written or telefaxed comments must be received on or before August 12, 2002.

ADDRESSES: The application and related documents are available for review upon written request or by appointment in the following office(s):

Permits, Conservation and Education Division, Office of Protected Resources, NMFS, 1315 East-West Highway, Room 13705, Silver Spring, MD 20910; phone (301)713–2289; fax (301)713–0376; and

Northeast Region, NMFS, One Blackburn Drive, Gloucester, MA 01930–2298; phone (978)281–9200; fax (978)281–9371.

FOR FURTHER INFORMATION CONTACT: Lillian Becker or Ruth Johnson, (301)713–2289.

SUPPLEMENTARY INFORMATION: The subject permit is requested under the authority of the Endangered Species Act of 1973, as amended (ESA; 16 U.S.C. 1531 *et seq.*) and the regulations governing the taking, importing, and exporting of endangered and threatened species (50 CFR 222–226).

The purpose of this research is to re-institute a long-term mark-recapture study in order to monitor the population levels and health status of sea turtles inhabiting the Long Island Sound and Peconic Bay Estuaries. The turtles will be captured in pound nets then flipper and PIT tagged, blood sampled, biopsied, and released near their capture site. The researcher requests to be able to take 126 loggerhead, 52 Kemp's ridley, 45 green and 3 leatherback sea turtles.

In compliance with the National Environmental Policy Act of 1969 (42 U.S.C. 4321 *et seq.*), an initial determination has been made that the activity proposed is categorically excluded from the requirement to prepare an environmental assessment or environmental impact statement.

Written comments or requests for a public hearing on this application should be mailed to the Chief, Permits, Conservation and Education Division, F/PR1, Office of Protected Resources, NMFS, 1315 East-West Highway, Room 13705, Silver Spring, MD 20910. Those individuals requesting a hearing should set forth the specific reasons why a hearing on this particular request would be appropriate.

Comments may also be submitted by facsimile at (301)713–0376, provided the facsimile is confirmed by hard copy submitted by mail and postmarked no later than the closing date of the comment period. Please note that comments will not be accepted by e-mail or by other electronic media.

Dated: July 8, 2002.

Eugene T. Nitta,

Acting Chief, Permits, Conservation and Education Division, Office of Protected Resources, National Marine Fisheries Service.

[FR Doc. 02–17561 Filed 7–11–02; 8:45 am]

BILLING CODE 3510–22–S

DEPARTMENT OF COMMERCE

National Oceanic and Atmospheric Administration

[I.D. 062702A]

Marine Mammals; File Nos. 782–1676 and 1032–1679

AGENCY: National Marine Fisheries Service (NMFS), National Oceanic and Atmospheric Administration (NOAA), Commerce.

ACTION: Receipt of applications.

SUMMARY: Notice is hereby given that the following applicants have applied in due form for a permit to take marine mammals for scientific research:

National Marine Mammal Laboratory, 7600 Sand Point Way N.E., BIN C15700, Seattle, WA, 98115; and

Dr. Robert A. Garrott, Ecology Department, Montana State University, 310 Lewis Hall, Bozeman, MT 59717.

DATES: Written or telefaxed comments must be received on or before August 12, 2002.

ADDRESSES: The applications and related documents are available for review upon written request or by appointment in the following office(s):

Permits, Conservation and Education Division, Office of Protected Resources, NMFS, 1315 East-West Highway, Room 13705, Silver Spring, MD 20910; phone (301)713–2289; fax (301)713–0376; and

Northwest Region, NMFS, 7600 Sand Point Way NE, BIN C15700, Bldg. 1, Seattle, WA 98115–0700; phone (206)526–6150; fax (206)526–6426 (File 782–1676 only); and

Alaska Region, NMFS, P.O. Box 21668, Juneau, AK 99802–1668; phone (907)586–7221; fax (907)586–7249.

FOR FURTHER INFORMATION CONTACT: Carrie Hubard or Ruth Johnson, (301)713–2289.

SUPPLEMENTARY INFORMATION: The subject permits are requested under the authority of the Marine Mammal Protection Act of 1972, as amended (MMPA; 16 U.S.C. 1361 *et seq.*) and the Regulations Governing the Taking and Importing of Marine Mammals (50 CFR part 216).

For Permit No. 782–1676, the applicant proposes to take Alaska harbor seals and spotted seals to estimate population size and trend, current and net productivity rates, and current takes by commercial fisheries and subsistence hunters. One component of the research is to determine the relative proportion of seals at sea that are not counted during aerial census surveys.

For Permit No. 1032–1679, the applicant proposes to take Weddell seals (*Leptonychotes weddellii*) by capture, tag and release and conduct census surveys for population estimates on McMurdo Sound, Antarctica. Other species that may be incidentally taken are crabeater seal (*Lobodon carcinophagus*), leopard seal (*Hydrurga leptonyx*), Ross seal (*Ommatophoca rossii*), southern elephant seal (*Mirounga leonina*) and Antarctic fur seal (*Arctocephalus gazella*).

In compliance with the National Environmental Policy Act of 1969 (42 U.S.C. 4321 *et seq.*), an initial determination has been made that the activity proposed is categorically excluded from the requirement to prepare an environmental assessment or environmental impact statement.

Written comments or requests for a public hearing on these applications should be mailed to the Chief, Permits, Conservation and Education Division, F/PR1, Office of Protected Resources, NMFS, 1315 East-West Highway, Room 13705, Silver Spring, MD 20910. Those individuals requesting a hearing should set forth the specific reasons why a hearing on the particular request would be appropriate.

Comments may also be submitted by facsimile at (301)713–0376, provided the facsimile is confirmed by hard copy submitted by mail and postmarked no later than the closing date of the comment period. Please note that comments will not be accepted by e-mail or by other electronic media.

Concurrent with the publication of this notice in the **Federal Register**, NMFS is forwarding copies of these applications to the Marine Mammal Commission and its Committee of Scientific Advisors.

Dated: July 8, 2002.

Eugene T. Nitta,

Acting Chief, Permits, Conservation and Education Division, Office of Protected Resources, National Marine Fisheries Service.

[FR Doc. 02–17556 Filed 7–11–02; 8:45 am]

BILLING CODE 3510–22–S

DEPARTMENT OF COMMERCE

National Oceanic and Atmospheric Administration

[I.D. 062802A]

Marine Mammals; File Application No. 112–1684

AGENCY: National Marine Fisheries Service (NMFS), National Oceanic and Atmospheric Administration (NOAA), Commerce.

ACTION: Receipt of application.

SUMMARY: Notice is hereby given that Point Defiance Zoo and Aquarium, 5400 North Pearl Street, Tacoma, WA 98407, has applied in due form for a permit to import one harbor seal (*Phoca vitulina richardsi*) for the purposes of public display.

DATES: Written or telefaxed comments must be received on or before August 12, 2002.

ADDRESSES: The application and related documents are available for review upon written request or by appointment in the following office(s):

Permits, Conservation and Education Division, Office of Protected Resources, NMFS, 1315 East-West Highway, Room 13705, Silver Spring, MD 20910; phone (301)713–2289; fax (301)713–0376; and

Regional Administrator, Northwest Region, NMFS, 7600 Sand Point Way NE, BIN C15700, Bldg. 1, Seattle, WA 98115–0700; phone (206)526–6150; fax (206)526–6426.

Written comments or requests for a public hearing on this request should be submitted to the Chief, Permits, Conservation and Education Division, F/PR1, Office of Protected Resources, NMFS, 1315 East-West Highway, Room 13705, Silver Spring, MD 20910. Those individuals requesting a hearing should set forth the specific reasons why a hearing on this particular permit request would be appropriate.

Comments may also be submitted by facsimile at (301)713–0376, provided the facsimile is confirmed by hard copy submitted by mail and postmarked no later than the closing date of the comment period. Please note that comments will not be accepted by e-mail or other electronic media.

FOR FURTHER INFORMATION CONTACT: Jennifer Skidmore or Jill Lewandowski,(301)713–2289.

SUPPLEMENTARY INFORMATION: The subject application for Permit No. 112–1684–00 is requested under the authority of the Marine Mammal Protection Act of 1972, as amended (16 U.S.C. 1361 *et seq.*), and the Regulations Governing the Taking and Importing of Marine Mammals (50 CFR part 216).

The applicant requests authorization to import one harbor seal (Phoca vitulina richardsi), from the Island Wildlife Natural Care Centre, Salt Spring Island, British Columbia, Canada, to Point Defiance Zoo and Aquarium in Tacoma, WA. The applicant requests this import for the purpose of public display. The receiving facility, Point Defiance Zoo and Aquarium, 5400 North Pearl Street, Tacoma, WA 98407 is: (1) open to the public on regularly scheduled basis with access that is not limited or restricted other than by charging an admission fee; (2) offers an educational program based on professionally accepted standards of the American Zoo and Aquarium Association and the Alliance for Marine Mammal Parks and Aquariums; and (3) holds an Exhibitor's License, number 91–C–0003, issued by the U.S. Department of Agriculture under the Animal Welfare Act.

In addition to determining whether the applicant meets the three public display criteria, NMFS must determine whether the applicant has demonstrated that the proposed activity is humane and does not represent any unnecessary risks to the health and welfare of marine mammals; that the proposed activity by itself or in combination with other activities, will not likely have a significant adverse impact on the species or stock; and that the applicant's expertise, facilities and resources are adequate to accomplish successfully the objectives and activities stated in the application.

In compliance with the National Environmental Policy Act of 1969 (42 U.S.C. 4321 *et seq.*), an initial determination has been made that the activity proposed is categorically excluded from the requirement to prepare an environmental assessment or environmental impact statement.

Concurrent with the publication of this notice in the **Federal Register**, NMFS is forwarding copies of this application to the Marine Mammal Commission and its Committee of Scientific Advisors.

Dated: July 5, 2002.

Eugene T. Nitta,

Acting Chief, Permits, Conservation and Education Division, Office of Protected Resources, National Marine Fisheries.

[FR Doc. 02–17560 Filed 7–11–02; 8:45 am]

BILLING CODE 3510–22–S

DEPARTMENT OF DEFENSE

[OMB Control Number 0704–0187]

Information Collection Requirement; Defense Federal Acquisition Regulation Supplement; DoD Acquisition Process (Solicitation Phase)

AGENCY: Department of Defense (DoD).

ACTION: Notice and request for comments regarding a proposed extension of an approved information collection requirement.

SUMMARY: In compliance with section 3506(c)(2)(A) of the Paperwork Reduction Act of 1995 (44 U.S.C. Chapter 35), DoD announces the proposed extension of a public information collection requirement and seeks public comment on the provisions thereof. DoD invites comments on: (a) Whether the proposed collection of information is necessary for the proper performance of the functions of DoD, including whether the information will have practical utility; (b) the accuracy of the estimate of the burden of the proposed information collection; (c) ways to enhance the quality, utility, and clarity of the information to be collected; and (d) ways to minimize the burden of the information collection on respondents, including the use of automated collection techniques or other forms of information technology. The Office of Management and Budget (OMB) has approved this information collection requirement for use through December 31, 2002. DoD proposes that OMB extend its approval for 3 additional years.

DATES: DoD will consider all comments received by September 10, 2002.

ADDRESSES: Respondents may submit comments directly on the World Wide Web at *http://emissary.acq.osd.mil/dar/dfars.nsf/pubcomm.* As an alternative, respondents may e-mail comments to: *dfars@acq.osd.mil.* Please cite OMB Control Number 0704–0187 in the subject line of e-mailed comments.

Respondents that cannot submit comments using either of the above methods may submit comments to: Defense Acquisition Regulations Council, Attn: Ms. Amy Williams, OUSD(AT&L)DP(DAR), IMD 3C132,

3062 Defense Pentagon, Washington, DC 20301–3062; facsimile (703) 602–0350. Please cite OMB Control Number 0704–0187.

At the end of the comment period, interested parties may view public comments on the World Wide Web at *http://emissary.acq.osd.mil/dar/dfars.nsf.*

FOR FURTHER INFORMATION CONTACT: Ms. Amy Williams, (703) 602–0328. The information collection requirement addressed in this notice is available electronically on the World Wide Web at: *http://www.acq.osd.mil/dp/dars/dfars.html.* Paper copies are available from Ms. Amy Williams, OUSD(AT&L)DP(DAR), IMD 3C132, 3062 Defense Pentagon, Washington, DC 20301–3062.

SUPPLEMENTARY INFORMATION:

Title and OMB Number: Information Collection in Support of the DoD Acquisition Process (Solicitation Phase), OMB Control Number 0704–0187.

Needs and Uses: This information collection requirement pertains to information that an offeror must submit to DoD in response to a request for proposals or an invitation for bids. DoD uses this information to evaluate offers; determine whether the offered price is fair and reasonable; and determine which offeror to select for contract award. DoD also uses this information in determining whether to provide precious metals as Government-furnished material; whether to accept alternate preservation, packaging, or packing; and whether to trade in existing personal property toward the purchase of new items.

Affected Public: Businesses or other for-profit and not-for-profit institutions.

Annual Burden Hours: 9,870,858.

Number of Respondents: 161,355.

Responses Per Respondent: Approximately 12.

Annual Responses: 1,954,238.

Average Burden Per Response: 5.05 hours.

Frequency: On occasion.

Summary of Information Collection

This information collection pertains to information, not separately covered by another OMB clearance, that an offeror must submit to DoD in response to a request for proposals or an invitation for bids. In particular, the information collection covers the following DFARS requirements:

- 217.70, Exchange of Personal Property. Section 217.7004, paragraph (a), of this subpart requires that solicitations that contemplate exchange (trade-in) of personal property, and application of the exchange allowance to the acquisition of similar property, must include a request for offerors to state prices for the new items being acquired both with and without any exchange allowance.
- 217.72, Bakery and Dairy Products. Section 217.7201, paragraph (b)(2), of this subpart requires a contractor's list of cabinet equipment in the Schedule of the contract, when the contractor is required to furnish its own cabinets for dispensing milk from bulk containers.
- 217.74, Undefinitized Contract Actions. Unless an exception in 217.7404–5 of this subpart applies, paragraph (b) of 217.7404–3 requires the contractor to submit a qualifying proposal in accordance with the definitization schedule of the undefinitized contract action. A ''qualifying proposal'' is defined in paragraph (c) of 217.7401 as a proposal containing sufficient information for DoD to do complete and meaningful analyses and audits of the information in the proposal and any other information that the contracting officer has determined that DoD needs to review in connection with the contract.
- 217.75, Acquisition of Replenishment Parts. Paragraph (d) of 217.7504 of this subpart permits contracting officers to include, in sole-source solicitations for replenishment parts, a provision requiring an offeror to supply, with its proposal, price and quantity data on any Government orders for the replenishment part issued within the most recent 12 months.
- 252.208–7000, Intent to Furnish Precious Metals as Government-Furnished Material. Paragraph (b) of this clause requires an offeror to cite the type and quantity of precious metals required in the performance of the contract. Paragraph (c) requires the offeror to submit two prices for each deliverable item that contains precious metals: one based on the Government furnishing the precious metals, and the other based on the contractor furnishing the precious metals.
- 252.209–7001, Disclosure of Ownership or Control by the Government of a Terrorist Country. Paragraph (c) of this provision requires an offeror to provide a disclosure with its offer if the government of a terrorist country has a significant interest in the offeror, in a subsidiary of the offeror, or in a parent company of which the offeror is a subsidiary.
- 252.211–7004, Alternate Preservation, Packaging, and Packing. Paragraph (b) of this provision requires an offeror to submit information sufficient to allow evaluation of any alternate preservation, packaging, or packing proposed by the offeror.
- 252.226–7000, Notice of Historically Black College or University and Minority Institution Set-Aside. Paragraph (c)(2) of this clause requires that, upon request of the contracting officer, the offeror will provide evidence prior to award that the Secretary of Education has determined the offeror to be a historically black college or university or minority institution.
- 252.237–7000, Notice of Special Standards of Responsibility. Paragraph (c) of this provision requires the apparently successful offeror, under a solicitation for audit services, to give the contracting officer evidence that it is licensed by the cognizant licensing authority in the State or other political jurisdiction where the offeror operates its professional practice.

Michele P. Peterson,

Executive Editor, Defense Acquisition Regulations Council.

[FR Doc. 02–17522 Filed 7–11–02; 8:45 am]

BILLING CODE 5001–08–P

DEPARTMENT OF DEFENSE

GENERAL SERVICES ADMINISTRATION

NATIONAL AERONAUTICS AND SPACE ADMINISTRATION

[OMB Control No. 9000–0082]

Federal Acquisition Regulation; Submission for OMB Review; Economic Purchase Quantities—Supplies

AGENCIES: Department of Defense (DOD), General Services Administration (GSA), and National Aeronautics and Space Administration (NASA).

ACTION: Notice of request for public comments regarding an extension to an existing OMB clearance (9000–0082).

SUMMARY: Under the provisions of the Paperwork Reduction Act of 1995 (44 U.S.C. Chapter 35), the Federal Acquisition Regulation (FAR) Secretariat has submitted to the Office of Management and Budget (OMB) a request to review and approve an extension of a currently approved information collection requirement concerning economic purchase quantities—supplies. A request for public comments was published in the **Federal Register** at 67 FR 20745, on April 26, 2002. No comments were received.

Public comments are particularly invited on: Whether this collection of information is necessary for the proper performance of functions of the FAR,

and whether it will have practical utility; whether our estimate of the public burden of this collection of information is accurate, and based on valid assumptions and methodology; ways to enhance the quality, utility, and clarity of the information to be collected; and ways in which we can minimize the burden of the collection of information on those who are to respond, through the use of appropriate technological collection techniques or other forms of information technology.

DATES: Submit comments on or before August 12, 2002.

ADDRESSES: Submit comments regarding this burden estimate or any other aspect of this collection of information, including suggestions for reducing this burden to: FAR Desk Officer, OMB, Room 10102, NEOB, Washington, DC 20503, and a copy to the General Services Administration, FAR Secretariat (MVP), 1800 F Street, NW, Room 4035, Washington, DC 20405.

FOR FURTHER INFORMATION CONTACT: Jeremy F. Olson, Acquisition Policy Division, GSA (202) 501–3221.

SUPPLEMENTARY INFORMATION:

A. Purpose

The provision at 52.207–4, Economic Purchase Quantities—Supplies, invites offerors to state an opinion on whether the quantity of supplies on which bids, proposals, or quotes are requested in solicitations is economically advantageous to the Government. Each offeror who believes that acquisitions in different quantities would be more advantageous is invited to (1) recommend an economic purchase quantity, showing a recommended unit and total price, and (2) identify the different quantity points where significant price breaks occur. This information is required by Public Law 98–577 and Public Law 98–525.

B. Annual Reporting Burden

Respondents: 1,524.

Responses Per Respondent: 25.

Annual Responses: 38,100.

Hours Per Response: .83.

Total Burden Hours: 31,623.

Obtaining Copies of Proposals: Requesters may obtain a copy of the information collection documents from the General Services Administration, FAR Secretariat (MVP), Room 4035, 1800 F Street, NW, Washington, DC 20405, telephone (202) 501–4755. Please cite OMB Control No. 9000–0082, Economic Purchase Quantities—Supplies, in all correspondence.

Dated: July 8, 2002.

Linda K. Nelson,

Acting Director, Acquisition Policy Division.

[FR Doc. 02–17595 Filed 7–11–02; 8:45 am]

BILLING CODE 6820–EP–P

DEPARTMENT OF DEFENSE

GENERAL SERVICES ADMINISTRATION

NATIONAL AERONAUTICS AND SPACE ADMINISTRATION

[OMB Control No. 9000–0080]

Federal Acquisition Regulation; Submission for OMB Review; Integrity of Unit Prices

AGENCIES: Department of Defense (DOD), General Services Administration (GSA), and National Aeronautics and Space Administration (NASA).

ACTION: Notice of request for public comments regarding an extension to an existing OMB clearance (9000–0080).

SUMMARY: Under the provisions of the Paperwork Reduction Act of 1995 (44 U.S.C. chapter 35), the Federal Acquisition Regulation (FAR) Secretariat has submitted to the Office of Management and Budget (OMB) a request to review and approve an extension of a currently approved information collection requirement concerning integrity of unit prices. A request for public comments was published in the **Federal Register** at 67 FR 20744 on April 26, 2002. No comments were received.

Public comments are particularly invited on: Whether this collection of information is necessary for the proper performance of functions of the FAR, and whether it will have practical utility; whether our estimate of the public burden of this collection of information is accurate, and based on valid assumptions and methodology; ways to enhance the quality, utility, and clarity of the information to be collected; and ways in which we can minimize the burden of the collection of information on those who are to respond, through the use of appropriate technological collection techniques or other forms of information technology.

DATES: Submit comments on or before August 12, 2002.

ADDRESSES: Submit comments regarding this burden estimate or any other aspect of this collection of information, including suggestions for reducing this burden to: FAR Desk Officer, OMB, Room 10102, NEOB, Washington, DC 20503, and a copy to the General Services Administration, FAR Secretariat (MVP), 1800 F Street, NW, Room 4035, Washington, DC 20405.

FOR FURTHER INFORMATION CONTACT: Jeremy F. Olson, Federal Acquisition Policy Division, GSA (202) 501–3221.

SUPPLEMENTARY INFORMATION:

A. Purpose

FAR 15.408(f) and the clause at FAR 52.215–14, Integrity of Unit Prices, require offerors and contractors under Federal contracts that are to be awarded without adequate price competition to identify in their proposals those supplies which they will not manufacture or to which they will not contribute significant value. The policies included in the FAR are required by section 501 of Public Law 98–577 (for the civilian agencies) and section 927 of Public Law 99–500 (for DOD and NASA). The rule contains no reporting requirements on contracts with commercial items.

B. Annual Reporting Burden

Respondents: 1,000.

Responses Per Respondent: 10.

Annual Responses: 10,000.

Hours Per Response: 1 hour.

Total Burden Hours: 10,000.

Obtaining Copies of Proposals: Requesters may obtain a copy of the information collection documents from the General Services Administration, FAR Secretariat (MVP), Room 4035, 1800 F Street, NW., Washington, DC 20405, telephone (202) 501–4755. Please cite OMB Control No. 9000–0080, Integrity of Unit Prices, in all correspondence.

Dated: July 8, 2002.

Linda K. Nelson,

Acting Director, Acquisition Policy Division.

[FR Doc. 02–17596 Filed 7–11–02; 8:45 am]

BILLING CODE 6820–EP–P

DEPARTMENT OF DEFENSE

GENERAL SERVICES ADMINISTRATION

NATIONAL AERONAUTICS AND SPACE ADMINISTRATION

[OMB Control No. 9000–0144]

Federal Acquisition Regulation; Submission for OMB Review; Payment by Electronic Fund Transfer

AGENCIES: Department of Defense (DOD), General Services Administration (GSA), and National Aeronautics and Space Administration (NASA).

ACTION: Notice of request for public comments regarding an extension to an existing OMB clearance (9000–0144).

SUMMARY: Under the provisions of the Paperwork Reduction Act of 1995 (44 U.S.C. chapter 35), the Federal Acquisition Regulation (FAR) Secretariat has submitted to the Office of Management and Budget (OMB) a request to review and approve an extension of a currently approved information collection requirement concerning payment by electronic fund transfer. A request for public comments was published in the **Federal Register** at 67 FR 20744 on April 26, 2002. No comments were received.

DATES: Submit comments on or before August 12, 2002.

ADDRESSES: Submit comments regarding this burden estimate or any other aspect of this collection of information, including suggestions for reducing this burden should be submitted to the General Services Administration, FAR Secretariat, 1800 F Street, NW., Room 4035, Washington, DC 20405.

FOR FURTHER INFORMATION CONTACT: Jeremy F. Olson, Acquisition Policy Division, GSA (202) 501–3221.

SUPPLEMENTARY INFORMATION:

A. Purpose

The FAR requires certain information to be provided by contractors which would enable the Government to make payments under the contract by electronic fund transfer (EFT). The information necessary to make the EFT transaction is specified in clause 52.232–33, Payment by Electronic Fund Transfer-Central Contractor Registration, which the contractor is required to provide prior to award, and clause 52.232–34, Payment by Electronic Fund Transfer-Other Than Central Contractor Registration, which requires EFT information to be provided as specified by the agency to enable payment by EFT.

B. Annual Reporting Burden

Respondents: 14,000.
Responses Per Respondent: 10.
Annual Responses: 140,000.
Hours Per Response: .5.
Total Burden Hours: 70,000.
Obtaining Copies of Proposals: Requesters may obtain a copy of the information colllection documents from the General Services Administration, FAR Secretariat (MVP), Room 4035, 1800 F Street, NW., Washington, DC 20405, telephone (202) 501–4755. Please cite OMB Control No. 9000–0144, Payment by Electronic Fund Transfer, in all correspondence.

Dated: July 8, 2002.

Linda K. Nelson,

Acting Director, Acquisition Policy Division.

[FR Doc. 02–17597 Filed 7–11–02; 8:45 am]

BILLING CODE 6820–EP–P

DEPARTMENT OF DEFENSE

Treatment of Proprietary Data

AGENCY: Department of Defense (DoD).

ACTION: Notice of public meeting.

SUMMARY: The Director of Defense Procurement is sponsoring a public meeting to discuss the treatment of proprietary data during all phases of DoD procurements. A background paper to be discussed at the public meeting is available on the Defense Procurement Internet home page at *http://www.acq.osd.mil/dp/.* If necessary to ensure that all the views of the interested parties have been heard, subsequent public meetings may be held concerning this issue. The dates and times of any subsequent meetings will be published after the initial meeting, on the Defense Procurement Internet home page at *http://www.acq.osd.mil/dp/.*

DATES: The first meeting will be held on July 26, 2002, from 9 a.m. to 5 p.m, with an hour break for lunch at 12 p.m.

ADDRESSES: The meeting will be held in Room C–43, Crystal Mall, Building 4, 1941 Jefferson Davis Highway, Arlington, VA 22202.

FOR FURTHER INFORMATION CONTACT: Mr. William H. Anderson, Chair, Defense Acquisition Regulations Council Committee on Patents, Data, and Copyrights, by telephone at (703) 588–5090, by fax at (703) 588–8037, or by e-mail at *William.Anderson@pentagon.af.mil.*

Michele P. Peterson,

Executive Editor, Defense Acquisition Regulations Council.

[FR Doc. 02–17523 Filed 7–11–02; 8:45 am]

BILLING CODE 5001–08–P

DEPARTMENT OF EDUCATION

Submission for OMB Review; Comment Request

AGENCY: Department of Education.

SUMMARY: The Leader, Regulatory Information Management Group, Office of the Chief Information Officer invites comments on the submission for OMB review as required by the Paperwork Reduction Act of 1995.

DATES: Interested persons are invited to submit comments on or before August 12, 2002.

ADDRESSES: Written comments should be addressed to the Office of Information and Regulatory Affairs, Attention: Karen Lee, Desk Officer, Department of Education, Office of Management and Budget, 725 17th Street, NW., Room 10235, New Executive Office Building, Washington, DC 20503 or should be electronically mailed to the Internet address *Karen_F._Lee@omb.eop.gov.*

SUPPLEMENTARY INFORMATION: Section 3506 of the Paperwork Reduction Act of 1995 (44 U.S.C. Chapter 35) requires that the Office of Management and Budget (OMB) provide interested Federal agencies and the public an early opportunity to comment on information collection requests. OMB may amend or waive the requirement for public consultation to the extent that public participation in the approval process would defeat the purpose of the information collection, violate State or Federal law, or substantially interfere with any agency's ability to perform its statutory obligations. The Leader, Regulatory Information Management Group, Office of the Chief Information Officer, publishes that notice containing proposed information collection requests prior to submission of these requests to OMB. Each proposed information collection, grouped by office, contains the following: (1) Type of review requested, *e.g.* new, revision, extension, existing or reinstatement; (2) title; (3) summary of the collection; (4) description of the need for, and proposed use of, the information; (5) respondents and frequency of collection; and (6) reporting and/or recordkeeping burden. OMB invites public comment.

Dated: July 8, 2002.

John D. Tressler,

Leader, Regulatory Information Management, Office of the Chief Information Officer.

Office of Educational Research and Improvement

Type of Review: Revision.
Title: NCES Quick Response Information System.
Frequency: On Occasion.
Affected Public: State, Local, or Tribal Gov't, SEAs or LEAs; Not-for-profit institutions; Individuals or household; Businesses or other for-profit.
Reporting and Recordkeeping Hour Burden:
Responses: 10,518.
Burden Hours: 7,889.
Abstract: The Quick Response Information System (QRIS) is comprised

of two types of surveys, one oriented towards elementary and secondary school and library issues, the Fast Response Survey System (FRSS) and the second intended to address issues in postsecondary education, the Postsecondary Education Quick Information System (PEQIS). All the surveys conducted the QRIS are required to inform current policy issues for which there are no other timely and/or appropriate data available. In recent years, surveys have been conducted on topics as diverse as distance education in postsecondary education, services for students with disabilities in postsecondary education, advanced telecommunications in elementary and secondary schools, summer programs for migrant students, and teacher quality.

Requests for copies of the submission for OMB review; comment request may be accessed from *http://edicsweb.ed.gov,* by selecting the ''Browse Pending Collections'' link and by clicking on link number 2029. When you access the information collection, click on ''Download Attachments '' to view. Written requests for information should be addressed to Vivian Reese, Department of Education, 400 Maryland Avenue, SW., Room 4050, Regional Office Building 3, Washington, DC 20202–4651 or to the e-mail address *vivan.reese@ed.gov.* Requests may also be electronically mailed to the Internet address *OCIO_RIMG@ed.gov* or faxed to 202–708–9346. Please specify the complete title of the information collection when making your request.

Comments regarding burden and/or the collection activity requirements should be directed to Kathy Axt at her Internet address *Kathy.Axt@ed.gov.* Individuals who use a telecommunications device for the deaf (TDD) may call the Federal Information Relay Service (FIRS) at 1–800–877–8339.

[FR Doc. 02–17498 Filed 7–11–02; 8:45 am]

BILLING CODE 4000–01–P

DEPARTMENT OF EDUCATION

Submission for OMB Review; Comment Request

AGENCY: Department of Education.

SUMMARY: The Leader, Regulatory Information Management Group, Office of the Chief Information Officer invites comments on the submission for OMB review as required by the Paperwork Reduction Act of 1995.

DATES: Interested persons are invited to submit comments on or before August 12, 2002.

ADDRESSES: Written comments should be addressed to the Office of Information and Regulatory Affairs, Attention: Lauren Wittenberg, Desk Officer, Department of Education, Office of Management and Budget, 725 17th Street, NW., Room 10235, New Executive Office Building, Washington, DC 20503 or should be electronically mailed to the Internet address Lauren *Wittenberg@omb.eop.gov.*

SUPPLEMENTARY INFORMATION: Section 3506 of the Paperwork Reduction Act of 1995 (44 U.S.C. Chapter 35) requires that the Office of Management and Budget (OMB) provide interested Federal agencies and the public an early opportunity to comment on information collection requests. OMB may amend or waive the requirement for public consultation to the extent that public participation in the approval process would defeat the purpose of the information collection, violate State or Federal law, or substantially interfere with any agency's ability to perform its statutory obligations. The Leader, Regulatory Information Management Group, Office of the Chief Information Officer, publishes that notice containing proposed information collection requests prior to submission of these requests to OMB. Each proposed information collection, grouped by office, contains the following: (1) Type of review requested, *e.g.* new, revision, extension, existing or reinstatement; (2) title; (3) summary of the collection; (4) description of the need for, and proposed use of, the information; (5) respondents and frequency of collection; and (6) reporting and/or recordkeeping burden. OMB invites public comment.

Dated: July 8, 2002.

John D. Tressler,

Leader, Regulatory Information Management, Office of the Chief Information Officer.

Federal Student Aid

Type of Review: Revision.

Title: Federal Stafford Loan (Subsidized and Unsubsidized) Program Master Promissory Note.

Frequency: On Occasion; Annually.

Affected Public: Individuals or household; Businesses or other for-profit; Not-for-profit institutions.

Reporting and Recordkeeping Hour Burden:

Responses: 2,887,200.

Burden Hours: 2,165,400.

Abstract: This promissory note is the means by which a Federal Stafford Program Loan borrower promises to repay his or her loan.

Requests for copies of the submission for OMB review; comment request may be accessed from *http://edicsweb.ed.gov,* by selecting the ''Browse Pending Collections'' link and by clicking on link number 1735. When you access the information collection, click on ''Download Attachments '' to view. Written requests for information should be addressed to Vivian Reese, Department of Education, 400 Maryland Avenue, SW., Room 4050, Regional Office Building 3, Washington, DC 20202–4651 or to the e-mail address *vivan.reese@ed.gov.* Requests may also be electronically mailed to the Internet address *OCIO_RIMG@ed.gov* or faxed to 202–708–9346. Please specify the complete title of the information collection when making your request.

Comments regarding burden and/or the collection activity requirements should be directed to Joseph Schubart at (202) 708–9266 or via his Internet address *Joe.Schubart@ed.gov.* Individuals who use a telecommunications device for the deaf (TDD) may call the Federal Information Relay Service (FIRS) at 1–800–877–8339.

[FR Doc. 02–17499 Filed 7–11–02; 8:45 am]

BILLING CODE 4000–01–P

ENVIRONMENTAL PROTECTION AGENCY

[ER–FRL–6630–9]

Environmental Impact Statements; Notice of Availability

Responsible Agency: Office of Federal Activities, General Information (202) 564–7167 or *http://www.epa.gov/compliance/nepa/.*

Weekly receipt of Environmental Impact Statements

Filed July 01, 2002, through July 05, 2002

Pursuant to 40 CFR 1506.9.

EIS No. 020285, DRAFT SUPPLEMENT, FHW, CA, I–880/CA–92 Interchange Reconstruction, I–880 from Winton Avenue to Tennyson Road and CA–92 from Hesperian Boulevard to Santa Clara Street, Updated Information, Funding, City of Hayward, Alameda County, CA, Comment Period Ends: August 26, 2002, Contact: Maiser Khaled (916) 498–5020.

EIS No. 020286, DRAFT EIS, AFS, CA, Red Star Restoration Project, Removal of Fire-Killed Trees, Fuels Reduction, Road Reconstruction and Decommissioning, and Associated Restoration, Tahoe National Forest, Foresthill Ranger District, Placer County, CA, Comment Period Ends: August 26, 2002, Contact: Karen Jones (530) 478–6254. This document is

available on the Internet at: *http://www.r5.fs.fed.us/tahoe/*.

EIS No. 020287, FINAL SUPPLEMENT, FHW, HI, Honoapiilani Highway/FAP Route 30 Improvement, New Information Concerning Construction of Modifications to Honoapiilani Highway from Puamana to Honokowai, COE Permits and NPDES Permit Issuance and Funding, Lahaina District, Maui County, HI, Wait Period Ends: August 12, 2002, Contact: Domingo Galicinao (808) 541–2700.

EIS No. 020288, DRAFT EIS, FHW, CA, Willits Freeway Bypass Project, Construction and Operation of a New Segment of U.S. 101, COE Section 404 Permit, NPDES Permit and Endangered Species Act (Incidental Take Permit), City of Willits, Mendocino County, CA, Comment Period Ends: August 26, 2002, Contact: Maiser Khaled (916) 498–5020.

EIS No. 020289, FINAL EIS, RUS, AK, Southern Intertie Project, Constructing and Operating a new 138kV Transmission Line between the Kenai Peninsula and Anchorage, Right-of-Way Permit, Special-Use Permit, COE Section 10 and 404 Permit, Kenai Peninsula to Anchorage, AK, Wait Period Ends: August 12, 2002, Contact: Laurence R. Wolfe (202) 720–1784.

EIS No. 020290, DRAFT SUPPLEMENT, COE, OR, Columbia River Channel Improvement Project, Additional Information, To Update the Disposal Plan and to Update the Project Economics, Columbia and Lower Willamette River Federal Navigation Channel, OR, Comment Period Ends: September 03, 2002, Contact: Laura Hicks (503) 808–4705.

EIS No. 020291, DRAFT EIS, FTA, VA, Dulles Corridor Rapid Transit Project, To Provide High-Quality and High-Capacity Transit Service in Dulles Corridor, West Falls Church Metrorail Station in Fairfax County to the Vicinity of Route 772 in Loudoun County, VA, Comment Period Ends: August 28, 2002, Contact: John Dittmeier (703) 247–6500.

EIS No. 020292, FINAL EIS, FHW, TN, KY, Corridor 18/Interstate 69 Proposed Improvements from the U.S. 412/U.S. 51 Interchange to the U.S. 51 Fulton Bypass/Purchase Parkway Interchange, Dyer and Obion Counties, TN and Fulton County, KY, Wait Period Ends: August 12, 2002, Contact: Charles Boyd (615) 781–5770.

EIS No. 020293, FINAL EIS, FHW, MO, MO–19, MO–107 and U.S. 54 Improvements and Extension, U.S. 61 near Bowling Green and New London on the East to Mark Twain Lake and the Mexico Bypass on the West, Funding and COE Section 404 Permits Issuance, Pike, Monroe, Ralls and Audrain Counties, MO, Wait Period Ends: August 19, 2002, Contact: Don Newmann (573) 636–7104.

Amended Notices

EIS No. 020213, DRAFT EIS, FHW, PA, Mon/Fayette Transportation Project, Improvements from PA Route 51 to I–376 in Monroeville and Pittsburg, Funding, U.S. Coast Guard Bridge Permit and COE Section 404 Permit, Allegheny County, PA, Comment Period Ends: September 09, 2002, Contact: James A. Cheatham (717) 221–3461. Revision of FR Notice Published on 05/31/2002: Extending Comment Period From 08/14/2002 to 09/09/2002.

EIS No. 020231, DRAFT EIS, COE, TX, North Padre Island Storm Damage Reduction and Environmental Restoration Project, Construction of a Channel between the Laquna Madre and the Gulf of Mexico across North Padre Island referred to as Packery Channel Project, Nueces County, IL, Comment Period Ends: July 29, 2002, Contact: Sam J. Watson (409) 766–3946. Revision of FR Notice Published on 06/14/2002: Correction to Contact Person Phone Number.

EIS No. 020278, FINAL EIS, FHW, NY, NYS Route 17, Horseheads Project, Reconstruction from RM 17–6205–1069 to RM 14–6201–3040, Town and Village of Horseheads (P.I.N. 6239.00) Chemung County, NY, Wait Period Ends: August 05, 2002, Contact: Robert E. Arnold (518) 431–4127. Revision of FR Notice published on 07/05/2002: Correction to Document Status from Draft to Final.

EIS No. 020282, FINAL EIS, COE, NJ, Meadowlands Mills Project, Construction of a Mixed-Use Commercial Development, Permit Application Number 95–07–440-RS, US Army COE Section 10 and 404 Permit Issuance, Boroughs of Carlstadt and Monnachie, Township of South Hackensack, Bergen County, NJ, Wait Period Ends: August 19, 2002, Contact: Steven Schumach (212) 264–0183. Revision of FR notice published on 07/05/2002: Correction Comment Period from 8/5/2002 to 8/19/2002.

Dated: July 9, 2002.

Joseph C. Montgomery,

Director, NEPA, Office of Federal Activities.

[FR Doc. 02–17537 Filed 7–11–02; 8:45 am]

BILLING CODE 6560–50–P

ENVIRONMENTAL PROTECTION AGENCY

[ER–FRL–6631–1]

Environmental Impact Statements and Regulations; Availability of EPA Comments

Availability of EPA comments prepared pursuant to the Environmental Review Process (ERP), under section 309 of the Clean Air Act and section 102(2)(c) of the National Environmental Policy Act as amended. Requests for copies of EPA comments can be directed to the Office of Federal Activities at (202) 564–7167. An explanation of the ratings assigned to draft environmental impact statements (EISs) was published in FR dated April 12, 2002 (67 FR 17992).

Draft EISs

ERP No. D–AFS–J65360–CO Rating EC1, Lizard Head Road Easement, Application from Private Landowners Requesting a Permit to Cross Public Lands to Access Non-Federal Lands, San Juan National Forest, Dolores Ranger District, Dolores County, CO.

Summary: EPA expressed environmental concerns about the impacts of road construction in roadless areas and development impacts to wetlands. EPA suggests that the final EIS discuss how the potential impacts to these sensitive resources will be minimized and mitigated.

ERP No. D–BLM–K61155–CA Rating EC2, Imperial Sand Dunes Recreation Area, Revising and Updating the Recreation Area Management Plan and Amendment to the California Desert Conservation Area Plan, Imperial County, CA.

Summary: EPA expressed environmental concerns associated with air quality impacts, habitat degradation, habitat fragmentation, and wilderness trespass associated with OHV use; requested additional detail on thresholds and consequences associated with adaptive management; and recommended additional measures to promote energy conservation and pollution minimization.

ERP No. D–NPS–K61156–00 Rating EC2, Lake Mead National Recreation Area, Long-Term Management of Lake Mead and Mohave and Associated Shoreline and Development Area, Lake Management Plan, Clark County, NV and Mohave County, AZ.

Summary: EPA expressed environmental concerns due to projected adverse effects on water quality and aquatic resources. EPA provided comments on construction-related air emissions, pollution

prevention opportunities, and hazardous materials, asking that the Final EIS discuss these issues and identify mitigation measures.

Final EISs

ERP No. F–AFS–L65333–OR Five Rivers Watershed Landscape Management Project, Terrestrial and Aquatic Habitat Restoration, Special-Use-Permit Issuance, Siuslaw National Forest, Waldport Ranger District, Lincoln and Lane Counties, OR.

Summary: The final EIS adequately discloses the impacts and satisfactorily responds to most of EPA's comments on the draft EIS. Therefore, EPA has no objection to the action as proposed.

ERP No. F–AFS–L65398–ID Brush Boulder Project, Vegetation Management, Road Construction, Reconstruction and Decommissioning, North Fork Payette River, Boise National Forest, Cascade Ranger District, Valley County, ID.

Summary: No formal comment letter was sent to the preparing agency.

ERP No. F–BLM–J67030–UT EPA expressed environmental concerns with the implementation of long-term treatment controls and mitigation associated with impacts to water quality.

Summary: ERP No. F–FAA–F51048–IL South Suburban Airport, Proposed Site Approval and Land Acquisition for a Future Air Carrier Airport, Will and Kankakee Counties, IL.

Summary: EPA has no adverse comments on the Tier 1 FEIS. EPA encourages the FAA to conduct a thorough analysis and discussion of direct, as well as, cumulative impacts associated with the proposed project in any Tier 2 environmental documentation.

ERP No. F–FHW–D40311–00 US Route 15 Improvement Project, PA–6015, Section G–20 and G–22 Tioga County, Pennsylvania, PIN 6008.22.123 Steuben County, New York and US Route 15 between PA Route 287 and Presho, New York, Funding and US Army COE Section 404 Permit Tioga County, PA and Steuben County, NY.

Summary: EPA continues to express environmental concern about impacts to natural resources as a result of the disposal of fill material generated during construction. EPA and other resource agencies support the acquisition and reforestation of a 100-year floodplain along the Cowanesque River in order to offset any outstanding wetland impacts.

ERP No. F–FHW–F40391–MI M–24 Reconstruction Project, From One Mile North of the Oakland County Line to I–69, Funding, Lapeer County, MI.

Summary: EPA believes that issues raised at the DEIS stage have been adequately addressed. EPA concurs with the selected alternative and is satisfied with mitigation of wetland losses.

ERP No. F–FHW–F40396–IL US 67 (FAP–310) Expressway from Jacksonville to Macomb Transportation Improvements, Funding, US Army COE Section 10 and 404 and NPDES Permits Issuance, Morgan, Cass, Schuyler and McDonough Counties, IL.

Summary: EPA determined that the FEIS adequately addressed its concerns regarding the purpose and need of the project, the choice of alignment alternatives, and groundwater quality impacts. However, EPA remains concerned about the impacts of explosive demolition techniques on the quality of the Illinois River and the direct impacts to the Beardstown Marsh Natural Area. EPA recommends considering alternate alignments or providing funding for special management techniques on nearby sites.

ERP No. F–FHW–G40164–TX President George Bush Turnpike (PGBT) Segment IV, Improvement from I–35E to I–635, Funding and US Army COE Section 404 Permit Issuance, Dallas Dallas County, TX.

Summary: EPA has no further comments to offer. The Final EIS has responded to comments on the Draft EIS.

ERP No. F–TPT–K61154–CA Presidio Trust Implementation Plan (PTIP), An Updated Plan for the Area B of the Presidio of San Francisco, Implementation, San Francisco Bay Area, Marin County, CA.

Summary: The FEIS had adequately addressed EPA's issues raised in our DEIS comment letter.

Dated: July 9, 2002.

Joseph C. Montgomery,

Director, NEPA Compliance Division, Office of Federal Activities.

[FR Doc. 02–17538 Filed 7–11–02; 8:45 am]

BILLING CODE 6560–50–P

ENVIRONMENTAL PROTECTION AGENCY

[FRL–7245–2]

Availability of ''Supplemental Allocation of Fiscal Year 2002 Operator Training Grants for Wastewater Security''

AGENCY: Environmental Protection Agency (EPA).

ACTION: Notice of document availability.

SUMMARY: EPA is announcing availability of a memorandum entitled ''Supplemental Allocation of Fiscal Year 2002 Operator Training Grants'' issued on June 5, 2002. This memorandum provides National guidance for the allocation of funds used under section 104(g)(l) of the Clean Water Act.

ADDRESSES: Municipal Assistance Branch, U.S. EPA, 1200 Pennsylvania Avenue, NW. (4204–M), Washington, DC, 20460.

FOR FURTHER INFORMATION CONTACT: Curt Baranowski, (202) 564–0636 or *baranowski.curt@epa.gov.*

SUPPLEMENTARY INFORMATION: The subject memorandum may be viewed and downloaded from EPA's homepage, *http://www.epa.gov/owm/tomm.htm*, under ''*Supplemental Wastewater Security Grant Guidance*''.

Dated: June 21, 2002.

James A. Hanlon,

Director, Office of Wastewater Management.

[FR Doc. 02–17539 Filed 7–11–02; 8:45 am]

BILLING CODE 6560–50–P

ENVIRONMENTAL PROTECTION AGENCY

[FRL–7245–3]

Availability of ''Allocation of Fiscal Year 2002 Youth and the Environment Training and Employment Program Funds''

AGENCY: Environmental Protection Agency (EPA).

ACTION: Notice of document availability.

SUMMARY: EPA is announcing availability of a memorandum entitled ''Allocation of Fiscal Year 2002 Youth and the Environment Training and Employment Program Funds'' issued on May 28, 2002. This memorandum provides National guidance for the allocation of funds used under section 104(b)(3) of the Clean Water Act.

ADDRESSES: Municipal Assistance Branch (4204–M), U.S. EPA, 1200 Pennsylvania Avenue, NW., Washington, DC 20460.

FOR FURTHER INFORMATION CONTACT: Curt Baranowski, (202) 564–0636 or *baranowski.curt@epa.gov.*

SUPPLEMENTARY INFORMATION: The subject memorandum may be viewed and downloaded from Program's web page at *http://www.epa.gov/owm/youth.htm* under the *Grant Guidance* link.

Dated: June 7, 2002.

James A. Hanlon,

Director, Office of Wastewater Management.

[FR Doc. 02–17540 Filed 7–11–02; 8:45 am]

BILLING CODE 6560–50–P

FEDERAL COMMUNICATIONS COMMISSION

[MB Docket No. 02–145; FCC 02–178]

Annual Assessment of the Status of Competition in the Market for the Delivery of Video Programming

AGENCY: Federal Communications Commission.

ACTION: Notice.

SUMMARY: The Commission is required to report annually to Congress on the status of competition in markets for the delivery of video programming. This document solicits information from the public for use in preparing the competition report that is to be submitted to Congress in December 2002. The document will provide parties with an opportunity to submit comments and information to be used in conjunction with publicly available information and filings submitted in relevant Commission proceedings to assess the extent of competition in the market for the delivery of video programming.

DATES: Comments are due on or before July 29, 2002, and reply comments are due on or before August 30, 2002.

ADDRESSES: Federal Communications Commission, 445 12th Street, SW., Washington, DC 20554.

FOR FURTHER INFORMATION, CONTACT: Anne Levine, Media Bureau at (202) 418–7027 or via internet at *alevine@fcc.gov.*

SUPPLEMENTARY INFORMATION: This is a synopsis of the Commission's *Notice of Inquiry,* MB Docket 02–145, adopted June 13, 2002 and released June 14, 2002. The full text of this *Notice* is available for inspection and copying during normal business hours in the FCC Reference Information Center, Portals II, 445 12th Street, SW., Room CY–A257, Washington, DC 20554, and may be purchased from the Commission's copy contractor, Qualex International, Portals II, 445 12th Street, SW., Room CY–B402, Washington, DC 20554, telephone (202) 863–2893, facsimile (202) 863–2898, or via e-mail *qualexint@aol.com* or may be viewed via internet at *http://www.fcc.gov/mb/.*

Synopsis of the Notice of Inquiry

1. Section 628(g) of the Communications Act of 1934, as amended, directs the Commission to annually report to Congress on the status of competition in the market for the delivery of video programming. This *Notice of Inquiry* (''*Notice*'') solicits data and information on the status of competition in the market for the delivery of video programming for our ninth annual report (''2002 Report''). We seek to compare video distribution alternatives available to consumers, and to evaluate the extent to which consumers have choices among video programming distributors and delivery technologies and to properly define the economic market or markets where competition takes place. We expect to base our evaluation on differences in video programming offerings, prices for programming services and associated equipment, and other services offered (e.g., telephony, high-speed Internet access services). We seek information that will allow us to evaluate the status of competition in the video marketplace, prospects for new entrants to that market, and the effect on the cable television industry and on consumers. The Commission will report on the current state of competition and report on changes in the competitive environment since our 2001 Report was submitted to Congress.

2. The accuracy and the usefulness of the 2002 Report are directly related to the information we receive from commenters. To the extent feasible, we request data as of June 30, 2002, to facilitate our analysis of competitive trends over time. Comments submitted in this proceeding will be augmented with information from publicly available sources and other Commission proceedings.

Competition in the Market for the Delivery of Video Programming

3. Video distributors using both wired and wireless technologies serve the market for the delivery of video programming. Video programming distributors include cable systems, direct broadcast satellite (''DBS'') providers, home satellite dish (''HSD'') providers, private cable or satellite master antenna television (''SMATV'') systems, open video systems (''OVS''), multichannel multipoint distribution services (''MMDS''), broadband service providers (''BSPs''), and over-the-air broadcast television stations.

4. We ask commenters to provide information on the most significant changes or developments in the past year. Specifically, we seek information regarding each of the video programming distributors, including the number of homes passed, the number of subscribers, the services offered, the cost for various service options, financial information on each industry, ownership information, and data on investments in plant and facility upgrades.

5. We seek information on industry and market structure and the effect of existing Commission regulations and other provisions of the law on competition in the video marketplace. To what extent do consumers have access to more than one video programming distributor? To what extent have customers switched from one provider or technology to another, and what factors are responsible for the switch? Where does head-to-head competition exist between cable and other video programming distributors, or among various types of video programming distributors? How has such competition affected prices, service offerings, and quality of service? We seek information on existing and planned overbuilding activity.

6. We request comment on any factors that are unique to competition in the multiple dwelling units (''MDUs'') submarket. We request information for new case studies and updates on previous case studies on the effects of actual and potential competition in local markets where consumers have a choice among video programming distributors. We also seek information on what barriers to entry exist in the market?

7. We ask commenters to provide data on national and local programming services, and their ownership. We seek information on the extent to which programmers are affiliated with video programming distributors and to what extent programming distributors, both broadcast and non-broadcast programming services, are involved in the production of the programming they provide, vertically integrated or not. Further, we request data on programming services including the scope of service, launch date, identification of ownership, and number of subscribers. To what extent are video programming distributors able to acquire or license unaffiliated programming? Are there certain programming services or types of services without which competitive video service providers may find themselves unable to compete effectively. We also seek information on how video programming distributors package their programming. In addition, we seek information on the ability of programmers to sell programming.

8. Further, we request comment regarding public, educational, and governmental (''PEG'') access and leased access channels and the number of channels being used for each of these purposes. We also seek information on the use of leased access channels, either on a part time or full time basis. We request comment on the effectiveness of our program access, program carriage, and channel occupancy rules. We seek

information regarding video programming providers' experiences offering closed captioning and video description.

9. We also ask for information on advanced service offerings (e.g., high-speed Internet access services, telephony, video-on-demand, high definition television, interactive television) and new ways of offering service (e.g., personal video recorders, streaming video) that are being deployed by video programming distributors. Specifically, we request information regarding the amount and type of programming being offered in high-definition television (''HDTV'') format. We seek updated statistics such as the cost of such services, the subscribership to these services, and the number of homes to which each type of service is available. Further, we seek information on the impact that the availability of non-video services offered by video programming providers has on the nature of competition in the video marketplace. We request comment on the development and deployment of ITV services. We request information on the extent to which video programming distributors offer or plan to offer EPGs. To what extent are national distributors of EPGs affiliated with video programming distributors? To what extent are EPGs that are affiliated with a video programming distributor available to competitors? We seek comment on the availability and compatibility of customer premises equipment used to provide video programming and other services. How many households have one or more devices? We seek information on the retail availability of navigation devices to consumers.

Cable Television

10. We plan to report on the performance of the cable television industry, and request data and comments on the current state of competition in this segment of the market. We seek statistical information on the cable industry generally and specifically the financial performance of the industry, capital acquisition and disposition, rates, channel capacity, programming costs, homes passed, subscribership, viewership, new service offerings, and the investments that cable operators have made to upgrade their plant and equipment.

11. We request information on the deployment of various technical methods to increase capacity. For individual MSOs, we request data on the number of systems upgraded, the analog channel capacity resulting from upgrades, the digital channel capacity resulting from upgrades, the number of systems with digital tiers, the number of households where digital services are available, and the number of subscribers to digital services. What types of programming are available on digital tiers?

12. We seek information on cable system transactions, including the names of the buyer and seller, the date of the transaction, type of transaction (i.e., sale, swap, or trade), name and location of the system, homes passed and number of subscribers, and the price. We seek similar information for non-cable video programming providers. We also request comment on the practice of clustering, whereby operators concentrate their operations in specific geographic areas. We request data regarding the effect of clustering by cable operators on competition in the video programming distribution market.

13. We seek comment on whether cable operators are changing the way they package programming. We also are interested in information on whether, and if so how, cable operators are restructuring their programming packages and tiers of service as a result of actual or potential competition.

14. We further request information about the availability of advanced services such as digital video, high-speed Internet access services, telephony, video-on-demand, and the amount and type of programming being offered in HDTV format. To what extent are consumers now purchasing cable modem equipment certified by CableLabs under their Certified Cable Modem Project, rather than renting from video programming distributors? We also seek the most recent information regarding the development of specifications for interoperable set-top boxes on Cable Television Laboratories, Inc.'s OpenCable process. What percentage of existing equipment is compatible with the OpenCable standards? What developments have taken place in the last year relating to the POD-Host Interface, or PHI license, that affect the deployment of navigation devices or their availability at retail stores? Finally, we solicit updated information on PacketCable, a CableLabs project intended to develop interoperable interface specifications for delivering advanced, real-time multimedia services over two-way cable plant. What is the status of the testing and implementation of this standard?

15. We seek information on cable operators that currently provide or plan to provide server-based offerings. Under these systems, the programming services reside at a central location and are accessible on demand. What types of services are offered in this manner? What are the regulatory implications of server-based services? What effect does server-provided video have on a programmer's ability to launch a new service?

16. Section 612(g) of the Communications Act provides that at such time as cable systems with 36 or more activated channels are available to 70 percent of households within the United States and are subscribed to by 70 percent of those households, the Commission may promulgate any additional rules necessary to promote diversity of information sources. Previously, we reported that the benchmark had not been met. Have there been any developments in the last year that would suggest that the criteria specified under Section 612(g) have been met? Under sections 614 and 615 of the Communications Act, cable operators must set aside up to one third of their channel capacity for the carriage of commercial television stations and additional channels for noncommercial stations depending on the system's channel capacity. We seek information on the extent to which cable operators currently are using all their required set-aside channels for the carriage of local broadcast signals. Further, we seek information on the number of cable systems not subject to effective competition that lack addressable converters or have other technological limitations that prevent access to programming on a per channel or per program basis without subscription to tiers other than the basic tiers. Are there cable systems that will not meet the October 2002 deadline for the capability to allow ''buy-through''?

Direct-to-Home Satellite Services

17. We seek updated information about direct-to-home (''DTH'') satellite services, which includes direct broadcast satellite (''DBS'') and home satellite dish (''HSD'' or ''C-Band'') services. We ask for information on subscribership on DBS and HSD services. Are there identifiable differences between consumers who choose to subscribe to DBS rather than cable or another video programming distributor? How many or what percentage of households cannot receive DBS service because they are not within the line-of-sight of the satellite signal? We seek comment on the geographic locations of DBS and HSD subscribers, by state and type of area (i.e., urban, suburban, rural). To what extent do DBS subscribers reside in areas not passed by cable systems?

18. We request information on the number of markets where local-into-

local television service is offered, or will be offered in the near future, pursuant to *Satellite Home Viewer Improvement Act of 1999* (''SHVIA''), including the number and affiliation of the stations carried. What percentage of DBS subscribers are opting for local programming packages where available? In cases in which additional equipment is needed to receive a full complement of local signals, what percentage of subscribers are obtaining this additional equipment? We also request information on the impact on DBS subscribership and penetration as well as its effect on the video programming market generally. What percentage of DBS subscribers continues to subscribe to cable in order to receive local broadcast signals?

19. We request data that will allow us to compare DBS and cable rates for programming packages and equipment. What is the typical cost of DBS equipment and installation? We request information regarding DBS operator equipment leasing program options, including the monthly rates charged for leasing equipment. To what extent do satellite operators subsidize equipment costs in order to attract subscribers? Have DBS rates for some programming packages increased over the last year? What factors affect changes in DBS prices?

20. We seek information on the status of Internet access services offered by the DBS industry. We seek information regarding other advanced services offered or co-marketed by DBS operators. To what extent are DBS operators offering programming in HDTV format? What marketing arrangements have non-DBS video programming distributors entered into to provide DBS service to their customers?

Broadcast Television

21. We seek information on the role of broadcast television in the market for the delivery of video programming. We request information on the number and percentage of MVPD subscribers who rely on off-air reception for local broadcast service on one or more television sets, by type of MVPD service. In addition, what percentage of households have only over-the-air broadcast television reception on all television sets?

22. We request information regarding the amount and type of programming (e.g., network, local, syndicated) being broadcast on digital channels, including the extent to which DTV channels are being used for HDTV, the extent to which they are being used for multichannel program offerings (''multicasting''), and the extent to which they are being planned as ancillary and supplementary services such as subscription services. We also seek information on DTV carriage agreements between broadcasters and cable operators and the status of any such negotiations. In addition, we request information on the sales of DTV consumer equipment and the factors affecting consumer adoption of DTV equipment.

Wireless Cable

23. We seek information regarding the previously identified trend towards declining subscribership for MMDS-provided video. We request fact-based projections and forecasts on the future of video programming distribution via MMDS technology. What factors affect the health and viability of the MMDS industry? We seek information about the availability of advanced services such as digital video, high-speed Internet access services, and telephony. What is the current availability of two-way services such as high-speed Internet access and telephony by MMDS operators?

Satellite Master Antenna Systems

24. SMATV systems, also known as private cable operators or private communication operators, are video distribution facilities that use closed transmission paths without using any public right-of-way. We request data for SMATV systems, including subscribership levels, service areas, and the identities of the largest operators. We also request information on the types of services offered by SMATV providers and the price charged for those services. How do the programming packages offered and the price of SMATV service compare to those of incumbent cable operators? Are there services that SMATV operators provide their subscribers that cable, DBS, and other technologies do not? Finally, what factors affect the health and viability of the SMATV industry?

Open Video Systems

25. We request information on the operation of open video systems, including the number of homes passed, the number of subscribers, and the types of services being offered by OVS operators. How are video services provided by OVS operators packaged and what is the typical cost for monthly service? To what extent are open video systems joint ventures between video service providers and other entities and what are the arrangements among the participants in such ventures? Are unaffiliated programmers seeking carriage on open video systems? How many programmers and what type of programming is being offered on this basis? To what extent are OVS operators offering voice and data services? How are such service offerings packaged and at what price to consumers? What effect has the *City of Dallas, Texas* v. *FCC* decision had on the growth of OVS? Are OVS operators combining such systems with franchised cable operations to serve specific geographic regions?

Local Exchange Carriers and Utilities

26. We seek information regarding LECs, long distance telephone companies, and utility companies that provide video services. We request information on franchised cable systems operated by LECs, both within their telephone service areas and outside those regions. To what extent are LEC video programming services being bundled with telephone, Internet, or other utility services?

Broadband Service Providers

27. We seek current information regarding the provision of video, voice, and data services by broadband service providers (''BSPs''). We request data on the geographic locations of such systems, whether they operate as franchised cable systems, the number of homes passed, and the number of subscribers they serve. We ask commenters to provide information regarding the video service packages that are offered and the rates charged for the various packages. Are video services offered in combination with advanced services? We further seek comment on the current and potential effect of BSPs on the status of video competition. What are the technical and economic obstacles to the successful operation of systems of this type? Are there issues involving pole attachments, access to programming, competitors' rates, broadcast signal retransmission consent, equipment availability, access to MDU inside wiring, or local municipal regulation that affect the viability of BSPs as competitors in the market for the delivery of video programming?

Home Video Sales and Rentals

28. We seek information regarding the home video sales and rental market. We request data on the number or percentage of households with videocassette recorders, laser disc players, DVD players, and PVRs. We request information on the amount of programming available in VCR, DVD, and laser disc formats for sale and rental. How does the cost of renting a video or DVD movie compare to the cost of a pay-per-view, video-on-demand, or near video-on-demand movie from a

video programming distributor? We seek information on the development of the Internet as a means through which some video retailers are selling their videos. Further, we seek information on the development of companies offering PVR services in conjunction with video programming distributors, equipment manufacturers, advertisers, and programmers.

Internet Video

29. Finally, we seek information on the types of video services currently being offered over the Internet and fact-based projections of when Internet video will become a viable competitor in the market for the delivery of video programming. We also solicit information on the technological, legal, and competitive factors that may promote or impede the provision of video over the Internet.

Procedural Matters

Ex Parte

30. There are no ex parte or disclosure requirements applicable to this proceeding pursuant to 47 CFR 1.1204(b)(1).

Filing of Comments and Reply Comments

31. Pursuant to §§ 1.415 and 1.419 of the Commission's rules, 47 CFR 1.415, 1.419, interested parties may file comments on or before July 29, 2002, and reply comments on or before August 30, 2002. Comments may be filed using the Commission's Electronic Comment Filing System (ECFS) or by filing paper copies. *See Electronic Filing of Documents in Rulemaking Proceedings*, 63 FR 24121 (1998).

32. Comments filed through the ECFS can be sent as an electronic file via the Internet to <*http://www.fcc.gov/e-file/ecfs.html*>. Generally, only one copy of an electronic submission must be filed. If multiple docket or rulemaking numbers appear in the caption of this proceeding, however, commenters must transmit one electronic copy of the comments to each docket or rulemaking number referenced in the caption. In completing the transmittal screen, commenters should include their full name, U.S. Postal Service mailing address, and the applicable docket or rulemaking number. Parties may also submit an electronic comment by Internet e-mail. To get filing instructions for e-mail comments, commenters should send an e-mail to *ecfs@fcc.gov*, and should include the following words in the body of the message, ''get form <your e-mail address>.'' A sample form and directions will be sent in reply.

33. Parties who choose to file by paper must file an original and four copies of each filing. If more than one docket or rulemaking number appear in the caption of this proceeding, commenters must submit two additional copies for each additional docket or rulemaking number. Filings can be sent by hand or messenger delivery, by commercial overnight courier, or by first-class or overnight U.S. Postal Service mail (although we continue to experience delays in receiving U.S. Postal Service mail). The Commission's contractor, Vistronix, Inc., will receive hand-delivered or messenger-delivered paper filings for the Commission's Secretary at 236 Massachusetts Avenue, NE., Suite 110, Washington, DC 20002. The filing hours at this location are 8 a.m. to 7 p.m. All hand deliveries must be held together with rubber bands or fasteners. Any envelopes must be disposed of before entering the building. Commercial overnight mail (other than U.S. Postal Service Express Mail and Priority Mail) must be sent to 9300 East Hampton Drive, Capitol Heights, MD 20743. U.S. Postal Service first-class mail, Express Mail, and Priority Mail should be addressed to 445 12th Street, SW., Washington, DC 20554. All filings must be addressed to the Commission's Secretary, Marlene H. Dortch, Office of the Secretary, Federal Communications 445 12th Street, SW., Room TW–A325, Washington, DC 20554. The Media Bureau contact for this proceeding is Anne Levine at (202) 418–7027, or at *alevine@fcc.gov*.

Ordering Clause

34. This Notice is issued pursuant to authority contained in sections 4(i), 4(j), 403, and 628(g) of the Communications Act of 1934, as amended.

Federal Communications Commission.

Marlene H. Dortch,

Secretary.

[FR Doc. 02–17516 Filed 7–11–02; 8:45 am]

BILLING CODE 6712–01–P

FEDERAL EMERGENCY MANAGEMENT AGENCY

Agency Information Collection Activities: Proposed Collection; Comment Request

ACTION: Notice and request for comments.

SUMMARY: The Federal Emergency Management Agency, as part of its continuing effort to reduce paperwork and respondent burden, invites the general public and other Federal agencies to take this opportunity to comment on proposed revised information collections. In accordance with the Paperwork Reduction Act of 1995 (44 U.S.C. 3506(c)(2)(A)), this notice seeks comments concerning the Elevation Certificate and the Floodproofing Certificate. The Elevation certificate is required by the NFIP to certify the elevations of the buildings so the policy can be properly rated. It also provides documentation to verify the community's enforcement of building ordinances, which is important to the NFIP mitigation and floodplain management activities.

ADDRESSES: Interested persons should submit written comments to Muriel B. Anderson, Chief, Records Management Section, Program Services and Systems Branch, Facilities Management and Services Division, Administration and Resource Planning Directorate, Federal Emergency Management Agency, 500 C Street, SW., Room 316, Washington, DC 20472.

FOR FURTHER INFORMATION CONTACT: Contact Jhun de la Cruz, Insurance Examiner, Federal Insurance and Mitigation Administration, (202) 646–2650 for additional information. You may contact Ms. Anderson for copies of the proposed collection of information at telephone number (202) 646–2625 or facsimile number (202) 646–3347 or e-mail *muriel.anderson@fema.gov.*

SUPPLEMENTARY INFORMATION: The National Flood Insurance Program (NFIP) regulations require the elevation or floodproofing of newly constructed structures in designated special flood hazard areas. As part of the agreement for making flood insurance available in a community, the NFIP requires the community to adopt a floodplain management ordinance containing certain minimum requirements intended to reduce future flood losses. One such requirement is that the community require that residential buildings be elevated to above the base flood elevation and, to enforce this requirement, obtain the elevation of the lowest floor (including basement) of all new and substantially improved structures, and maintain a record of all such information. These data should be generated and retained as part of the community's permit issuance and building inspection processes. The Elevation Certificate is one convenient way for a community to comply with this requirement; however, it is not prescribed. The Floodproofing Certificate may similarly be used to establish the required record in those instances when floodproofing for non-residential structures is a permitted practice.

The Elevation Certificate/ Floodproofing Certificate is an adjunct to the application for flood insurance and is required for proper rating of Post-FIRM structures, which are buildings constructed after publication of the Flood Insurance Rate Map (FIRM), for flood insurance in Special Flood Hazard Areas (44 CFR 61.7,61.8). In addition, the Elevation Certificate is needed for Pre-FIRM structures being rated under Post-FIRM flood insurance rules. The standardized format of the Elevation

Certificate and Floodproofing Certificate for Non-Residential Structures (FEMA Forms 81–31 and 81–65) provide the community officials and others documents, which may be used to readily record needed information.

Collection of Information

Title: Post Construction Elevation Certificate/FloodProofing Certificate.

Type of Information Collection: Revision of a currently approved collection.

OMB Number: 3067–0077.

Form Numbers: FEMA Form 81–31, Elevation Certificate, and FEMA Form 81–65, Flood Proofing Certificate.

Abstract: The Elevation Certificate and Floodproofing Certificate are adjuncts to the application for flood insurance. The certificates are required for proper rating of post Flood Insurance Rate Map (FIRM) structures, which are buildings constructed after publication of the FIRM, for flood insurance in Special Flood Hazard Areas. In addition, the Elevation Certificate is needed for pre-FIRM structures being rated under post-FIRM flood insurance rules. The certificates provide community officials and others standardized documents to readily record needed information.

The certificates are supplied to insurance agents, community officials, surveyors, engineers, architects, and NFIP policyholders/applicants. The community officials or other professionals provided the elevation data required to document conformance with floodplain management regulations and for the applicants so that actuarial insurance rates can be charged for insuring property against the flood hazard.

Affected Public: Individuals or Households, Business or Other For-Profit, Not-For-Profit Institutions, Farms, and State, Local or Tribal Governments.

ESTIMATED TOTAL ANNUAL BURDEN (C) HOURS

FEMA forms	Number of respondents (A)	Frequency of response (B)	Hours per response	Annual burden hours (A × B × C)
81–31	54,515	1	3	63,545
81–65	180	1	3.25	910
Total	54,695			164,455

Estimated Cost: The estimated annual cost to the respondents is approximately $12,306,375 (54,695 × $225 (average cost)). This estimated cost is based on a fee of $150$300 charged to the applicant by the private sector professional completing the Elevation or Floodprooofing certificates. The estimated annual cost to the Federal government to process, analyze and maintain this information is approximately $77,485.

Comments: Written comments are solicited to (a) evaluate whether the proposed data collection is necessary for the proper performance of the agency, including whether the information shall have practical utility; (b) evaluate the accuracy of the agency's estimate of the burden of the proposed collection of information, including the validity of the methodology and assumptions used; (c) enhance the quality, utility, and clarity of the information to be collected; and (d) minimize the burden of the collection of information on those who are to respond, including through the use of appropriate automated, electronic, mechanical, or other technological collection techniques or other forms of information technology, e.g., permitting electronic submission of responses. Comments should be received within 60 days of the date of this notice.

Dated: July 3, 2002.

Reginald Trujillo,

Branch Chief, Program Services and Systems Branch, Facilities Management and Services Division, Administration and Resource Planning Directorate.

[FR Doc. 02–17555 Filed 7–11–02; 8:45 am]

BILLING CODE 6718–01–P

FEDERAL EMERGENCY MANAGEMENT AGENCY

[FEMA–1422–DR]

Arizona; Amendment No. 1 to Notice of a Major Disaster Declaration

AGENCY: Federal Emergency Management Agency (FEMA).

ACTION: Notice.

SUMMARY: This notice amends the notice of a major disaster declaration for the State of Arizona (FEMA–1422–DR), dated June 25, 2002, and related determinations.

EFFECTIVE DATE: July 2, 2002.

FOR FURTHER INFORMATION CONTACT: Rich Robuck, Readiness, Response and Recovery and Directorate, Federal Emergency Management Agency, Washington, DC 20472, (202) 646–2705 or *Rich.Robuck@fema.gov.*

SUPPLEMENTARY INFORMATION: The notice of a major disaster declaration for the State of Arizona is hereby amended to include the following areas among those areas determined to have been adversely affected by the catastrophe declared a major disaster by the President in his declaration of June 25, 2002:

Coconino and Gila Counties for Individual Assistance.

(The following Catalog of Federal Domestic Assistance Numbers (CFDA) are to be used for reporting and drawing funds: 83.537, Community Disaster Loans; 83.538, Cora Brown Fund Program; 83.539, Crisis Counseling; 83.540, Disaster Legal Services Program; 83.541, Disaster Unemployment Assistance (DUA); 83.542, Fire Suppression Assistance; 83.543, Individual and Family Grant (IFG) Program; 83.544, Public Assistance Grants; 83.545, Disaster Housing Program; 83.548, Hazard Mitigation Grant Program.)

Joe M. Allbaugh,

Director.

[FR Doc. 02–17552 Filed 7–11–02; 8:45 am]

BILLING CODE 6718–02–P

FEDERAL EMERGENCY MANAGEMENT AGENCY

[FEMA–1425–DR]

Texas; Amendment No. 1 to Notice of a Major Disaster Declaration

AGENCY: Federal Emergency Management Agency (FEMA).

ACTION: Notice.

SUMMARY: This notice amends the notice of a major disaster declaration for the State of Texas, (FEMA–1425–DR), dated July 4, 2002, and related determinations.

EFFECTIVE DATE: July 4, 2002.

FOR FURTHER INFORMATION CONTACT: Rich Robuck, Readiness, Response and Recovery and Directorate, Federal Emergency Management Agency, Washington, DC 20472, (202) 646–2705 or *Rich.Robuck@fema.gov.*

SUPPLEMENTARY INFORMATION: The notice of a major disaster declaration for the State of Texas is hereby amended to include Public Assistance, limited to Category A (debris removal), and Category B (emergency protective measures), including direct Federal assistance for the following areas among those areas determined to have been adversely affected by the catastrophe declared a major disaster by the President in his declaration of July 4, 2002:

Bexar, Blanco, Comal, Hays, Kerr and Medina Counties for Public Assistance, limited to Category A (debris removal) and Category B (emergency protective measures), including direct Federal assistance (already designated for Individual Assistance).

Bandera, Gillespie, Kendall and Uvalde Counties for Individual Assistance and Public Assistance, limited to Category A (debris removal) and Category B (emergency protective measures), including direct Federal assistance.

(The following Catalog of Federal Domestic Assistance Numbers (CFDA) are to be used for reporting and drawing funds: 83.537, Community Disaster Loans; 83.538, Cora Brown Fund Program; 83.539, Crisis Counseling; 83.540, Disaster Legal Services Program; 83.541, Disaster Unemployment Assistance (DUA); 83.542, Fire Suppression Assistance; 83.543, Individual and Family Grant (IFG) Program; 83.544, Public Assistance Grants; 83.545, Disaster Housing Program; 83.548, Hazard Mitigation Grant Program.)

Joe M. Allbaugh,

Director.

[FR Doc. 02–17553 Filed 7–11–02; 8:45 am]

BILLING CODE 6718–02–P

FEDERAL EMERGENCY MANAGEMENT AGENCY

[FEMA–1425–DR]

Texas; Major Disaster and Related Determinations

AGENCY: Federal Emergency Management Agency (FEMA).

ACTION: Notice.

SUMMARY: This is a notice of the Presidential declaration of a major disaster for the State of Texas (FEMA–1425–DR), dated July 4, 2002, and related determinations.

EFFECTIVE DATE: July 4, 2002.

FOR FURTHER INFORMATION CONTACT: Rich Robuck, Readiness, Response and Recovery Directorate, Federal Emergency Management Agency, Washington, DC 20472, (202) 646–2705 or *Rich.Robuck@fema.gov.*

SUPPLEMENTARY INFORMATION: Notice is hereby given that, in a letter dated July 4, 2002, the President declared a major disaster under the authority of the Robert T. Stafford Disaster Relief and Emergency Assistance Act, 42 U.S.C. 5121–5206 (Stafford Act), as follows:

I have determined that the damage in certain areas of the State of Texas, resulting from severe storms and flooding beginning on June 29, 2002, and continuing, is of sufficient severity and magnitude to warrant a major disaster declaration under the Robert T. Stafford Disaster Relief and Emergency Assistance Act, 42 U.S.C. 5121–5206 (Stafford Act). I, therefore, declare that such a major disaster exists in the State of Texas

In order to provide Federal assistance, you are hereby authorized to allocate from funds available for these purposes, such amounts as you find necessary for Federal disaster assistance and administrative expenses.

You are authorized to provide Individual Assistance in the designated areas, Hazard Mitigation throughout the State and any other forms of assistance under the Stafford Act you may deem appropriate. Consistent with the requirement that Federal assistance be supplemental, any Federal funds provided under the Stafford Act for Hazard Mitigation and the Individual and Family Grant program will be limited to 75 percent of the total eligible costs. If Public Assistance is later warranted, Federal funds provided under that program will also be limited to 75 percent of the total eligible costs.

Further, you are authorized to make changes to this declaration to the extent allowable under the Stafford Act.

The time period prescribed for the implementation of section 310(a), Priority to Certain Applications for Public Facility and Public Housing Assistance, 42 U.S.C. 5153, shall be for a period not to exceed six months after the date of this declaration.

Notice is hereby given that pursuant to the authority vested in the Director of the Federal Emergency Management Agency under Executive Order 12148, I hereby appoint Sandra L. Coachman of the Federal Emergency Management Agency to act as the Federal Coordinating Officer for this declared disaster.

I do hereby determine the following areas of the State of Texas to have been affected adversely by this declared major disaster:

Bexar, Blanco, Comal, Hays, Kerr and Medina Counties for Individual Assistance.

All counties within the State of Texas are eligible to apply for assistance under the Hazard Mitigation Grant Program.

(The following Catalog of Federal Domestic Assistance Numbers (CFDA) are to be used for reporting and drawing funds: 83.537, Community Disaster Loans; 83.538, Cora Brown Fund Program; 83.539, Crisis Counseling; 83.540, Disaster Legal Services Program; 83.541, Disaster Unemployment Assistance (DUA); 83.542, Fire Suppression Assistance; 83.543, Individual and Family Grant (IFG) Program; 83.544, Public Assistance Grants; 83.545, Disaster Housing Program; 83.548, Hazard Mitigation Grant Program.)

Joe M. Allbaugh,

Director.

[FR Doc. 02–17554 Filed 7–11–02; 8:45 am]

BILLING CODE 6718–02–P

FEDERAL RESERVE SYSTEM

Federal Open Market Committee; Domestic Policy Directive of May 7, 2002

In accordance with § 271.25 of its rules regarding availability of information (12 CFR part 271), there is set forth below the domestic policy directive issued by the Federal Open Market Committee at its meeting held on May 7, 2002.[1]

The Federal Open Market Committee seeks monetary and financial conditions that will foster price stability and promote sustainable growth in output. To further its long-run objectives, the Committee in the immediate future seeks conditions in reserve markets consistent with maintaining the federal funds rate at an average of around 1¾ percent.

By order of the Federal Open Market Committee, July 3, 2002.

Donald L. Kohn,

Secretary, Federal Open Market Committee.

[FR Doc. 02–17512 Field 7–11–02; 8:45 am]

BILLING CODE 6210–01–S

[1] Copies of the Minutes of the Federal Open Market Committee meeting on May 7, 2002, which includes the domestic policy directive issued at the meeting, are available upon request to the Board of Governors of the Federal Reserve System, Washington, D.C. 20551. The minutes are published in the Federal Reserve Bulletin and in the Board's annual report.

GENERAL SERVICES ADMINISTRATION

Office of Management Services; Cancellation of an Optional Form by the Department of State

AGENCY: Office of Management Services, GSA.

ACTION: Notice.

SUMMARY: The Department of State cancelled the following Optional Form: OF 230, Part 1, Application for Immigrant Visa and Alien Registration.

This form is now a State Department form (DS Form 2083 Part I). You can request copies of the new form from: Department of State, A/RPS/DIR, SA–22, 18th and G Streets, NW; Suite 2400, Washington, DC 20522–2201, 202.312.9605.

DATES: Effective July 12, 2002.

FOR FURTHER INFORMATION CONTACT: Mr. Charles Cunningham, Department of State, 202.312.9605.

Dated: July 2, 2002.

Barbara M. Williams,

Deputy Standard and Optional Forms Management Officer, General Services Administration.

[FR Doc. 02–17496 Filed 7–11–02; 8:45 am]

BILLING CODE 6820–34–M

GENERAL SERVICES ADMINISTRATION

Notice of Intent; Environmental Assessment: San Diego County, CA

AGENCY: General Services Administration (GSA).

ACTION: Notice of intent.

SUMMARY: The GSA is issuing this notice to advise the public that an Environmental Assessment will be prepared for a proposed construction project in San Diego County, California.

FOR FURTHER INFORMATION CONTACT: Mr. Kevin Waldron (9PC), United States General Services Administration, Public buildings Service, 450 Golden Gate Avenue Third Floor, San Francisco, Ca 94102, Phone (415) 522–3275 Fax (415) 522–3316.

SUPPLEMENTARY INFORMATION: The GSA, in conjunction with the Immigration and Naturalization Service (INS), will prepare an Environmental Assessment (EA) to evaluate the environmental impacts of construction of a Border Patrol Station/Administration Building for the United States Immigration and Naturalization Service (INS). Potential resources areas of concern within the project area include endangered species, cultural resources, and traffic.

The purpose of the project is to provide expanded office and vehicle maintenance facilities for the INS within reasonable distance of the International Port of Entry at Otay Mesa in western San Diego County, California.

The purchase of 20 acres of property in unincorporated western San Diego County will be the proposed action evaluated in the EA. The EA will examine the potential impacts to the environment that may result from three alternatives and a ''no action'' alternative. Implementation of either action alternative would result in the construction of a one or two story building of approximately 75,000 square feet, vehicle maintenance and storage facilities, and associated parking lots, landscaping, and infrastructure improvements. Major environmental issues that will be addressed in the EA include, but are not limited to, socioeconomic impacts, air and water quality, traffic and transportation, endangered species, cultural resources, and local infrastructure impacts. The draft EA is due to be published in September 2002. A public hearing and a 45-day review period will follow the publication and distribution of the Draft EA. Four alternatives are being considered for this project. These include construction on a 20-acre parcel known as the Swallow Parcel at Alta Road and Siempre Viva Road, construction on a 35-acre parcel at Alta Road and the yet-to-be constructed Lone Star Road, construction on a 20-acre parcel also off Alta Road north of Lone Star Road, or a no action alternative.

The appropriate federal, state and local agencies, private organizations and citizens who have previously expressed or are known to have interest in this proposal will be placed on a mailing list to receive project-related materials.

A Public Scoping Meeting

Will be held Thursday, July 18, 2002 at 6:30 p.m. at the Otay Mesa Branch Library 3003 Coronado Avenue, San Diego.

The purpose of this hearing is to receive written and verbal comments regarding the potential environmental impacts of the land purchase and construction of the Border Patrol facility. A brief presentation will precede the request for public comment. GSA and INS representative will be available at this meeting to receive comments from the public. Translation services will be made available upon request tot he GSA.

To ensure that the full range of issues related to this proposal action are addressed and all significant issues identified, comments and suggestions are invited from all interested parties. Comments or questions concerning this proposed action and the EA should be directed to GSA at the address provided above.

Kevin F. Waldron,

Site Specialist.

[FR Doc. 02–17510 Filed 7–11–02; 8:45 am]

BILLING CODE 6620–27–M

DEPARTMENT OF HEALTH AND HUMAN SERVICES

Centers for Disease Control and Prevention

[Program Announcement 02168]

Clinical Immunization Safety Assessment Centers (CISA); Notice of Availability of Funds for Fiscal Year 2002; Amendment

A notice announcing the availability of Fiscal Year 2002 funds for a cooperative agreement program for Clinical Immunization Safety Assessment Centers (CISA) was published in the **Federal Register** on June 24, 2002, [Vol. 67 Number 121, Pages 42564–42566]. The notice is amended as follows: On page 42565, first column, under Section C. Eligible Applicants, at the end of the first paragraph, add the following sentence: ''The existing CISA Network includes Boston Medical Center, Columbia Presbyterian, John Hopkins (and it's subcontractor, University of Maryland), Kaiser Permanente Northern California (and it's subcontractors Vanderbilt and Stanford).''

Dated: July 5, 2002.

Sandra R. Manning,

CGFM, Director, Procurement and Grants Office, Centers for Disease Control and Prevention.

[FR Doc. 02–17505 Filed 7–11–02; 8:45 am]

BILLING CODE 4163–18–P

DEPARTMENT OF HEALTH AND HUMAN SERVICES

Administration for Children and Families

Submission for OMB Review; Comment Request

Title: Implementation of Promoting Safe and Stable Families by Indian Tribes.

OMB No.: New Collection.

Description: The purpose of this study is to examine the ways in which Indian Tribes used funds they received under

title IV–B subpart 2 to provide services that strengthen families' ability to care for their children. Additionally, a broad range of related child welfare issues with respect to Indian Tribes will be explored. Consistent with this approach, the research framework for this study documents and analyzes a full range of implementation issues for Promoting Safe and Stable Families (PSSF)—planning; accomplishments and changes; organization and infrastructure; related services and practices; and resource uses and allocation—over time and across various stakeholders involved. This study also provides a historical perspective on Tribal implementation of the PSSF legislation, including recent emphasis on strengthening parental relationships and promoting healthy marriages.

Respondents: Tribal Leaders; Program Managers for title IV–B, subpart 1 and 2 and Front Line Workers for title IV–B, subpart 1 and 2; Child Welfare/Human Service Collaborators; Funding Officials; and Court Officials.

ANNUAL BURDEN ESTIMATES

Instrument	Number of respondents	Number of responses per respondent	Average burden hours per response	Total burden hours
Tribal Leaders	40	1	1	40
Program Managers and Front Line Workers	120	1	1	120
Funding Officials	20	1	1	20
Child Welfare/Human Service Collaborators	60	1	1	60
Court Officials	20	1	1	20
Estimated Total Annual Burden Hours				260

Additional Information

Copies of the proposed collection may be obtained by writing to The Administration for Children and Families, Office of Information Services, 370 L'Enfant Promenade, SW., Washington, DC 20447, Attn: ACF Reports Clearance Officer.

OMB Comment

OMB is required to make a decision concerning the collection of information between 30 and 60 days after publication of this document in the **Federal Register**. Therefore, a comment is best assured of having its full effect if OMB receives it within 30 days of publication. Written comments and recommendations for the proposed information collection should be sent directly to the following: Office of Management and Budget, Paperwork Reduction Project, 725 17th Street, NW., Washington, DC 20503, Attn: Desk Officer for ACF.

Dated: July 8, 2002.

Bob Sargis,

Reports Clearance Officer.

[FR Doc. 02–17480 Filed 7–11–02; 8:45 am]

BILLING CODE 4184–01–M

DEPARTMENT OF HEALTH AND HUMAN SERVICES

Office of Community Services

[Program Announcement No. OCS–2002–08]

Notice of Second Request for Applications Under the Office of Community Services Fiscal Year 2002 Assets for Independence Demonstration Program (IDA Program)

AGENCY: Office of Community Services (OCS), Administration for Children and Families, Department of Health and Human Services.

ACTION: Announcement of continuing availability of funds and request for a second round of competitive applications under the Office of Community Services' Assets for Independence Demonstration Program.

SUMMARY: Applications received pursuant to the ACF Program Announcement issued in the **Federal Register** on April 15, 2002 (69 FR 18312) revealed there is an insufficient number of acceptable applications in the first round of proposal reviews for OCS to fully expend available funds. Therefore, the Office of Community Services announces a second invitation to eligible entities to submit applications pursuant to that announcement. Applications must be received on or before August 5, 2002.

Application Deadline: Applications must be received on or before August 5, 2002 in order to be considered for review and funding.

FOR FURTHER INFORMATION CONTACT: Sheldon Shalit, Administration for Children and Families, Office of Community Services, 370 L'Enfant Promenade, SW., Washington, DC 20447; telephone: 202–401–4807; e-mail: *sshalit@acf.hhs.gov.*

Dated: July 1, 2002.

Clarence H. Carter,

Director, Office of Community Services.

[FR Doc. 02–17519 Filed 7–11–02; 8:45 am]

BILLING CODE 4184–01–M

DEPARTMENT OF HEALTH AND HUMAN SERVICES

Food and Drug Administration

Request for Nominations for Voting Members on Public Advisory Committees

AGENCY: Food and Drug Administration, HHS.

ACTION: Notice.

The Food and Drug Administration (FDA) is requesting nominations for voting members to serve on the Allergenic Products Advisory Committee, Blood Products Advisory Committee, Transmissible Spongiform Encephalopathies Advisory Committee, and the Vaccines and Related Biological Products Advisory Committee in the Center for Biologics Evaluation and Research (CBER). Nominations will be accepted for vacancies that will or may occur through December 31, 2003.

FDA has a special interest in ensuring that women, minority groups, and individuals with disabilities are adequately represented on advisory committees and, therefore, encourages nominations of qualified candidates from these groups.

DATES: Because scheduled vacancies occur on various dates throughout each year, no cutoff date is established for the receipt of nominations. However, when possible, nominations should be received at least 6 months before the date of scheduled vacancies for each year, as indicated in this notice.

ADDRESSES: All nominations and curricula vitae should be sent to the appropriate contact person in the **FOR FURTHER INFORMATION CONTACT** section of this document.

FOR FURTHER INFORMATION CONTACT:

Regarding nominations except for consumer representatives: Jane Brown, Center for Biologics Evaluation and Research (HFM–71), Food and Drug Administration, 1401 Rockville Pike, Rockville, MD 20852–1448, 301–827–0314.

Regarding nominations for consumer representatives: Linda Sherman, Advisory Committee Oversight and Management Staff (HF–4), Food and Drug Administration, 5600 Fishers Lane, Rockville, MD 20857, 301–827–1220.

SUPPLEMENTARY INFORMATION: FDA is requesting nominations of voting members with appropriate expertise for vacancies listed as follows:

1. Allergenic Products Advisory Committee: Three vacancies occurring August 31, 2003; immunology, pediatrics, internal medicine, biochemistry, statistics, consumer interest, and related scientific fields.

2. Blood Products Advisory Committee: One vacancy occurring in September 30, 2002, and six vacancies occurring on September 30, 2003; clinical and administrative medicine, hematology, immunology, blood banking, surgery, internal medicine, biochemistry, engineering, statistics, biological and physical sciences, and other related scientific fields.

3. Transmissible Spongiform Encephalopathies Advisory Committee: Five vacancies occurring January 31, 2003; clinical administrative medicine, hematology, virology, neurology, infectious diseases, immunology, blood banking, surgery, internal medicine, biochemistry, biostatistics, epidemiology, biological and physical sciences, sociology/ethics, and other related professions.

4. Vaccines and Related Biological Products Advisory Committee: Five vacancies occurring in January 31, 2003; immunology, molecular biology, recombinant deoxyribonucleic acid (rDNA), virology, bacteriology, epidemiology, biostatistics, allergy, preventive medicine, infectious diseases, pediatrics, microbiology, biochemistry, and consumer interest.

Functions

1. *Allergenic Products Advisory Committee*

Reviews and evaluates available data concerning the safety, effectiveness, and adequacy of labeling of marketed and investigational allergenic biological products or materials that are administered to humans for the diagnosis, prevention, or treatment of allergies and allergic diseases.

2. *Blood Products Advisory Committee*

Reviews and evaluates available data concerning the safety, effectiveness, and appropriate use of blood and products derived from blood and serum or biotechnology which are intended for use in the diagnosis, prevention, or treatment of human diseases.

3. *Transmissible Spongiform Encephalopathies Advisory Committee*

Reviews and evaluates available scientific data concerning the safety of products which may be at risk for transmission of spongiform encephalopathies having an impact on the public health.

4. *Vaccines and Related Biological Products Advisory Committee*

Reviews and evaluates data concerning the safety, effectiveness, and appropriate use of vaccines and related biological products which are intended for use in the prevention, treatment, or diagnosis of human diseases.

Qualifications

Persons nominated for membership on the committees shall have adequately diversified experience appropriate to the work of the committee in such fields as clinical and administrative medicine, engineering, biological and physical sciences, statistics, and other related professions. The nature of specialized training and experience necessary to qualify the nominee as an expert suitable for appointment may include experience in medical practice, teaching, and/or research relevant to the field of activity of the committee. The particular needs at this time for each committee are shown in section I of this document. The term of office is up to 4 years, depending on the appointment date.

Nomination Procedures

Any interested person may nominate one or more qualified persons for membership on one or more of the advisory committees. Self-nominations are also accepted. Nominations shall include the name of the committee, a complete curriculum vitae of each nominee, current business address and telephone number, and shall state that the nominee is aware of the nomination, is willing to serve as a member (name of committee(s) must be specified), and appears to have no conflict of interest that would preclude membership. FDA will ask the potential candidates to provide detailed information concerning such matters as financial holdings, employment, and research grants and/or contracts to permit evaluation of possible sources of conflict of interest.

Consumer Representatives

Any interested person may nominate one or more qualified persons for membership on one or more of the advisory committees to represent consumer interests. Self-nominations are also accepted. To be eligible for selection, the applicant's experience and/or education will be evaluated against Federal civil service criteria for the position to which the person will be appointed.

Selection of members representing consumer interests is conducted through consumer organizations that have the responsibility for recommending candidates for the agency's selection. Candidates should possess appropriate qualifications to understand and contribute to the committee's work.

Nominations shall include a complete curriculum vita of each nominee, current address and telephone numbers, and shall state that the nominee is aware of the nomination, is willing to serve as a member, and appears to have no conflict of interest that would preclude membership. FDA will ask the potential candidates to provide detailed information concerning such matters as financial holdings, employment, and research grants and/or contracts to permit evaluation of possible sources of conflict of interest. The nomination should state whether the nominee is interested only in a particular advisory committee or in any advisory committee. The term of office is up to 4 years, depending on the appointment date.

This notice is issued under the Federal Advisory Committee Act (5 U.S.C. app. 2) and 21 CFR part 14 relating to advisory committees.

Dated: July 5, 2002.

William K. Hubbard,

Senior Associate Commissioner for Policy, Planning, and Legislation.

[FR Doc. 02–17514 Filed 7–11–02; 8:45 am]

BILLING CODE 4160–01–S

DEPARTMENT OF HEALTH AND HUMAN SERVICES

Food and Drug Administration

Evidence Based Assisted Reproductive Technologies; Public Workshop

AGENCY: Food and Drug Administration, HHS.

ACTION: Notice of public workshop.

The Food and Drug Administration (FDA) in cosponsorship with the National Institutes of Health (NIH), and Department of Health and Human Services (DHHS), Office of Women's Health is announcing the following public workshop entitled: ''Evidence Based Assisted Reproductive Technologies (ART).'' The topics to be discussed include: (1) The FDA regulatory framework; (2) methods of supporting research in this area by NIH; and (3) scientific, social, ethical and policy issues concerning ART.

Date and Time: The public workshop will be held on September 18, 2002, from 8:30 a.m. to 4:30 p.m., and September 19, 2002, from 8 a.m. to 12 a.m.

Location: The public workshop will be held at Lister Hill Center, Bldg. 38A, NIH, 8600 Rockville Pike, Bethesda, MD.

Contact Person: *For information about this notice*: Michael D. Anderson, Center for Biologics Evaluation and Research (HFM–17), Food and Drug Administration, 1401 Rockville Pike, Rockville, MD 20852, 301–827–6210, FAX 301–594–1944.

For information about the public workshop: Melanie Whelan, Center for Biologics Evaluation and Research (HFM–40), Food and Drug Administration, 1401 Rockville Pike, Rockville, MD 20852, 301–827–3079, FAX 301–827–3843, or e-mail: whelan@cber.fda.gov.

Registration: Send registration information (including name, title, firm name, address, telephone, and fax number) to Melanie Whelan (see *Contact Person*) by Friday, September 6, 2002. The registration form is available at http://www.fda.gov/cber/meetings.htm. There is no registration fee for the public workshop. Space is limited, therefore interested parties are encouraged to register early. There will be no onsite registration.

If you need special accommodations due to a disability, please contact Melanie Whelan at least 7 days in advance.

SUPPLEMENTARY INFORMATION: This public workshop will provide a forum for discussion of scientific, social, ethical, and policy issues related to ART. The public workshop will be of primary interest to consumers, researchers, academia, ART practitioners, and sponsors of clinical trials evaluating novel ART. The goals of the public workshop are to: (1) Assess the usefulness of animal models in evaluating the safety and efficacy of human ART, and (2) identify social and ethical issues specific to ART. These issues are of interest to FDA, NIH, and DHHS to guide development of scientific initiatives, policy, and regulations in this area and to identify areas where research funding may be needed.

Transcripts: Transcripts of the public workshop may be requested in writing from the Freedom of Information Office (HFI–35), Food and Drug Administration, 5600 Fishers Lane, rm. 12A–16, Rockville, MD 20857, approximately 15 working days after the meeting at a cost of 10 cents per page. The transcript of the workshop will also be available on the Internet at http://www.fda.gov/cber/minutes/workshop-min.htm.

Dated: July 8, 2002.

Margaret M. Dotzel,

Associate Commissioner for Policy.

[FR Doc. 02–17584 Filed 7–11–02; 8:45 am]

BILLING CODE 4160–01–S

DEPARTMENT OF HEALTH AND HUMAN SERVICES

Food and Drug Administration

Pediatric Oncology Drug Development; Public Workshop

AGENCY: Food and Drug Administration, HHS.

ACTION: Notice of public workshop.

The Food and Drug Administration (FDA) is announcing a public workshop, cosponsored with the American Academy of Pediatrics (AAP), regarding pediatric oncology drug development. The public workshop is intended to provide information for and perspective from advocacy groups, interested health care providers, academia, and industry organizations on various aspects of drug development in pediatric oncology, including prioritization of new and emerging therapeutic alternatives, clinical trial design, and access to new therapeutic agents. The input from this public workshop will be used in developing topics for discussion at future meetings of the Pediatric Subcommittee of the Oncologic Drugs Advisory Committee (the subcommittee).

Date and Time: The public workshop will be held on Thursday, July 18, 2002, from 8 a.m. to 4 p.m.

Location: The public workshop will be held in the Center for Drug Evaluation and Research Advisory Committee Conference Room, rm. 1066, 5630 Fishers Lane, Rockville, MD 20857. Seating is limited and available only on a first-come, first-served basis. Please note there is very limited parking in the vicinity of 5630 Fishers Lane, but it is near the Twinbrook Metro station. Please bring picture identification in order to clear building security.

Contact: Steven I. Hirschfeld, Center for Drug Evaluation and Research (HFD–150), Food and Drug Administration, 5600 Fishers Lane, Rockville, MD 20857, 301–827–1532, e-mail: HIRSCHFELDS@CDER.FDA.GOV.

SUPPLEMENTARY INFORMATION: FDA is announcing a public workshop, cosponsored with the AAP, regarding pediatric oncology drug development. On January 4, 2002, the President signed into law the Best Pharmaceuticals for Children Act (Public Law 107–109). Section 15 of the Best Pharmaceuticals for Children Act (Section 15) relates to the subcommittee.

Section 15 directs the subcommittee, in carrying out ''the mission of reviewing and evaluating the data concerning the safety and effectiveness of marketed and investigational human drug products for use in the treatment of pediatric cancers,'' to:

- Evaluate and, to the extent practicable, prioritize new and emerging therapeutic alternatives available to treat pediatric cancer;
- Provide recommendations and guidance to help ensure that children with cancer have timely access to the most promising new cancer therapies; and
- Advise on ways to improve consistency in the availability of new therapeutic agents.

The agency is seeking public input to inform its future decisionmaking in regard to Section 15.

The agency encourages individuals, patient advocates, industry, consumer groups, health care professionals, researchers, and other interested persons to attend this public workshop.

Requests to Make Oral Presentations: The public workshop agenda allows opportunities for oral presentations from interested persons. If you desire to make a formal oral presentation, please notify the contact person (see the *Contact* section of this document) before July 17, 2002, and provide your name,

address, telephone number, fax number, e-mail address, title, business affiliation (if applicable), the sponsor of the presentation (e.g., the organization paying travel expenses or fees), a brief summary of the presentation, and the approximate amount of time requested for the presentation. Presentation times may be limited. Persons or groups having similar interests are encouraged to consolidate their presentations and present them through a single representative.

Persons needing a sign language interpreter or other special accommodations should notify the contact person by July 17, 2002.

Transcripts: Transcripts of the public workshop will be available for review at the Dockets Management Branch Public Reading Room, Food and Drug Administration, rm. 1061, 5630 Fishers Lane, Rockville, MD 20852 and on the Internet at http://www.fda.gov/ohrms/dockets/ac/cder02.htm or you may request a transcript of the public workshop from the Freedom of Information Staff (HFI–35), Food and Drug Administration, rm. 12A–16, 5600 Fishers Lane, Rockville, MD 20857, approximately 20 working days after the public workshop, at a cost of 10 cents per page.

Dated: July 8, 2002.

Margaret M. Dotzel,

Associate Commissioner for Policy.

[FR Doc. 02–17513 Filed 7–11–02; 8:45 am]

BILLING CODE 4160–01–S

DEPARTMENT OF HOUSING AND URBAN DEVELOPMENT

[Docket No. FR–4736–N–08]

Notice of Proposed Information Collection for Public Comment—Housing Agency (HA) Calculation of Occupancy Percentage for a Requested Budget Year (RBY) PHA-Owned Rental Housing Performance Funding System (PFS)

AGENCY: Office of the Assistant Secretary for Public and Indian Housing, HUD.

ACTION: Notice.

SUMMARY: The proposed information collection requirement described below will be submitted to the Office of Management and Budget (OMB) for review, as required by the Paperwork Reduction Act. The Department is soliciting public comments on the subject proposal.

DATES: *Comments Due Date:* September 10, 2002.

ADDRESSES: Interested persons are invited to submit comments regarding this proposal. Comments should refer to the proposal by name and/or OMB Control number and should be sent to: Mildred M. Hamman, Reports Liaison Officer, Public and Indian Housing, Department of Housing and Urban Development, 451 7th Street, SW., Room 4238, Washington, DC 20410–5000.

FOR FURTHER INFORMATION CONTACT: Mildred M. Hamman, (202) 708–3642, extension 4128, for copies of the proposed forms and other available documents. (This is not a toll-free number.)

SUPPLEMENTARY INFORMATION: The Department will submit the proposed information collection to OMB for review, as required by the Paperwork Reduction Act of 1995 (44 U.S.C. Chapter 35, as amended).

This Notice is soliciting comments from members of the public and affected agencies concerning the proposed collection of information to: (1) Evaluate whether the proposed collection of information is necessary for the proper performance of the functions of the agency, including whether the information will have practical utility; (2) evaluate the accuracy of the agency's estimate of the burden of the proposed collection of information; (3) enhance the quality, utility, and clarity of the information to be collected; and (4) minimize the burden of the collection of information on those who are to respond, including through the use of appropriate automated collection techniques or other forms of information technology; *e.g.,* permitting electronic submission of responses.

This Notice also lists the following information:

Title of Proposal: HA Calculation of Occupancy Percentage for a Requested Budget Year (RBY).

OMB Control Number: 2577–0066.

Description of the need for the information and proposed use: This collection of information is necessary to ensure that Housing Agencies determine an appropriate and justifiable occupancy percentage for RBY in a uniform manner when calculating operating subsidy eligibility under the PFS.

Agency form numbers, if applicable: HUD–25728.

Members of affected public: State and Local Governments (Public Housing Agencies).

Estimation of the total number of hours needed to prepare the information collection including number of respondents, frequency of response, and hours of response: 3,100 PHAs (respondents), one form per PHA, one hour per response for a total of 3,100 hours which includes preparation of the response (3,100 hours) and recordkeeping burden.

Status of the proposed information collection: Extension.

Authority: Section 3506 of the paperwork Reduction Act of 1995, 44 U.S.C. Chapter 35, as amended.

Dated: July 2, 2002.

Michael Liu,

Assistant Secretary for Public and Indian Housing.

BILLING CODE 4210–33–M

HA Calculation of Occupancy Percentage for a Requested Budget Year (RBY)

PHA/IHA-Owned Rental Housing Performance Funding System (PFS)

U.S. Department of Housing and Urban Development
Office of Public and Indian Housing

OMB Approval No. 2577-0066
(Exp. 9/30/2002)

1a. Name and Address of PHA/IHA (Include Street Address, City, State, Zip Code)	2a. Contact (Person who can best answer questions about this submission) 2.b Contact's Phone Number (include area code)

3. RBY Beginning Date: (mo/day/yyyy)	4. Type of Submission	5. PAS/LOCCS Project Number	6. Report Date (mo/day/yyyy) (check one box)	7. Data Source
	☐ Original ☐ Revision No. ( )		☐ Actual Day ☐ Average for Actual Month	☐ form HUD-51234 ☐ Rent Roll Records

Part A. Actual Occupancy Data as of Report Date

8. Units Occupied	
9. Units Available	
10. Actual Occupancy Percentage (Divide line 8 by line 9; multiply by 100 and round to nearest whole)	%

Stop & Note 11. If the HA-wide occupancy percentage shown on line 10 is 97% or greater **and** the HA believes that an average occupancy rate of at least 97% is sustainable for the RBY, then check the box below. You have completed the form and do not need to proceed further.

☐ High Occupancy HA: Occupancy Percentage is 97% or higher and is sustainable for the RBY ➔ Use 97% as the Projected Occupancy Percentage on Part B, line 11 of form HUD-52723

12. Units vacant as of Report Date (subtract line 8 from line 9 and enter result)	

Stop & Note 13. If the result on line 12 is five or fewer vacant units **and** the HA believes that during the RBY: 1) the inventory (line 9) will not change; and, 2) the number of vacant units on line 12 will be vacant for the full RBY, then check the box below. You have completed the form and do not need to proceed further.

☐ High Occupancy HA with five or fewer vacant units ➔ Use line 10 for the Projected Occupancy Percentage on Part B, line 11 of form HUD-52723

Part B. Distribution of Actual Vacancies By Major Cause Given below are circumstances and actions recognized by HUD as possible causes of vacancies that are beyond the control of the HA to correct. If appropriate, please distribute the number of vacant units reported on line 12 among these causes. Attach sheet identified with HA name and address, the RBY beginning date, and ACC number. Use the sheet to describe, for each circumstance; when the circumstance occurred; the location of the units involved; why the circumstance is preventing the HA from occupying, selling, demolishing, rehabilitating, reconstructing, consolidating or modernizing the vacant units; and the likelihood that these circumstances will be mitigated or eliminated in the RBY.

14. Units vacant because of litigation (e.g., units that are being held vacant as part of court-ordered or HUD-approved desegregation plan)	
15. Units vacant because of Federal, Tribal, or State laws of general applicability. (Note: do not include units vacant only because they do not meet minimum construction or habitability standards.)	
16. Units vacant due to changing market conditions	
17. Units vacant because of natural disaster	
18. Units vacant because of insufficient funding for otherwise approvable CIAP application	
19. RMC-managed units vacant because of failure of HA to fund approvable request for Federal modernization funding **(This line for use only by RMCs)**	
20. Units vacant because of casualty loss and need to settle insurance claims	
21. Total Units Vacant Due To Circumstances Beyond The HA's Control (Enter sum of lines 14 - 20)	
22. Units vacant after adjusting for circumstances beyond the HA's control (Subtract line 21 from line 12)	

Stop & Note 23. If the result on line 22 is five or fewer vacant units **and** the HA believes that during the RBY: 1) the inventory (line 9) will not change; and, 2) the number of vacant units on both lines 21 and 22 will be vacant for the full RBY, then check the box below. You have completed the form and do not need to proceed further.

☐ High Occupancy HA with five or fewer vacant units after adjustment for vacancies beyond its control ➔ Use line 10 for the Projected Occupancy Percentage on Part B, line 11 of form HUD-52723

24. Vacancy Percentage after adjusting for beyond control circumstances (Divide line 22 by line 9, multiply by 100, and round to nearest whole)	%

Stop & Note 25. If the result on line 24 is 3% or less **and** the HA believes that during the RBY: 1) the inventory (line 9) will not change; and, 2) the number of vacant units on lines 21 and 22 will be vacant for the full RBY, then check the box below. You have completed the form and do not need to proceed further.

☐ High Occupancy HA: 3% or less vacancy rate afteradjustment for vacancies beyond control ➔ Use line 10 for the Projected Occupancy Percentage on Part B, line 11 of form HUD-52723

This form replaces forms HUD-52728-A thru -C which have been canceled. Previous edition is obsolete.

form **HUD-52728** (8/2001)
ref Handbook 7475.13

Part C. Status of Units Undergoing Modernization as of Report Date If changes occur after the Report Date but prior to submission of this form, the most current status will be shown.

26. Protected Units	Occupied Units	Vacant Units
a: Number of units that are under modernization construction (contract awarded or force account work started)		
b. Number of units not under construction contract but included in a HUD-approved modernization budget where the time period for placing the units under construction (two FFYs after FFY of approval) has not yet expired.		
27. Unprotected Units: Number of units included in a HUD-approved modernization budget where the time period for placing the units under construction (two FFYs after FFY of approval) has expired.		

Part D. Units Estimated to be Available for Occupancy During RBY	(a) No. of Units	(b) Avg. No. of Mos. in RBY	(c) No. of Unit Mos.(a x b)
28. Units Available as of Report Date (Enter line 9)		12	
29. Additional Units Available During RBY because of Development/Acquisition of PFS-Eligible projects	+		+
30. Units Unavailable During RBY because of Demolition/Disposition/Conversion Actions Approved By HUD	-		-
31. Total (Add lines 28 and 29; subtract line 30)			

Part E. Units Estimated to be Occupied During RBY			
32. Units Occupied as of Report Date (Enter line 8)		12	
33. Additional Units Occupied during RBY because of Development/Acquisition of PFS-Eligible Projects	+		+
34. Reoccupancy during RBY of Units Vacated for Circumstances Beyond the HA's Control	+		+
35. Reoccupancy during RBY of Vacant Units in a Funded Modernization Program	+		+
36. Occupied Units in Funded Modernization Program Being Vacated during RBY	-		-
37. Occupied Units Being Vacated during RBY because of Demolition/Disposition/Conversion Actions Approved by HUD. If there are occupied units that become vacant after the Report Date but before the start of the RBY because of circumstances and actions beyond the HA's control, place that number here ( ) and include in total shown on 37. Attach separate sheet with same information requested in Part C.			
38. Total (Add lines 32-35, subtract lines 36 and 37)			

Part F. Occupancy Percentage During RBY	
39. Total Unit Months of Occupancy (Enter line 38c)	
40. Total Unit Months Available for Occupancy (Enter line 31c)	
41. Occupancy Percentage for RBY (Divide line 39 by line 40; multiply by100 and round to nearest whole)	%
42. Average Number of Vacant Units During RBY (Subtract line 39 from line 40;divide result by 12 and round to nearest whole)	

Stop & Note

43. If the result on line 41 is 97% or higher **or** if the result on line 42 is five or less, then check the appropriate box below. You have completed the form and do not need to proceed further.

- ☐ a. High Occupancy HA: Occupancy Percentage is 97% or higher for the RBY ➔ Use 97% as the Projected Occupancy Percentage on Part B, line 11 of form HUD-52723
- ☐ b. High Occupancy HA with five or fewer vacant units ➔ Use line 41 for the Projected Occupancy Percentage on Part B, line 11 of form HUD-52723

Part G. Vacancy Percentage for RBY Adjusted for Modernization		
44. Total Unit Months of Vacancy in RBY (Enter line 40 less line 39)		
45. Total Unit Months for Vacant Units In Funded Mod. and Under Construction or Funded for Construction (Sum the vacant units of lines 26a and b; multiply by 12)		
46. If any of the vacant units on lines 26a or b will be reoccupied during the RBY, enter that number times the average number of months during the RBY these units will be reoccupied.	-	
47. If any of the occupied units on lines 26a or b will be vacated during the RBY for mod. construction, enter that number times the average number of monthsduring the RBY these units will be vacated.	+	
48. Total Unit Months for Vacant Units In Funded Mod. And Under Construction or Funded For Construction In RBY (Add line 45; less line 46; plus line 47)		
49. Total Unit Months of Vacancy in RBY Adjusted for Modernization (Enter line 44 less line 48)		
50. Vacancy Percentage for RBY Adjusted for Modernization (Divide line 49 by line 40; multiple by 100; and round to nearest whole.)		%
51. Average Number of Vacant Units in RBY Adjusted for Modernization (Divide line 49 by 12; round to nearest whole)		

Stop & Note

52. If the result on line 50 is 3% or lower **or** if the result on line 51 is five or less, then check the appropriate box below. You have completed the form and do not need to proceed further.

- ☐ a. High Occupancy HA: Vacancy Percentage is 3% or less for the RBY after Modernization Adjustment ➔ Use line 41 as the Projected Occupancy Percentage on Part B, line 11 of form HUD-52723
- ☐ b. High Occupancy HA: five or fewer vacant units after Modernization Adjustment ➔ Use line 41 for the Projected Occupancy Percentage on Part B, line 11 of form HUD-52723

This form replaces forms HUD-52728-A thru -C which have been canceled. Previous edition is obsolete.

form **HUD-52728** (8/2001)
ref Handbook 7475.13

Part H. Vacancy Percentage for RBY Adjusted for Both Modernization *and* Beyond Control Circumstances	
53. Total Unit Months of Vacancy in RBY (Enter line 44)	
54. Total Unit Months of Vacancy in RBY Due to Modernization (Enter line 48)	
55. Total Unit Months of Vacancy in RBY Due to Beyond Control Vacancies (Enter line 21 times 12; less any entry made on line 34c)	
56. Total Unit Months of Vacancy After Above Adjustments (Enter line 53 less lines 54 and 55)	
57. Vacancy Percentage for RBY After Above Adjustments (Divide line 56 by line 40; multiple by 100; and round to nearest whole.)	%
58. Average Number of Vacant Units in RBY After Above Adjustments (Divide line 56 by 12; round to nearest whole)	

Stop & Note

59. If the result on line 57 is 3% or lower **or** if the result on line 58 is five or less, then check the appropriate box below. You have completed the form and do not need to proceed further.

- ☐ a. High Occupancy HA: Vacancy Percentage is 3% or less for the RBY after Modernization Adjustment → Use line 41 as the Projected Occupancy Percentage on Part B, line 11 of form HUD-52723
- ☐ b. High Occupancy HA: five or fewer vacant units after Modernization Adjustment → Use line 41 for the Projected Occupancy Percentage on Part B, line 11 of form HUD-52723

Part I. Adjustment for Long Term Vacancies If the HA estimates that it will have a vacancy percentage of more than 3% for its RBY and more than five vacant units after adjusting for vacant units undergoing modernization and vacancies beyond its control, the HA will exclude all of its long-term vacancies (if any) from its count of units available for occupancy and use this section to determine its projected occupancy percentage.

60. Total Long-term Vacancies (Subtract vacant units shown on lines 21, 26a, and b from line 12. Analyze remaining vacancies and identify those units that have been vacant for more than 12 months as of the Report Date.)	
61. Unit Months of Vacancy Associated With Long-Term Vacancies (Multiply line 60 by 12)	
62. Total Unit Months Available for Occupancy in RBY Adjusted for Long-Term Vacancies (Subtract line 61 from line 31(c)) Use this UMA number in all other PFS calculations.	
63. Occupancy Percentage for RBY Adjusted for Long-Term Vacancies (Divide line 38(c) by line 62; multiply by 100 and round to nearest whole)	%
64. Average Number of Vacant Units in RBY after All Adjustments (Subtract line 60 from line 58)	
65. Total Unit Months of Vacancy in RBY after All Adjustments (Subtract line 61 from line 56)	
66. Vacancy Percentage for RBY Adjusted for Long-Term Vacancies (Divide line 65 by line 62; multiply by 100 and round to nearest whole)	%

Stop & Note

67. If the result on line 63 is 97% or higher **or** if the result on line 64 is five or less ***or*** if the result on line 66 is 3% or less, then check the appropriate box below. You have completed the form and do not need to proceed further.

- ☐ a. High Occupancy HA: Occupancy Percentage is 97% or higher for the RBY after Long-Term Vacancies Adjustment → Use 97% as the Projected Occupancy Percentage on Part B, line 11 of form HUD-52723. **Use the UMA result on line 62 in calculating PFS eligibility.**
- ☐ b. High Occupancy HA: Five or fewer vacant units after Adjustment for Long-TermVacancies → Use line 63 as the Projected Occupancy Percentage on Part B, line 11of form HUD-52723. **Use the UMA result on line 62 in calculating PFS eligibility.**
- ☐ c. High Occupancy HA: Vacancy Percentage is 3% or lower for the RBY after Long-Term Vacancies Adjustment → Use line 63 as the Projected Occupancy Percentage on Part B, line 11 of form HUD-52723. **Use the UMA result on line 62 in calculating PFS eligibility.**

Part J. Projected Occupancy Percentages for Low Occupancy HAs If the HA cannot determine an acceptable Projected Occupancy Percentage for the RBY using the above approach, it will use this section. The HA will use the lower of either 97% or that percentage based on having five units vacant for the RBY. Either percentage can be adjusted for vacant units undergoing modernization construction and vacancies beyond its control. Small HAs of 140 units or less will generally want to use a percentage based on five vacant units.

68. Enter 97% if HA has more than 140 units. If 140 or fewer units, determine occupancy percentage based on 5 vacant units, for RBY. (Take 60 unit months and divide by line 62; multiply by 100 and round to nearest whole. Subtract result from 100%)	%
69. Percentage Adjustment for Modernization and Beyond Control Vacancies (Add lines 48 plus 55; divide that sum by line 62; multiply by 100 and round to nearest whole)	%
70. Projected Occupancy Percentage for Low Occupancy HA (Take the percentage on line 68 and subtract the percentage shown on line 69. Use the result as the Projected Occupancy Percentage on Part B, line 11 of form HUD-52723. **Use the UMA result on line 62 in calculating PFS eligibility)**	%

Public reporting burden for this collection of information is estimated to average 1 hour per response, including the time for reviewing instructions, searching existing data sources, gathering and maintaining the data needed, and completing and reviewing the collection of information. This agency may not collect this information, and you are not required to complete this form, unless it displays a currently valid OMB control number.

Instructions for Preparing Form HUD-52728, HA Calculation of Occupancy Percentage for a Requested Budget Year (RBY)

The purpose of this form is to provide a structured format for Public Housing Authorities (PHAs), Indian Housing Authorities (IHAs), and, if applicable, Resident Management Corporations (RMCs) to use in developing an appropriate and justifiable projection of occupancy for the RBY. The projected occupancy percentage that is developed will be used as one element in the calculation of operating subsidy under the Performance Funding System (PFS), 24 CFR Parts 950 and 990, as applicable. The term Housing Authority (HA) will be used to collectively describe both PHAs and IHAs. The form is **not** for use by HAs requesting operating subsidy solely to cover the cost of an Independent Audit (IA).

The instructions should be read carefully since it may not be necessary for a HA to complete all sections of the form in order to determine an acceptable projected occupancy percentage for the RBY. The form has been designed to go from the most simple situation to the relatively more complex cases. If, at any point, an HA is able to classify itself as a High Occupancy HA, it does not need to proceed further with the form.

Headings:

RBY Beginning. Enter the beginning month, day and year of the requested budget year for which this form is submitted.

Type of Submission. Indicate whether this form is (1) the original submission for the RBY or (2) a revision of the latest approval for the subject fiscal year. If a revision, enter the revision number.

ACC Number. Enter the number of the Annual Contributions Contract (ACC) covering the projects for which this form is submitted.

PAS/LOCCS Project No. Enter the PAS/LOCCS Project Number applicable to the corresponding Calculation of Performance Funding System Operating Subsidy, form HUD-52723.

Report Date. Enter the date of the occupancy data collected to determine the actual occupancy percentage. **Unless otherwise approved by HUD**, that date will be the last day of the month ending six months before the start of the HA's RBY or the monthly average for the month ending six months before the start of its budget year. Check whether actual day data was used or an average was constructed using actual data for the month.

Data Source. Indicate the data source used to calculate the actual occupancy percentage.

Part A. Actual Occupancy Data as of Report Date

Using actual occupancy data as of the Report Date, an HA will determine its actual occupancy percentage and number of vacant units. For many HAs, this will be the only section that will need to be completed.

Part B. Distribution of Actual Vacancies By Major Cause

This part allows the HA to present data and supporting narrative on the number of units that are vacant for reasons that are beyond the control of the HA to correct. For a further description of allowable reasons, please refer to ¶ 990.102 and the definition of units vacant due to circumstances and actions beyond the HA's control.

Part C. Status of Units Undergoing Modernization

Data in this part will be used in determining the occupancy percentage for the RBY. If the RBY occupancy percentage is less than 97% and HA will have more than five vacant units, data from this part will be used in Part G to determine if the RBY occupancy percentage is justified. Report occupied units, as appropriate, on lines 26a., 26b., and 27, if they will be subsequently vacated in order for construction work to be performed and then reoccupied upon completion. If changes occur after the Report Date but prior to the submission of this form, the most current status will be shown.

Line 26. Enter data on the number of protected units, both vacant and occupied, as of the Report Date, which may fall into two categories: (a) the number of units that are under construction (contract awarded or force account work started); or (b) the number of units not under construction contract but included in a HUD-approved modernization budget where the time period for placing the units under construction (two Federal Fiscal Years (FFYs) after the FFY of approval) has not yet expired.

Line 27. Enter data on the number of unprotected units, both vacant and occupied, as of the Report Date, which are the number of units included in a HUD-approved modernization budget where the time period for placing the units under construction (two FFYS after FFY of approval) has expired and the units are not yet under construction. Note: When such units subsequently reach construction, they will become protected units. If a change in status occurs after the initial subsidy calculation has been approved, an HA may recalculate its subsidy eligibility as part of its year-end adjustments.

Part D. Units Estimated to be Available for Occupancy During RBY

Data which is entered on **line 29** or **line 30** must only reflect actions that have been approved by HUD, including approvals made after the Report Date but prior to the submission of this form. If there are pending applications for HUD approval of actions that would increase or decrease the number of units available for occupancy at the time of submission, that data will be excluded.

Part E. Units Estimated to be Occupied During RBY

Line 33. Use this line to show the number of units on line 29. (if any) that will be occupied during the RBY.

Line 34. Use this line to show the number of units on line 21. (if any) that will be occupied during the RBY.

Line 35. Use this line to show the number of vacant units on lines 26a and 26b. (if any) that will be reoccupied during the RBY.

Line 36. Use this line to show the number of occupied units on lines 26a, 26b, and 27. (if any) that will be vacated during the RBY.

Line 37. Use this line to show the number of units on line 30. (if any) that will be vacated during the RBY.

Part G. Vacancy Percentage for RBY Adjusted for Modernization

Note that this section deals with units that meet the definition of being vacant units undergoing modernization. The units must be under construction and on-schedule or funded for construction with the time period (two-year maximum after award) for fund obligation not expiring.

Part I. Adjustment for Long Term Vacancies

Note that if this section is used, the HA will be recalculating its Unit Months Available (UMAs) to exclude long-term vacancies and must use the recalculated result in its determination of PFS eligibility. If the UMAs for occupancy have been adjusted for long term vacancies, the unit months associated with those vacancies, line 61, shall be multiplied by 20% of the AEL (Part A, line 8 of the HUD-52723 prepared for RBY) and the result displayed on Part D, line 7 of the HUD-52723.

[FR Doc. 02–17489 Filed 7–11–02; 8:45 am]

BILLING CODE 4210–33–C

DEPARTMENT OF HOUSING AND URBAN DEVELOPMENT

[Docket No. FR–4730–N–28]

Federal Property Suitable as Facilities To Assist the Homeless

AGENCY: Office of the Assistant Secretary for Community Planning and Development, HUD.

ACTION: Notice.

SUMMARY: This Notice identifies unutilized, underutilized, excess, and surplus Federal property reviewed by HUD for suitability for possible use to assist the homeless.

EFFECTIVE DATE: July 12, 2002.

FOR FURTHER INFORMATION CONTACT: Mark Johnston, Department of Housing and Urban Development, Room 7262, 451 Seventh Street, SW., Washington, DC 20410; telephone (202) 708–1234; TTY number for the hearing- and speech-impaired (202) 708–2564, (these telephone numbers are not toll-free), or call the toll-free Title V information line at 1–800–927–7588.

SUPPLEMENTARY INFORMATION: In accordance with the December 12, 1988 court order in *National Coalition for the Homeless* v. *Veterans Administration*, No. 88–2503–OG (D.D.C.), HUD publishes a Notice, on a weekly basis, identifying unutilized, underutilized, excess and surplus Federal buildings and real property that HUD has reviewed for suitability for use to assist the homeless.

Today's Notice is for the purpose of announcing that no additional properties have been determined suitable or unsuitable this week.

Dated: July 2, 2002.

John D. Garrity,

Director, Office of Special Needs Assistance Programs.

[FR Doc. 02–17057 Filed 7–11–02; 8:45 am]

BILLING CODE 5210–29–M

DEPARTMENT OF THE INTERIOR

Office of the Secretary

Privacy Act of 1974, as Amended; Addition of a New System of Records

AGENCY: Department of the Interior.

ACTION: Proposed addition of a new system of records.

SUMMARY: The Department of the Interior is issuing public notice of its intent to add a new Privacy Act system of records to its inventory of records systems subject to the Privacy Act of 1974 (5 U.S.C. 552a). This action is necessary to meet the requirements of the Privacy Act to publish in the **Federal Register** notice of the existence and character of records systems maintained by the agency (5 U.S. C. 552a(e)(4)). The new system of records is called the Electronic Email Archive System (EEAS), Interior—OS–10.

EFFECTIVE DATE: 5 U.S.C. 552a(e)(11) requires that the public be provided a 30-day period in which to comment on the intended use of the information in the system of records. Any persons interested in commenting on this proposed system of records may do so by submitting comments in writing to the Departmental Privacy Act Officer, U.S. Department of the Interior, Office of the Chief Information Officer, MS 5312 MIB, 1849 C Street NW., Washington, DC 20240.

Comments received within 30 days of publication in the **Federal Register** will be considered. The system will be effective as proposed at the end of the comment period unless comments are received which would require a contrary determination. In that case the Department will publish any changes to the routine uses.

FOR FURTHER INFORMATION CONTACT: For information on the Electronic Email Archive System contact Regina Lawrence, Office of the Chief Information Officer, Department of the Interior at 202–208–5413, or mail at MS–5312–MIB, 1849 C St. NW., Washington, DC 20240.

SUPPLEMENTARY INFORMATION: The Interior Electronic Email Archive System (EEAS) will contain data from certain Department of the Interior bureaus/offices with Indian Trust program responsibilities for the purpose of responding to discovery requests from plaintiffs and requests from the Court, the Special Master, and the Court Monitor in *Cobell et al.* v. *Norton, et al.*, U.S.D.C. D.C., No. 1:96CV01285. The capability of the system to retrieve information from an email archive depository will assist compliance with court requirements.

Dated: July 9, 2002

Marilyn Legnini,

Departmental Privacy Act Officer, Office of the Chief Information Officer.

INTERIOR/OS–10.

SYSTEM NAME:

Electronic Email Archive System (EEAS).

SECURITY CLASSIFICATION:

Sensitive, but unclassified.

SYSTEM LOCATION:

The records of this system are located at a digital safe site at a location managed by the contractor for the Department of the Interior. Only information maintained at this site by the contractor is considered a Privacy Act system of records covered by this notice.

CATEGORIES OF INDIVIDUALS COVERED BY THE SYSTEM:

The system contains information on individuals who send and receive electronic messages using Internet email and interoffice email from and to those Departmental bureaus/offices involved with Indian Trust programs, and those individuals who are referred to in the electronic messages. These bureaus/offices are as follows: Office of the Solicitor, Bureau of Indian Affairs, Office of the Special Trustee for American Indians, Office of the Assistant Secretary—Indian Affairs, Bureau of Land Management, Office of the Assistant Secretary—Policy, Management, and Budget, Office of Hearings and Appeals, Office of Historical Trust Accounting, Office of the Secretary, and the Minerals Management Service.

CATEGORIES OF RECORDS IN THE SYSTEM:

Records include information from Internet email and interoffice email, including address of sender and receiver(s), subject, date sent or received, text of the message, name of attachment, attachment text, and certification status. The name and email address of the sender and receiver are captured along with the bcc, cc, subject line, and text of the message.

AUTHORITY FOR MAINTENANCE OF THE SYSTEM:

5 USC 301, 43 CFR 1455, and 40 CFR part 1441.

ROUTINE USES OF RECORDS MAINTAINED IN THE SYSTEM, INCLUDING CATEGORIES OF USERS AND THE PURPOSES OF SUCH USES:

The system's main purpose is to respond to discovery requests from plaintiffs and requests from the Court, the Special Master, and the Court Monitor in the *Cobell* v. *Norton* litigation, filed in the U.S. District Court for the District of Columbia.

Disclosures outside the Department of the Interior can be made to:

(a) Contractors who service and maintain the system for the Department, ensuring that all provisions of the Privacy Act, and all other applicable laws, regulations, and policies relating

to contracting and record security are met.

(b) Another Federal agency to enable that agency to respond to an inquiry by the individual to whom the record pertains.

(c) The Department of Justice, or to a court, adjudicative or other administrative body, or to a party in litigation before a court or adjudicative or administrative body, when:

(1) One of the following is a party to the proceeding or has an interest in the proceeding:

(a) The Department or any component of the Department;

(b) Any Departmental employee acting in his or her official capacity;

(c) Any Departmental employee acting in his or her individual capacity where the Department or the Department of Justice has agreed to represent the employee; and

(2) We deem the disclosure to be:

(a) Relevant and necessary to the proceeding; and

(b) Compatible with the purpose for which we compiled the information.

(d) The appropriate Federal agency that is responsible for investigating, prosecuting, enforcing or implementing a statute, rule, regulation or order, when we become aware of an indication of a violation or potential violation of the statute, rule, regulation, or order.

(e) A congressional office in response to an inquiry to that office by the individual to whom the record pertains.

POLICIES AND PRACTICES FOR STORING, RETRIEVING, ACCESSING, RETAINING, AND DISPOSING OF RECORDS IN THE SYSTEM:

STORAGE:

Information in this system of records is maintained in electronic format on a system hard drive.

RETRIEVABILITY:

This specific system has the capability of performing searches through email archive information identified in the ''Category of records'' section above using any word or number criteria. This capability makes it unique from other email archive systems that are maintained by Interior bureaus/offices, and therefore, this system becomes subject to Privacy Act requirements.

SAFEGUARDS:

The contractor maintaining this system must follow the requirements under 5 U.S.C. 552a(e)(10) and 43 CFR 2.51 for security standards. A security plan was developed to prevent unauthorized access to the system. The plan addresses application security, administration/user security, and application agreements. Access to the system is limited to authorized personnel whose official duties require such access. The EEAS system will be maintained at the Government contractor's facility at a secured data center.

RETENTION AND DISPOSAL:

Records in this system will be retained indefinitely pending completion of *Cobell et al.* v. *Norton, et al.*, U.S.D.C. D.C., No. 1:96CV01285 or until the Court orders the Department to retain/dispose of these records differently.

SYSTEM MANAGER(S) AND ADDRESS:

The Technology Services Division, Administrative Operations Directorate, National Business Center, Department of the Interior, MS–1540–MIB, 1849 C St. NW., Washington, DC 20240.

NOTIFICATION PROCEDURES:

To determine whether your records are in this Privacy Act system of records, contact the Privacy Act Officer at the bureau/office from which your email message was sent or where it was received (see list of participating bureau/offices identified in the ''Categories of individuals'' section above). Interior bureaus/offices are listed at the Department of the Interior Web site at *www.doi.gov.* The request must meet the requirements of 43 CFR 2.60. Provide the following information with your request:

(a) Proof of your identity;

(b) List of all the names by which you have been known, such as maiden name or alias;

(c) Your Social Security Number;

(d) Your mailing address;

(e) Time period(s) that records pertaining to you may have been created or maintained, to the extent known by you (*See* 43 CFR 2.60(b)(3)); and

(f) Specific description or identification of the records you are requesting (including whether you are asking for a copy of all of your records or only a specific part of them), and the maximum amount of money that you are willing to pay for their copying (See 43 CFR 2.63(b)(4)).

RECORD ACCESS PROCEDURES:

To request access to records, follow procedures in the ''Notification procedure'' section above. The request must meet the requirements of 43 CFR 2.63. Provide with your request the same information identified in the ''Notification procedures'' sections.

CONTESTING RECORD PROCEDURES:

To request an amendment of a record, send requests in writing to the contacts identified in the ''Notification procedure'' section above. The request must meet the requirements of 43 CFR 2.71.

RECORDS SOURCE CATEGORIES:

Some information maintained in the system is collected from mag-tapes provided by Interior bureau/office email backup systems from those installations identified in the ''Categories of individuals'' section above. This information is downloaded onto a hard drive managed by the contractor and stored digitally. Information from Interior bureau/office e-mail servers will be captured in real time, transmitted electronically through secured networks, and captured and stored electronically into the EEAS.

EXEMPTIONS CLAIMED FOR THE SYSTEM:

None.

[FR Doc. 02–17587 Filed 7–11–02; 8:45 am]

BILLING CODE 4310–RK–P

DEPARTMENT OF THE INTERIOR

Bureau of Land Management

Alaska Resource Advisory Council Meeting and Field Tour

AGENCY: Bureau of Land Management (BLM), Alaska State Office, Interior.

ACTION: Notice of meeting and field tour.

SUMMARY: The Bureau of Land Management's Alaska Resource Advisory Council will conduct a brief meeting at Prince William Sound Community College in Glennallen.

The purpose of the meeting is to provide a briefing for the council in preparation for a tour of BLM public lands along the Denali Highway. The meeting is open to the public. Members of the public may present brief oral comments to the council about BLM's management of the Denali Highway corridor during the meeting as time allows. Written comments will also be accepted.

The meeting will be followed by a two-day tour of the east portion of the Denali Highway corridor. The council will visit recreation areas, mining claims, off-highway vehicle trails, and cultural sites in the Tangle Lakes Archaeological District.

DATES: The meeting is July 28, 2002, 7–9 p.m. The field tour is July 29–30, 2002.

ADDRESSES: Inquiries or comments should be sent to BLM External Affairs, 222 W. 7th Avenue, #13, Anchorage, AK 99513–7599.

FOR FURTHER INFORMATION CONTACT: Teresa McPherson, (907) 271–3322 or e-mail *Teresa_McPherson@ak.blm.gov.*

SUPPLEMENTARY INFORMATION: The council provides advice and recommendations on resource and land management issues for 86 million acres of public lands administered by the BLM in Alaska. The council includes representatives from energy, tourism, and commercial recreation interests; conservation organizations; and elected officials, Alaska Native organizations, and the public at large.

Authority: The Alaska Resource Advisory Council meets in accordance with the Federal Land Policy and Management Act (FLPMA) and the Federal Advisory Committee Act of 1972.

Dated: May 29, 2002.

George P. Oviatt,

Acting State Director.

[FR Doc. 02–17638 Filed 7–11–02; 9:31 am]

BILLING CODE 4310–JA–P

DEPARTMENT OF THE INTERIOR

Bureau of Indian Affairs

Reconsidered Final Determination To Decline To Acknowledge the Chinook Indian Tribe/Chinook Nation

AGENCY: Bureau of Indian Affairs, Interior.

ACTION: Notice of reconsidered final determination.

SUMMARY: This notice is published in the exercise of authority delegated by the Secretary of the Interior (Secretary) to the Assistant Secretary—Indian Affairs (Assistant Secretary) by 209 DM 8. Pursuant to 25 CFR 83.10(m) and 25 CFR 83.11(h)(3), notice is hereby given that the Assistant Secretary declines to acknowledge the Chinook Indian Tribe/Chinook Nation, c/o Mr. Gary Johnson, P.O. Box 228, Chinook, Washington 98614, as an Indian tribe within the meaning of Federal law. This notice is based on a determination that the group does not meet all seven criteria set forth in 25 CFR 83.7 in the 1978 regulations, or in 25 CFR 83.7 as modified by 25 CFR 83.8 in the 1994 regulations.

DATES: Pursuant to 25 CFR 83.11(h)(3), this reconsidered determination is final and effective upon publication.

FOR FURTHER INFORMATION CONTACT: R. Lee Fleming, Chief, Branch of Acknowledgment and Research, (202) 208–3592.

SUPPLEMENTARY INFORMATION: The Department published a proposed finding to decline to acknowledge the Chinook Indian Tribe, Inc., in the **Federal Register** on August 22, 1997 (62 FR 44714). The Department published a final determination to acknowledge the Chinook Indian Tribe/Chinook Nation in the **Federal Register** on January 9, 2001 (66 FR 1690). The Quinault Indian Nation requested reconsideration of the final determination before the Interior Board of Indian Appeals (IBIA). On August 1, 2001, the IBIA affirmed the final determination with respect to matters within its jurisdiction (36 IBIA 245). However, the IBIA referred to the Secretary nine additional issues that it found to be outside of its jurisdiction. The Secretary then referred eight of those issues to the Assistant Secretary for reconsideration of the final determination. Those issues require a reconsideration of only criteria (a), (b), and (c). This decision addresses the eight issues referred and reconsiders the final determination to the extent impacted by the resolution of those issues. This reconsidered final determination is based on a reconsideration of all the evidence before the Department relevant to those criteria in accordance with the analysis of the eight referred issues.

The Chinook petitioner's members descend from the Lower Band of Chinook and also from the Wahkiakum, Kathlamet, and Willapa bands of Chinook, and the Clatsop tribe, also a Chinookan-speaking group, that lived historically along the lower Columbia River. The population of the Chinook bands was severely reduced by a series of epidemics in the 1780's, the 1830's, and the late 1850's. The United States negotiated treaties with these separate Chinook bands in 1851, but the Senate did not ratify them. Chinook representatives refused to sign a treaty negotiated in 1855. The Government created the Shoalwater Bay Reservation by executive order in 1866 for the ''Indians on Shoalwater Bay,'' who were intermixed Chinook and Chehalis Indians. The Government enlarged the Quinault Reservation by executive order in 1873 for the ''fish-eating Indians on the Pacific coast,'' a definition that has been interpreted as including the Chinook. By 1900, some Chinook descendants were listed on the censuses of these and other reservations. Other Chinook descendants lived off reservations among the non-Indian population and tended to cluster geographically in three separate settlements: at Bay Center on Shoalwater Bay, at Ilwaco at the mouth of the Columbia, and upriver along the shore of the Columbia around Dahlia. After the mid-1850's, the evidence of Chinook band or tribal organization becomes scarce. Chinook descendants participated in claims activities, seeking compensation for the loss of Chinook aboriginal territory, in the first decade of the 20th century, the decade after 1925, and the 1950's. These judicial proceedings also resulted, however, in a conclusion by the Court of Claims in 1906 that the Lower Band of Chinook had ''long ceased to exist'' as a band and a conclusion by a Federal district court in 1928 that the Chinook had lost their tribal organization. From the mid-1850's until 1951, when Chinook descendants organized to pursue historical Chinook claims, there is scant evidence to suggest that any Chinook community or organization existed as a distinct entity or that informal leaders had political influence over ancestors of the petitioner.

On the eight issues referred by the Secretary, this reconsidered final determination concludes that the previous Assistant Secretary had the authority to review the Chinook petition under the 1994 revised acknowledgment regulations, and that a reconsidered final determination should be made under both the 1978 and 1994 regulations to resolve the questions raised in this case about whether the result would be different under the revised 1994 regulations than under the original 1978 regulations. It also concludes that the previous Assistant Secretary had authority to retain an outside consultant to assist him in his consideration of the Chinook petition.

The final determination explicitly relied upon 1911, 1912, and 1925 statutes in deciding that the petitioner met criteria (a), (b) and (c). This reconsidered final determination concludes that those three statutes are not evidence that the Federal Government understood or identified the Chinook as still existing at the time the statutes were enacted. The 1925 claims statute, used in the final determination as evidence of previous Federal acknowledgment of the petitioner, was not ''clearly premised'' on the existence in 1925 of a Chinook political entity with a government-to-government relationship with the United States, which is the standard under the acknowledgment regulations for finding unambiguous previous Federal acknowledgment. This conclusion regarding these statutes is important for the reconsidered final determination because the final determination expressly found that ''[w]ere it not for the acts of Congress in 1911, 1912, and most importantly, 1925, it would not have been possible to make a positive determination on the evidence presented.''

This reconsidered final determination also concludes that the final determination improperly relied on the petitioner's members or ancestors living in Bay Center, combined with the petitioner's claims and acknowledgment activities, to find that the petitioner as a whole met the requirement of community, criterion (b). With respect to Chinook claims organizations and their activities between 1920 and 1970, this reconsidered final determination concludes that the final determination incorrectly relied on them as sufficient evidence for satisfying criteria (b) and (c) under both the 1978 or 1994 regulations. This reconsidered final determination also clarifies and restates the Department's position that there is no presumption of continuous existence and that the evidentiary benefits afforded to previously acknowledged petitioners are already incorporated in the regulations. The evidence under criteria (a), (b), and (c) is evaluated below in the context of these conclusions on these referred issues.

The 1994 regulations require an evaluation of whether the petitioner was a previously acknowledged tribe within the meaning of the regulations. Because the United States engaged in treaty negotiations with a Chinook tribal entity in 1851 and 1855, it has been determined that the petitioner meets the definition of unambiguous Federal acknowledgment in section 83.1 and is eligible to be evaluated under modified requirements provided in section 83.8 of the 1994 regulations, with 1855 as the date of last Federal acknowledgment. Conclusions concerning previous acknowledgment are solely for the purposes of a determination of previous acknowledgment under 25 CFR part 83, and are not intended to reflect conclusions concerning successorship in interest to a particular treaty or other rights.

Criterion 83.7(a) requires a demonstration of external identification of the petitioner as an Indian entity, from first sustained contact with non-Indians under the 1978 regulations or from the date of last Federal acknowledgment under sections 83.8(d)(1) or 83.8(d)(5) of the 1994 regulations. The proposed finding concluded that the petitioner did not meet criterion 83.7(a) under the 1978 regulations. The final determination concluded that the petitioner met the criterion under both the 1978 and 1994 regulations. Given the conclusions of the proposed finding that a historical Chinook tribe had been identified until 1873 and that several Chinook organizations had been identified since 1951, the petitioner needed to demonstrate that it was identified as an Indian entity by external observers on a substantially continuous basis between 1873 and 1951.

The petitioner did not provide new evidence of identifications of a Chinook Indian entity between 1873 and 1924. The petitioner provided examples to show that some of its ancestors were identified in 1925 and 1927, and again in 1951 and the following years, as a group or groups bringing claims on behalf of a historical Chinook tribe against the United States, but that evidence does not show that a Chinook entity was identified on a substantially continuous basis between 1927 and 1951. A few identifications during a three-year period of the three-quarters of a century between 1873 and 1951 does not constitute ''substantially continuous'' identification. The evidence is insufficient to show that the petitioner meets the requirements of this criterion between 1873 and 1951. Because the evidence in the record does not show that the petitioning group has been identified as an Indian entity ''from historical times until the present,'' or from last acknowledgment in 1855 until the present, on a ''substantially continuous'' basis, this reconsidered final determination concludes that the petitioner does not meet the requirements of criterion 83.7(a) either under the 1978 regulations or as modified by sections 83.8(d)(1) or 83.8(d)(5) under the 1994 regulations.

Criterion 83.7(b) in the 1978 regulations requires the petitioner to demonstrate that ''a substantial portion of the petitioning group inhabits a specific area or lives in a community viewed as American Indian and distinct from other populations in the area.'' The 1994 regulations similarly require that a ''predominant portion of the petitioning group comprises a distinct community.'' As modified by section 83.8(d)(2), a petitioner that has been previously acknowledged is required only to meet this criterion ''at present.'' ''Community'' is defined in the 1994 regulations, section 83.1, as ''any group of people which can demonstrate that consistent interactions and significant social relationships exist within its membership and that its members are differentiated from and identified as distinct from nonmembers.'' The proposed finding concluded that the petitioner did not meet criterion 83.7(b) under the 1978 regulations. The final determination concluded that the petitioner met the criterion under both the 1978 and 1994 regulations.

The final determination found that evidence submitted by the petitioner in response to the proposed finding was sufficient to show continuous significant social interaction between the Indians living in Bay Center and the Chinook descendants concentrated in Dahlia or Ilwaco between 1880 and 1950. The social interaction in the 1930's and 1940's appears to be based on relations that were established during earlier periods and to rest primarily in the older generation. As people who had been closely connected as children and young adults died, the succeeding generations interacted less often and intensely until the community of Chinook descendants became indistinguishable from the rest of the population. For the post-1950 time period, there is insufficient evidence regarding actual social interaction among a predominant portion of the petitioner's membership. Because the petitioner has not demonstrated that ''a substantial portion of the petitioning group'' has formed a community ''distinct from other populations in the area'' since 1950, nor that a ''predominant portion of the petitioning group comprises a distinct community'' at present, this reconsidered final determination concludes that the petitioner does not meet the requirements of criterion 83.7(b) either under the 1978 regulations or as modified by section 83.8(d)(2) under the 1994 regulations.

Criterion 83.7(c), in both the 1978 and 1994 regulations, requires the petitioner to demonstrate that it has maintained ''political influence'' or authority over its members as an autonomous entity throughout history. The definition of ''political influence or authority'' in section 83.1 of the 1994 regulations is ''a tribal council, leadership, internal process or other mechanism'' which the group has used to influence or control the behavior of its members in significant respects, or make decisions for the group which substantially affect its members, or represent the group in dealing with outsiders in matters of consequence. As modified by 83.8(d)(3), a petitioner that has been previously acknowledged is required to demonstrate that it meets the requirements of the criterion ''at present'' and, for the period between last Federal acknowledgment and the present, the petitioner must demonstrate that ''authoritative, knowledgeable external sources'' identified leaders or a governing body who exercised political influence or authority over the petitioning group, and also demonstrate one form of evidence listed in section 83.7(c). This reconsidered final determination concludes that the petitioner did not provide such

evidence. In this situation, the regulations provide, in section 83.8(d)(5), that the petitioner alternatively may demonstrate that it meets the requirements of criterion 83.7(c) from ''last Federal acknowledgment until the present.'' The proposed finding concluded that the petitioner did not meet criterion 83.7(c) under the 1978 regulations. The final determination concluded that the petitioner met the criterion under both the 1978 and 1994 regulations.

The record for this case lacks examples of an internal political process, either formal or informal, among the petitioner's ancestors, or of formal or informal political leadership or influence over the petitioner's ancestors as a group between 1855 and 1925. There is evidence of some leadership by George Charley during the late 1920's on behalf of a federally recognized tribe and a portion of the petitioner's ancestors at Bay Center, but not on behalf of the petitioner's ancestors along the Columbia River. There is also very limited evidence that a claims organization existed in the late 1920's and early 1930's, but no evidence that it had any internal political process which resulted in group decisions. There is almost no evidence of political activities or leadership between the early 1930's and 1951. There is evidence for the years between 1951 and 1970 that two organizations were active to pursue a claims case, but insufficient evidence that either organization had an internal decision-making process that embodied a bilateral political relationship between leaders and members which existed broadly among the membership. During the most recent decades the petitioner has had a formal political organization. The proposed finding concluded that there was ''very little information available about the internal political processes of the petitioner from 1970 to the present,'' and a lack of evidence that the organization was broadly based. The petitioner's new evidence does not change this conclusion. Because the available evidence does not include identifications of leaders or a governing body by ''authoritative, knowledgeable external sources,'' this reconsidered final determination concludes that the petitioner does not meet criterion 83.7(c) as modified by section 83.8(d)(3) under the 1994 regulations. Because the available evidence does not demonstrate that the petitioning group has exercised political influence over its members from historical times until the present, or from last acknowledgment in 1855 until the present, this reconsidered final determination concludes that the petitioner does not meet the requirements of criterion 83.7(c) either under the 1978 regulations or as modified by section 83.8(d)(5) under the 1994 regulations.

The available evidence demonstrates that the petitioner does not meet all seven criteria required for Federal acknowledgment. Specifically, the petitioner does not meet criteria 83.7 (a), (b), or (c) under the 1978 regulations, nor those three criteria under the 1994 regulations as modified by sections 83.8(d)(1), (d)(2), (d)(3), or (d)(5). The petitioner was found to meet criteria 83.7 (d), (e), (f), and (g) in the original final determination. Those criteria were not at issue in the referral by the Secretary. In accordance with the regulations set forth in 25 CFR 83.7 [1978] and 25 CFR 83.10(m) [1994], failure to meet any one of the seven criteria requires a determination that the group does not exist as an Indian tribe within the meaning of Federal law.

The final determination on whether or not the Chinook petitioner meets criteria (a), (b), and (c) is superceded by this reconsidered final determination. The **Federal Register** notice of the final determination published on Jan. 9, 2001 (66 FR 1690), is superceded by this notice. This reconsidered determination is final and effective upon publication.

Dated: July 5, 2002.

Neal A. McCaleb,

Assistant Secretary—Indian Affairs.

[FR Doc. 02–17551 Filed 7–10–02; 9:48 am]

BILLING CODE 4310–4J–P

DEPARTMENT OF THE INTERIOR

Bureau of Land Management

[NV–020–02–1990–EX]

Notice of Intent To Prepare a Supplemental Environmental Impact Statement To Analyze the Proposed Millennium Project Plan of Operations for Glamis Marigold Mining Company and Notice of Public Scoping and Public Meetings

AGENCY: Bureau of Land Management, Interior.

ACTION: Notice of Intent to Prepare a Supplemental Environmental Impact Statement to analyze the Proposed Millennium Project Plan of Operations for Glamis Marigold Mining Company (GMMC) and notice of public scoping and public meetings.

SUMMARY: Pursuant to section 102(2)(c) of the National Environmental Policy Act of 1969 (NEPA), 40 Code of Federal Regulations 1500–1508 Council on Environmental Quality Regulations, and 43 Code of Federal Regulations 3809, the Bureau of Land Management (BLM), Winnemucca Field Office will be directing the preparation of a third-party Supplemental Environmental Impact Statement (SEIS) to analyze a proposed new mine expansion called the Millennium project. The project would disturb approximately 1,394 acres of public and private lands and is located in Humboldt County, Nevada.

DATES: This notice initiates the public scoping process. Comments can be submitted in writing to the BLM, Winnemucca Field Office at the address listed below. All public meetings will be announced through the local news media and newsletters at least 15 days prior to the meetings.

Public Participation: The purpose of these public meetings is to identify potentially significant issues to be addressed in the SEIS, to determine the scope of issues to be addressed, to identify viable alternatives, and to encourage public participation in the NEPA process. Additional briefings will be considered, as appropriate. Comments, including names and street addresses of respondents, will be available for public review at the Winnemucca Field Office located in Winnemucca, Nevada, during regular business hours, and may be published as part of the SEIS. Individual respondents may request confidentiality. If you wish to withhold your name or street address from public review or from disclosure under the Freedom of Information Act, you must state this prominently at the beginning of your written comment. Such requests will be honored to the extent allowed by law. All submissions from organizations and businesses, and from individuals identifying themselves as representatives or officials of organizations or businesses, will be available for public inspection in their entirety.

ADDRESSES: Written comments should be addressed to the Bureau of Land Management, Winnemucca Office, Attention: Jeff Johnson, 5100 E. Winnemucca Blvd., Winnemucca, Nevada 89445.

FOR FURTHER INFORMATION CONTACT: Jeff Johnson, BLM Winnemucca at (775) 623–1500 or FAX # (775) 623–1503.

SUPPLEMENTARY INFORMATION: Since 1988 the Marigold Mine located approximately three miles south of Valmy, Nevada has been in commercial operation. The Marigold mine presently has mineral/development interests on approximately 19,000 acres of private

and public land. In September 2001, BLM issued a Record of Decision authorizing activities proposed in an environmental impact statement (EIS). Previous to the EIS, numerous mine plan modifications and the original mine plan approvals were authorized in various environmental assessments (EAs). Currently, the mine is approved to disturb 1,831 acres on private and public lands. In April 2002, GMMC submitted a plan of operations modification referred to as the Millennium Expansion Project. The Millennium Expansion Project would disturb an additional 1,394 acres and would include expansion of existing and construction of new pits, expansion of existing waste rock storage facilities and construction of new waste rock storage facilities, two new heap leach processing facilities to include solution ponds, carbon columns, reagent storage tanks, a new ADR facility, support facilities (truck shop, fuel storage, warehouse), ancillary facilities, and construction of an evapo-transpiration closure cover system for the heap leach facilities.

Dated: June 13, 2002.

Terry A. Reed,

Field Manager, Winnemucca Field Office.

[FR Doc. 02–17588 Filed 7–11–02; 8:45 am]

BILLING CODE 4310–HC–P

DEPARTMENT OF THE INTERIOR

Bureau of Land Management

[AZ–910–0777–26–241A]

Notice of Public Meeting, Arizona Resource Advisory Council Meeting

AGENCY: Bureau of Land Management, Interior.

ACTION: Notice of public meeting.

SUMMARY: In accordance with the Federal Land Policy and Management Act (FLPMA) and the Federal Advisory Committee Act of 1972 (FACA), the U.S. Department of the Interior, Bureau of Land Management (BLM) Arizona Resource Advisory Council (RAC), will meet as indicated below.

DATES: The meeting will be held August 1, 2002 at the BLM National Training Center, 9828 North 31st Avenue in Phoenix, Arizona, beginning at 9 a.m. The public comment period will begin at approximately 11:30 a.m., and the meeting will adjourn at approximately 4 p.m.

FOR FURTHER INFORMATION CONTACT: Deborah Stevens, Bureau of Land Management, Arizona State Office, 222 North Central Avenue, Phoenix, AZ, Telephone (602) 417–9215.

SUPPLEMENTARY INFORMATION: The 15-member Council advises the Secretary of the Interior, through the Bureau of Land Management, on a variety of planning and management issues associated with public land management in Arizona. At this meeting, topics we plan to discuss include: The agenda items to be covered include: review of the March 1, 2002 meeting minutes; BLM State Director's Update on legislation, regulations and statewide issues; Updates on the Proposed Las Cienegas Resource Management Plan and Final Environmental Impact Statement, Arizona Drought Strategy, and the Arizona In-Lieu Selection; Status of Arizona BLM Planning Starts and Discussion of establishing a RAC Planning Working Group; Update Proposed Field Office Rangeland Resource Teams; RAC Questions on Written Reports from BLM Field Office Managers; Reports by the Standards and Guidelines, Recreation and Public Relations, Wild Horse and Burro Working Groups; Reports from RAC members; and Discussion of future meetings.

All meetings are open to the public. The public may present written comments to the Council. Each formal Council meeting will also have time allocated for hearing public comments. Depending on the number of persons wishing to comment and time available, the time for individual oral comments may be limited. Individuals who plan to attend and need special assistance, such as sign language interpretation, tour transportation or other reasonable accommodations, should contact the BLM as provided below.

Dated: July 1, 2002.

Carl Rountree,

Arizona Associate State Director.

[FR Doc. 02–17481 Filed 7–11–02; 8:45 am]

BILLING CODE 4310–32–P

DEPARTMENT OF THE INTERIOR

Bureau of Land Management

[ES–020–1610–DO]

Notice of Intent To Prepare a Resource Management Plan for Alabama and Mississippi. Call for Coal Information and Invitation To Participate in Identification of Issues and Planning Criteria

AGENCY: Bureau of Land Management, Interior.

ACTION: Notice of Intent and Call for Coal Information.

SUMMARY: The Bureau of Land Management (BLM) field office in Jackson, Mississippi (Jackson Field Office) is initiating the preparation of a Resource Management Plan (RMP) for the states of Alabama and Mississippi (AL–MS).

This action will require the preparation of an Environmental Impact Statement (EIS). Planning will be conducted for lands (tracts) and minerals under the administration of the BLM. The RMP will establish land use management policy on approximately 2,080 acres of land in Alabama, 3,770 acres of land in Mississippi and 200,000 acres of BLM administered in Alabama and Mississippi fluid mineral rights (oil and gas).

This notice also solicits coal information (Call for Coal Information) for BLM-administered coal in Alabama and Mississippi. Coal companies, state and local governments, and the general public are encouraged to submit information to assist the BLM in determining coal development potential, and development conflicts with other resources. If it is determined that there is development potential, BLM staff will give further consideration to addressing coal leasing in the RMP. See **SUPPLEMENTARY INFORMATION** for the data requested in this Call for Coal Information.

DATES: Submit comments and coal information on or before September 10, 2002.

ADDRESSES: Send written comments and coal information to BLM, Jackson Field Office; RMP AL–MS; 411 Briarwood Dr., Ste. 404; Jackson, MS 39206. Submit electronic comments and coal information to *Elizabeth_Allison@blm.gov* (RMP Team Leader). See **SUPPLEMENTARY INFORMATION** for file formats and other information about electronic filing.

FOR FURTHER INFORMATION CONTACT: Elizabeth Allison, (601) 977–5413.

SUPPLEMENTARY INFORMATION: Planning will be conducted for lands (tracts) and minerals under the administration of the BLM. The tracts are located in more than 32 counties in Alabama and 19 counties in Mississippi. There are approximately 200,000 acres of BLM administered fluid mineral rights (oil and gas) under patented (private) lands in Alabama and Mississippi. BLM administered coal in these States may be addressed, if there are expressions of interest for future leasing and development.

Preliminary issues represent the BLM's knowledge, to date, on existing issues and concerns. The anticipated issues to be addressed in the RMP include, but are not limited to: (1) Public lands that could be transferred from BLM administration; (2) public lands that would be designated and managed as special management areas, and (3) BLM-administered fluid minerals that would be closed to leasing or designated as open to oil and gas development under (a) standard terms and conditions, (b) timing limitation (seasonal) constraints, (c) controlled surface use constraints, or (d) no surface occupancy constraints.

These issues are not final and may be refined by public input (comments). Issues proposed by the public will be reviewed by BLM. Determinations will be made as to whether they (1) will be addressed in the RMP or (2) are outside the scope of the RMP.

Preliminary planning criteria developed to guide the preparation of this RMP are listed below. These criteria may be refined by public input (comment).

1. Land use planning and environmental analysis will be conducted in accordance with laws, regulations, executive orders and manuals. Planning will be conducted for lands (tracts) and minerals under the administration of the BLM.

2. Surface tracts will be mapped and identified by legal description. Land use policy will be established for BLM-administered lands identified after the RMP is completed.

3. A reasonably foreseeable development scenario (RFDS) will be prepared for the future leasing (and development) of fluid minerals under split-estate lands (i.e., non-BLM surface and BLM minerals). The RFDS will be developed on a regional (county) basis. Areas of high, moderate and low oil and gas potential will be identified (mapped) for each state.

4. Areas with the potential for non energy solid mineral leasing (i.e., phosphates, sodium, etc.) will be evaluated for inclusion in the RMP.

5. Resource data needed to evaluate the impacts of future (foreseeable) mineral development will be collected on a regional basis.

6. The planning team will work cooperatively with (1) federal, state, county and local governments and agencies; (b) tribal governments; (c) groups and organizations; and (d) individuals.

An interdisciplinary team approach will be used to address resource issues in this RMP. The preliminary list of resource programs that will be addressed includes archeology, lands and realty, geology and minerals, outdoor recreation, socioeconomic, soils, water, and wildlife. A RFDS will be developed for BLM-administered fluid minerals and used in the preparation of the RMP and EIS.

This notice initiates the National Environmental Policy Act (NEPA) public scoping process. The BLM will work collaboratively with interested parties to identify the management decisions that are best suited to national, regional and local needs and concerns. The public is invited to participate in this planning process, beginning with the identification of issues and planning criteria for the RMP. Comments relating to the preliminary issues and planning criteria (listed above) can be submitted in writing to the address listed above.

This planning process will emphasize localized one-to-one contacts, media coverage, direct mailings and continual coordination and collaboration. Meetings will be conducted to (1) determine the scope of the RMP, and (2) obtain input on issues and planning criteria. All public meetings will be announced through the local news media and BLM's Web site (*www.es.blm.gov*) at least 15 days prior to the event.

Individuals who submit comments may request confidentiality. If you wish to withhold your name or street address from public review or from disclosure under the Freedom of Information Act, you must state this prominently at the beginning of your written comment. Such requests will be honored to the extent allowed by law. All submissions from organizations and businesses and individuals identifying themselves as representatives or officials of organizations or businesses, will be available for public review in their entirety.

You may submit comments and coal information by sending electronic mail (e-mail) to *Elizabeth_Allison@blm.gov* (RMP Team Leader).

Submit comments as an ASCII file avoiding the use of special characters and any form of encryption. The BLM also accepts comments and data on disks in WordPerfect 7 (and higher) and Word 97 (and higher) file formats or the ASCII file format. Identify all comments and data in electronic form by the docket number [PP 4F4327/R2253].

Information is needed to determine (1) The potential for coal development and (2) the development conflicts with other resources. Industry and other interested parties are asked to provide information required in Title 43 of the Code of Federal Regulations (CFR), subpart 3420.1–2 (43 CFR 3420.1–2). Information is needed for (1) the application of coal planning screens, and (2) possible activity planning (i.e., tract delineation, ranking and selection). Based on the information that's received, additional issues (coal leasing) could be addressed in the RMP.

Those issues would be based on:

1. Determining areas acceptable for further coal leasing consideration with standard stipulations.

2. Determining areas acceptable for further coal leasing consideration with special stipulations.

3. Determining areas unacceptable for further coal leasing consideration.

These determinations will be based on the data BLM receives. BLM staff will: (1) Assess coal development potential, (2) apply unsuitability criteria to proposed lease areas, (3) identify potential multiple use conflicts and (4) identify surface owner consultation needs.

The type of information needed includes, but is not limited to, the following:

1. Location:

a. Mining companies should include a narrative description and delineate areas on a map (scale of 1 inch to 2,000 feet) for areas they are interested in leasing.

b. Descriptions of both public and private industry coal users in the general region.

2. Quantity needs (tonnage, dates) for both public and private industry coal developers and users.

3. Quality needs (by type and grade) by end users of the coal.

4. Coal reserve drilling data which may pertain to the planning area.

5. Information pertaining to land and mineral ownership.

a. Surface owner consent previously granted, whether consent is transferrable, and surface owner leases with coal companies.

b. Non federal, or fee (private) coal ownership adjacent to federal tracts currently leased or mined.

6. Other resource values occurring within the planning area which may conflict with coal development:

a. Describe the resource value and locate it on a map (scale of 1 inch to 2,000 feet).

b. State the reasons the particular resource would be in conflict with coal development.

Any individual, business entity, or public body may participate in this process by providing coal or other resource information under this Call for Coal Information.

(Authority: 43 U. S. C. 1701 et al; 42 U. S. C. 4321.)

Dated: June 4, 2002.

Mike Nedd,

Eastern States Director.

[FR Doc. 02–17589 Filed 7–11–02; 8:45 am]

BILLING CODE 4310–GJ–P

DEPARTMENT OF THE INTERIOR

Minerals Management Service

Agency Information Collection Activities: Submitted for Office of Management and Budget (OMB) Review; Comment Request

AGENCY: Minerals Management Service (MMS), Interior.

ACTION: Notice of an extension of a currently approved information collection (OMB Control Number 1010–0073).

SUMMARY: To comply with the Paperwork Reduction Act (PRA) of 1995, we are submitting to OMB for review and approval an information collection request (ICR) titled ''30 CFR Part 220, Accounting Procedures for Determining Net Profit Share Payment for Outer Continental Shelf Oil and Gas Leases.'' We are also soliciting comments from the public on this ICR.

DATES: Submit written comments on or before August 12, 2002.

ADDRESSES: Submit written comments to the Office of Information and Regulatory Affairs, OMB, Attention: Desk Officer for the Department of the Interior (OMB Control Number 1010–0073), 725 17th Street, NW., Washington, DC 20503. Also, submit copies of your written comments to Carol Shelby, Regulatory Specialist, Minerals Management Service, Minerals Revenue Management, P.O. Box 25165, MS 320B2, Denver, Colorado 80225. If you use an overnight courier service, MMS's courier address is Building 85, Room A–614, Denver Federal Center, Denver, Colorado 80225. You may also submit your comments at our email address *mrm.comments@mms.gov.* Include the title of the information collection and the OMB control number in the ''Attention'' line of your comment. Also include your name and return address. Submit electronic comments as an ASCII file avoiding the use of special characters and any form of encryption. If you do not receive a confirmation that we have received your email, contact Ms. Shelby at (303) 231–3151 or FAX (303) 231–3385.

FOR FURTHER INFORMATION CONTACT: Carol Shelby, telephone (303) 231–3151, FAX (303) 231–3385, or email *Carol.Shelby@mms.gov.*

SUPPLEMENTARY INFORMATION: *Title:* 30 CFR Part 220, Accounting Procedures for Determining Net Profit Share Payment for Outer Continental Shelf Oil and Gas Leases.

OMB Control Number: 1010–0073.

Bureau Form Number: None.

Abstract: The Department of the Interior (DOI) is responsible for the management of all mineral leasing activities on Federal and Indian lands. The Federal Oil and Gas Royalty Management Act of 1982 (30 U.S.C. 1701 *et seq.*) requires the Secretary of the Interior to establish a comprehensive fiscal accounting, auditing, and collection system to accurately determine oil and gas royalties and other payments, and to collect and account for those monies in a timely manner. The Secretary delegated the authority for royalty management to MMS to develop a net profit share bidding system to encourage exploration and development of oil and gas leases on submerged lands of the Outer Continental Shelf (OCS). Section 8(a) of the OCS Lands Act, as amended (43 U.S.C. 1331 *et seq.*), authorizes DOI to implement alternative bidding systems for the award of Federal oil and gas leases on the OCS. The net profit share lease (NPSL) system endeavors to balance the securing of a fair market return to the Federal Government for the lease of its lands with a fair profit to companies risking their investment capital. The system provides an incentive for early and expeditious exploration and development and provides for a sharing of the risks by the lessee and the Government. The bidding system incorporates a fixed capital recovery system as the means through which the lessee recovers costs of exploration and development from production revenues, along with a reasonable return on investment.

The NPSL lessees are required to maintain an NPSL capital account and to provide either annual or monthly reports using data maintained in the capital account. In addition, NPSL lessees must file a report after each inventory of controllable material and following the cessation of production. Further, when nonoperators of an NPSL lease call for an audit, they must notify MMS, and when DOI calls for an audit, the lessee must notify all nonoperators on the lease. These requirements can be found in 30 CFR 220.010, 220.031, and 220.033.

The MMS is requesting an extension of OMB's approval to continue to collect this information. Submission of this information is required in order for MMS to determine when NPSL royalty payments are due and to determine the proper amount of payment. Proprietary information that is submitted is protected, and there are no questions of a sensitive nature included in this information collection.

Frequency: Annually before production; monthly after production.

Estimated Number and Description of Respondents: 12 OCS oil and gas lessees.

Estimated Annual Reporting and Recordkeeping ''Hour'' Burden: 3,674 hours. The following chart shows the breakdown of the burden hours by CFR section and paragraph:

Section	Reporting or record keeping requirement	Burden hours per response	Annual number of responses	Annual burden hours
220.010(a) 220.030(a)	For each NPSL tract, an NPSL capital account shall be established and maintained by the lessee for NPSL operations. Each lessee * * * shall establish and maintain such records as are necessary * * *.	1	22	22
220.031(a)	Each lessee * * * shall file an annual report during the period from issuance of the NPSL until the first month in which production revenues are credited to the NPSL capital account.	16	5	80

Section	Reporting or record keeping requirement	Burden hours per response	Annual number of responses	Annual burden hours
220.031(b)	Beginning with the first month in which production revenues are credited to the NPSL capital account, each lessee * * * shall file a report for each NPSL, not later than 60 days following the end of each month.	16	[1] 204	3,264
220.031(d)	Each lessee * * * shall file a report not later than 90 days after each inventory is taken * * *.	8	22	176
220.031(e)	Each lessee * * * shall file a final report, not later than 60 days following the cessation of production * * *.	2	22	44
220.033(b)(1)	When non-operators of an NPSL lease call an audit in accordance with the terms of their operating agreement, the Director shall be notified of the audit call * * *.	2	22	44
220.033(b)(2)	If DOI determines to call for an audit, DOI shall notify the lessee of its audit call and set a time and place for the audit * * * The lessee shall send copies of the notice to the non-operators on the lease.	2	22	44
Total			319	3,674

[1] 17 leases x 12 months.

Estimated Annual Reporting and Recordkeeping ''Non-hour Cost'' Burden: We have identified no ''non-hour'' cost burdens.

Comments: Section 3506(c)(2)(A) of the PRA (44 U.S.C. 3501 *et seq.*) requires each agency ''* * * to provide notice * * * and otherwise consult with members of the public and affected agencies concerning each proposed collection of information * * *.'' Agencies must specifically solicit comments to: (a) Evaluate whether the proposed collection of information is necessary for the agency to perform its duties, including whether the information is useful; (b) evaluate the accuracy of the agency's estimate of the burden of the proposed collection of information; (c) enhance the quality, usefulness, and clarity of the information to be collected; and (d) minimize the burden on the respondents, including the use of automated collection techniques or other forms of information technology.

To comply with the public consultation process, on February 19, 2002, we published a **Federal Register** notice (67 FR 7394) with the required 60-day comment period announcing that we would submit this ICR to OMB for approval. We did not receive any comments. We have posted a copy of the ICR at our Internet Web site *http://www.mrm.mms.gov/Laws_R_D/FRNotices/FRInfColl.htm.* We will also provide a copy of the ICR to you without charge upon request.

If you wish to comment in response to this notice, please send your comments directly to the offices listed under the **ADDRESSES** section of this notice. The OMB has up to 60 days to approve or disapprove the information collection but may respond after 30 days. Therefore, to ensure maximum consideration, OMB should receive your comments by August 12, 2002. The PRA provides that an agency may not conduct or sponsor, and a person is not required to respond to, a collection of information unless it displays a currently valid OMB control number.

Public Comment Policy. We will post all comments received in response to this notice on our Internet Web site at *http://www.mrm.mms.gov/Laws_R_D/InfoColl/InfoColCom.htm* for public review. We also make copies of the comments, including names and addresses of respondents, available for public review during regular business hours at our offices in Lakewood, Colorado.

Individual respondents may request that we withhold their home address from the public record, which we will honor to the extent allowable by law. There also may be circumstances in which we would withhold from the record a respondent's identity, as allowable by law. If you wish us to withhold your name and/or address, you must state this prominently at the beginning of your comment. However, we will not consider anonymous comments. We will make all submissions from organizations or businesses, and from individuals identifying themselves as representatives or officials of organizations or businesses, available for public inspection in their entirety.

MMS Information Collection Clearance Officer: Jo Ann Lauterbach, (202) 208–7744.

Dated: June 21, 2002.

Lucy Querques Denett,

Associate Director for Minerals Revenue Management.

[FR Doc. 02–17541 Filed 7–11–02; 8:45 am]

BILLING CODE 4310–MR–U

DEPARTMENT OF THE INTERIOR

Minerals Management Service

Agency Information Collection Activities: Submitted for Office of Management and Budget (OMB) Review; Comment Request

AGENCY: Minerals Management Service (MMS), Interior.

ACTION: Notice of extension of a currently approved information collection (OMB Control Number 1010–0068).

SUMMARY: To comply with the Paperwork Reduction Act of 1995 (PRA), we are notifying the public that we have submitted to OMB an information collection request (ICR) to renew approval of the paperwork requirements in the regulations under 30 CFR part 250, subpart M, Unitization, and related documents. This notice also provides the public a second opportunity to comment on the paperwork burden of these regulatory requirements.

DATES: Submit written comments by August 12, 2002.

ADDRESSES: You may submit comments directly to the Office of Information and Regulatory Affairs, OMB, Attention: Desk Officer for the Department of the Interior (1010–0068), 725 17th Street, NW., Washington, DC 20503. Mail or hand-carry a copy of your comments to the Department of the Interior; Minerals Management Service; Attention: Rules Processing Team; Mail Stop 4024; 381 Elden Street; Herndon, Virginia 20170–4817. If you wish to e-mail comments to MMS, the e-mail address is: *rules.comments@MMS.gov.* Reference Information Collection 1010–0068 in your e-mail subject line. Include your name and return address in your e-mail message and mark your message for return receipt.

FOR FURTHER INFORMATION CONTACT: Alexis London, Rules Processing Team, at (703) 787–1600. You may also contact Alexis London to obtain a copy at no cost of the regulations and model unitization agreements that require the subject collection of information.

SUPPLEMENTARY INFORMATION:

Title: 30 CFR 250, Subpart M, Unitization.

OMB Control Number: 1010–0068.

Abstract: The Outer Continental Shelf (OCS) Lands Act, as amended (43 U.S.C. 1331 *et seq.* and 43 U.S.C. 1801 *et seq.*), authorizes the Secretary of the Interior (Secretary) to prescribe rules and regulations to administer leasing of the OCS. Such rules and regulations will apply to all operations conducted under a lease. Operations on the OCS must preserve, protect and develop oil and natural gas resources in a manner which is consistent with the need to make such resources available to meet the Nation's energy needs as rapidly as possible; to balance orderly energy resource development with protection of human, marine, and coastal environments; to ensure the public a fair and equitable return on the resources of the OCS; and to preserve and maintain free enterprise competition. Section 1334(a) of the OCS Lands Act specifies that the Secretary prescribe rules and regulations ''to provide for the prevention of waste and conservation of the natural resources of the (O)uter Continental Shelf, and the protection of correlative rights therein'' and include provisions ''for unitization, pooling, and drilling agreements.'' To carry out these responsibilities, the Secretary has authorized MMS to issue orders and regulations governing offshore oil and gas lease operations.

This notice concerns the paperwork requirements of 30 CFR part 250, subpart M, Unitization, and related documents. Responses are mandatory or are required to obtain or retain a benefit. No questions of a ''sensitive'' nature are asked. MMS will protect proprietary information according to 30 CFR 250.196 (Data and information to be made available to the public), 30 CFR part 252 (OCS Oil and Gas Information Program), and the Freedom of Information Act (5 U.S.C. 552) and its implementing regulations (43 CFR part 2). MMS OCS Regions use the information to determine whether to approve a proposal to enter into an agreement to unitize operations under two or more leases or to approve modifications when circumstances change. The information is necessary to ensure that operations will result in preventing waste, conserving natural resources, and protecting correlative rights, including the Government's interests. We also use information submitted to determine competitiveness of a reservoir or to decide that compelling unitization will achieve these results.

Please note, 30 CFR 250.1303 states that ''MMS will maintain and provide a model unit agreement for you to follow.'' Upon a recent review of the two current models, it was noted that they specified submission of ''four copies'' of operator designations. In accordance with the Paperwork Reduction Act, we have determined that only ''two copies'' are necessary and have revised the models to reduce the copy requirements. Copies of the model unit agreements are posted at the MMS Web site: *http://www.gomr.mms.gov/homepg/pd/unitization.html.*

Frequency: The frequency of reporting is on occasion.

Estimated Number and Description of Respondents: Approximately 130 Federal OCS oil and gas or sulphur lessees.

Estimated Reporting and Recordkeeping ''Hour'' Burden: The estimated annual ''hour'' burden for this information collection is a total of 5,396 hours. The following chart details the individual components and estimated hour burdens. There are no recordkeeping requirements under 30 CFR part 250, subpart M. In calculating the burdens, we assumed that respondents perform certain requirements in the normal course of their activities. We consider these to be usual and customary and took that into account in estimating the burden.

BURDEN BREAKDOWN

Citation 30 CFR 250 subpart M	Reporting requirement	Burden per requirement	Average annual responses	Annual burden hours
1301	General description of requirements	Burden included in following sections.		0
1301(f)(3), (g)(1)	Request suspension of production or operations.	Burden covered in 1010–0114		0
1302(b)	Request preliminary determination on competitive reservoir.	36 hours	1 request	36
1302(b)	Submit concurrence or objection on competitiveness with supporting evidence.	36 hours	1 request	36
1302(c), (d)	Submit joint plan of operations or separate plan if agreement cannot be reached.	36 hours	1 plan	36
1303	Apply for voluntary unitization, including submitting unit agreement, unit operating agreement, initial plan of operation, and supporting data; request for variance from model agreement.	144 hours	14 applications/plans	2,016
1304(b)	Request compulsory unitization, including submitting unit agreement, unit operating agreement, initial plan of operation, and supporting data; serving non-consenting lessees with documents.	144 hours	1 request	144

BURDEN BREAKDOWN—Continued

Citation 30 CFR 250 subpart M	Reporting requirement	Burden per requirement	Average annual responses	Annual burden hours
1303; 1304	*Submit revisions or modifications to unit agreement, unit operating agreement, plan of operation, change of unit operator, etc.	6 hours	285 revisions/modifications.	1,710
1303; 1304	*Submit initial, and revisions to, participating area.	48 hours	24 submissions	1,152
1304(d)	Request hearing on required unitization	1 hour	1 request	1
1304(e)	Submit statement at hearing on compulsory unitization.	4 hours	1 statement	4
1304(e)	Submit three copies of verbatim transcript of hearing.	1 hour	1 submission	1
1304(f)	Appeal final order of compulsory under unitization.	Burden covered 1010–0121		0
1300–1304	General departure and alternative compliance requests not specifically covered elsewhere in subpart M regulations.	2 hours	130 requests	260
Total Hour Burden			460	5,396

*These requirements are specified in each Unit Agreement.

Estimated Reporting and Recordkeeping ''Non-Hour Cost'' Burden: Section 250.1304(d) provides an opportunity for parties notified of compulsory unitization to request a hearing. Section 250.1304(e) requires the party seeking the compulsory unitization to pay for the court reporter and three copies of the verbatim transcript of the hearing. It should be noted there have been no such hearings in the recent past, and none are expected in the near future. We estimate the paperwork cost burden would be less than $250.

Public Disclosure Statement: The PRA (44 U.S.C. 3501, *et seq.*) provides that an agency may not conduct or sponsor a collection of information unless it displays a currently valid OMB control number. Until OMB approves a collection of information, you are not obligated to respond.

Comments: Section 3506(c)(2)(A) of the PRA (44 U.S.C. 3501, *et seq.*) requires each agency ''* * * to provide notice * * * and otherwise consult with members of the public and affected agencies concerning each proposed collection of information * * *'' Agencies must specifically solicit comments to: (a) Evaluate whether the proposed collection of information is necessary for the agency to perform its duties, including whether the information is useful; (b) evaluate the accuracy of the agency's estimate of the burden of the proposed collection of information; (c) enhance the quality, usefulness, and clarity of the information to be collected; and (d) minimize the burden on the respondents, including the use of automated collection techniques or other forms of information technology.

To comply with the public consultation process, on March 28, 2002, we published a **Federal Register** notice (67 FR 14968) announcing that we would submit this ICR to OMB for approval. The notice provided the required 60-day comment period. In addition, 30 CFR 250.199 provides the OMB control numbers for the information collection requirements imposed by the regulations and forms. That regulation also informs the public that they may comment at any time on the collections of information and provides the address to which they should send comments. We have received no comments in response to these efforts.

If you wish to comment in response to this notice, you may send your comments to the offices listed under the **ADDRESSES** section of this notice. OMB has up to 60 days to approve or disapprove the information collection but may respond after 30 days. Therefore, to ensure maximum consideration, OMB should receive public comments by August 12, 2002.

Public Comment Policy: Our practice is to make comments, including names and home addresses of respondents, available for public review during regular business hours. Individual respondents may request that we withhold their home address from the record, which we will honor to the extent allowable by law. There may be circumstances in which we would withhold from the record a respondent's identity, as allowable by the law. If you wish us to withhold your name and/or address, you must state this prominently at the beginning of your comment. However, we will not consider anonymous comments. We will make all submissions from organizations or businesses, and from individuals identifying themselves as representatives or officials of organizations or businesses, available for public inspection in their entirety.

MMS Information Collection Clearance Officer: Jo Ann Lauterbach, (202) 208–7744.

Dated: June 7, 2002.

E.P. Danenberger,

Chief, Engineering and Operations Division.

[FR Doc. 02–17542 Filed 7–11–02; 8:45 am]

BILLING CODE 4310–MR–W

DEPARTMENT OF JUSTICE

Immigration and Naturalization Service

[INS No. 2221–02]

Meeting on Proposed Safe Third Country Agreement With Canada for Asylum Seekers

AGENCY: Immigration and Naturalization Service, Justice.

ACTION: Notice of meeting.

SUMMARY: The Immigration and Naturalization Service (Service) and the Department of State (DOS) are engaged in formal negotiations with the Canadian government to enter into an agreement that would limit the access of asylum seekers, under appropriate circumstances, to the system of only one of the two countries (safe third-country agreement). The purpose of this notice

is to announce that the Service and the DOS are holding a meeting to solicit views from the public concerning the terms of a proposed safe third-country agreement.

DATES AND TIMES: The meeting will be held on Thursday, August 1, 2002, from 1 p.m. to 4 p.m.

ADDRESSES: The meeting will be held at the Immigration and Naturalization Service Headquarters, 425 I Street, NW, Washington, DC, 20536, Shaughnessy Conference Room, Sixth Floor.

FOR FURTHER INFORMATION CONTACT: Georgia Papas, Office of International Affairs, Asylum Division, Immigration and Naturalization Service, 111 Massachusetts Avenue, NW, Washington, DC. 20536; telephone (202) 514–6029; fax (202) 305–0827; e-mail *Georgia.Papas@usdoj.gov.*

SUPPLEMENTARY INFORMATION:

What Is the Purpose of This Meeting?

The purpose of this meeting is to solicit the views of non-governmental organizations and other interested members of the public regarding the terms of a safe third-country agreement between the United States and Canada.

What Would Such an Agreement Do?

This agreement, when finalized, will limit asylum seekers' access, in certain circumstances, to the asylum system of the last of the two countries where they have been present.

What Legal Authority Permits the United States To Enter Into Such an Agreement?

The United States asylum laws contain provisions that make certain aliens ineligible to apply for asylum if they can be removed to a prescribed ''safe third country.'' Specifically, section 208(a)(1) of the Immigration and Nationality Act (Act) permits any alien who arrives in the United States to apply for asylum. However, section 208(a)(2)(A) provides that such an alien may not apply for asylum in the United States if the Attorney General determines that the person can be removed to a country pursuant to a bilateral or multilateral agreement (other than the country of the alien's nationality or, in the case of an alien having no nationality, the country of the alien's last habitual residence) where he or she would not face persecution and would have access to a full and fair procedure for determining a claim to asylum or equivalent temporary protection.

What Recent Governmental Actions Support Pursuing This Agreement?

On December 3, 2001, Attorney General John Ashcroft signed an accord with then Canadian Minister of Citizenship and Immigration, Elinor Caplan, and the Solicitor General, Lawrence MacAuley, agreeing ''to begin discussions on a safe third-country exception to the right to apply for asylum.'' The accord provided, ''Such an arrangement would limit the access of asylum seekers, under appropriate circumstances, to the system of only one of the two countries.'' Additionally, the Office of Homeland Security's Action Plan for Creating a Secure and Smart Border includes the negotiation of a safe third-country agreement as 1 of 30 shared initiatives between the United States and Canada.

Where Can the Public Obtain a Copy of the Proposed Agreement Prior to the August 1, 2002, Meeting?

Beginning on July 15, 2002, the public will be able to obtain a copy of the proposed agreement on the Service's Internet Web site at: *http://www.ins.usdoj.gov.*

What Is the Agenda for This Meeting?

There will be an overview of the terms of the draft agreement and an opportunity for public comment.

Who Can Attend This Meeting?

The meeting is open to the public, but advance notice of attendance is requested to ensure adequate seating and to arrange for appropriate clearance into the building. Persons planning to attend should notify the contact person at least 5 days prior to the meeting. Members of the public may submit written statements at any time before the meeting, or promptly afterward, to the contact person for consideration by the Service and the DOS.

Dated: July 5, 2002.

James W. Ziglar,

Commissioner, Immigration and Naturalization Service.

[FR Doc. 02–17609 Filed 7–9–02; 4:03 pm]

BILLING CODE 4410–10–U

DEPARTMENT OF JUSTICE

Parole Commission

Public Announcement; Pursuant to the Government in the Sunshine Act (Public Law 94–409) [5 U.S.C. Section 552b]

AGENCY: Department of Justice, United States Parole Commission.

TIME AND DATE: 9:30 a.m., Tuesday, July 16, 2002.

PLACE: 5550 Friendship Blvd., Fourth Floor, Chevy Chase, MD 20815.

STATUS: Open.

MATTERS TO BE CONSIDERED: The following matters have been placed on the agenda for the open Parole Commission meeting:

1. Approval of minutes of Previous Commission Meeting.
2. Reports from the Chairman, Commissioners, Legal, Chief of Staff, Case Operations, and Administrative Sections.
3. Proposal to adopt retroactive application of 28 CFR § 2.80.
4. Proposals to clarify and make corrections to the following rules: 28 CFR 2.75(a)(1) and (2); 28 CFR 2.80; 28 CFR 2.82(a); 28 CFR 2.86; 28 CFR 2.106(a), (b), and (d); 28 CFR 2.208(f) and 28 CFR 2.219.

AGENCY CONTACT: Sam Robertson, Case Operations, United States Parole Commission, (301) 492–5962.

Dated: July 9, 2002.

Michael Stover,

Deputy General Counsel, U.S. Parole Commission.

[FR Doc. 02–17624 Filed 7–10–02; 10:02 am]

BILLING CODE 4410–31–M

DEPARTMENT OF JUSTICE

Parole Commission

Public Announcement; Pursuant To The Government In the Sunshine Act (Public Law 94–409) [5 U.S.C. Section 552b]

AGENCY: Department of Justice, United States Parole Commission.

DATE AND TIME: 11:00 a.m., Tuesday, July 16, 2002.

PLACE: U.S. Parole Commission, 5550 Friendship Boulevard, 4th Floor, Chevy Chase, Maryland 20815.

STATUS: Closed—Meeting.

MATTERS CONSIDERED: The following matter will be considered during the closed portion of the Commission's Business Meeting: Appeals to the Commission involving approximately five cases decided by the National Commissioners pursuant to a reference under 28 CFR 2.27. These cases were originally heard by an examiner panel wherein inmates of Federal prisons have applied for parole and are contesting revocation of parole or mandatory release.

AGENCY CONTACT: Sam Robertson, Case Operations, United States Parole Commission, (301) 492–5962.

Dated: July 9, 2002.

Michael Stover,

Deputy General Counsel, U.S. Parole Commission.

[FR Doc. 02–17625 Filed 7–10–02; 10:02 am]

BILLING CODE 4410–31–M

DEPARTMENT OF LABOR

Employment and Training Administration

Proposed Collection; Comment Request

ACTION: Notice.

SUMMARY: The Department of Labor, as part of its continuing effort to reduce paperwork and respondent burden conducts a pre-clearance consultation program to provide the general public and Federal agencies with an opportunity to comment on proposed and/or continuing collections of information in accordance with the Paperwork Reduction Act of 1995 (PRA95) (44 U.S.C. 3506(c)(2)(A)). This program helps to ensure that requested data can be provided in the desired format, reporting burden (time and financial resources) is minimized, collection instruments are clearly understood, and the impact of collection requirements on respondents can be properly assessed. Currently, the Employment and Training Administration (ETA) is soliciting comments concerning the proposed two-year extension of the Employment Service Complaint Referral Record, ETA 8429, and the Services to Migrant and Seasonal Farm Workers Report, ETA 5148, from the current end date of September 30, 2002 to a new end date of September 30, 2004.

A copy of the previously approved information collection request (ICR) can be obtained by contacting the office listed below in the **ADDRESSES** section of this notice.

DATES: Written comments must be submitted to the office listed in the **ADDRESSES** section below on or before September 10, 2002.

ADDRESSES: Gay Gilbert, Office of Workforce Security, U.S. Employment Service/ALMIS, 200 Constitution Avenue, NW., Room S–4510, Washington, DC 20210, (202–693–3428—not a toll free number) and Internet address: *ggilbert@doleta.gov* and/or fax: 202–693–3015.

SUPPLEMENTARY INFORMATION:

I. Background

As part of the settlement in the case of *NAACP* v. *Secretary of Labor (Civil Action No. 2010–72, U.S.D.C.*), the U.S. Department of Labor (DOL) negotiated with the plaintiffs a series of regulations published June 10, 1980. Employment and Training Administration (ETA) regulations at 20 CFR 651, 653 and 658 under the Wagner-Peyser Act, as amended by the Workforce Investment Act of 1998, set forth the role and responsibilities of the United States Employment Service (USES) and the state workforce agencies (SWAs) regarding compliance of said regulations.

In compliance with 20 CFR 653.109, DOL established record keeping requirements to allow for the efficient and effective monitoring of SWAs regulatory compliance.

The ETA Form 8429, Employment Service Complaint Referral Record, is used to collect and document all individual complaints filed under the Employment Service complaint system.

The ETA Form 5148, Services to Migrant and Seasonal Farm Workers Report, is used to collect data which are primarily used to monitor and measure the extent and effectiveness of Employment Service (ES) services to migrant and seasonal farm workers as a high priority target group for ES services.

II. Review Focus

The Department of Labor is particularly interested in comments which:

- Evaluate whether the proposed collection of information is necessary for the proper performance of the functions of the agency, including whether the information will have practical utility;
- Evaluate the accuracy of the agency's estimate of the burden of the proposed collection of information, including the validity of the methodology and assumptions used;
- Enhance the quality, utility, and clarity of the information to be collected; and
- Minimize the burden of the collection of information on those who are to respond, including through the use of appropriate automated, electronic, mechanical, or other technological collection techniques or other forms of information technology, e.g., permitting electronic submissions of responses.

III. Current Actions

This is a request for OMB approval under the Paperwork Reduction Act of 1995 (PRA95) (44 U.S.C. 3506(c)(2)(A)) to extend collection of the Employment Service Complaint Referral Record, ETA 8429 and the Services to Migrant and Seasonal Farm Workers Report, ETA 5418, from a current end date of September 30, 2002 to a new end date of September 30, 2004.

Type of Review: Extension without change.

Record, ETA 8429 and the Services to Migrant and Seasonal Farm Workers Report, ETA 5418, from a current end date of September 30, 2002 to a new end date of September 30, 2004.

Type of Review: Extension without change.

Agency: Employment and Training Administration (ETA).

Title: Employment Service Complaint Referral Record, ETA 8429, Services to Migrant and Seasonal Farm Workers Report, ETA 5148.

OMB Number: 1205–0039.

Frequency: Quarterly and on occasion, respectively.

Affected Public: State governments.

Total Respondents: 208.

Estimated Burden Hours: 5,530.

Complaint Log Maintenance

1. Record Keeping

Number of record-keepers: 168.
Annual hours per record-keeper: 6.3.
Record-keeper hours: 1,059.

2. Processing ETA 8429

Annual number of forms: 2,520.
Minutes per form: 8.
Processing hours: 336.

Outreach Log

1. Record Keeping

Number of record-keepers: 150.
Annual hours per record-keeper: 26.
Record-keepers hours: 3,900.

2. Data Collection/Reporting ETA 5148

Annual number of reports: 208.
Minutes per report: 70.
Record keeping hours: 244.
Total Burden Cost (capital/startup): $0.
Total Burden Cost (operating/maintaining): $0.

Comments submitted in response to this comment request will be summarized and/or included in the request for Office of Management and Budget (OMB) approval of the information collection request; they will also become a matter of public record.

Dated: June 24, 2002.

Grace A. Kilbane,

Administrator, Office of Workforce Security.

[FR Doc. 02–17599 Filed 7–11–02; 8:45 am]

BILLING CODE 4510–30–M

DEPARTMENT OF LABOR

Employment Standards Administration

Wage and Hour Division: Minimum Wages for Federal and Federally Assisted Construction; General Wage Determination Decisions

General wage determination decisions of the Secretary of Labor are issued in accordance with applicable law and are based on the information obtained by the Department of Labor from its study of local wage conditions and data made available from other sources. They specify the basic hourly wage rates and fringe benefits which are determined to be prevailing for the described classes of laborers and mechanics employed on construction projects of a similar character and in the localities specified therein.

The determinations in these decisions of prevailing rates and fringe benefits have been made in accordance with 29 CFR part 1, by authority of the Secretary of Labor pursuant to the provisions of the Davis-Bacon Act of March 3, 1931, as amended (46 Stat. 1494, as amended, 40 U.S.C. 276a) and of other Federal statutes referred to in 29 CFR part 1, Appendix, as well as such additional statutes as may from time to time be enacted containing provisions for the payment of wages determined to be prevailing by the Secretary of Labor in accordance with the Davis-Bacon Act. The prevailing rates and fringe benefits determined in these decisions shall, in accordance with the provisions of the foregoing statutes, constitute the minimum wages payable on Federal and federally assisted construction projects to laborers and mechanics of the specified classes engaged on contract work of the character and in the localities described therein.

Good cause is hereby found for not utilizing notice and public comment procedure thereon prior to the issuance of these determinations as prescribed in 5 U.S.C. 553 and not providing for delay in the effective date as prescribed in that section, because the necessity to issue current construction industry wage determinations frequently and in large volume causes procedures to be impractical and contrary to the public interest.

General wage determination decisions, and modifications and supersedes decisions thereto, contain no expiration dates and are effective from their date of notice in the **Federal Register,** or on the date written notice is received by the agency, whichever is earlier. These decisions are to be used in accordance with the provisions of 29 CFR Parts 1 and 5. Accordingly, the applicable decision, together with any modifications issued, must be made a part of every contract for performance of the described work within the geographic area indicated as required by an applicable Federal prevailing wage law and 29 CFR Part 5. The wage rates and fringe benefits, notice of which is published herein, and which are contained in the Government Printing Office (GPO) document entitled ''General Wage Determinations Issued Under The Davis-Bacon And Related Acts,'' shall be the minimum paid by contractors and subcontractors to laborers and mechanics.

Any person, organization, or governmental agency having an interest in the rates determined as prevailing is encouraged to submit wage rate and fringe benefit information for consideration by the Department.

Further information and self-explanatory forms for the purpose of submitting this data may be obtained by writing to the U.S. Department of Labor, Employment Standards Administration, Wage and Hour Division, Division of Wage Determinations, 200 Constitution Avenue, NW., Room S–3014, Washington, DC 20210.

Modification to General Wage Determination Decisions

The number of the decisions listed to the Government Printing Office document entitled ''General Wage Determinations Issued Under the Davis-Bacon and Related Acts'' being modified are listed by Volume and State. Dates of publication in the **Federal Register** are in parentheses following the decisions being modified.

Volume I

New York
NY020002 (Mar. 01, 2002)
NY020003 (Mar. 01, 2002)
NY020004 (Mar. 01, 2002)
NY020005 (Mar. 01, 2002)
NY020006 (Mar. 01, 2002)
NY020007 (Mar. 01, 2002)
NY020008 (Mar. 01, 2002)
NY020009 (Mar. 01, 2002)
NY020010 (Mar. 01, 2002)
NY020011 (Mar. 01, 2002)
NY020012 (Mar. 01, 2002)
NY020013 (Mar. 01, 2002)
NY020014 (Mar. 01, 2002)
NY020015 (Mar. 01, 2002)
NY020016 (Mar. 01, 2002)
NY020017 (Mar. 01, 2002)
NY020018 (Mar. 01, 2002)
NY020019 (Mar. 01, 2002)
NY020020 (Mar. 01, 2002)
NY020021 (Mar. 01, 2002)
NY020022 (Mar. 01, 2002)
NY020025 (Mar. 01, 2002)
NY020026 (Mar. 01, 2002)
NY020029 (Mar. 01, 2002)
NY020031 (Mar. 01, 2002)
NY020032 (Mar. 01, 2002)
NY020033 (Mar. 01, 2002)
NY020034 (Mar. 01, 2002)
NY020036 (Mar. 01, 2002)
NY020037 (Mar. 01, 2002)
NY020038 (Mar. 01, 2002)
NY020039 (Mar. 01, 2002)
NY020040 (Mar. 01, 2002)
NY020041 (Mar. 01, 2002)
NY020042 (Mar. 01, 2002)
NY020043 (Mar. 01, 2002)
NY020044 (Mar. 01, 2002)
NY020045 (Mar. 01, 2002)
NY020046 (Mar. 01, 2002)
NY020047 (Mar. 01, 2002)
NY020048 (Mar. 01, 2002)
NY020049 (Mar. 01, 2002)
NY020050 (Mar. 01, 2002)
NY020051 (Mar. 01, 2002)
NY020058 (Mar. 01, 2002)
NY020060 (Mar. 01, 2002)
NY020066 (Mar. 01, 2002)
NY020067 (Mar. 01, 2002)
NY020071 (Mar. 01, 2002)
NY020072 (Mar. 01, 2002)
NY020074 (Mar. 01, 2002)
NY020076 (Mar. 01, 2002)
NY020077 (Mar. 01, 2002)

Volume II

District of Columbia
DC1020001 (Mar. 01, 2002)
DC1020003 (Mar. 01, 2002)
Pennsylvania
PA020001 (Mar. 01, 2002)
PA020002 (Mar. 01, 2002)
PA020003 (Mar. 01, 2002)
PA020004 (Mar. 01, 2002)
PA020005 (Mar. 01, 2002)
PA020006 (Mar. 01, 2002)
PA020007 (Mar. 01, 2002)
PA020008 (Mar. 01, 2002)
PA020009 (Mar. 01, 2002)
PA020010 (Mar. 01, 2002)
PA020014 (Mar. 01, 2002)
PA020016 (Mar. 01, 2002)
PA020018 (Mar. 01, 2002)
PA020019 (Mar. 01, 2002)
PA020021 (Mar. 01, 2002)
PA020023 (Mar. 01, 2002)
PA020024 (Mar. 01, 2002)
PA020025 (Mar. 01, 2002)
PA020026 (Mar. 01, 2002)
PA020028 (Mar. 01, 2002)
PA020030 (Mar. 01, 2002)
PA020031 (Mar. 01, 2002)
PA020040 (Mar. 01, 2002)
PA020042 (Mar. 01, 2002)
PA020052 (Mar. 01, 2002)
PA020059 (Mar. 01, 2002)
PA020060 (Mar. 01, 2002)
PA020061 (Mar. 01, 2002)
PA020065 (Mar. 01, 2002)
West Virginia
WV020001 (Mar. 01, 2002)
WV020002 (Mar. 01, 2002)

WV020003 (Mar. 01, 2002)
WV020006 (Mar. 01, 2002)
WV020009 (Mar. 01, 2002)
WV020010 (Mar. 01, 2002)
WV020011 (Mar. 01, 2002)

Volume III

TN020001 (Mar. 01, 2002)
TN020003 (Mar. 01, 2002)
TN020005 (Mar. 01, 2002)
TN020041 (Mar. 01, 2002)
TN020042 (Mar. 01, 2002)
TN020043 (Mar. 01, 2002)
TN020044 (Mar. 01, 2002)
TN020048 (Mar. 01, 2002)
TN020062 (Mar. 01, 2002)

Volume IV

Illinois
IL020001 (Mar. 1, 2002)
IL020008 (Mar. 1, 2002)
IL020009 (Mar. 1, 2002)
IL020011 (Mar. 1, 2002)
IL020013 (Mar. 1, 2002)
Michigan
MI020003 (Mar. 1, 2002)
MI020004 (Mar. 1, 2002)
MI020005 (Mar. 1, 2002)
MI020008 (Mar. 1, 2002)
MI020010 (Mar. 1, 2002)
MI020011 (Mar. 1, 2002)
MI020012 (Mar. 1, 2002)
MI020013 (Mar. 1, 2002)
MI020015 (Mar. 1, 2002)
MI020016 (Mar. 1, 2002)
MI020017 (Mar. 1, 2002)
MI020019 (Mar. 1, 2002)
MI020020 (Mar. 1, 2002)
MI020021 (Mar. 1, 2002)
MI020023 (Mar. 1, 2002)

Volume V

Iowa
IA020002 (Mar. 1, 2002)
IA020003 (Mar. 1, 2002)
IA020004 (Mar. 1, 2002)
IA020005 (Mar. 1, 2002)
IA020006 (Mar. 1, 2002)
IA020007 (Mar. 1, 2002)
IA020008 (Mar. 1, 2002)
IA020009 (Mar. 1, 2002)
IA020010 (Mar. 1, 2002)
IA020012 (Mar. 1, 2002)
IA020013 (Mar. 1, 2002)
IA020014 (Mar. 1, 2002)
IA020019 (Mar. 1, 2002)
IA020020 (Mar. 1, 2002)
IA020025 (Mar. 1, 2002)
IA020028 (Mar. 1, 2002)
IA020029 (Mar. 1, 2002)
IA020031 (Mar. 1, 2002)
IA020032 (Mar. 1, 2002)
IA020038 (Mar. 1, 2002)
IA020054 (Mar. 1, 2002)
IA020056 (Mar. 1, 2002)
IA020059 (Mar. 1, 2002)
IA020060 (Mar. 1, 2002)
IA020067 (Mar. 1, 2002)
Louisiana
LA020001 (Mar. 1, 2002)
LA020005 (Mar. 1, 2002)
LA020009 (Mar. 1, 2002)
LA020016 (Mar. 1, 2002)
LA020018 (Mar. 1, 2002)
LA020045 (Mar. 1, 2002)
LA020054 (Mar. 1, 2002)
Missouri
MO020010 (Mar. 1, 2002)
MO020011 (Mar. 1, 2002)
MO020013 (Mar. 1, 2002)

Volume VI

Alaska
AK020001 (Mar. 1, 2002)
AK020002 (Mar. 1, 2002)
AK020006 (Mar. 1, 2002)
AK020008 (Mar. 1, 2002)
South Dakota
SD020002 (Mar. 1, 2002)
Washington
WA020002 (Mar. 1, 2002)
WA020003 (Mar. 1, 2002)
WA020005 (Mar. 1, 2002)
WA020007 (Mar. 1, 2002)
WA020008 (Mar. 1, 2002)
WA020011 (Mar. 1, 2002)
WA020013 (Mar. 1, 2002)
WA020025 (Mar. 1, 2002)
WA020027 (Mar. 1, 2002)

Volume VII

Nevada
NV020003 (Mar. 1, 2002)
NV020004 (Mar. 1, 2002)
NV010005 (Mar. 1, 2002)
NV020007 (Mar. 1, 2002)
NV020009 (Mar. 1, 2002)

General Wage Determination Publication

General wage determinations issued under the Davis-Bacon and related Acts, including those noted above, may be found in the Government Printing Office (GPO) document entitled ''General Wage Determinations Issued Under the Davis-Bacon And Related Acts''. This publication is available at each of the 50 Regional Government Depository Libraries and many of the 1,400 Government Depository Libraries across the country.

General wage determinations issued under the Davis-Bacon and related Act are available electronically at no cost on the Government Printing Office site at *www.access.gpo.gov/davisbacon.* They are also available electronically by subscription to the Davis-Bacon Online Service (*http://davisbacon.fedworld.gov) of* the National Technical Information Service (NTIS) of the U.S. Department of Commerce at 1–800–363–2068. This subscription offers value-added features such as electronic delivery of modified wage decisions directly to the user's desktop, the ability to access prior wage decisions issued during the year, extensive Help desk Support, etc.

Hard-copy subscriptions may be purchased from: Superintendent of Documents, U.S. Government Printing Office, Washington, DC 20402, (202) 512–1800.

When ordering hard-copy subscription(s), be sure to specify the State(s) of interest, since subscriptions may be ordered for any or all of the six separate Volumes, arranged by State. Subscriptions include an annual edition (issued in January or February) which includes all current general wage determinations for the States covered by each volume. Throughout the remainder of the year, regular weekly updates will be distributed to subscribers.

Signed at Washington, DC this 3rd day of July 2002.

Carl J. Poleskey,

Chief, Branch of Construction Wage Determinations.

[FR Doc. 02–17319 Filed 7–11–02; 8:45 am]

BILLING CODE 4510–27–M

NATIONAL AERONAUTICS AND SPACE ADMINISTRATION

[Notice (02–086)]

NASA Advisory Council, Space Science Advisory Committee, Education and Public Outreach Task Force; Meeting

AGENCY: National Aeronautics and Space Administration (NASA).

ACTION: Notice of meeting.

SUMMARY: In accordance with the Federal Advisory Committee Act, Public Law 92–463, as amended, the National Aeronautics and Space Administration announces a forthcoming meeting of the NASA Advisory Council (NAC), Space Science Advisory Committee (SScAC), Education and Public Outreach (E/PO) Task Force.

DATES: Wednesday, August 7, 2002, 9 a.m. to 5:30 p.m., Thursday, August 8, 2002, 9 a.m. to 5:30 p.m., and Friday, August 9, 2002, 9 a.m. to 3 p.m.

ADDRESSES: Marriott Metro Center Hotel, located at 775 12th Street, NW., Washington, DC.

FOR FURTHER INFORMATION CONTACT: Dr. Jeffrey D. Rosendhal, Code S, National Aeronautics and Space Administration, Washington, DC 20546, (202) 358–2470.

SUPPLEMENTARY INFORMATION: The meeting will be open to the public up to the capacity of the room. The agenda for the meeting includes the following topics:

—Panel Discussion with Mission E/PO Leads

—Panel Discussion with OSS Discipline Scientists and Program Executives
—Preliminary Results from the Lesley University Phase III Evaluation Study
—Discussion/Formulation of Task Force Findings and Recommendations
—Writing Assignments
—Schedule of Activities for Completing the Task Force Study

It is imperative that the meeting be held on these dates to accommodate the scheduling priorities of the key participants. Visitors will be requested to sign a visitor's register.

Dated: July 9, 2002.

Sylvia K. Kraemer,

Advisory Committee Management Officer, National Aeronautics and Space Administration.

[FR Doc. 02–17547 Filed 7–11–02; 8:45 am]

BILLING CODE 7510–01–P

NATIONAL AERONAUTICS AND SPACE ADMINISTRATION

[Notice (02–087)]

NASA Advisory Council, Space Science Advisory Committee; Meeting

AGENCY: National Aeronautics and Space Administration (NASA).

ACTION: Notice of meeting.

SUMMARY: In accordance with the Federal Advisory Committee Act, Public Law 92–463, as amended, the National Aeronautics and Space Administration announces a forthcoming meeting of the NASA Advisory Council (NAC), Space Science Advisory Committee (SScAC).

DATES: Monday, August 5, 2002, 8:30 a.m. to 5:30 p.m., Tuesday, August 6, 2002, 8:30 a.m. to 5:30 p.m., and Wednesday, August 7, 2002, 8:30 a.m. to Noon.

ADDRESSES: NASA Headquarters, located at 300 E Street, SW., Washington, DC 20546, room 5H46 on August 5 and 6, and room 9H40 on August 7.

FOR FURTHER INFORMATION CONTACT: Ms. Marian R. Norris, Code SB, National Aeronautics and Space Administration, Washington, DC 20546, (202) 358–4452.

SUPPLEMENTARY INFORMATION: The meeting will be open to the public up to the capacity of the room. The agenda for the meeting includes the following topics:

—Associate Administrator's Report
—Division and Program Directors' Reports
—Subcommittee Roadmap Reports
—Reports on the National Research Council's Decadal Surveys for Solar System Exploration and Sun-Earth Connection
—Discussion of Science Program Outcomes for the FY02 Government Performance and Results Act Assessment
—Report on the Education and Public Outreach Task Force

It is imperative that the meeting be held on these dates to accommodate the scheduling priorities of the key participants. Any member of the public may file a written statement with the Committee; such statements should be provided to the contact above no later than five working days before the meeting. Visitors to the meeting will be requested to sign a visitor's register.

Dated: July 9, 2002.

Sylvia K. Kraemer,

Advisory Committee Management Officer, National Aeronautics and Space Administration.

[FR Doc. 02–17594 Filed 7–11–02; 8:45 am]

BILLING CODE 7510–01–P

NUCLEAR REGULATORY COMMISSION

Agency Information Collection Activities: Submission for the Office of Management and Budget (OMB) Review; Comment Request

AGENCY: Nuclear Regulatory Commission (NRC).

ACTION: Notice of the OMB review of information collection and solicitation of public comment.

SUMMARY: The NRC has recently submitted to OMB for review the following proposal for the collection of information under the provisions of the Paperwork Reduction Act of 1995 (44 U.S.C. Chapter 35). The NRC hereby informs potential respondents that an agency may not conduct or sponsor, and that a person is not required to respond to, a collection of information unless it displays a current valid OMB control number.

1. *Type of submission, new, revision, or extension:* Extension.

2. *The title of the information collection:* 10 CFR part 33—Specific Domestic Licenses of Broad Scope for Byproduct Material.

3. *The form number if applicable:* Not applicable.

4. *How often the collection is required:* There is a one-time submittal of information to receive a license. Once a specific license has been issued, there is a 10-year resubmittal of the information for renewal of the license.

5. *Who will be required or asked to report:* All applicants requesting a license of broad scope for byproduct material and all current licensees requesting renewal of a broad scope license.

6. *An estimate of the number of responses:* 1.

7. *The estimated number of annual respondents:* 1.

8. *An estimate of the number of hours needed annually to complete the requirement or request:* 1.

9. *An indication of whether Section 3507(d), Pub. L. 104–13 applies:* Not applicable.

10. *Abstract:* 10 CFR part 33 contains mandatory requirements for the issuance of a broad scope license authorizing the use of byproduct material. The subparts cover specific requirements for obtaining a license of broad scope. These requirements include equipment, facilities, personnel, and procedures adequate to protect health and minimize danger to life or property.

A copy of the final supporting statement may be viewed free of charge at the NRC Public Document Room, One White Flint North, 11555 Rockville Pike, Room O–1 F23, Rockville, MD 20852. OMB clearance requests are available at the NRC World

Wide Web site: *http://www.nrc.gov/public-involve/doc-comment/OMB/index/html.* The document will be available on the NRC home page site for 60 days after the signature date of this notice.

Comments and questions should be directed to the OMB reviewer listed below by August 12, 2002. Comments received after this date will be considered if it is practical to do so, but assurance of consideration cannot be given to comments received after this date. Bryon Allen, Office of Information and Regulatory Affairs (3150–0015), NEOB–10202, Office of Management and Budget, Washington, DC 20503.

Comments can also be submitted by telephone at (202) 395–3087.

The NRC Clearance Officer is Brenda Jo. Shelton, 301–415–7233.

Dated at Rockville, Maryland, this 5th day of July, 2002.

For the Nuclear Regulatory Commission.

Beth St. Mary,

Acting NRC Clearance Officer, Office of the Chief Information Officer.

[FR Doc. 02–17515 Filed 7–11–02; 8:45 am]

BILLING CODE 7590–01–P

UNITED STATES NUCLEAR REGULATORY COMMISSION

[Docket Nos. 50–237 and 50–249]

Exelon Generation Company, LLC; Dresden Nuclear Power Station, Units 2 and 3, Environmental Assessment and Finding of No Significant Impact

The U.S. Nuclear Regulatory Commission (NRC) is considering issuance of an exemption from Title 10 of the *Code of Federal Regulations* (10 CFR) part 55, section 55(c) for Facility Operating License Nos. DPR–19 and DPR–25, issued to Exelon Generation Company, LLC (the licensee), for operation of the Dresden Nuclear Power Station, Units 2 and 3 (Dresden), located in Morris, Illinois. Therefore, as required by 10 CFR 51.21, the NRC is issuing this environmental assessment and finding of no significant impact.

Environmental Assessment

Identification of the Proposed Action

The proposed action would exempt the licensee on a one-time-only basis from the two-year requirement of 10 CFR 55.59(c) for conducting a comprehensive licensed operator requalification written examination at Dresden.

The proposed action is in accordance with the licensee's application for exemption dated July 2, 2002, as supplemented by letter dated July 8, 2002.

The Need for the Proposed Action

The proposed action would extend the date for the licensee to complete the licensed operator requalification comprehensive written examinations at Dresden. The proposed action would extend the date for completing the examinations to August 2, 2002, (extending the examination schedule to 30 months rather than the 24 months required by 10 CFR 55.59(c)). The need for this proposed action arose due to the licensee erroneously scheduling the written examinations at an interval greater than the required 24 months.

Environmental Impacts of the Proposed Action

The NRC has completed its evaluation of the proposed action and concludes, as set forth below, that there are no significant environmental impacts associated with the extension of the operator requalification examinations to August 2, 2002.

The proposed action will not significantly increase the probability or consequences of accidents, no changes are being made in the types of effluents that may be released off site, and there is no significant increase in occupational or public radiation exposure. Therefore, there are no significant radiological environmental impacts associated with the proposed action.

With regard to potential nonradiological impacts, the proposed action does not have a potential to affect any historic sites. It does not affect nonradiological plant effluents and has no other environmental impact. Therefore, there are no significant nonradiological environmental impacts associated with the proposed action.

Accordingly, the NRC concludes that there are no significant environmental impacts associated with the proposed action.

Environmental Impacts of the Alternatives to the Proposed Action

As an alternative to the proposed action, the staff considered denial of the proposed action (i.e., the ''no-action'' alternative). Denial of the application would result in no change in current environmental impacts. The environmental impacts of the proposed action and the alternative action are similar.

Alternative Use of Resources:

The action does not involve the use of any different resources than those previously considered in the Final Environmental Statement for Dresden, dated November 1973.

Agencies and Persons Consulted

On July 8, 2002, the staff consulted with the Illinois State official, Frank Niziolek of the Illinois Department of Nuclear Safety, regarding the environmental impact of the proposed action. The State official had no comments.

Finding of No Significant Impact

On the basis of this environmental assessment, the NRC concludes that the proposed action will not have a significant effect on the quality of the human environment. Accordingly, the NRC has determined not to prepare an environmental impact statement for the proposed action.

For further details with respect to the proposed action, see the licensee's letter dated July 2, 2002, as supplemented by letter dated July 8, 2002. Documents may be examined, and/or copied for a fee, at the NRC's Public Document Room (PDR), located at One White Flint North, 11555 Rockville Pike (first floor), Rockville, Maryland. Publicly available records will be accessible electronically from the Agencywide Documents Access and Management System (ADAMS) Public Electronic Reading Room on the internet at the NRC Web site, *http://www.nrc.gov/reading-rm/adams.html.* Persons who do not have access to ADAMS or who encounter problems in accessing the documents located in ADAMS, should contact the NRC PDR Reference staff by telephone at 1–800–397–4209 or 301–415–4737, or by e-mail to *pdr@nrc.gov.*

For the Nuclear Regulatory Commission.

Dated at Rockville, Maryland, this 9th day of July, 2002.

Jon B. Hopkins,

Acting Chief, Section 2, Project Directorate III, Division of Licensing Project Management, Office of Nuclear Reactor Regulation.

[FR Doc. 02–17650 Filed 7–11–02; 8:45 am]

BILLING CODE 7590–01–P

OFFICE OF MANAGEMENT AND BUDGET

2002 List of Designated Federal Entities and Federal Entities

AGENCY: Office of Management and Budget.

ACTION: Notice.

SUMMARY: This notice provides a list of Designated Federal Entities and Federal Entities, as required by the Inspector General Act of 1978 (IG Act), as subsequently amended.

FOR FURTHER INFORMATION CONTACT: Tawana Webb at 202–395–7586, Office of Federal Financial Management, Office of Management and Budget.

SUPPLEMENTARY INFORMATION: This notice provides a copy of the 2002 List of Designated Federal Entities and Federal Entities, which the Office of Management and Budget (OMB) is required to publish annually under the IG Act. This list is also posted on the OMB Web site at *http://www.whitehouse.gov/financial.*

The list is divided into two groups: Designated Federal Entities and Federal Entities. The Designated Federal Entities are required to establish and maintain Offices of Inspector General. The Designated Federal Entities are listed in the IG Act, except that those agencies which have ceased to exist or have changed status have been deleted from the list.

Federal Entities are required to report annually to each House of the Congress and OMB on audit and investigative activities in their organizations. Federal Entities are defined as ''any Government corporation (within the meaning of section 103(1) of title 5, United States Code), any Government controlled

corporation (within the meaning of section 103(2) of such title), or any other entity in the Executive Branch of government, or any independent regulatory agency'' other than the Executive Office of the President and agencies with statutory Inspectors General. There are two deletions, four additions, and one name change to the 2002 list of Designated Federal Entities and Federal Entities from the 2001 list. America's Educational Goals Panel and the State Justice Institute were deleted from the Federal Entities list. The Commission on Ocean Policy (Pub. L. 106–553), National Veterans Business Development Corporation (Pub. L. 106–50), Pacific Charter Commission (Pub. L. 106–570), and Vietnam Education Foundation (Pub. L. 106–554) were added as Federal Entities, as a result of the Public Laws cited. The name of the U.S. Holocaust Memorial Museum was changed by Pub. L. 106–292.

The 2002 List of Designated Federal Entities and Federal Entities was prepared in consultation with the U. S. General Accounting Office.

Mark W. Everson,

Controller, Office of Federal Financial Management.

Herein follows the text of the 2002 List of Designated Federal Entities and Federal Entities:

2002 List of Designated Federal Entities and Federal Entities

The Inspector General Act of 1978, as subsequently amended, requires OMB to publish a list of ''Designated Federal Entities'' and ''Federal Entities'' and the heads of such entities. Designated Federal Entities were required to establish Offices of Inspector General. Federal Entities are required to report annually to each House of the Congress and the Office of Management and Budget on audit and investigative activities in their organizations.

Designated Federal Entities and Entity Heads

1. Amtrak—President
2. Appalachian Regional Commission—Federal Co-Chairperson
3. The Board of Governors, Federal Reserve System—Chairperson
4. Commodity Futures Trading Commission—Chairperson
5. Consumer Product Safety Commission—Chairperson
6. Corporation for Public Broadcasting—Board of Directors
7. Denali Commission—Chairperson
8. Equal Employment Opportunity Commission—Chairperson
9. Farm Credit Administration—Chairperson
10. Federal Communications Commission—Chairperson
11. Federal Election Commission—Chairperson
12. Federal Housing Finance Board—Chairperson
13. Federal Labor Relations Authority—Chairperson
14. Federal Maritime Commission—Chairperson
15. Federal Trade Commission—Chairperson
16. Legal Services Corporation—Board of Directors
17. National Archives and Records Administration—Archivist of the United States
18. National Credit Union Administration—Chairperson
19. National Endowment for the Arts—Chairperson
20. National Endowment for the Humanities—Chairperson
21. National Labor Relations Board—Chairperson
22. National Science Foundation—National Science Board
23. Peace Corps—Director
24. Pension Benefit Guaranty Corporation—Chairperson
25. Securities and Exchange Commission—Chairperson
26. Smithsonian Institution—Secretary
27. United States International Trade Commission—Chairperson
28. United States Postal Service—Governors of the Postal Service

Federal Entities and Entity Heads

1. Advisory Council on Historic Preservation—Chairperson
2. African Development Foundation—Chairperson
3. American Battle Monuments Commission—Chairperson
4. Architectural and Transportation Barriers Compliance Board—Chairperson
5. Armed Forces Retirement Home—Board of Directors
6. Barry Goldwater Scholarship and Excellence in Education Foundation—Chairperson
7. Chemical Safety and Hazard Investigation Board—Chairperson
8. Christopher Columbus Fellowship Foundation—Chairperson
9. Commission for the Preservation of America's Heritage Abroad—Chairperson
10. Commission of Fine Arts—Chairperson
11. Commission on Civil Rights—Chairperson
12. Commission on Ocean Policy—Chairperson
13. Committee for Purchase from People Who Are Blind or Severely Disabled—Chairperson
14. Court of Appeals for Veterans Claims—Chief Judge
15. Defense Nuclear Facilities Safety Board—Chairperson
16. Delta Regional Authority—Federal Co-Chairperson
17. Export-Import Bank—President and Chairperson
18. Farm Credit System Financial Assistance Corporation—Chairperson
19. Farm Credit System Insurance Corporation—Chairperson
20. Federal Financial Institutions Examination Council Appraisal Subcommittee—Chairperson
21. Federal Mediation and Conciliation Service—Director
22. Federal Mine Safety and Health Review Commission—Chairperson
23. Federal Retirement Thrift Investment Board—Executive Director
24. Harry S Truman Scholarship Foundation—Chairperson
25. Institute of American Indian and Alaska Native Culture and Arts Development—Chairperson
26. Institute of Museum and Library Services—Director
27. Inter-American Foundation—Chairperson
28. James Madison Memorial Fellowship Foundation—Chairperson
29. Japan-U.S. Friendship Commission—Chairperson
30. Marine Mammal Commission—Chairperson
31. Merit Systems Protection Board—Chairperson
32. Morris K. Udall Scholarship and Excellence in National Environmental Policy Foundation—Chairperson
33. National Capital Planning Commission—Chairperson
34. National Commission on Libraries and Information Science—Chairperson
35. National Council on Disability—Chairperson
36. National Mediation Board—Chairperson
37. National Transportation Safety Board—Chairperson
38. National Veterans Business Development Corporation—Chairperson
39. Neighborhood Reinvestment Corporation—Chairperson
40. Nuclear Waste Technical Review Board—Chairperson
41. Occupational Safety and Health Review Commission—Chairperson
42. Office of Government Ethics—Director
43. Office of Navajo and Hopi Indian Relocation—Chairperson

44. Office of Special Counsel—Special Counsel
45. Offices of Independent Counsel—Independent Counsels
46. Overseas Private Investment Corporation—Board of Directors
47. Pacific Charter Commission—Chairperson
48. Postal Rate Commission—Chairperson
49. Presidio Trust—Chairperson
50. Selective Service System—Director
51. Smithsonian Institution/John F. Kennedy Center for the Performing Arts—Chairperson
52. Smithsonian Institution/National Gallery of Art—President
53. Smithsonian Institution/Woodrow Wilson International Center for Scholars—Director
54. Trade and Development Agency—Director
55. U.S. Holocaust Memorial Museum—Chairperson
56. U.S. Institute of Peace—Chairperson
57. Vietnam Education Foundation—Chairperson

[FR Doc. 02–17497 Filed 7–11–02; 8:45 am]
BILLING CODE 3110–01–P

OFFICE OF PERSONNEL MANAGEMENT

Proposed Collection; Comment Request for Review of a New Information Collection RI 20–120

AGENCY: Office of Personnel Management (OPM).

ACTION: Notice.

SUMMARY: In accordance with the Paperwork Reduction Act of 1995 (Public Law 104–13, May 22, 1995), this notice announces that the Office of Personnel Management (OPM) intends to submit to the Office of Management and Budget (OMB) a request for review of a new information collection. RI 20–120, Request for Change to Unreduced Annuity, is a new form designed to collect information OPM needs to comply with the wishes of the retired Federal employee whose marriage has ended. We have always needed this information. In the past, we have considered the information originally provided in the correspondence from the retiree and have made further inquiries as needed. This new form will provide an organized way for the retiree to give us everything at one time.

Comments are particularly invited on:

—Whether this collection of information is necessary for the proper performance of functions of the Office of Personnel Management, and whether it will have practical utility;
—Whether our estimate of the public burden of this collection is accurate, and based on valid assumptions and methodology; and
—Ways in which we can minimize the burden of the collection of information on those who are to respond, through use of the appropriate technological collection techniques or other forms of information technology.

We estimate we will process 5,000 requests annually from RI 20–120. This form takes an average of 30 minutes per response to complete. The annual burden is estimated to be 2,500 hours.

For copies of this proposal, contact Mary Beth Smith-Toomey on (202) 606–8358, FAX (202) 418–3251 or E-mail to *mbtoomey@opm.gov.* Please include your mailing address with your request.

DATES: Comments on this proposal should be received within 60 calendar days from the date of this publication.

ADDRESSES: Send or deliver comments to Ronald W. Melton, Chief, Operations Support Division, Retirement and Insurance Service, U.S. Office of Personnel Management, 1900 E Street, NW., Room 3349A, Washington, DC 20415–3540.

For Information Regarding Administrative Coordination Contact: Cyrus Benson, Team Leader Desktop Publishing and Printing Team Budget and Administrative Services Division (202) 606–0623

U.S. Office of Personnel Management

Kay Coles James,

Director.

[FR Doc. 02–17406 Filed 7–11–02; 8:45 am]
BILLING CODE 6325–50–P

SECURITIES AND EXCHANGE COMMISSION

Sunshine Act Meetings

Notice is hereby given, pursuant to the provisions of the Government in the Sunshine Act, Pub. L. 94–409, that the Securities and Exchange Commission will hold the following meetings during the week of July 15, 2002:

Closed Meetings will be held on Tuesday, July 16, 2002, at 10 a.m., and Thursday, July 18, 2002, at 10 a.m., and an Open Meeting will be held on Wednesday, July 17, 2002, at 10 a.m., in Room 1C30, the William O. Douglas Room.

Commissioners, Counsel to the Commissioners, the Secretary to the Commission, and recording secretaries will attend the closed meeting. Certain staff members who have an interest in the matters may also be present.

The General Counsel of the Commission, or his designee, has certified that, in his opinion, one or more of the exemptions set forth in 5 U.S.C. 552b(c)(3), (5), (7), (9)(B), and (10) and 17 CFR 200.402(a)(3), (5), (7), (9)(ii) and (10), permit consideration of the scheduled matters at the closed meetings.

The subject matter of the Closed Meeting scheduled for Tuesday, July 16, 2002, will be:

Formal orders of investigation;
Institution and settlement of injunctive actions; and
Institution and settlement of administrative proceedings of an enforcement nature.

The subject matter of the Closed Meeting scheduled for Thursday, July 18, 2002, will be:

Formal orders of investigation;
Institution and settlement of injunctive actions;
Institution and settlement of administrative proceedings of an enforcement nature; and
Adjudicatory matter.

The subject matter of the Open Meeting scheduled for Wednesday, July 17, 2002, will be:

1. The Commission will consider whether to propose amendments to rule 206(4)–2, the custody rule under the Investment Advisers Act of 1940, to enhance the protections afforded to advisory clients' assets, harmonize the rule with current custodial practices, and clarify circumstances under which advisers have custody of client assets.
2. The Commission will consider whether to adopt amendments to rule 17a–8 under the Investment Company Act of 1940. The proposed amendments to rule 17a–8 would expand the types of business combinations permitted by the rule and make the rule available for mergers between registered investment companies and certain unregistered entities. The proposed amendments to rule 17a–8 are designed to reduce burdens on investment companies by permitting investment companies to enter into mergers that present little risk of overreaching without first obtaining an exemptive order from the Commission.
3. The Commission will consider whether to propose exemptions for most standardized options from provisions of the Securities Act of 1933 and from the registration requirements of the Securities Exchange Act of 1934. The proposals would ensure comparable regulatory treatment of standardized options and security futures products.
4. The Commission will consider whether to amend the Privacy Act System of Records for Enforcement Files (SEC–42) to clarify that disclosures may be made in connection with debt collection activities, including disclosures to credit reporting bureaus, to update statutory and regulatory references and addresses of system administrators, and to append a statement regarding previously published Privacy Act exemptions claimed for the system.

At times, changes in Commission priorities require alterations in the

scheduling of meeting items. For further information and to ascertain what, if any, matters have been added, deleted or postponed, please contact: The Office of the Secretary at (202) 942–7070.

Dated: July 9, 2002.

Margaret H. McFarland,

Deputy Secretary.

[FR Doc. 02–17610 Filed 7–9–02; 4:17 pm]

BILLING CODE 8010–01–M

OFFICE OF THE UNITED STATES TRADE REPRESENTATIVE

Exclusion of Particular Products from Actions under Section 203 of the Trade Act of 1974 With Regard to Certain Steel Products; Conforming Changes and Technical Corrections to the Harmonized Tariff Schedule of the United States

AGENCY: Office of the United States Trade Representative.

ACTION: Notice.

SUMMARY: Pursuant to authority granted to the United States Trade Representative (USTR) in Presidential Proclamation 7529 of March 5, 2002 (67 FR 10553), the USTR has found that particular products should be excluded from actions under section 203 of the Trade Act of 1974 (19 U.S.C. 2253) (Trade Act) with regard to certain steel products, and is modifying subchapter III of chapter 99 of the Harmonized Tariff Schedule of the United States (HTS) as set forth in the annex to this notice to implement these exclusions. Pursuant to authority delegated to the USTR in Presidential Proclamation 6969 of January 27, 1997 (62 FR 4415), USTR is making technical corrections to subchapter III of chapter 99 of the Harmonized Tariff Schedule of the United States (HTS) as set forth in the annex to this notice. These modifications correct several inadvertent errors and omissions in the subheadings 9903.72.30 through 9903.74.24 of the HTS so that the intended tariff treatment is provided.

EFFECTIVE DATE: The modifications and corrections made in this notice are effective with respect to articles entered, or withdrawn from warehouse for consumption, on or after the dates set forth in each item in the annex to this notice.

FOR FURTHER INFORMATION CONTACT: Office of Industry, Office of the United States Trade Representative, 600 17th Street NW., Room 501, Washington DC, 20508. Telephone (202) 395–5656.

SUPPLEMENTARY INFORMATION: On March 5, 2002, pursuant to section 203 of the Trade Act of 1974, as amended (the ''Trade Act'') (19 U.S.C. 2253), the President issued Proclamation 7529 (67 FR 10553), which imposed tariffs and a tariff-rate quota on (a) certain flat steel, consisting of: Slabs, plate, hot-rolled steel, cold-rolled steel, and coated steel; (b) hot-rolled bar; (c) cold-finished bar; (d) rebar; (e) certain tubular products; (f) carbon and alloy fittings; (g) stainless steel bar; (h) stainless steel rod; (i) tin mill products; and (j) stainless steel wire, as provided for in subheadings 9903.72.30 through 9903.74.24 of the Harmonized Tariff Schedule of the United States (''HTS'') (''safeguard measures'') for a period of three years plus 1 day. Effective with respect to goods entered, or withdrawn from warehouse for consumption, on or after 12:01 a.m., EST, on March 20, 2002, Proclamation 7529 modified subchapter III of chapter 99 of the HTS so as to provide for such increased duties and a tariff-rate quota.

Proclamation 7529 also delegated to the USTR the authority to consider requests for exclusion of a particular product submitted in accordance with the procedures set out in 66 FR 54321, 54322–54323 (October 26, 2001) and, upon publication in the **Federal Register** of a notice of his finding that a particular product should be excluded, to modify the HTS provision created by the annex to that proclamation to exclude such particular product from the pertinent safeguard measure. On April 5, 2002, USTR published a notice in the **Federal Register** excluding four particular products from the safeguard measures, and modified the HTS accordingly.

I have further considered exclusion requests for certain products designated as X–004, X–010, X–011, X–018, X–021, X–022, X–025, X–032, X–035, X–039, X–046, X–048, X–059, X–061, X–072, X–075, X–077, X–083, X–088, X–089, X–090, X–093, X–100, X–104, X–108, X–109, X–110, X–113, X–116, X–119, X–120, X–122, X–128, X–134, X–142, X–143, X–147, X–160, X–162, X–172, X–177, X–186, X–187, X–188, X–194, X–196, X–213, and X–219. I have also considered exclusion requests for certain products designated N–300, N–303, N–313, N–316, N–319, N–321, N–377, N–387, N–392, N–426, N–454, N–455, N–456, N–467, N–491, N–495, N–499. I find that the exclusion from the safeguard measures established in Proclamation 7529 of certain steel products within these designations, as described in sections 2 and 3 of the annex to this notice, would not undermine the goals of those safeguard measures. Therefore, I find that these products should be excluded from those safeguard measures. Accordingly, under authority vested in the USTR by Proclamation 7529, I modify the HTS provisions created by the annex to Proclamation 7529 as set forth in the annex to this notice. Such modifications shall be embodied in the HTS with respect to goods entered, or withdrawn from warehouse for consumption, on or after March 20, 2002.

On March 19, 2002 and June 4, 2002, USTR published **Federal Register** notices (67 FR 12635 and 67 FR 38541, respectively) making technical corrections to subchapter III of chapter 99 of the HTS to remedy several technical errors introduced in the annex to Proclamation 7529. These corrections ensured that the intended tariff treatment was provided. Since the publication of these **Federal Register** notices, additional technical errors and omissions in subchapter III of chapter 99 have come to the attention of USTR. The annex to this notice makes technical corrections to the HTS to remedy these errors and omissions. In particular, the annex to this notice corrects errors in the descriptions of the physical dimensions or chemical composition of certain products excluded from the application of the safeguard measures.

Proclamation 6969 authorized the USTR to exercise the authority provided to the President under section 604 of the Trade Act of 1974 (19 U.S.C. 2483) to embody rectifications, technical or conforming changes, or similar modifications in the HTS. Under authority vested in the USTR by Proclamation 6969, the rectifications, technical and conforming changes, and similar modifications set forth in the annex to this notice shall be embodied in the HTS with respect to goods entered, or withdrawn from warehouse for consumption, on or after the date set forth in each item in the annex to this notice.

Robert B. Zoellick,

United States Trade Representative.

Annex

The HTS is modified as set forth in this annex, with bracketed matter included to assist in the understanding of the modifications. The following provisions supersede matter now in the Harmonized Tariff Schedule of the United States (HTS). The new subheading and superior text thereto being inserted by this notice are set forth in columnar format, and material in such columns is inserted in the columns of the HTS designated ''Heading/Subheading'', ''Article Description'', ''Rates of Duty 1 General'', ''Rates of Duty 1 Special'', and ''Rates of Duty 2'', respectively. Individual subdivisions of U.S. note 11 to subchapter III

of chapter 99 of the HTS set forth herein specify that quantities of the named goods may enter under the terms of such subdivisions during periods beginning on July 12, 2002; and such subdivisions and the associated subheadings shall be effective with respect to the specified goods entered, or withdrawn from warehouse for consumption, on or after 12:01 a.m., EDT, on July 12, 2002; other provisions of this notice likewise specify that they are effective on or after 12:01 a.m., EDT, on July 12, 2002. The remaining provisions of this notice shall be effective with respect to articles entered, or withdrawn from warehouse for consumption, on or after 12:01 a.m., EST, on March 20, 2002:

1. In order to make corrections in subchapter III of chapter 99 of the HTS, the following modifications shall be made in U.S. note 11 to such subchapter:

A. Subdivision (b)(viii)(A) is modified by deleting ''0.245'' and by inserting in lieu thereof ''0.254''.

B. Subdivision (b)(xv), as modified by paragraph 9(E) of the notice published on June 4, 2002, is modified by inserting a comma after ''nickel of 0.40 percent maximum''.

C. In annex paragraph 9(N) of such notice, ''subdivision (b)(xxxii)(B)'' is modified to read ''subdivision (b)(xxxii)(C)''; and in subdivision (b)(xxxii)(C) the language ''(imported under subheading 7209.16.00, 7209.18.15, 7209.18.25 or 7209.17.00)'' is deleted;

D. Subdivision (b)(xxxv)(A) is modified by deleting all of the text starting with ''tin-nickel layer'' and by inserting in lieu thereof the following: ''tin-nickel layer of 1.0 micrometer or more; tin layer of 0.05 micrometer or more; nickel-graphite layer over 0.2 micrometer, and bottom side: nickel layer of 1.0 micrometer or more;''.

E. Subdivision (b)(xxxv)(B) is modified by deleting all of the text starting with ''tin-nickel layer'' and by inserting in lieu thereof the following: ''tin-nickel layer of 1.0 micrometer or more; nickel-graphite layer of 0.5 micrometer or more; bottom side: nickel layer of 1.0 micrometer or more;''.

F. Subdivision (b)(xxxv)(C) is modified by deleting all of the text starting with ''nickel-graphite layer'' and by inserting in lieu thereof the following: ''nickel-graphite layer of 1.0 micrometer or more; bottom side: nickel layer of 1.0 micrometer or more;''.

G. Subdivision (b)(xxxv)(D) is modified by deleting all of the text starting with ''nickel layer'' and by inserting in lieu thereof the following: ''nickel layer of 1.0 micrometer or more; nickel-phosphorus layer of 0.1 micrometer or more; bottom side: nickel layer of 1.0 micrometer or more;''.

H. Subdivision (b)(xxxv)(E) is modified by deleting all of the text starting with ''nickel-tin-nickel'' and by inserting in lieu thereof ''nickel-tin-nickel combination layer of 1.0 micrometer or more; tin layer only of 0.05 micrometer or more; bottom side: nickel layer of 1.0 micrometer or more;''.

I. Subdivision (b)(xlii) is modified by deleting all of the text starting with ''nickel-tin layer'' and by inserting in lieu thereof the following: ''nickel-tin layer of 1.0 micrometer or more; tin layer of 0.05 micrometer or more; bottom side: nickel layer of 1.0 micrometer or more; the foregoing designated as X–109;''.

J. In subdivision (liii), delete ''in coils,''.

K. Annex paragraph 9(U) of the notice of June 4, 2002, is modified to read as follows: ''In subdivision (b)(xlviii), ''457.2 mm'' is deleted and ''457.0 mm'' is inserted in lieu thereof;''.

L. Subheading 9903.73.45 is modified by deleting ''11(b)(xi)'' and by inserting in lieu thereof ''11(b)(xi)(A)'; and subheadings 9903.73.45 and 9903.73.46, as inserted by paragraph 10(D) of such notice, are redesignated as 9903.73.46 and 9903.73.47, respectively.

M. The superior text to subheadings 9903.73.42 through 9903.73.52 is modified by deleting ''with a height of 80 mm or more'' and by inserting ''with any linear dimension of 80 mm or greater when measured through a solid portion of the cross section''.

2. In order to provide that additional categories of goods related to existing exclusions are excluded from the actions taken in Presidential Proclamation 7529 and that needed clarifications are made, U.S. note 11(b) to subchapter III of chapter 99 of the HTS is further modified as follows:

A. Subdivision (b)(xi) is deleted and replaced by:

''(xi) Products designated as X–083, with the following characteristics:

(A) Products known as ''Superplast SP 300,'' the foregoing which are plates, pre-forged and rolled blocks or forged extra-heavy section blocks, with thickness of 152 and 1270 mm, inclusive, widths of 1990 mm, and lengths of 3048 to 3810 mm, inclusive; containing, by weight, carbon of between 0.235 and 0.265 percent, chromium of between 1.20 and 1.40 percent, manganese of between 1.20 and 1.40 percent, nickel of 0.30 percent maximum, molybdenum of between 0.35 and 0.45 percent, silicon of between 0.05 and 0.15 percent, boron of between 0.002 and 0.004 percent and sulphur of between 0.015 and 0.020 percent; with oxygen of 20 ppm (parts per million) and hydrogen of 2 ppm; if measuring between 152 and 203 mm displaying through hardness of 269 to 320 Brinnell, with a maximum dispersion of 15 bhn throughout; if measuring 203 and 1270 mm having through hardness of 290 to 320 Brinnell, with a maximum dispersion of 30 bhn throughout; all such products conforming to ultrasonic testing requirements of American Society of Testing and Materials (ASTM) A578-S9, with a 2 mm flat bottom hole, and homogenous product (free of hardspots) cleanliness guaranteed per ASTM E45 method A, worst field ratings A: 1.5 maximum, B: 1.5 maximum, C: 1.0 maximum and D: 1.5 maximum;

(B) Flat-rolled products imported in condition as specified in ASTM/ASME A353 (as rolled) or ASTM/ASME A553 (quenched and tempered), thickness of 4.75 mm or greater, minimum Charpy impact energies at −196° § C of 90 J (longitudinal) and 80 J (transverse), manufactured in compliance with the European material standard EN 10028-Part 4 and the required certification EN 10204 3.1.A; with chemical composition (percent by weight): carbon 0.13 maximum, manganese 0.90 to 0.98, phosphorus 0.015 maximum, sulfur 0.01 maximum, silicon 0.13 to 0.45 and nickel 8.40 to 9.60; or

(C) Flat-rolled products having a width not over 600 mm, not further worked than hot rolled, of a thickness of 4.75 mm or greater, containing by weight 24 percent or more of nickel with or without other elements and composed according to specification ASTM F15;''

B. Subdivision (b)(xx) is deleted and replaced by:

''(xx) Flat-rolled, hot-rolled products designated as X–116, as described below:

(A) Products not further processed than hot-rolled, of the grade known as ''ALFORM'' or ''ALFORM 890/900,'' of a thickness of not over 4.75 mm, whether in coils or in cut-to-length form (provided for in subheading 7225.30.70 or 7225.40.70);

(B) Products of grade SAE 8667, with chemical composition (percent by weight): carbon 0.61 to 0.72, chromium 0.20 to 0.35, manganese 0.30 to 0.50, molybdenum 0.08 to 0.15, nickel 0.20 to 0.35, phosphorus 0.025 maximum, sulfur 0.025 maximum and silicon 0.20 to 0.35; hot-rolled, pickled and oiled in coils; according to specification OCS–1; silicon-aluminum killed, without welds; fine austenitic grain; thickness: 2.26 mm or 3.18 mm or 4.36 mm, thickness tolerances ±0.090 mm; conicity measured at 40 mm from edge; thickness tolerances for remainder ±0.18 mm; and width of 1,028.7 mm to 1,033.55 mm;

(C) Grade SAE 8667, hot-rolled, pickled and oiled products in coils; silicon-aluminum killed, without welds, fine austenitic grain; thickness 2.29 mm, thickness tolerances ±0.090 mm; conicity measured at 40 mm from edge, 0.090 mm for 95 percent of coil length, thickness tolerances for remainder ±0.18 mm, width 1028.7 mm. −0.00 mm/+4.75 mm; with chemical composition (percent by weight): carbon 0.61 to 0.72, chromium 0.40 to 0.60, manganese 0.35 to 0.55, molybdenum 0.10 to 0.20, nickel 0.60 to 0.90, phosphorus 0.025 maximum, sulfur 0.025 and silicon 0.20 to 0.35; or

(D) Pickled and oiled products in coils, silicon-aluminum killed, grade 1050 mod. according to SAE J403–92; tolerances according to ASTM A568/91A, no welds, thickness tolerances ±0.13mm, thickness/width combinations: not over 1.98 mm/927.10 mm or not over 2.28 mm/1146 mm; with chemical composition (percent by weight): aluminum 0.02 to 0.07, carbon 0.51 to 0.55, chromium not over 0.05, manganese 0.78 to 0.90, phosphorus 0.012 maximum, sulfur 0.003 maximum and silicon 0.20 to 0.30; cleanliness: inclusions not to exceed 15,000 per Wallace Barnes (approximately 12 maximum Stringer Type per ASTM); free of primary and secondary pipe, lamination, seams, laps, rolled in scale, harmful segregation (¼ point) and other defects injurious to final product integrity;'

C. Subdivision (b)(xxiii) is deleted and replaced by:

''(xxiii) Hot-rolled flat-rolled products designated as X–142, meeting the following characteristics:

(A) Products known in industry usage as ''SCM 415,'' with chemical composition (percent by weight): carbon 0.13 to 0.18, silicon 0.15 to 0.35, manganese 0.60 to 0.85,

phosphorus not over 0.03, sulfur not over 0.03, chromium 0.90 to 1.20, molybdenum 0.15 to 0.30; hardness: HRB of not over 87; tensile strength of 500 N/mm2 or greater; elongation of 30 percent or more; yield ratio of not over 80 percent; thickness: 2.6 to 4.0 mm; width: 1066 mm to 1321 mm; and with edge: square cut edge free of burrs, rice marks, protrusions or damage;

(B) Products having widths greater than 914 mm, certified by the importer to have had ladle chemical analysis (percent by weight): carbon 0.56 to 0.64, manganese 0.75 to 1.00, nickel 0.40 to 0.70 and molybdenum 0.15 to 0.25; or

(C) Products meeting ASTM A506 (Modified UNS G41180), with chemical composition (percent by weight): manganese 0.60 to 0.90, chromium 0.55 to 0.75, silicon 0.30 to 0.45, copper 0.20, molybdenum 0.10 to 0.15, carbon 0.13 to 0.18, sulfur not over 0.005, phosphorus not over 0.025, niobium (columbium) 0.02 to 0.04, nickel not over 0.10; thickness of 1.55 mm or more but not over 3.76 mm; calcium refinement; half gauge tolerance ±0.115 mm; with coil size of 900 to 1,200 kg per cm width with no more than 10 percent of the coils between 600 and 900 kg per cm width;' D.Subdivision (b)(xxv) is deleted and the following new provisions are inserted in lieu thereof:

''(xxv) Cold-rolled products designated as X–010, as described below:

(A) Blue finish band saw steel meeting the following characteristics: Thickness not over 1.31 mm; width not over 80 mm; chemical composition (percent by weight): carbon 1.2 to 1.3, silicon 0.15 to 0.35, manganese 0.20 to 0.35, phosphorus not over 0.03, sulfur not over 0.007, chromium 0.30 to 0.5 and nickel not over 0.25; with the following other properties: carbides fully spheroidized, having greater than 80 percent of carbides, which are not over 0.003 mm and uniformly dispersed; surface finish is blue finish free from pits, scratches, rust, cracks, or seams; smooth edges; edge camber (in each 300 mm of length) of not over 7 mm arc height; and cross bow (per mm of width) of 0.015 mm maximum;

(B) Bright or blue finished band saw steel, if entered in an aggregate annual quantity not to exceed 250 t during the 12-month period beginning on July 12, 2002 or July 12, 2003 or during the period July 12, 2004 through March 20, 2005, inclusive, and meeting the following characteristics: cold-rolled, heat treated with fine spheroidized structure, edge machined, corner radius 45 degrees, controlled dish to 0.375 mm per 25.4 mm maximum; straightness 6.35 mm in 3,048 mm, supplied in coils of matched length and in sets; with chemical composition (percent by weight): carbon 0.70 to 0.80, silicon 0.10 to 0.30, manganese 0.60 to 0.85, chromium 0.20 to 0.30, sulfur 0.025 maximum and phosphorus 0.025 maximum; meeting ASTM E45 3.0/3.5 CT for cleanliness and with grain size 5 to 8 according to ASTM E112; thickness not over 1.25 mm and width not over 42 mm;

(C) Bandsaw steel, if entered in an aggregate annual quantity not to exceed 163 t during the 12-month period beginning on July 12, 2002 or July 12, 2003 or during the period July 12, 2004 through March 20, 2005, inclusive, the foregoing meeting the following characteristics: cold-rolled, with a fully spheroidized uniform pinpoint carbide structure in a ferrite matrix; cleanliness meeting ASTM E45 CT3.6 maximum; edges machined square and decornered; dish 0.025 mm maximum per 25.4 mm of width, straightness 6.35 mm in 3,048 mm, surface finish to be uniform through each coil, face to face and coil to coil, hardness 300–350 VPN; with chemical composition (percent by weight): carbon 0.65 to 0.74, silicon 0.20 to 0.35, manganese 0.30 to 0.50, sulfur 0.025 maximum, phosphorus 0.025 maximum, chromium 0.40 to 0.60, nickel 0.60 to 0.90 and molybdenum 0.08 to 0.15; thickness not over 1.1 mm and width not over 35 mm;

(D) Flat-rolled steel with the following characteristics: commercially designated as ''B82'', cold-rolled, hardened and tempered, leather polished (heavy grain), hardness HRC 38 to 54, finish to be consistent coil to coil and face to face; capable of passing tooth setting bend test without fracture; with chemical composition (percent by weight): carbon 0.70 to 0.80, manganese 0.65 to 0.85, sulfur 0.008 maximum and phosphorus 0.018 maximum; dish 0.025 mm maximum per 25.4 mm of width; cleanliness meeting ASTM E45M 3.5CT, grain size 5 to 8 ASTM E112, tempered martensite microstructure free from segregation or banding, after polishing the product may be naturally colored blue, bronze or gold, thickness not over 2.30 mm and width not over 375 mm; or

(E) Cold-rolled, flat-rolled steel, if entered in an aggregate annual quantity not to exceed 340 t during the 12-month period beginning on July 12, 2002 or July 12, 2003 or during the period July 12, 2004 through March 20, 2005, inclusive, and with the following characteristics: cleanliness meeting ASTM E45M 3.5CT; grain size 5 to 8 by ASTM E112; hardened and tempered within the range HRC 43 to 54; with chemical composition (percent by weight): carbon 0.98 to 1.05, manganese 0.30 to 0.50 and sulfur 0.015 maximum; dish 0.025 mm maximum per 25.4 mm of width; scaleless, heavy gauge leather polished or blue, whether or not edge machined; width of 150 mm or less and thickness of not over 2.35 mm;'

E. Subdivision (b)(xxxi) is deleted and the following new provisions are inserted:

''(xxxi) Cold-rolled flat-rolled steel designated as X–083, with the following characteristics:

(A) Products not further worked than cold-rolled, less than 4.75 mm in thickness; containing, by weight, at least 14 percent nickel or 25 percent cobalt, with or without other elements; controlled expansion alloys are composed according to specifications ASTM F15, ASTM F30, ASTM B753 ASTM F1684; magnetic alloys composed according to specifications ASTM A753 or ASTM A801; or

(B) Products of grade C1095/SAE1095, if entered in an aggregate annual quantity not to exceed 12,000 t during the 12-month period beginning on July 12, 2002 or July 12, 2003 or during the period July 12, 2004 through March 20, 2005, inclusive, and with chemical composition (percent by weight): carbon of 0.90 to 1.04, manganese 0.30 to 0.50, phosphorus 0.025 maximum, sulfur 0.015 maximum and silicon 0.15 to 0.25; thickness 0.254 mm to 2.324 mm; width 914.4 mm to 1320.8 mm; spheroidized annealed; thickness tolerance of half the ASTM A568 standard or less; and HRB hardness HRB 90 maximum;'

F. In subdivision (b)(xxxii) is modified by striking ''or'' at the end of subdivision (b)(xxxii)(C)(XV), by inserting ''or'' at the end of subdivision (b)(xxxii)(D), and the following new subdivision is inserted thereafter:

''(E) Products with thickness 1.07 mm or more but not over 3.05 mm, width 130 mm or more but not over 413 mm; with chemical composition (percent by weight): carbon 0.67 to 0.80, silicon 0.20 to 0.35, manganese 0.30 to 0.50, nickel 1.90 to 2.20, chromium 0.10 to 0.20, phosphorus not over 0.03, sulfur not over 0.015 and copper not over 0.15; flatness tolerance of ±0.001 mm per millimeter of product width; straightness of product (camber): short camber ±0.2997 mm over 1,016 mm, long camber: ±0.7620 mm over 3,048 mm; edge finish: square smooth edges free of burrs; surface finish: smooth surface of Ra 0.4–0.8 micrometer on both sides; hardened and tempered, bright finished random length coils; microstructure: evenly tempered martensitic structure free of carbide network; and no decarburization;'

G. (i) In subdivision (xxxiv)(C), the language ''width 12.6365 mm, polished surface, tensile strength 1,696 MPa—2,096 MPa'' is deleted and ''width 12.6365 mm plusmn;0.0508 mm, polished surface, tensile strength 1,560 MPa minimum'' is substituted in lieu thereof;

(ii) In subdivision (xxxiv), delete the final word ''or'' from subdivision (E) and insert the following new subdivisions in alphabetical sequence:

''(G) Flat-rolled products, Eberle 18, Eberle 18C (SAE1095 modified steel), thickness not over 1.0 mm; width not over 152.4 mm; with chemical composition (percent by weight): carbon 0.90 to 1.05, silicon 0.15 to 0.35,manganese 0.30 to 0.50, phosphorus 0.03 maximum and sulfur 0.006 maximum; mechanical properties: ultimate tensile strength at least 1590 N/mm2, hardness greater than or equal to 475 Vickers hardness; physical properties: flatness less than 0.2 percent of the product width; microstructure: completely free from decarburization, carbides are spheroidal and fine within 1 percent to 4 percent (area percentage) in the uniform termpered martensite; non-metallic inclusions: sulfide inclusions with area percentage not over 0.04, and oxide inclusions with area percentage not over 0.05; and surface roughness Ra 0.13 micrometer, Rmax 1.5 micrometers;

(H) Flat-rolled products, with chemical composition (percent by weight): carbon 0.98 to 1.05, silicon 0.15 to 0.30, manganese 0.4 to 0.6, sulfur 0.005 maximum, phosphorus 0.2 maximum, aluminum 0.01 maximum, chromium 0.15 to 0.4, copper 0.15 maximum and nickel 0.15 maximum; width 12.7 mm or more but not over 508 mm, thickness 0.1143 mm or more but not over 0.1422 mm, inclusive, thickness tolerance +/-0.005 mm, edges deburred; tensile strength 1000 to 1100 N/mm2; and hardened and tempered with hardness HV 580 to 650;

(I) Flat-rolled products, Eberle 18, Eberle 18C (SAE1095 modified steel), having a width not over 152.4 mm and thickness 0.254 mm to 0.889 mm; bright polished, unpolished or blue polished surface, surface roughness Rtmax 3.0 micrometer; ultimate tensile strength 1696 MPa +/-310 ksi; edges deburred or machined; with chemical composition (percent by weight): carbon 0.90 to 1.05, silicon 0.15 to 0.35, manganese 0.30 to 0.50, phosphorus 0.03 maximum and sulfur 0.006 maximum;

(J) Ski edge profiles, grade SAE 1070 or German grade X35CrMo17, the foregoing with chemical composition (percent by weight) for X35CrMo17 being carbon 0.33 to 0.45, silicon 1.0 maximum, manganese 1.50 maximum, phosphorus 0.04 maximum, sulfur 0.025 maximum, chromium 15.5 to 17.5, molybdenum 0.8 to 1.3 and nickel 1.0 maximum; hardened and tempered to 45 to 52 HRC; bright surface or primer coated and stamped according to drawing;

(K) Products described in industry usage as finally annealed electrical steel strip, the foregoing being flat-rolled silicon steel, coated with an insulating laquer modified according to customer's specification (C3/C5 type), low thickness deviation across the width (value for 0.50 mm thick material: maximum 0.02 mm, value for 0.65 mm thick material: maximum 0.03 mm); grade: finally annealed electrical steel product according to EN 10106 (specific grades: M530–50A, M530–65A with customer specified maximum core losses of 6.05 W/kg P 1.5 at 60 Hz and 5.80 W/kg P 1.5 at 60 Hz); finally annealed and coated; thickness 0.50 mm to 0.65 mm and width 1,250 mm maximum; or

(L) Products described in industry usage as doctor blade steel for the printing industry, with thickness 0.076 to 0.25 mm and width 70 mm maximum; straightness deviation 0.6 mm per 3000 mm; commercial grade UHB 20 C; with chemical composition (percent by weight): carbon 0.95 to 1.05, silicon 0.20 to 0.35, manganese 0.20 to 0.50, phosphorus 0.015 maximum and sulfur 0.010 maximum; with the end product having tight straightness, flatness and a fine dispersed microstructure of high purity, heat-treated;

(M) Hardened and tempered cold-rolled products, meeting AISI 1075; with thickness of 0.2 mm to 3.0 mm to meet Swedish T5 thickness tolerance; width of 622 mm to 1,016 mm; with chemical composition (percent by weight): carbon 0.70 to 0.80, silicon 0.15 to 0.30, manganese 0.50 to 0.7, phosphorus not over 0.020, sulfur not over 0.010, aluminum not over 0.020 and chromium 0.31 to 0.50;

(N) Products meeting AISI 1075, with thickness of 0.2 mm to 3.0 mm to meet Swedish T5 thickness tolerance; width of 622 mm to 1,016 mm; with chemical composition (percent by weight): carbon 0.97 to 1.03, silicon 0.15 to 0.30, manganese 0.40 to 0.50, phosphorus not over 0.020, sulfur not over 0.005, aluminum not over 0.020 and chromium 0.31 to 0.50;

(O) Products having a thickness of 0.5 mm to 3.5 mm and width of 50 mm to 650 mm; roughness: Ra (RMS) maximum 0.2 micrometer; with chemical composition (percent by weight): carbon 0.70 to 0.80, silicon 0.15 to 0.35, manganese 0.30 to 0.50, phosphorus not over 0.020, sulfur not over 0.010, aluminum not over 0.020, chromium 0.05 to 0.30 and nickel 1.90 to 2.20;''.

H. In subdivision (b)(xxxv), the word ''or'' is deleted at the end of (b)(xxxv)(D), ''or'' is inserted at the end of (b)(xxxv)(E), and the following new subdivision is inserted in alphabetical sequence:

''(F) Flat-rolled products, with unalloyed nickel plated coating measuring not over 5 microns per side with coating on one side at least 2 microns in thickness; with cold-rolled substrate known in industry usage as commercial grade battery grade sheet and having a thickness from 0.10 mm to 0.762 mm; the foregoing substrate with the following chemical composition (percent by weight): carbon not over 0.08, manganese not over 0.45, phosphorus not over 0.02, sulfur not over 0.02, aluminum not over 0.15 and silicon not over 0.10; with such substrate having the following mechanical specifications: tensile strength not to exceed 448 MPa, yield strength from 220 to 379 MPa, minimum elongation of 18 percent, Vickers hardness of 85 to 150, equiaxed or pancake with grain type size (ASTM) from 7 to 12 with delta r value ±0.2 and a lankford value greater than or equal to 1.2;''.

I. The word ''or'' is deleted at the end of subdivision (b)(xliv)(A), and the following new provisions are inserted in alphabetical sequence in subdivision (b)(xliv):

''(C) Single-reduced, tin-coated steel, entered in an aggregate annual quantity not to exceed 36,000 t during the 12-month period beginning on July 12, 2002 or July 12, 2003 or during the period July 12, 2004 through March 20, 2005, inclusive, the foregoing of a width of 1,138.2375 or more but not over 1,141.4125 mm; with thickness range of 0.260 mm to 0.270 mm (95 pound base box) or 0.267 mm to 0.278 mm (97 pound base box); 1.7/1.7 g/m\2\ tin coating, Type L, T3.5 CA, low chromium; or

(D) Electrolytically tin plated steel, entered in an aggregate annual quantity not to exceed 40,000 t during the 12-month period beginning on July 12, 2002 or July 12, 2003 or during the period July 12, 2004 through March 20, 2005, inclusive, the foregoing meeting one of the following ASTM specifications: A623, A623M, A624 or A624M and having the following additional properties: width either 1,071 mm or more but not over 1,074 mm or 1,202 mm or more but not over 1,205 mm; T4 temper; thickness of one or more of the following gauges: 0.280 mm, 0.300 mm, 0.315 mm, 0.325 mm or 0.355 mm; continuously annealed; standard shot blasted surface finish; chemistry of type L, oiled with acetyltributyl citrate (ATBC), tin plate coating weight of 2.2 g/m^2 for one side and 3.4 g/m^2 for the opposite side; matte finish; and utilizing clean steel practices;''

J. Subdivision (b)(l) is modified by deleting ''200,000 metric tons,'' and by inserting in lieu thereof ''200,000 t during the 12-month period beginning on March 20, 2002 or March 20, 2003 or during the period from March 20, 2004 through March 20, 2005, inclusive, under subheading 9903.72.75,''; and by deleting ''50,000 metric tons,'' and by inserting in lieu thereof ''50,000 t during the 12-month period beginning on March 20, 2002 or March 20, 2003 or during the period from March 20, 2004 through March 20, 2005, inclusive, under subheading 9903.72.76,''.

K. Effective with respect to goods entered, or withdrawn from warehouse for consumption, on or after July 12, 2002 and through the close of the period specified in U.S. note 11(a) to subchapter III of chapter 99, the superior text to subheadings 9903.73.88 through 9903.73.95 is modified by deleting '', other than fittings not machined, not tooled and not otherwise processed after forging''.

3. In order to provide that additional groups of products shall be excluded from the import relief, U.S. note 11(c) is modified by inserting immediately after the last sentence the following additional sentence and the subordinate paragraphs set forth herein:

''For purposes of this paragraph, the following goods shall be excluded from the application of relief under the subheadings referred to in paragraph (a) of this note:

(i) Cold-rolled, flat-rolled steel, designated as X–110, meeting the following characteristics:

(A) Grade 20C products, entered in an aggregate annual quantity not to exceed 45,000 t during the 12-month period beginning on July 12, 2002 or July 12, 2003 or during the period July 12, 2004 through March 20, 2005, inclusive, the foregoing hardened and tempered, with thickness 0.102 mm or more but not over 1.20 mm and width not over 355.6 mm; tensile strength from 1600 N/mm\2\ to 2100 N/mm\2\ with a tolerance ±80 N/mm\2\; hardness 480 to 615 HV; thickness tolerance of T3 if thickness not over 0.381 mm, T2 if thickness over 0.381 mm but not over 0.508 mm, and T1 if over 0.508 mm but not over 1.194 mm; and flatness tolerance of 0.20 percent of product width;

(B) Grade 20C products, entered in an aggregate annual quantity not to exceed 5,700 t during the 12-month period beginning on July 12, 2002 or July 12, 2003 or during the period July 12, 2004 through March 20, 2005, inclusive, the foregoing hardened and tempered, with thickness 0.102 mm or more but not over 0.635 mm; width 12.7 mm or more but not over 355.6 mm; tensile strength ranging 1750 N/ mm\2\ to 2100 N/mm\2\ with tolerance ±80 N/mm\2\; hardness 520 to 615 HV, thickness tolerance of T3, width tolerance of B1, flatness tolerance of 0.30 percent of product width, straightness tolerance of R2, minimal surface defects with a maximum depth of 5 micrometers, and maximum scratch depth of 2.0 micrometers;

(C) Steel known in industry usage as flapper valve steel, entered in an aggregate annual quantity not to exceed 17,500 t during the 12-month period beginning on July 12, 2002 or July 12, 2003 or during the period July 12, 2004 through March 20, 2005, inclusive, the foregoing hardened and tempered, surface polished; thickness not over 1.0 m;, width not over 355.6 mm; with chemical composition (percent by weight): carbon 0.90 or more but not over 1.05, silicon 0.15 or more but not over 0.35, manganese 0.30 or more but not over 0.50, phosphorus 0.03 maximum, sulfur 0.006 maximum,

tensile strength 162 kgf/mm\2\ minimum; hardness 475 minimum Vickers hardness number; flatness less than 0.2 percent of product width; microstructure: completely free from decarburization; carbides spheroidal and fine and within 1 percent to 4 percent (area percentage) in uniform tempered martensite; sulfide inclusions with area percentage not over 0.04 percent and oxide inclusion with area percentage not over 0.05 percent; compressive stress: 10 to 40 kgf/mm\2\; surface roughness specifications: if thickness is not over 0.209 mm, will have roughness (RZ) not over 0.5 micrometer; if thickness is over 0.209 mm but not over 0.310 mm, will have roughness (RZ) of not over 0.6 micrometer; if thickness is over 0.310 mm but not over 0.440 mm, will have roughness (RZ) of not over 0.7 micrometer; if thickness is over 0.440 mm but not over 0.560 mm, will have roughness (RZ) of not over 0.8 micrometer; if thickness if over 0.560 mm, will have roughness (RZ) of not over 1.0 micrometer; or

(D) Flat-rolled steel, with chemical composition (percent by weight): carbon 0.70 or more but not over 0.80, silicon 0.20 or more but not over 0.35, manganese 0.30 or more but not over 0.45, chromium 0.05 or more but not over 0.17, nickel 1.85 or more but not over 2.15, phosphorus 0.018 maximum, sulfur 0.005 maximum; hardened and tempered, bright and polished; thickness 0.60 mm or more but not over 3.05 mm; width 16.0 mm or more but not over 412.8 mm; tensile strength 1290 N/mm\2\ minimum; hardness 40 HRC minimum; with square and smooth edges; free from surface defects; thickness tolerance of T1 according to Swedish Standard 21 21 11 as in effect on March 20, 2002 and certified by the importer to meet such standard; and maximum unflatness of 0.10 percent of the product width;

(ii) Cold-rolled flat-rolled deep drawing enameling steel, designated as X–119, with the characteristics specified for ASTM A–424 Type 3, interstitial-free; with chemical composition (percent by weight): carbon 0.02 maximum, titanium 0.05 minimum, manganese 0.35 maximum, phosphorus 0.020 maximum, and sulfur 0.030 maximum; with surface roughness 2.29 to 3.07 micrometers; dry (no oil on surface); hardness 24–45 HRB;

(iii) Cold-rolled, flat-rolled steel, designated as X–122, meeting the characteristics described below:

(A) Dual phase steel products with dispersed martensitic islands in mainly ferrite matrix, thickness 0.60 mm to 1.75 mm; width 800 mm to 1600 mm; with chemical composition (percent by weight): carbon 0.06 to 0.14, silicon 0.20 maximum, manganese 1.0 to 2.0, phosphorus 0.04 maximum and sulfur 0.015 maximum; yield strength 340 to 410 MPa, tensile strength over 600 MPa and elongation over 20 percent; or

(B) Products with up to 50 percent martensite in ferrite matrix, thickness 0.80 mm to 1.60 mm; width 1,000 mm to 1,400 mm; with chemical composition (percent by weight): carbon 0.10 to 0.18, silicon 0.80 maximum, manganese 1.5 to 2.0, phosphorus 0.05 maximum, sulfur 0.03 maximum, aluminum 0.02 to 0.05, chromium 0.60 maximum, titanium 0.08 to 0.15; yield strength 600 to 760 MPa, tensile strength 800 MPa or more and elongation greater than 10 percent;

(iv) Alloy bar, not further worked than hot-rolled, designated as X–147, meeting the characteristics described below:

(A) ASTM grade 8620Te products, entered in an aggregate annual quantity not to exceed 2,100 t during the 12-month period beginning on July 12, 2002 or July 12, 2003 or during the period July 12, 2004 through March 20, 2005, inclusive, the foregoing certified by the importer as meeting the following characteristics: tellurium content to achieve a sulfide mean aspect ratio of 5:1 maximum; reduction ratio of 16:1 minimum, achieved through continuous bloom casting at 560 x 400 mm; fully surface inspected and certified by the producer to be free from defects deeper than 0.75 percent of bar diameter; certified as free from mixes, achieved by 100 percent spectrometer testing; or

(B) ASTM grade 5150Te products, certified to meet the following characteristics: tellurium content to achieve a sulfide mean aspect ratio of 5:1 maximum; reduction ratio of 16:1 minimum, achieved through continuous bloom casting at 560 x 400 mm; fully surface inspected and certified by the producer to be free from defects deeper than 0.75 percent of bar diameter; certified as free from mixes, achieved by 100 percent spectrometer testing;

(v) Hot-rolled flat-rolled steel, designated as X–025, in coils, with chemical composition (percent by weight): carbon 0.10 to 0.14, manganese 0.90 maximum, phosphorus 0.025 maximum, sulfur 0.002 maximum, silicon 0.30 to 0.50, chromium 0.50 to 0.70, copper 0.20 to 0.40 and nickel 0.20 maximum; width not over 1,138 mm, thickness 1.60 to 5.03 mm; minimum yield strength 344 N/mm^2; tensile strength of 482 to 607 N/mm^2; thickness tolerance according to half of ASTM 568 specification; minimum elongation 22 percent; hardness 79 to 89 HRB; pickled and oiled; surface condition free of injurious defects such as holes, breaks, scabs, scale, and embosses;

(vi) Hot-rolled flat-rolled steel designated as X–072, with characteristics described below:

(A) Products in coils, with chemical composition (percent by weight): carbon 0.90 to 1.30, manganese 0.425 to 0.575, phosphorus 0.020 maximum, sulfur 0.020 maximum, silicon 0.020 maximum, aluminum 0.025 to 0.060, nitrogen 0.0030 to 0.0050, copper 0.040 maximum, tin 0.010 maximum, chromium 0.040 maximum, nickel 0.040 maximum, molybdenum 0.010 maximum, niobium (columbium) 0.005 maximum, vanadium 0.005 maximum, boron 0.0005 maximum and titanium 0.005 maximum; minimum yield strength 248 MPa, minimum tensile strength 345 MPa, minimum elongation 30 percent in 50.8 mm; if pickled and oiled, in dimensions of: thickness of 2.79 mm (minus 0, plus 0.40 mm) and width over 1,879.6 mm; thickness of 3.81 (minus 0, plus 0.40 mm) and width 1,930.4 mm or more, thickness of 2.31 mm (minus 0, plus 0.40 mm) and width 1,936.75 mm or more; or if not pickled and oiled, in dimensions of: thickness of 2.79 mm (minus 0, plus 0.40 mm) and width over 1,879.6 mm, thickness of 3.81 (minus 0, plus 0.40 mm) and width over 1,943.1mm; thickness of 2.31 mm (minus 0, plus 0.40 mm) and width 1,936.75 mm or more;

(B) Products in coils, whether or not pickled & oiled, with chemical composition (percent by weight): carbon 0.015 to 0.030, manganese 0.140 to 0.200, phosphorus 0.017 maximum, sulfur 0.010 maximum, silicon 0.024 maximum, aluminum 0.040 to 0.080, nitrogen 0.0040 maximum, copper 0.040 maximum, tin 0.010 maximum, chromium 0.040 maximum, nickel 0.040 maximum, molybdenum 0.010 maximum, niobium (columbium) 0.005 maximum, vanadium 0.005 maximum, boron 0.0005 maximum and titanium 0.005 maximum; yield strength 170 to 210 MPa, tensile strength 300 to 325 MPa, minimum elongation 40 percent in 50.8 mm; thickness 2.79 mm (minus 0, plus 0.40 mm) and width over 1,943.1 mm; or

(C) Products in coils, with chemical composition (percent by weight): carbon 0.045 to 0.094, manganese 0.445 to 0.554, phosphorus 0.020 maximum, sulfur 0.005 maximum, silicon 0.030 maximum, aluminum 0.015 to 0.055, nitrogen 0.0050 maximum, copper 0.040 maximum, tin 0.010 maximum, chromium 0.040 maximum, nickel 0.040 maximum, molybdenum 0.010 maximum, niobium (columbium) 0.020 to 0.030, vanadium 0.005 maximum, boron 0.0005 maximum and titanium 0.005 maximum; minimum yield strength 345 MPa, minimum tensile strength 414 MPa, minimum elongation 26 percent in 50.8 mm; if pickled and oiled, in dimensions of thickness of 3.50 mm (minus 0, plus 0.40 mm) and width 1,936.75 mm or more; or if not pickled and oiled, in dimensions of thickness of 3.50 mm (minus 0, plus 0.40 mm) and width of over 1,943.1 mm;

(vii) Hot-rolled flat-rolled steel, designated as X–119, with thickness 4 mm or more but not over 13 mm, width 400 mm or more but not over 470 mm; with chemical composition (percent by weight): carbon not over 0.12, silicon not over 0.6, manganese not over 2.1, phosphorus not over 0.025, sulfur not over 0.015, aluminum greater than or equal to 0.02, with a maximum of the following microalloying elements: niobium (columbium) 0.09, vanadium 0.20, titanium 0.22, molybdenum 0.50 and boron 0.005; minimum yield strength of 758 MPa in both longitudinal and transverse rolling directions, minimum tensile strength of 814 MPa, Charpy impact values greater than or equal to 17J at $-40°$C; elongation greater than or equal to 15 percent; bendability 1.125 times thickness (minimum);

(viii) Hot-rolled flat-rolled steel, not clad or plated or coated, not further worked than hot-rolled, with thickness of 1.9 mm or more but not over 3.1 mm and width over 254 mm but not over 343 mm; the foregoing designated as X–172 and meeting the following characteristics:

(A) Products with chemical composition (percent by weight): carbon 0.78 to 0.83, manganese 0.40 to 0.50, phosphorus 0.020 maximum, sulfur 0.008 percent maximum, silicon 0.15 to 0.25, chromium 0.05 to 0.15, copper 0.11 maximum, tin 0.020 maximum and aluminum 0.020 to 0.060; with the following other properties: non-metallic

inclusion rating; ASTM E45 Method—A, plate—1 (thin series only, no heavy series allowed), A–2 maximum, B–1 maximum, C–1 maximum, D–1 maximum; DIN 50 602 Method M Plate—1: SS—maximum—3, OA—maximum 1, OS—maximum 1, OG—maximum 2; microstructure: banding—#1 maximum; decarburization complete (free ferrite) 0.012 mm maximum, total (complete + partial) 0.05 mm maximum, carbide size #5 maximum, grain size minimum #7; pickled, ingot cast; hardness HRB 100 maximum;

(B) Products with chemical composition (percent by weight): carbon 0.90 to 1.05, manganese 0.30 to 0.50, phosphorus 0.025 maximum, sulfur 0.008 maximum, silicon 0.15 to 0.30, chromium 0.10 to 0.25, aluminum 0.02 maximum, molybdenum 0.02 to 0.05, copper 0.05 to 0.20 and nickel 0.05 to 0.20; with the following other properties: non-metallic inclusion rating; ASTM E45 Method—A, plate—1 (thin series only, no heavy series allowed), A—2 maximum, B–2 maximum, C–2 maximum, D–2 maximum; microstructure: banding—none; complete decarburization 0.012 mm maximum, total decarburization 0.025 mm maximum; carbide size—#5 maximum (minimum 95 percent spheroidization is required); grain size minimum #7; pickled, ingot cast; hardness HRB 95 maximum;

(C) Products with chemical composition (percent by weight): carbon 0.90 to 1.05, manganese 1.00 to 1.20, phosphorus 0.020 maximum, sulfur 0.007 maximum, silicon 0.15 to 0.35, chromium 0.50 to 0.70, vanadium 0.05 to 0.15, aluminum 0.060 maximum; with the following other properties: non-metallic inclusion rating; ASTM E45 Method—A, plate—1, Thin Series: A–2.5 maximum, B–2.0 maximum, C–2.0 maximum, D–2.0 maximum, Thick Series: A–0.0 maximum, B–0.5 maximum, C–0.5 maximum, D–0.0 maximum; microstructure: banding—none, complete decarburization (free ferrite) 0.012 mm maximum, total (complete + partial) 0.05 mm maximum, carbide size #6 maximum, grain size ASTM #7 or finer; pickled, ingot cast, annealed, hardness HRB 100 maximum;

(D) Products with chemical composition (percent by weight): carbon 0.68 to 0.80, manganese 0.55 to 0.75, phosphorus 0.020 maximum, sulfur 0.015 maximum, silicon 1.30 to 1.50, chromium 0.30 to 0.50, copper 0.20 maximum; with the following other properties: non-metallic inclusion rating: ASTM E45—Method A, Plate—1, A–2 maximum, B–2 maximum, C–2 maximum, D–2 maximum; microstructure: banding—#1 maximum, complete decarburization 0.012 mm maximum, total decarburization 0.05 mm maximum, uniformly spheroidized with pin point carbides, carbide size #3 maximum, grain size minimum #7; pickled, ingot cast; hardness HRB 94 maximum;

(E) Products with chemical composition (percent by weight): carbon 0.30 to 0.35, manganese 0.65 to 0.80, phosphorus 0.015 maximum, sulfur 0.010 maximum, silicon 0.30 to 0.45, copper 0.20 maximum, nickel 0.30 to 0.90, chromium 3.00 to 3.20, molybdenum 2.00 to 2.20, vanadium 0.30 to 0.40, aluminum 0.04 to 0.08, hydrogen 0.001 maximum, nitrogen 0.03 maximum and oxygen .015 maximum; with the following other properties: non-metallic inclusion rating of ASTM E45 Method—A, Plate—1, A–2 maximum, B–2 maximum, C–2 maximum, D–2 maximum; microstructure: banding—#3 maximum, complete decarburization 0.012 mm maximum, total decarburization 0.05 mm maximum, carbide size #5 maximum, grain size minimum #8; pickled, ingot cast; hardness HRB 95 maximum;

(F) Products with chemical composition (percent by weight): carbon 0.45 to 0.50, manganese 0.60 to 0.90 percent, phosphorus 0.015 maximum, sulfur 0.007 maximum, silicon 0.10 to 0.25, chromium 0.90 to 1.10, molybdenum 0.90 to 1.10, calcium 0.001 maximum; copper 0.20 maximum, vanadium 0.08 to 0.15, nickel 0.50 to 0.70, aluminum 0.040 to 0.080, tin 0.020 maximum, antimony 0.020 maximum, hydrogen 0.001 maximum, nitrogen 0.015 maximum and oxygen 0.01 maximum; with the following other properties: non-metallic inclusion rating; ASTM E45 Method;—A plate—-1, (thin series only, no heavy series allowed) A–2 maximum, B–2 maximum, C–2 maximum, D–2 maximum; microstructure: banding—#3 maximum, complete decarburization 0.012 mm maximum, total decarburization 0.05 mm maximum, carbide size #5 maximum, grain size minimum #8; pickled, ingot cast; hardness HRB 95 maximum; or

(G) Products with chemical composition (percent by weight): carbon 0.31 to 0.35, manganese 0.60 to 0.80 percent, phosphorus 0.015 maximum, sulfur 0.005 maximum, silicon 0.25 to 0.45, chromium 0.90 to 1.10, molybdenum 1.85 to 2.15, calcium 0.001 maximum, niobium (columbium) 0.08 to 0.12, vanadium 0.40 to 0.50, nickel 0.90 to 1.10, aluminum 0.03 to 0.07, tin 0.020 maximum and antimony 0.010 maximum, with hydrogen 10 ppm maximum, nitrogen 150 ppm maximum and oxygen 100 ppm maximum; with the following other properties: non-metallic inclusion rating of ASTM E45 Method—A, Plate—1-r: Thin Series: A–2.0 maximum, B–2.0 maximum, C 2.0 maximum, D–2.0 maximum; Thick Series: A–0.0 B–0.5, C–0.5, D–0.0; microstructure: banding—#3 maximum, partial decarburization 1.5 percent of hot roll thickness maximum per side—no free ferrite is allowed, grain size minimum #7; pickled; ingot cast; hardness HRB 96 maximum;

(ix) Hot-rolled, flat-rolled steel, designated as X–213, if entered in an aggregate annual quantity not to exceed 4,800 t during the 12–month period beginning on July 12, 2002 or July 12, 2003 or during the period July 12, 2004 through March 20, 2005, inclusive, the foregoing with improved formability through inclusion shape control; yield strength 551 MPa minimum; tensile strength 621 MPa minimum; elongation in 50.8 mm of 18 percent minimum; with chemical composition (percent by weight): carbon 0.045 to 0.094, manganese 1.45 to 1.65, phosphorus 0.02 maximum, sulfur 0.01 maximum, silicon 0.15 to 0.25, aluminum 0.015 to 0.055, nitrogen 0.005 to 0.011, copper 0.04 maximum, nickel 0.04 maximum, chromium 0.04 maximum, tin 0.01 maximum, niobium (columbium) 0.057 to 0.073, vanadium 0.07 to 0.09, boron 0.0008 maximum and titanium 0.005 maximum; inclusion shape control through a calcium treatment, thickness 6.07 (minus 0, plus 0.406 mm) and width 1384.3 mm (minus 0, plus 25.4 mm);

(x) Three-layer clad plates with two hard outside layers and one soft center layer; with chemical composition (in percent by weight): (i) cladding/hard layer, grade known as ALTRIX 2003: carbon 0.70 to 0.80, silicon not over 0.40, manganese 0.60 to 0.80, phosphorus not over 0.03, sulfur not over 0.03 percent, chromium 0.20 to 0.35; and (ii) soft center layer: carbon not over 0.12, manganese 0.75 to 0.95, phosphorus not over 0.03, sulfur not over 0.03; total thickness of all three layers 6 to 9 mm; the foregoing designated as X–021;

(xi) Stainless steel products, if entered in an aggregate annual quantity not to exceed 63 t during the 12–month period beginning on July 12, 2002 or July 12, 2003 or during the period July 12, 2004 through March 20, 2005, inclusive, the foregoing cold finished, round, flat, square, hexagon and sections in straight lengths, containing by weight at least 17 percent chromium, 7 percent nickel and 2.3 percent molybdenum and conforming to specifications ASTM A276 and ASTM A479, the foregoing designated as X–004;

(xii) Stainless steel products, either round section bars with diameters from 12.7 to 508 mm or products with rectangular sections with thickness 11 or more but not over 356 mm and width 45 or more but not over 762 mm; modified AISI 420 with chemical composition (percent by weight): carbon 0.36 to 0.40, silicon 0.60 to 1.30, manganese 0.20 to 0.70, phosphorus not over 0.025, sulfur not over 0.0050, chromium 13.2 to 14.0, nickel not over 0.50, molybdenum not over 0.25, vanadium 0.15 to 0.40, titanium not over 0.012, niobium (columbium) and nitrogen not over 0.03, copper not over 0.15, aluminum 0.070 to 0.100, hydrogen not over 0.0003 and oxygen not over 0.0015; minimum cleanliness according to ASTM E45/87, Method A plate III Slag type A: T less than 1, H less than 0.5; Slag type B: T less than 1, H less than 0.5; Slag type C: T less than 1.5, H less than 1.0; or Slag type D: T less than 1; all the foregoing designated as X–196;

(xiii) AISI/SAE 201 stainless steel products, cold rolled, annealed, and tempered, in 250 kg spools, thickness 0.25 mm or more but not over 0.8 mm, width 2 mm or more but not over 5 mm; surface and edges to be clean, smooth, and free from cracks and any form of surface imperfections, all the foregoing designated as X–194;

(xiv) Stainless steel rods in cross-sectional diameters measuring less than 5.5 mm, designated as X–090 and meeting the following characteristics:

(A) AISI grade ER 307 Si products, with chemical composition (percent by weight): carbon 0.06 to 0.10, silicon 0.6 to 0.95, manganese 6.5 to 7.5, sulfur not over 0.015, phosphorus not over 0.020, nickel 8 to 9, chromium 18.5 to 19.5 and molybdenum not over 0.5;

(B) AISI grade ER 308 L products, with chemical composition (percent by weight): carbon not over 0.02, silicon 0.30 to 0.60, manganese 1.5 to 2.0, sulfur not over 0.015, phosphorus not over 0.020, nickel 9.5 to 10.5, chromium 19.5 to 20.5, molybdenum not over 0.2 and cobalt not over 0.15;

(C) AISI grade ER 308 L Si products, with chemical composition (percent by weight): carbon not over 0.02, silicon 0.65 to 0.95, manganese 1.5 to 2.0, sulfur not over 0.015, phosphorus not over 0.020, nickel 9.5 to 10.5, chromium 19.5 to 20.5, molybdenum not over 0.2 and cobalt not over 0.15;

(D) AISI grade ER 309 products, with chemical composition (percent by weight): carbon 0.06 to 0.10, silicon 0.30 to 0.60, manganese 1.5 to 2.0, sulfur not over 0.015, phosphorus not over 0.025, nickel 13 to 14, chromium 23.5 to 24.5, molybdenum not over 0.4 and cobalt not over 0.15;

(E) AISI grade ER 309 L products, with chemical composition (percent by weight): carbon not over 0.02, silicon 0.30 to 0.60, manganese 1.5 to 2.0, sulfur not over 0.015, phosphorus not over 0.025, nickel 13 to 14, chromium 23.0 to 24.5, molybdenum not over 0.4 and cobalt not over 0.15;

(F) AISI grade ER 309 L Mo products, with chemical composition (percent by weight): carbon not over 0.02, silicon 0.30 to 0.60, manganese 1.3 to 1.8, sulfur not over 0.015, phosphorus not over 0.025, nickel 14.5 to 15.5, chromium 21 to 22 and molybdenum 2.5 to 3.0;

(G) AISI grade ER 310 products, with chemical composition (percent by weight): carbon 0.10 to 0.15, silicon 0.30 to 0.60, manganese 1.5 to 2.0, sulfur not over 0.015, phosphorus not over 0.025, nickel 20.5 to 21.5 and chromium 25.5 to 26.5; or

(H) AISI grade ER 312 products, with chemical composition (percent by weight): carbon 0.09 to 0.12, silicon 0.20 to 0.50, manganese 1.5 to 2.0, sulfur not over 0.015, phosphorus not over 0.025, nickel 9 to 10, chromium 30 to 31 and molybdenum not over 0.2;

(xv) Flat-rolled products known in industry usage as electrolytic chromium-coated steel (also known as tin free steel), composed according to the following ASTM specifications: A623, A623M, A657 or A657M; with the following properties: actual width of 900.1 mm (minus 0 mm, plus 3.175 mm); plated or coated with chromium oxides or with chromium and chromium oxides; temper of modified DR 550; thickness of 0.215 mm, with gauge tolerance of minus 8 percent, plus 5 percent; continuously annealed; type L chemistry, oiled with dioctyl sebacate (DOS); the foregoing designated as X–160;

(xvi) Welded drawn-over-mandrel tubes, meeting the characteristics described below, imported for the production of specific automotive or agricultural vehicle and machinery components, the foregoing designated as X–162:

(A) Products measuring 20.00 to 35.00 mm outside diameter with an outside diameter tolerance of not over 0.10 mm; wall thickness of 3.00 mm or more but not over 5.00 mm with an allowable wall thickness variation of the greater of 3.0 percent of the thickness or 0.10 mm; with partial decarburization of not over 0.10 mm in depth; produced according to DIN 2393 C under St −34–3 , St 37–3, St 44–3 or St 52–3 with narrowed chemical analysis (aluminum killed only) of composition (percent by weight): carbon not over 0.24, manganese not over 1.60, silicon not over 0.55 and aluminum at least 0.02; the foregoing imported pursuant to a purchase order from an automotive assembled camshaft manufacturer in the United States;

(B) Products produced according to DIN 2393 C under St −34–3 , St 37–3, St 44–3 or St 52–3, with narrowed chemical analysis (aluminum killed only) of composition (percent by weight): carbon not over 0.24, manganese not over 1.60, silicon not over 0.55 and aluminum at least 0.02; and (i) for steering cylinders: measuring 35.00 mm or more but not over 60.00 mm in outside diameter, not over 3.50 mm in wall thickness, an inside diameter tolerance of not over 0.10 mm, and a wall thickness tolerance of 3.0 percent or 0.10 mm, whichever is greater, having partial decarburization of not over 0.10 mm in depth, an inner surface roughness (Rz) of not over 0.004 mm; or (ii) for steering columns: measuring 18.00 mm or more but not over 40.00 mm in outside diameter, 1.00 mm or more but not over 4.00 mm in wall thickness, with an outside diameter tolerance of not over 0.10 mm and a wall thickness tolerance of 3.0 percent or 0.10 mm, whichever is greater, having partial decarburization of not over 0.10 mm in depth; all the foregoing imported pursuant to a purchase order from an automotive steering system manufacturer in the United States;

(C) Products measuring 26.00 mm or more but not over 65.00 mm in outside diameter and 3.00 mm or more but not over 8.00 mm in wall thickness; having an outside diameter tolerance of not over 0.20 mm and having a wall thickness variation of not over 3.0 percent but at least 0.10 mm; having a partial decarburization of not over 0.05 mm in depth; produced according to microalloyed steels for cold upsetting: 19Mn5 mod., 26Mn5 mod., 34Mn5 mod. or 40Mn5 mod.; the foregoing imported pursuant to a purchase order from an automotive half shaft manufacturer in the United States for high quality tubes;

(D) Profiled tubes measuring 30.00 mm or more but not over 100.00 mm outside diameter and 2.40 mm or more but not over 6.00 mm wall thickness and having dimensional tolerances such that a tube pair is telescopic over 2 meters of length, having a partial decarburization not over 0.10 mm in depth, produced according to DIN 2393 C under St −34–3 , St 37–3, St 44–3 or St 52–3 with narrowed chemical analysis (aluminum killed only) of composition (percent by weight): carbon not over 0.24, manganese not over 1.60, silicon not over 0.55 and aluminum at least 0.02; the foregoing imported pursuant to a purchase order from a power takeoff shaft manufacturer in the United States; or

(E) Measuring 17.00 mm or more but not over 40.00 mm in outside diameter with a tolerance of 0.20 mm, wall thickness of 2.30 mm or more but not over 6.00 mm with a wall thickness tolerance of 3.0 percent or 0.10 mm, whichever is greater; partial decarburization not over 0.05 mm in depth, produced as microalloyed steels for cold upsetting: 19Mn5 mod., 26Mn5 mod., 34Mn5 mod. or 40Mn5 mod.; imported pursuant to a purchase order from an automotive stabilizer bar manufacturer in the United States; or

(xvii) Welded drawn-over-mandrel profiled tubes, designated as X–162, the foregoing measuring 6 to 7 m in length, 34.50 mm or more but not over 64.50 mm in outside diameter and 2.50 mm or more but not over 5.50 mm in wall thickness; having dimensional tolerances so that a tube pair is telescopic over 2 m length; produced according to DIN 2393 C under St 52–3 with narrowed chemical analysis (aluminum killed only) of composition (percent by weight): carbon not over 0.24, manganese not over 1.60, silicon not over 0.55 and aluminum of 0.02 or more; the foregoing imported pursuant to a purchase order from a power takeoff shaft manufacturer in the United States.

(xviii) Hot-rolled flat-rolled products, designated as X–021 and meeting the characteristics described below:

(A) Products entered in an aggregate annual quantity not to exceed 1,953 t during the 12-month period beginning on July 12, 2002 or July 12, 2003 or during the period July 12, 2004 through March 20, 2005, inclusive, the foregoing with chemical composition (percent by weight): carbon 0.05 to 0.10, silicon 0.20 to 0.50, manganese 1.60 to 2.00, phosphorus not over 0.020, sulphur not over 0.008, aluminum 0.020 to 0.080, nickel 0.30 to 0.65, molybdenum 0.20 to 0.50, copper 0.20 to 0.40, vanadium 0.040 to 0.100, niobium (columbium) 0.020 to 0.060 and titanium 0.010 to 0.050; carbon equivalent value (CEV) (C + MN/6 (Cr + Mo + V)/5 + (Ni+ Cu)/15) of 0.48 to 0.56, carbon equivalent tekken (CET) (C + (Mn + Mo)/10 + (Cr + Cu)/20 + Ni/40) of 0.29 to 0.035; thickness of 8 mm to 25 mm; width of 1,828.8 mm to 2,500 mm for thickness range 8 mm to 15 mm or of 1,828.8 mm to 3,000 mm for thickness range from 15 to 25 mm; minimum yield strength (ReH) 700 N/mm^2, tensile strength (Rm) 750 to 950 N/mm^2, fracture elongation minimum A5 of 12 percent; notch impact energy at −40 °C on Charpy/V samples in longitudinal direction, minimum average value of 40 joule; and bendability of 2 times thickness for 180 degree bend both transverse and longitudinal orientation;

(B) Products entered in an aggregate annual quantity not to exceed 1,000 t during the 12-month period beginning on July 12, 2002 or July 12, 2003 or during the period July 12, 2004 through March 20, 2005, inclusive, the foregoing with chemical composition (percent by weight): carbon 0.10 to 0.15, silicon 0.20 to 0.50, manganese 0.80 to 1.60, phosphorus not over 0.020, sulphur not over 0.008, aluminum 0.020 to 0.080, nickel 1.00 to 2.00, molybdenum 0.20 to 0.50, copper 0.30 to 0.50, vanadium 0.030 to 0.100, niobium (columbium) not over 0.050 and titanium 0.010 to 0.050; carbon equivalent value (CEV) (C + MN/6 (Cr + Mo + V)/5 + (Ni + Cu)/15) of 0.62 to 0.69, carbon equivalent tekken (CET) (C + (Mn + Mo)/10 + (Cr + Cu)/20 + Ni/40) of 0.34 to 0.38; thickness 8 mm to 25 mm; width 1,828.8 mm to 2,500 mm; minimum yield strength (ReH) 900 N/mm^2; tensile strength (Rm) 940 to 1,100 N/mm^2; fracture elongation minimum A5 of 11 percent; notch impact energy at −40 °C on Charpy/V samples in longitudinal direction; minimum average value of 40 joule; and bendability of 2 times thickness for 180 degree bend both transverse and longitudinal orientation; or

(C) Products entered in an aggregate annual quantity not to exceed 1,000 t during the 12-month period beginning on July 12, 2002 or July 12, 2003 or during the period July 12, 2004 through March 20, 2005, inclusive, the foregoing with chemical composition (percent by weight): carbon 0.10 to 0.15, silicon 0.20 to 0.50, manganese 0.80 to 1.60, phosphorus not over 0.020, sulphur not over 0.008, aluminum 0.020 to 0.080, nickel 1.00 to 2.00, molybdenum 0.20 to 0.50, copper 0.30 to 0.50, vanadium 0.030 to 0.100, niobium (columbium) not over 0.050 and titanium 0.010 to 0.050; carbon equivalent value (CEV) (C + MN/6 (Cr + Mo + V)/5 + (Ni+ Cu)/15) of 0.62 to 0.69, carbon equivalent tekken (CET) (C + (Mn + Mo)/10 + (Cr + Cu)/20 + Ni/40) of 0.34 to 0.38; thickness 8 mm to 25mm; width 1,828.8 mm to 2,500 mm; minimum yield strength (ReH) 960 N/mm^2; tensile strength (Rm) 980 to 1150 N/mm^2; fracture elongation minimum A5 of 10 percent; notch impact energy at −40 °C on Charpy/V samples in longitudinal direction; minimum average value of 27 joule; and bendability of 2 times thickness for 180 degree bend both transverse and longitudinal orientation;

(xix) Hot-rolled flat-rolled products, designated as X–032 or X–083 and entered in an aggregate annual quantity not to exceed 3,850 t during the 12-month period beginning on July 12, 2002 or July 12, 2003 or during the period July 12, 2004 through March 20, 2005, inclusive, the foregoing known in industry usage as ''13 percent manganese austenitic'' plate; with the following characteristics: non-magnetic; flatness certified to meet ASTM–A6 specification; thickness 4.76 mm to 120.65 mm; width not exceeding 3,048 mm; length not exceeding 8,636 mm; hardness of 180 to 260 BHN; fully austenitic microstructure; in the as-rolled or quench-annealed condition; with chemical composition (percent by weight): carbon 0.80 to 1.20, manganese 12.00 to 14.00, sulfur not over 0.040, phosphorus not over 0.035 and silicon not over 0.50, with or without other elements;

(xx) Hot-rolled flat-rolled designated as X–142, with the following characteristics:

(A) Products known in industry usage as ''abrasion resistant steel'; thickness 6.0 mm to 65.0 mm; minimum hardness 401 BHN; with chemical composition (percent by weight): titanium 0.35 to 0.45, carbon 0.29 to 0.31, silicon 0.30 to 0.40, manganese 0.65 to 0.75, phosphorus none to not over 0.010, sulfur not over 0.010, chromium 0.80 to 0.90, molybdenum 0.22 to 0.27; boron 0.0008 to 0.0014, soluble aluminum 0.03 to 0.06 and nitrogen 0.002 to 0.006; descaled; flatness tolerance half of that shown in ASTM A6;

(B) Thermo-mechanically controlled-rolled products having the following characteristics: TMCP (thermo mechanical control process) with a thickness of 4.5 mm to 76.2 mm; yield strength 552 to 690 MPa; minimum tensile strength 621 MPa; Welded Crack Tip Opening Test (CTOD) value at −10 °C: minimum 0.25 mm; with chemical composition (percent by weight): carbon not over 0.12, silicon not over 0.40, manganese not over 2.00, phosphorus not over 0.015, sulfur not over 0.006, niobium (columbium) not over 0.030 and titanium not over 0.020; Pcm no more than 0.23 (Pcm = C + Mn/20 + Si/30 + Cu/20 + Ni/60 + Cr/20 + Mo/15 + V/5 + 5B);

(C) Products entered in an aggregate annual quantity not to exceed 439 t during the 12-month period beginning on July 12, 2002 or July 12, 2003 or during the period July 12, 2004 through March 20, 2005, inclusive, the foregoing having a width greater than 915 mm, meeting SAE 4135 specification with the following ladle analysis (percent by weight): carbon 0.33 to 0.38, manganese 0.60 to 0.90, silicon 0.15 to 0.30, phosphorus not over 0.030, sulfur not over 0.030, chromium 0.90 to 1.25 and molybdenum 0.15 to 0.25;

(D) Products entered in an aggregate annual quantity not to exceed 432 t during the 12-month period beginning on July 12, 2002 or July 12, 2003 or during the period July 12, 2004 through March 20, 2005, inclusive, the foregoing having a width greater than 915 mm, meeting the following specification (modified SAE 8670) for chemical composition (percent by weight): carbon 0.67 to 0.75, manganese 0.40 to 0.60, silicon 0.20 to 0.35, phosphorus not over 0.035, sulfur not over 0.035, chromium 0.20 to 0.50, nickel 0.70 to 1.00 and molybdenum 0.11 to 0.15; or

(E) Products entered in an aggregate annual quantity not to exceed 6500 t during the 12-month period beginning on July 12, 2002 or July 12, 2003 or during the period July 12, 2004 through March 20, 2005, inclusive, the foregoing known in industry usage as ''thermo-mechanically controlled-rolled plate''; having the following characteristics: TMCP (thermo mechanical control process): high strength tensile alloy plate; with thickness of 6.0 mm to 40.0 mm; minimum yield strength 685 N/mm^2; tensile strength 780 to 890 N/mm^2; with chemical composition (percent by weight): titanium 0.008 to 0.017, carbon 0.14 to 0.15, silicon 0.3 to 0.4, manganese 1.14 to 1.40, phosphorus not over 0.02, sulfur not over 0.004, chromium 0.05 to 0.18, molybdenum 0.11 to 0.32, niobium (columbium) 0.017 to 0.023, vanadium not over 0.050, boron 0.0008 to 0.0015, soluble aluminum 0.015 to 0.035 and nitrogen not over 0.004; bendability of one-half times thickness for 180 degree bend; permissible variations from flatness one-fourth of that shown for ASTM A6; Charpy impact at −40 °C, minimum of 40J; carbon equivalent: not over 0.40 percent for products not over 19 mm in thickness, or not over 0.43 percent for products over 19 mm but not over 40 mm in thickness (carbon equivalent = C + MN/6 + (CU + NI)/15 + (CR + MO + V)/5);

(xxi) Cold drawn steel bars, designated as N–319, the foregoing if in standard metric sizes and of round or hexagonal cross section then having a diameter of 5 mm to 70 mm, if of square cross section then measuring 25 mm to 100 mm, or if of rectangular cross section having the smaller side measuring 16 mm to 100 mm and the larger side measuring 25 mm to 250 mm; with chemical composition (percent by weight): carbon 0.18 maximum, manganese 0.90 maximum; phosphorus 0.50 maximum, sulfur 0.050 maximum and remainder iron;

(xxii) Bars of hexagonal cross section, not further worked than cold drawn, measuring 57.15 mm or more but not over 101.6 mm in cross section according to ASTM A29/A108 in freecutting, medium carbon grades; the foregoing designated as N–321;

(xxiii) Bars of nonalloy steel, of round cross section, not further worked than cold formed or cold finished, the foregoing designated as N–377 and meeting the characteristics described below:

(A) Products plated with an inner layer of nickel and an outer layer of hard chrome; having a nickel-layer thickness exceeding 40 micrometers and a chromium layer thickness exceeding 20 micrometers; polished; with the following properties: diameter tolerance of ISO h8 or better, straightness 0.1 mm per meter or better, surface roughness (ra) 0.2 micrometers or better and certified as capable of exposure for 1000 hours in ASTM B117 salt-spray test without corrosive attack; or

(B) Either noninduction hardened or induction hardened products; hard-chrome plated with a chrome layer thickness exceeding 25 micrometers; polished; with the following properties: diameter tolerance ISO h8 or better, straightness 0.1 mm per meter or better, surface roughness (ra) 0.2 micrometers or better and capability of exposure for 96 hours in ASTM B117 salt-spray test without corrosion;

(xxiv) Bars not further worked than cold formed or cold finished, designated as N–454 and meeting the characteristics described below:

(A) Forged and fully heat treated die steel, known in industry usage as ''Hydie'' with a chemical composition (percent by weight): carbon 0.45 maximum, silicon 0.50 maximum, manganese 0.80 maximum, chromium 3.50 maximum, molybdenum 1.20 maximum and vanadium 0.30 maximum with or without other minor alloying element; thickness not over 500 mm; in round or rectangular cross-section; supplied heat treated to a maximum hardness of 477 brinell;

(B) Spheroidised annealed or spheroidised annealed and fully heat treated forged die steel, known in industry usage as ''VMC'' the foregoing suitable for use in die inserts, extrusion tools, plastic molds, die casting inserts and cores; with a chemical composition (percent by weight): carbon 0.45 maximum, silicon 1.20 maximum, manganese 0.40, chromium 5.40, molybdenum 1.70 and vanadium 1.10 maximum, with or without other minor alloying elements; with thickness not over 500 mm, in round or rectangular cross-section; supplied heat treated to a maximum hardness of 514 brinell;

(C) Forged and fully heat treated die steel, known in industry usage as ''Somdie'' with chemical composition (percent by weight): carbon 0.60 maximum, silicon 0.40 maximum, manganese 1.00 maximum, nickel 1.90 percent maximum, chromium 1.30 maximum, molybdenum 0.65, with or without other minor alloying elements; thickness not over 900 mm; in round or rectangular cross-section; supplied heat treated to a maximum hardness of 477 brinell;

(D) Forged and fully heat treated die steel, known in industry usage as ''Bestem'' with chemical composition (percent by weight):

carbon 0.30 maximum, silicon 0.35 maximum, manganese 0.75 maximum, nickel 3.20 maximum, chromium 1.00 maximum and molybdenum 3.50 percent, with or without other minor alloying elements; thickness not over 500 mm; in round or rectangular cross-section; supplied heat treated to a maximum hardness of 477 brinell;

(E) Forged and fully heat treated die steel, known in industry usage as ''Thermodie'' with chemical composition (percent by weight): carbon 0.60 maximum, silicon 0.70 maximum, manganese 0.70 maximum, nickel 2.40 maximum, chromium 1.10 maximum and molybdenum 0.80, with or without other minor alloying elements; thickness not over 750 mm, in round or rectangular cross-section; supplied heat treated to a maximum hardness of 477 brinell; or

(F) Forged and fully heat treated die steel, known in industry usage as ''No. 5 Electem'' with chemical composition (percent by weight): carbon 0.60 maximum, silicon 0.35 maximum, manganese 1.00 maximum, nickel 1.50 maximum, chromium 1.10 maximum and molybdenum 0.40; with or without other minor alloying elements; thickness not over 900 mm; in round or rectangular cross-section; supplied heat treated to a maximum hardness of 429 brinell;

(xxv) Cold-finished carbon steel bars, known in industry usage as ''JIS S48CL'', the foregoing with diameter of 24.3 mm (with tolerance of ± 0.05 mm); cut-to-length; with minimum tensile strength of 735N/mm², minimum yield strength of 539N/mm² and minimum elongation of 15 percent; with chemical composition (percent by weight): carbon 0.45 to 0.51, silicon 0.15 to 0.35, manganese 0.75 to 0.90, phosphorus 0.030 maximum, sulfur 0.015 to 0.040, copper 0.30 maximum, nickel 0.20 maximum, chromium 0.20 maximum, nickel plus chromium 0.35 maximum and lead 0.10 to 0.30; the foregoing designated as X–011;

(xxvi) Bright or blue finish band saw steel, designated as N–313, cold-rolled, meeting the following characteristics: thickness not over 1.31 mm, width not over 80 mm; with chemical composition (percent by weight): carbon 1.2 to 1.3, silicon 0.15 to 0.35, manganese 0.20 to 0.40, phosphorus not over 0.03, sulphur not over 0.015, chromium 0.15 to 0.25 and nickel not over 0.25; with the following other properties: carbides fully spheroidized, having greater than 80 percent of carbides, which are not over 0.003 mm and uniformly dispersed; surface finish blue or bright free from pits, scratches, rust, cracks, or seams; smooth edges; edge camber (in each 300 mm of length) of not over 7 mm arc height; and cross bow of 0.025 mm maximum per 25.4 mm of width;

(xxvii) Cold-rolled flat-rolled wood bandsaw steel in grade UHB 15 N 20; the foregoing with thickness greater than 1.1 mm; width range 6.3 to 412.8 mm; with chemical composition (percent by weight): carbon 0.70 to 0.80, silicon 0.20 to 0.35, manganese 0.30 to 0.45, phosphorus 0.020, sulfur 0.016, nickel 1.90 to 2.10; microstructure fine needled, tempered martensite with a uniform distribution of few (maximum 1 percent by volume) undissolved carbides; inclusions: to DIN 50602: K1 oxide less than 10; maximum OG: 8.2; decarburization: free ferrite not allowed; maximum partial decarburization 4 percent of product thickness; tensile strength/hardness 1450 + 80 N/mm² (42 to 46 HRC); product thickness of not over 2.0 mm 1370 + 80 N/mm² (40 to 43 HRC); surface appearance bright polished/ground surface; maximum approved scratch depth for longitudinal and transversal scratches 10 μ edges: square fine machine smooth edges; flatness: maximum unflatness of 0.10 percent of the nominal product width; maximum coil set: 10 mm/m; straightness: product width of not over 40 mm with a maximum deviation of 0.35 mm per 0.9 m; product width of not over 134 mm with a maximum deviation of 0.25 mm per 0.0 or 0.8 per 3 m; thickness tolerance; T1: within g a product maximum half the tolerance zone for T1; width tolerance B1; the foregoing designated as N–387;

(xxviii) Cold-rolled flat-rolled semi-processed silicon electrical steel, designated as X–077 and meeting the characteristics described below:

(A) Products entered in an aggregate annual quantity not to exceed 6,395 t during the 12-month period beginning on July 12, 2002 or July 12, 2003 or during the period July 12, 2004 through March 20, 2005, inclusive, the foregoing meeting ASTM A726 specifications and having the following characteristics: thickness of 0.47 mm ±0.002 mm and width of 1057.28 mm +10 mm/ − 0; with chemical composition (percent by weight): carbon 0.003, silicon 0.57, manganese 0.43, phosphorus 0.03, sulfur 0.005 and aluminum 0.35; density 7.80 (g/cm3); mechanical properties: hardness of Hv 71; yield strength of 397 MPa or more (longitudinal); tensile strength of 450 MPa or more (longitudinal); elongation of 18 percent (longitudinal); lamination factor of 96.0 percent; coating: dull finish anti-stick coating similar to C4A, supplier's proprietary D coating; magnetic properties: core loss (1.5T/60 Hz) of 4.01 watts/kg typical, 4.41 maximum; permeability (1.5T/60 Hz) of 3630 typical, 2000 minimum; and annealed at 788 °C for one hour in a decarburizing atmosphere;

(B) Products entered in an aggregate annual quantity not to exceed 1,599 t during the 12-month period beginning on July 12, 2002 or July 12, 2003 or during the period July 12, 2004 through March 20, 2005, inclusive, the foregoing meeting ASTM A726 specifications and having the following characteristics: thickness of 0.47 mm ± 0.002 mm and width of 1057.28 mm +10 mm/ − 0; with chemical composition (percent by weight): carbon 0.002, silicon 0.55, manganese 0.85, phosphorus 0.05, sulfur 0.005 and aluminum 0.25; density 7.80 (g/cm3); mechanical properties: hardness of Hv 130; yield strength of 421 MPa or more (longitudinal); tensile strength of 460 MPa or more (longitudinal); elongation of 21 percent (longitudinal); lamination factor of 97.0 percent; coating: dull finish anti-stick coating similar to C4A, supplier's proprietary D coating; magnetic properties: core loss (1.5T/60 Hz) of 3.64 watts/kg typical, 4.08 maximum; permeability (1.5T/60 Hz) of 3000 typical, 2000 minimum; and annealed at 788°C for one hour in a dry N_2 atmosphere; or

(C) Flat-rolled, cold-rolled, silicon bearing, non-oriented electrical steel, entered in an aggregate annual quantity not to exceed 1,550 t during the 12-month period beginning on July 12, 2002 or July 12, 2003 or during the period July 12, 2004 through March 20, 2005, inclusive; the foregoing with thickness of 0.50 mm; maximum core loss of 3.70 watts per kg at 60 Hz and 1.5 tesla, when tested on a 25-cm Epstein frame according to the method of IEC 60404–2, where half of the sample products are taken in the longitudinal direction and half in the transverse direction; with carbon not over 0.005 percent by weight; with an inorganic surface insulation (known in industry usage as ''Suralac 7000'') with a smooth finish that provides a minimum of 12.9 ohms-cm² @ 2.07 MPa tested per ASTM A717/A717M on a Franklin tester; capable of withstanding stress-relieving temperatures without impairing surface insulation, and with an intermittent temperature capability of 850 °C in inert gas as well as a continuous temperature capability of 230 °C in air; industry grade M15;

(xxix) Cold-rolled flat-rolled steel, designated as X–083 and meeting the characteristics described below:

(A) Products entered in an aggregate annual quantity not to exceed 850 t during the 12-month period beginning on July 12, 2002 or July 12, 2003 or during the period July 12, 2004 through March 20, 2005, inclusive, the foregoing single reduced, 90 base box weight, T–1 BA, Type MR, 5C matte finish; with thickness of 0.231 mm to 0264 mm and width from 1079.50 mm to 1089.03 mm; produced to ASTM A623–00 and A624–98; certified that such products will each be slit into two coils of equal widths, each coil having a minimum width of 533.4 mm, for use in manufacturing radiator fins; or

(B) Products entered in an aggregate annual quantity not to exceed 250 t during the 12-month period beginning on July 12, 2002 or July 12, 2003 or during the period July 12, 2004 through March 20, 2005, inclusive, the foregoing single reduced, 112 base weight, T–2 BA, Type MR, 5C matte finish; with thickness of 0.290 mm to 0.328 mm and width of 1066.80 mm; produced to ASTM A623–00 and A624–98; certified that it will be slit into two coils of equal widths, each coil having a minimum width of 520.7 mm and for use in manufacturing engine gaskets;

(xxx) Cold-rolled flat-rolled steel products, designated as X–142 and meeting the characteristics described below:

(A) Products entered in an aggregate annual quantity not to exceed 5,534 t during the 12-month period beginning on July 12, 2002 or July 12, 2003 or during the period July 12, 2004 through March 20, 2005, inclusive, the foregoing in coils, meeting SAE 1050, spheroidized annealed, light matte finish; with thickness of 0.254 mm to 2.324 mm and width of 914 mm to 1,321 mm; slit edge, no weld; Coil I/D 508 mm; Coil O/D 1,524 mm maximum; thickness tolerance (at center of product): ±0.006 mm for thickness from 0.254 mm to 0.381 mm; ±0.007 mm for thickness from 0.381 mm to 0.635 mm; ±0.010 mm for thickness from 0.635 mm to 2.324 mm; rating 1.0 maximum by ASTM E45, method-A; and restricted carbon range of 0.02 points;

(B) Products entered in an aggregate annual quantity not to exceed 100 t during the 12-month period beginning on July 12, 2002 or July 12, 2003 or during the period July 12, 2004 through March 20, 2005, inclusive, the foregoing in coils, SAE 1074, spheroidized annealed, light matte finish; thickness of 0.254 mm to 2.324 mm and width of 914 mm to 1,321 mm, slit edge, no weld; Coil I/D: 508 mm; Coil O/D: 1,524 mm maximum; thickness tolerance (center of sheets): ±0.006 mm for thickness from 0.254 mm to 0.381 mm; ±0.007 mm for thickness 0.381 mm or more but not over 0.635 mm; ±0.010 mm for thickness 0.635 mm or more but not over 2.324 mm; rating 1.0 Max by ASTM E45, method-A; and restricted carbon range of 0.02 points;

(C) Products with thickness from 0.8 mm to 1.0 mm; tensile strength 980 to 1080 N/mm^2; yield strength 700 to 850 N/mm^2; elongation 11 to 20 percent; minimum stretch flangeability 30 percent; with chemical composition (percent by weight): carbon maximum 0.19, silicon maximum 1.60, manganese maximum 2.20, phosphorus maximum 0.02 and, sulfur maximum 0.010;

(D) Products with thickness from 1.0 mm to 1.2 mm; tensile strength 980 to1080 N/mm^2; yield strength 690 to 850 N/mm^2; elongation 12 to 21 percent; minimum stretch flangeability 30 percent; with chemical composition (percent by weight): carbon maximum 0.19, silicon maximum 1.60, manganese maximum 2.20, phosphorus maximum 0.020 and sulfur maximum 0.010;

(E) Products with thickness from 1.2 mm to 1.6 mm; tensile strength 980 to1,080 N/mm^2; yield strength 690 to 850 N/mm^2; elongation 13 to 22 percent; minimum stretch flangeability 30 percent; with chemical composition (percent by weight): carbon maximum 0.19, silicon maximum 1.60, manganese maximum 2.20, phosphorus maximum 0.020 and sulfur maximum 0.010;

(F) Products with thickness from 1.6 mm to 2.3 mm; tensile strength 980 to 1,080 N/mm^2; yield strength 690 to 850 N/mm^2; minimum elongation 13 percent; minimum stretch flangeability 30 percent; with chemical composition (percent by weight): carbon maximum 0.19, silicon maximum 1.60, manganese maximum 2.20, phosphorus maximum 0.020 and sulfur maximum 0.010;

(G) Products with thickness from 0.8 mm to 1.0 mm; tensile strength 980 to 1,060 N/mm^2 yield strength 590 to 730 N/mm^2 elongation 13 to 20 percent; with chemical composition (percent by weight): carbon maximum 0.19, silicon maximum 1.60, manganese maximum 2.20; phosphorus maximum 0.020 and sulfur maximum 0.010;

(H) Products with thickness 1.0 mm to 1.2 mm; tensile strength 980 to1060 N/mm^2; yield strength 580 to 730 N elongation 14 to 21 percent; with chemical composition (percent by weight): carbon maximum 0.19, silicon maximum 1.60, manganese maximum 2.20, phosphorus maximum 0.020 and sulfur maximum 0.010;

(I) Products with thickness 1.2 mm or more but not over 1.6 mm; tensile strength 980 to1060 N yield strength 580 to 730 N elongation 14 to 22 percent; with chemical composition (percent by weight): carbon maximum 0.19, silicon maximum 1.60, manganese maximum 2.20, phosphorus maximum 0.020 and sulfur maximum 0.010; or

(J) Products with thickness 1.6 mm to 2.3 mm; tensile strength 980 to1060 N yield strength 580 to 730 N minimum elongation 14 percent; with chemical composition (percent by weight): carbon maximum 0.19, silicon maximum 1.60, manganese maximum 2.20, phosphorus maximum 0.020 and sulfur maximum 0.010;

(xxxi) Cold-rolled flat-rolled products, designated as X–143 and meeting the characteristics described below:

(A) Single-reduced black plate, entered in an aggregate annual quantity not to exceed 2,467.6 t during the 12-month period beginning on July 12, 2002 or July 12, 2003 or during the period July 12, 2004 through March 20, 2005, inclusive, and meeting the specification ASTM–A625, having either a minimum thickness of 0.34 mm and a coil width of 125.73 cm, or a thickness of 0.29 mm or more but not over 0.36 mm and a coil width of 67.31 cm to 101.60 cm; the foregoing satisfying the following characteristics: a maximum hardness on the Rockwell B scale of R B–47, with no lap welds and a dry surface roughness of Ra 1.25 to 2.25 microns; with chemical composition (percent by weight): carbon 0.045 maximum, chromium 0.05 maximum and aluminum 0.07 maximum; and certified for use for the manufacture of cookware; or

(B) Cold-rolled drawing quality steel, entered in an aggregate annual quantity not to exceed 1,161.2 t during the 12-month period beginning on July 12, 2002 or July 12, 2003 or during the period July 12, 2004 through March 20, 2005, inclusive, and meeting the specification ASTM–A619, with a thickness of 0.360 mm or more; the foregoing satisfying the following characteristics: a maximum weight of 5,625 kg per coil (except as provided below), a maximum hardness on the Rockwell B scale of R B–47, with no lap welds and a dry surface roughness of Ra 1.25 to 2.25 microns; with chemical composition (percent by weight): carbon 0.045 maximum, chromium 0.05 maximum and aluminum 0.07 maximum; in the following thickness and coil width combinations respectively: 0.40 mm × 102.24 cm, 0.44 mm × 116.21 cm, 0.45 mm × 120.97 cm; 0.36 mm × 101.92 cm, 0.36 mm × 104.46 cm, 0.36 mm × 90.49 cm, 0.40 mm × 77.79 cm, 0.44 mm × 63.50 cm, 0.44 m × 82.87 cm, 0.39 mm × 93.03 cm, 0.45 mm × 104.46 cm, 0.38 mm × 91.76 (the latter having a maximum weight of 3,600 kg per coil) or 0.42 mm × 91.76 cm (the latter having a maximum weight 3,600 kg per coil); and certified for use in the manufacture of cookware;

(xxxii) Aluminized coated hardenable manganese-boron steel, designated as N–316 and known in industry usage as ''USIBOR''; having the following properties: in coils 624 mm to 1600 mm wide; 0.6 mm to 3.0 mm in thickness; having ASTM 463–A coating; with chemical composition (percent by weight): carbon not over 0.25, manganese not over 1.35, sulfur not over 0.008, aluminum not over 0.06, silicon not over 0.35, chromium not over 0.30, nitrogen not over 0.009, boron not over 0.004 and titanium not over 0.05; yield strength of 360 to 480 MPa; tensile strength of 540 to 660 MPa; and elongation of 21 percent;

(xxxiii) Corrosion resistant continuously annealed flat-rolled products, designated as N–426, continuous cast, the foregoing with chemical composition (percent by weight): carbon not over 0.06 percent by weight, manganese 0.20 or more but not over 0.40, phosphorus not over 0.02, sulfur not over 0.023, silicon not over 0.03, aluminum 0.03 or more but not over 0.08, arsenic not over 0.02, copper not over 0.08 and nitrogen 0.003 or more but not over 0.008; and meeting the characteristics described below:

(A) Products with one side coated with a nickel-iron-diffused layer which is less than 1 micrometer in thickness and the other side coated with a two-layer coating composed of a base nickel-iron-diffused coating layer and a surface coating layer of annealed and softened pure nickel, with total coating thickness for both layers of more than 2 micrometers; surface roughness (RA–microns) 0.18 or less; with scanning electron microscope (SEM) not revealing oxides greater than 1;

(B) Products having one side coated with a nickel-iron-diffused layer which is less than 1 micrometer in thickness and the other side coated with a four-layer coating composed of a base nickel-iron-diffused coating layer, with an inner middle coating layer of annealed and softened pure nickel, an outer middle surface coating layer of hard nickel and a topmost nickel-phosphorus-plated layer; with combined coating thickness for the four layers of more than 2 micrometers; surface roughness (RA-microns) 0.18 or less; with SEM not revealing oxides greater than 1 micron; and inclusion groups or clusters not exceeding 5;

(C) Products having one side coated with a nickel-iron-diffused layer which is less than 1micrometer in thickness and the other side coated with a three-layer coating composed of a base nickel-iron-diffused coating layer, with a middle coating layer of annealed and softened pure nickel and a surface coating layer of hard, luster-agent-added nickel which is not heat-treated; with combined coating thickness for all three layers of more than 2 micrometers; surface roughness (RA-microns) 0.18 or less; with SEM not revealing oxides greater than 1 micron; and inclusion groups or clusters exceeding 5 microns in length; or

(D) Products having one side coated with a nickel-iron-diffused layer which is less than 1 micrometer in thickness and the other side coated with a three-layer coating composed of a base nickel-iron-diffused coating layer, with a middle coating layer of annealed and softened pure nickel and a surface coating layer of hard, pure nickel which is not heat-treated; with combined coating thickness for all three layers of more than 2 micrometers; surface roughness (RA–microns) 0.18 or less; SEM not revealing oxides greater than 1 micron; and inclusion groups or clusters shall not exceed 5 microns in length;

(xxxiv) Electrogalvanized flat-rolled products, designated as N–455 and meeting the characteristics described below:

(A) Products with chemical composition (percent by weight): carbon not over 0.010,

manganese not over 0.6, phosphorus not over 0.16, sulfur not over 0.03, silicon 2.0 to 3.0 and iron the remainder; with a thickness of 1.0 to 1.6 mm, thickness tolerance ±0.09 mm, tensile strength 50.0 to 64.2 kgf/mm^2; yield point 38.2 to 45.9 kg/mm^2; permeability 450 to 1000 (at the magnetic force of 0.30 Oe, according to JIS C 2550), with zinc or zinc-nickel electroplating weight of 20 g/m^2; (minimum 17 g/m^2, maximum 26 g/m^2); approximate thickness 3 mm;

(B) Products, whether or not with a chromate-free coating, with a zinc-nickel alloy electroplating, coating weights of zinc-nickel 17 g/m^2 minimum; thickness tolerance ±5 percent; tensile strength of 49 to 56 kgf/m m^2, yield point of 38 to 45 kgf /mm^2, magnetic properties 700 u or greater; with chemical composition (percent by weight): carbon 0.07 maximum, silicon 3.5 maximum, manganese 2.0 maximum, phosphorus 0.15 maximum and sulfur 0.02 maximum; or

(C) Products, whether or not with chromate or a chromate-free coating, whether or not with heat-resistant coating, with the following specifications: tensile strength 40 to 65 kgf/mm^2 yield point 25 to 46 kgf/mm^2 permeability 450 or greater (measured at the magnetic force of 0.30 Oe under direct-current mode; according to JIS C2550); zinc-nickel alloy electroplating; coating weights of zinc-nickel 17 to 24 g/m^2, if applicable chromate coating 40 to 70 mg/m^2, if applicable chromate-free coating 90 to 160 mg/m^2, and if applicable heat-resistance coating 0.3 to 1.2 g/m^2; thickness 1.0 to 1.6 mm, thickness tolerance ±5 percent; width tolerance minus 0, plus 7 mm; warp 5 mm maximum and camber 2 mm/2,000 mm maximum; with chemical composition (percent by weight): carbon 0.010 maximum, silicon 3.0 maximum, manganese 2.0 maximum, phosphorus 0.16 maximum and sulfur 0.03 maximum;

(xxxv) High strength electrolytic zinc-coated silicon steel flat-rolled products, designated as N–456 and meeting the characteristics described below:

(A) Products whether or not with a chromate or chromate-free coating, with the following specifications: thickness 1.0 to 1.6 mm, thickness tolerance ±5 percent; width tolerance minus 0, plus 7 mm; tensile strength 41 to 45 kgf/mm^2; yield point 26 to 30 kgf/mm^2; magnetic properties of permeability 800 or more; with zinc-nickel alloy electroplating, coating weights of zinc-nickel 17 to 24 g/m^2 minimum, and if applicable chromate-free coating of 90 to 160 mg/m^2; heat resistant chemical treatment of 0.3 to 1.0 g/m^2; maximum deviation from horizontal flat surface of 5 mm, with the camber of mother coils not larger than 2 mm/2000 mm in length; with chemical composition (percent by weight): carbon 0.01 maximum, silicon 1.0 to 2.0, manganese 0.5 to 1.5, phosphorus 0.16 maximum and sulfur 0.03 maximum; or

(B) Products whether or not with a chromate or chromate-free coating, with the following specifications: thickness 1.0 to 1.6 mm, thickness tolerance ±5 percent; width tolerance minus 0, plus 7 mm; tensile strength 45 to 49 kgf/mm^2; yield point 32 to 36 kgf/mm^2; magnetic properties of permeability 500 or more; zinc-nickel alloy electroplating; with coating weights of zinc-nickel 17 to 24 g/m^2 minimum, and if applicable chromate-free coating 90 to 160 mg/m^2; heat resistant chemical treatment of 0.3 to 1.0 g/m^2; maximum deviation from horizontal flat surface of 5 mm, with the camber of mother coils not larger than 2 mm/2000 mm in length; with chemical composition (percent by weight): carbon 0.01 maximum, silicon 1.0 to 2.0, manganese 0.5 to 1.5, phosphorus 0.16 maximum and sulfur 0.03 maximum;

(xxxvi) Copper-coated or nickel-coated cold-rolled slit-to-width steel, in coils, designated as N–491 and meeting the characteristics described below:

(A) Products having a thickness of 0.508 mm to 0.889 mm and width of 34.671 mm to 51.82 mm; with chemical composition (percent by weight): carbon 0.05 to 0.08, manganese 0.27 to 0.45, phosphorus 0.015 maximum and sulphur 0.035 maximum; with the following other properties: cold-rolled from low carbon rimmed, capped, aluminum-killed or continuous cast steel; uniformly coated with smooth and clean copper, free from pits, blisters, or roughness; deposited electrolytically on the two flat surfaces of the product in a quantity not less than 54.93 g per m^2 (18 oz per ft^2) of product (both sides) or 27.46 g per m^2 (0.09 oz per ft^2) of surface (one side) and not more than 100.7 g per m^2 (0.33 oz per ft^2) of product (both sides) or 50.35 g per m^2 (0.165 oz per ft^2) of surface (one side); wound in coils with an inside diameter of 406 mm to 419 mm; with minimum outside diameter of 508 mm and maximum outside diameter of 1,219 mm; or

(B) Products having a thickness of 0.508 mm to 0.889 mm and width of 34.671 mm to 51.82 mm; with chemical composition (percent by weight): carbon 0.030 to 0.050, manganese 0.11 to 0.20, phosphorus 0.025 maximum, sulphur 0.020 maximum, silicon 0.025 maximum, aluminum 0.025 to 0.07 and nitrogen 0.007 maximum; with copper plus nickel plus chromium 0.150 maximum; with the following other properties: low carbon aluminum killed steel made by continuous casting process; uniformly coated with nickel free from pits or blisters deposited electrolytically on one surface (plated side) of the product in a minimum thickness of 0.00381 mm and the bare side of the product with a maximum of 0.000762 mm of nickel thickness; the plated product is then annealed, and wound in coils with a maximum inside diameter of 508 mm and a maximum outside diameter of 1,727.2 mm;

(xxxvii) Hot-rolled carbon steel bar products, in coils, designated as N–303 and meeting the characteristics described below:

(A) Products known in industry usage as JIS SCM420HVC, having a diameter of 34.0 mm (with tolerances of ±1 mm); with chemical composition (percent by weight): carbon 0.17 to 0.23, silicon 0.15 to 0.35, manganese 0.55 to 0.90, phosphorus 0.030 maximum, sulfur 0.010 to 0.030, copper 0.30 maximum, nickel 0.25 maximum, chromium 0.85 to 1.25, molybdenum 0.10 to 0.25 and niobium (columbium) 0.030 to 0.060;

(B) Products known in industry usage as JIS SCR420HVC, having a diameter of 39.1 mm and 41.5 mm (with tolerances of ±1 mm); with chemical composition (percent by weight): carbon 0.17 to 0.23, silicon 0.15 to 0.35, manganese 0.55 to 0.90, phosphorus 0.030 maximum, sulfur 0.010 to 0.030, copper 0.30 maximum, nickel 0.25 maximum, chromium 0.85 to 1.25 and oxygen 0.0015 maximum; or

(C) Products known in industry usage as JIS SCM435HVC; having a diameter of 33.5 mm (with tolerances of ±0.05 mm); with chemical composition (percent by weight): carbon 0.32 to 0.39, silicon 0.15 to 0.35, manganese 0.55 to 0.90, phosphorus 0.030 maximum, sulfur 0.010 to 0.015, copper 0.30 maximum, nickel 0.25 maximum, chromium 0.85 to 1.25 and molybdenum 0.10 to 0.25;

(xxxviii) Austenitic manganese steel round and flat bars (Bohler K700), with chemical composition (percent by weight): carbon 1 to 1.3, silicon 0.10 to 0.45, manganese 12.00 to 14.00, phosphorus 0.035 maximum, sulfur 0.040 maximum, chromium 0.50 maximum, molybdenum 0.150 maximum and nickel 0.40 maximum; the foregoing designated as N–387;

(xxxix) Standard rephosphorized and resulfurized carbon steel bars and rods (AISI 1200 Series), designated as N–392 and entered in an aggregate annual quantity not to exceed 30,000 t, the foregoing in coils or straight lengths, not further worked than hot-rolled, of a type known in industry usage as XLCUT; with chemical composition (percent by weight): 0.04 or more phosphorus, 0.24 or more but not over 0.35 sulfur and 0.23 or more but not over 0.35 lead; manganese-to-sulfur ratios of greater than 3:1; reduction ratio for coiled bar and rod of a minimum of 150:1 and for straight bar and rod of a minimum of 35:1; fully surface inspected and certified by the importer to be free from defects deeper than 2 percent of bar and rod diameter or section; certified as free from mixes; achieved by 100 percent spectrometer testing;

(xl) Galvanized, cold formed steel channels, designated as N–495, with surface finish of smooth in-line galvanized zinc coating with controlled mass of 100 g/m^2 minimum applied after forming by a specialized continuous process, with the zinc coating further passivated to resist white rust; not further cold worked; not manufactured from pre-galvanized product; supplied in lengths of approximately 6.096 m; with the following specifications: product specification TS100, with channels, size range: (i) 76.2 mm × 38.1 mm, 101.6 mm × 50.8 mm or 127 mm × 63.5 mm, with a thickness of 3.96mm and yield strength of 450 MPa, or (ii) 152.4 mm × 76.2 mm, 177.8 mm × 76.2 mm or 203.2 mm × 76.2 mm, with a thickness of 4.77 mm and yield strength of 450 MPa, or (iii) 203.2 mm × 76.2 mm, 228.6 mm × 76.2mm, 254 mm × 88.9 mm or 304.8 mm × 88.9 mm, with a thickness of 5.94 mm, 250 × 90 mm or 300 × 90 mm with thickness of 6.0 mm and a yield strength of 450 MPa, or (iv) 304.8 mm × 88.9 mm × 7.95 mm or 300 mm × 90 mm × 6.0 mm, with a yield strength of 400 MPa; tolerances: squareness (angular tolerance); with included angle between the sides of a channel of 90 degrees; with maximum out of squareness of a channel in accordance with the following: where the shorter leg length is less than 50.8 mm ± 2.0 degrees, where the shorter leg

length is greater than 50.8 mm but less than 76.2 mm ± 1.5 degrees, where the shorter leg length is greater than 76.2 mm ± 1.0 degree; twist: maximum angle of twist 1 degree over 1 m; feedstock produced by a fully killed, continually cast steel process to produce a feedstock material with fine grain with controlled and qualified chemistry (percent by weight): 0.20 maximum carbon, 1.60 maximum manganese, 0.10 maximum silicon, 0.10 maximum aluminum, 0.040 maximum phosphorus and 0.030 sulfur; with chemistry controlled to provide a carbon equivalent of no more than CE=0.39; all channels produced from flat product having a uniform cross section (wall thickness);

(xli) Hot-rolled carbon steel bar products designated as X–011 and meeting the characteristics described below:

(A) Products known in industry usage as JIS S35CL, having a diameter of 42 mm (with tolerances of plus or minus 1 mm); cut-to-length; with chemical composition (percent by weight): carbon 0.32 to 0.38, silicon 0.15 to 0.35, manganese 0.60 to 0.90, phosphorus 0.030 maximum, sulfur 0.015 maximum, copper 0.30 maximum, nickel 0.20 maximum, chromium 0.20 maximum, nickel plus chromium 0.35 maximum and lead 0.13 to 0.23; or

(B) Products known in industry usage as JIS S40CKM–1; having a diameter of 95 mm or 120 mm (with tolerances of ± 1 mm); cut-to-length; with chemical composition (percent by weight): carbon 0.36 to 0.44, silicon 0.15 to 0.35, manganese 0.40 to 0.70, phosphorus 0.03 maximum, sulfur 0.03 to 0.08, copper 0.10 maximum, nickel 0.10 maximum, nitrogen 0.010 to 0.020 and lead 0.10 to 0.20;

(xlii) Thermal refined, water quenched, and drawn hot-rolled bars, designated as X–075, with hardness 318 HV minimum, 83 kg/mm minimum tensile strength; 8 percent minimum elongation; microstructure consisting of tempered martensite for 5 mm to 8 mm followed by 1 mm of tempered martensite and transition products; general bar structure consisting of pearlite and ferrite; decarburization 0.85 maximum of bar diameter;

(xliii) Hot-rolled bars, designated as X–134 and meeting the characteristics described below:

(A) Products known in industry usage as ''NAK 55,'' the foregoing which are double-melted hot-rolled or forged plastic mold steel products, with chemical composition (percent by weight): carbon 0.15, manganese 1.50, sulfur 0.10, copper 1.00, silicon 0.30, molybdenum 0.30, nickel 3.00 and aluminum 1.00; displaying the following minimum mechanical properties: hardness of HRC 40, yield strength (0.2 percent offset, 41 HRC) of 1010 MPa, tensile strength of 1255 MPa; reduction of 39.8 percent; elongation in 50 mm of 15.6 percent; with Charpy-notch impact strength longitudinal 9.8 J and transverse of 7.6 J; displaying the following physical properties: coefficient of thermal expansion from 20 °C to 100 °C of 11.3×10^{-6} °C^{-1}, from 20 °C to 200 °C of 12.6×10^{-6} °C^{-1} and from 20 °C to 300 °C of 13.5×10^{-6} °C^{-1}; coefficient of thermal conductivity (J/(smK)) at 93 °C of 41.4 or at 204 °C of 42.2; having magnetic properties of maximum magnetic permeability of 380, saturated magnetism of 16,350 Gauss and residual magnetism of 8,500 Gauss;

(B) Products known in industry usage as ''NAK 80,'' the foregoing being a plastic mold steel used for applications such as clear lens molds and extremely critical diamond finish applications, with chemical composition (percent by weight): carbon 0.15, manganese 1.50, molybdenum 0.30, copper 1.00, silicon 0.30 , nickel 3.00 and aluminum 1.00; minimum mechanical properties: HRC 40; tensile strength 1264 MPa; reduction 41.9 percent; yield strength (0.2 percent offset, 41 HRC) 1018 MPa; elongation in 50 mm (longitudinal) 16.1 percent; Charpy V-Notch impact strength (toughness): longitudinal 11.0 J.; transverse 11.5 J.; physical properties: coefficient of thermal expansion (10^{-6}/K), 20 °C to 100 °C of 11.3, 20 °C to 200 °C of 12.6, 20 °C to 300 °C of 13.5; coefficient of thermal conductivity (J/(smK)) at 93 °C of 41.4, at 204 °C of 42.2; magnetic properties: maximum magnetic permeability 380, saturated magnetism (gauss) 16,360, residual magnetism (gauss) 8,500, and coercive force (Oersted) 14.0; double melted, first in an electric furnace then in a vacuum arc re-melt furnace, hot-rolled or forged to shape and age hardened to Nickel 40; and produced through a super clean, vacuum-arc remelt manufacturing process;

(C) Products known in industry usage as ''Super NAK'' (''NAK HH''), the foregoing being a plastic mold steel providing a unique combination of high hardness and ability to machine-work the steel; with the following chemical composition (percent by weight): carbon 0.11, manganese 1.4, copper 1.0, chromium 1.6, aluminum 1.0, silicon 0.30, sulfur 0.35, nickel 3.0 and molybdenum 0.3; physical properties: HRC 45; tensile strength 1385 MPa longitudinal, 1359 MPa transverse; yield strength 1031 MPa longitudinal, 1,009 transverse, elongation 11 percent longitudinal, 4 percent transverse, reduction of area 22 percent longitudinal, 6 percent transverse; density of 7.78 mg/m^3; produced in an electric furnace then vacuum arc re-melt furnace; hot-rolled or forged to shape; and age hardened to HRC 45 to 48;

(D) Products known in industry usage as ''PX5,'' the foregoing being a plastic mold steel used in all types of plastic molding and design, and is superior to AISI grade P20-type steels in terms of machining, stability, and welding; with the following chemical composition (percent by weight): carbon 0.20, manganese 1.90, sulfur 0.035, molybdenum 0.45, copper 0.10, silicon 0.10 percent, phosphorus 0.010, nickel 0.20, aluminum 0.030 and chromium 2.10; minimum mechanical properties: HRC 30 to 33; tensile strength 1,034 MPa; reduction 48 percent; yield strength 917 MPa; elongation in 50 mm (longitudinal) 20 percent; physical properties: coefficient of thermal expansion (10^{-6}/K), 20 °C to 100 °C of 11.9, 20 °C to 200 °C of 12.8, 20 °C to 300 °C of 13.1, 20 °C to 400 °C of 13.5 and 20 °C to 600 °C of 14.0; coefficient of thermal conductivity (J/(smK)) at 20 °C of 42.5, at 100 °C of 42.4, at 200 °C of 42.1, at 300 °C of 39.2 and at 400 °C of 38.8; produced by electric furnace melting, ladle degassed and refined; proprietary forging, rolling and heat-treating practices are utilized to produce an exceptionally fine-grained, stable, tough and easy to machine and weld mold steel; or

(E) Products known in industry usage as ''CX1,'' the foregoing being a proprietary cold work die steel that is supplied heat treated to hardness of HRC 50, and can also be machined at this hardness, with the following chemical composition (percent by weight): carbon 0.80, manganese 1.30 chromium 1.00 and molybdenum 0.80; mechanical properties (as supplied): HRC 50; tensile strength 1786 MPa; yield strength 1641 MPa; elongation 8 percent; and reduction in area 19 percent; physical properties: coefficient of linear thermal expansion (10^{-6}/K): 20 °C to 200 °C of 12.9 or 20 °C to 420 °C of 13.9; coefficient of thermal conductivity (J/(smK)) at 20 °C of 30.7; density 7.71 mg/m^3; produced by electric furnace melting, ladle degassing and refining; having undergone proprietary forging, rolling and heat-treating practices utilized to produce an exceptionally fine-grained, stable, tough and easy to machine and weld die steel;

(xliv) Ball bearing quality hot-rolled bar or wire rod steel, SAE/AISI grade 52100 or JIS SUJ2 specifications, the foregoing designated as X–188;

(xlv) Hot-rolled sheet, in coils, designated as N–300, the foregoing produced to specification API 5L Grade X–52; with chemical composition (percent by weight): Carbon 0.03 to 0.07, manganese 0.95 to 1.20, phosphorus not over 0.010, sulfur not over 0.002, silicon 0.170 to 0.250, copper not over 0.15, nickel not over 0.10, chromium not over 0.07, molybdenum not over 0.03, nitrogen not over 0.009, aluminum 0.020 to 0.050, tin not over 0.020, vanadium not over 0.008, niobium (colombium) 0.016 to 0.026, titanium not over 0.008 and calcium 0.0004 to 0.0050; having the following physical properties: yield ratio of less than 0.900; factor formula of C + Mn/5 + 2(Cb); factor range of 28 to 35; thickness range of 6.35 mm or more but not over 12.70 mm; width range of 1,032.027 mm or more but not over 1,735.38 mm; thickness tolerance: aim ½ ASTM tolerance, except 40 m both ends to be 3/4 ASTM per A568–96, Table 4 and A635–96, Table 4; width tolerance: plus 19.05 mm, minus 0.00 mm, aim plus 10.16 mm (untrimmed); crown tolerance: aim 0.0508 mm, range (minimum minus 0.0127 mm/maximum 0.0762 mm); coil inside diameter of 762.0 mm; coil outside diameter of a maximum of 1,828.8 mm, not to exceed 20,901 kg coil weight; other properties: calcium treated with calcium to sulfur ratio of between 2:1 and 5:1; all heats must be vacuum degassed; oxygen content must be less than 25 ppm; steel produced shall be suitable for HIC-resistant applications as determined by NACE standard TM 0284–96, all the foregoing certified for use in the manufacturing into line pipe;

(xlvi) Hot-rolled flat-rolled steel, designated as N–316 and meeting the characteristics described below:

(A) High strength low alloy grade 100 light gauge steel, with the following characteristics: thickness of 2.3 mm to 3.0 mm; width from 1016 mm to 1524 mm; with chemical composition (percent by weight):

carbon not over 0.1, manganese not over 2.0, phosphorus not over 0.025, sulfur not over 0.01, silicon not over 0.4, aluminum 0.02 to 0.06, titanium not over 0.02, molybdenum not over 0.5, niobium (columbium) not over 0.09 and vanadium not over 0.2; yield strength of 700 to 800 MPa; tensile strength of 750 to 910 MPa; elongation not less than 13 percent; and guaranteed bending radius of 1.6 times;

(B) High strength low alloy grade 100 light gauge steel, with the following characteristics: thickness 4.5 mm or more but not over 12.7 mm; width 1.524 m or more but not over 1.829 m; with chemical composition (percent by weight): carbon not over 0.1, manganese not over 2.0, phosphorus not over 0.025, sulfur not over 0.01, silicon not over 0.4, aluminum 0.02 to 0.06, titanium not over 0.02, molybdenum not over 0.5, niobium (columbium) not over 0.09 and vanadium not over 0.2; yield strength of 700 to 800 MPa; tensile strength of 750 to 910 MPa; elongation not less than 13 percent; guaranteed bending radius of 1.6 times a thickness less than 6 mm and 1.8 times a thickness greater than 6 mm; or

(C) Temper passed grade A1001CSB/1008 CQ products, with thickness 3.1 mm or more but not over 3.6 mm and width 2032 mm or more; yield strength of 179 to 340 MPa; tensile strength of 440 MPa maximum; minimum elongation of 28 percent; with chemical composition (percent by weight): carbon not over 0.1, manganese not over 0.5, phosphorus not over 0.03, sulfur not over 0.03, silicon not over 0.03, copper not over 0.04, nickel not over 0.04, chromium not over 0.04 and aluminum over 0.01;

(xlvii) Hot-rolled flat-rolled products, in coils, the foregoing designated as X–025 and meeting the characteristics described below:

(A) Products with chemical composition (percent by weight): carbon 0.10 to 0.16, manganese 0.70 to 0.90, phosphorus not over 0.025, sulfur not over 0.002, silicon 0.30 to 0.50, chromium 0.50 to 0.70, copper not over 0.25, nickel not over 0.20 and molybdenum not over 0.21; with the following other properties: width not over 1,138 mm; thickness not over 8.89 mm; yield strength greater than or equal to 551 N/mm^2; tensile strength 724 N/mm^2; thickness tolerance according to half of ASTM 568 specification; elongation greater than or equal to 16 percent; hardness of 70 to 105 HRB; pickled and oiled; surface condition free of injurious defects such as holes, breaks, scabs, scale, and embosses; product must enable coiled tubing to satisfy fatigue test (SPE papers 22820, 38407 and 54482) constantly;

(B) Products with chemical composition (percent by weight): carbon 0.10 to 0.14, manganese 1.30 to 1.80, phosphorus not over 0.025, sulfur not over 0.001, silicon 0.30 to 0.50, chromium 0.50 to 0.70, copper 0.20 to 0.40, nickel not over 0.20, vanadium not over 0.10 and niobium (columbium) not over 0.08; with the following other properties: width not over 1,138 mm; thickness not over 8.89 mm; yield strength greater than or equal to 551 N/mm^2; tensile strength 724 N/mm^2; thickness tolerance according to half of ASTM 568 specification; elongation 14 percent or more; hardness of 80 to 105 HRB; pickled and oiled; surface condition free of injurious defects such as holes, breaks, scabs, scale, and embosses; product produced to enable coiled tubing to satisfy fatigue test (SPE papers 22820, 38407, and 54482);

(C) Products with chemical composition (percent by weight): carbon not over 0.15, manganese not over 1.40, phosphorus not over 0.025, sulfur not over 0.010, silicon not over 0.50, chromium not over 1.00, copper not over 0.50, nickel not over 0.20, niobium (columbium) 0.005 or more and aluminum 0.01 to 0.07; calcium treated; with the following other properties: width not over 1,000 mm; thickness not over 4.6 mm; yield strength 482 N/mm^2 or more; tensile strength 551 N/mm^2 or more; thickness tolerance according to half of ASTM 568 specification; pickled and oiled; surface condition free of injurious defects such as holes, breaks, scabs, scale, and embosses; product produced to enable coiled tubing to satisfy fatigue test (SPE papers 22820, 38407, and 54482);

(D) Products with chemical composition (percent by weight): carbon 0.10 to 0.15, manganese 1.30 to 1.80, phosphorus not over 0.025, sulfur not over 0.001, silicon 0.30 to 0.50, chromium 0.30 to 0.70, copper 0.20 to 0.40, nickel not over 0.20, molybdenum not over 0.40, niobium (columbium) not over 0.08 and vanadium not over 0.10; with the following other properties: width not over 1,138 mm; thickness not over 8.89 mm; yield strength 482 N/mm^2 or more; thickness tolerance according to half of ASTM 568 specification; elongation 14 percent or more; hardness of 80 to 110 HRB; pickled and oiled; surface condition free of injurious defects such as holes, breaks, scabs, scale, and embosses; product produced to enable coiled tubing to satisfy fatigue test (SPE papers 22820, 38407, and 54482);

(E) Products with chemical composition (percent by weight): carbon 0.10 to 0.16, manganese 0.70 to 0.90, phosphorus not over 0.020, sulfur not over 0.002, silicon 0.30 to 0.50, chromium 0.50 to 0.70, copper not over 0.25, nickel not over 0.20 and molybdenum not over 0.21; with the following other properties: width not over 1,138 mm; thickness not over to 8.89 mm; yield strength of 355 N/mm^2 to 569 N/mm^2; tensile strength 482 N/mm^2 or more; thickness tolerance according to half of ASTM 568 specification; elongation 18 percent or more; hardness of 9 to 25 HRC; pickled and oiled; surface condition free of injurious defects such as holes, breaks, scabs, scale, and embosses; product produced to enable coiled tubing to satisfy fatigue test (SPE papers 22820, 38407, and 54482);

(xlviii) Alloy and nonalloy flat-rolled products, designated as X–083 and entered in an aggregate annual quantity not to exceed 20,000 t during the 12-month period beginning on July 12, 2002 or July 12, 2003 or during the period July 12, 2004 through March 20, 2005, inclusive, the foregoing not further worked than hot-rolled, with the following features: sulfur content 0.005 percent by weight maximum; elongation: 18 percent minimum/31 percent maximum for 1.6 mm to 2.0 mm, 20 percent minimum/32 percent maximum for 2.0 mm to 3.2 mm, 21 percent minimum/33 percent maximum for 3.2 mm to 6.3 mm, 22 percent minimum for 6.3 mm to 12.00 mm; total thickness tolerance: 0.20 mm maximum for 1.6 mm to 4.0 mm, 0.25 mm maximum for 4.0 mm to 6.0 mm, 0.30 mm maximum for 6.0 mm to 8.0 mm, 0.35 mm maximum for 8.0 mm to 12.0 mm; with in-line temper-passed and tension-leveled hot-rolled pickled and oiled flat-rolled products of nonalloy steel in grade 50 meeting the following chemical composition (percent by weight): carbon 0.03 to 0.08, manganese 0.1 to 1.3, silicon not over 0.03, aluminum 0.02 to 0.04, phosphorus not over 0.02, sulfur not over 0.008, copper not over 0.05, nickel not over 0.1, chromium not over 0.1, niobium (columbium) 0.01 to 0.04, titanium not over 0.03, vanadium not over 0.008 and nitrogen not over 0.009; with the combined silicon and phosphorus content not over 0.09; the combined niobium (columbium), titanium, and vanadium content not over 0.22; and carbon equivalent not over 0.36; yield strength of 345 to 448 MPa; tensile strength of 448 to 586 MPa; elongation of 21 percent minimum; thickness 2.4 mm to 7.5 mm; width 1200 mm to 1652 mm; with a typical whiteness value of 70 on scale L*, certified to flatness guarantee of 4 international units before and after laser cutting and to guarantee of no visible defect after painting for both sides of flat panel; and with visible defects including blemishes due to roll marks, pits, tolling scale and scratches;

(xlix) Hot-rolled flat-rolled products, in coils, having width of 1943.1 mm, tolerances of plus 6.35 mm, minus 0.000; composed according to specification SAE C–1006 DQSK, the foregoing designated as X–104;

(l) Hot-rolled flat-rolled steel products, designated as X–108 and meeting the characteristics described below:

(A) Products with thickness of 2 mm or more but not over 11.1 mm; width of 875 or more but not over 1625 mm; minimum yield strength of 689.48 MPa, minimum tensile strength of 158.4 MPa, minimum elongation of 15 percent, bendability of 1.6 to 1.8 times thickness, impact toughness of 27.1 J at –17.8 °C; with chemical composition (percent by weight): maximum carbon 0.12, maximum silicon 0.60, maximum manganese 2.0, maximum phosphorus 0.025, maximum sulfur 0.01, maximum titanium 0.20 and minimum aluminum 0.015 percent; or

(B) Weather resistant steel products, with a thickness of 2.3 mm or more but not over 6.5 mm and width of 875 mm or more but not over 1600 mm; minimum yield strength of 689.48 MPa, minimum tensile strength of 724 MPa, minimum elongation of 18 percent, bendability of 1 times thickness, impact toughness of 27.1 J at − 17.8 °C; with chemical composition (percent by weight): maximum carbon 0.10, maximum silicon 0.45, maximum manganese 0.8 and maximum phosphorus 0.012 percent, with microalloying elements added;

(li) Hot-rolled flat-rolled steel products, designated as X–142 and meeting the characteristics described below:

(A) High-carbon alloy steel, with widths greater than 914 mm and made to the following specification: SAE 8660 (modified) (unit: percent by weight, ladle analysis): carbon 0.61 to 0.72, manganese 0.30 to 0.50, nickel 0.60 to 0.90 and molybdenum 0.10 to 0.15;

(B) High-carbon alloy steel, with widths greater than 914 mm and made to the

following specification: SAE 8670 (modified); with chemical composition (percent by weight): carbon 0.67 to 0.75, manganese 0.40 to 0.60, silicon 0.20 to 0.35, phosphorus 0.035 maximum, sulfur 0.035 maximum, chromium 0.20 to 0.50, nickel 0.70 to 1.00 and molybdenum 0.11 to 0.15;

(C) Steel products with chemical composition (percent by weight): carbon 0.20 maximum, silicon 1.20 maximum, manganese 2.00 maximum, phosphorus 0.05 to 0.10, sulfur 0.02 maximum, copper 0.15 to 0.40, nickel 0.40 maximum, aluminum 0.10 maximum, niobium (columbium) 0.10 maximum, titanium 0.10 maximum, vanadium 0.10 maximum, boron 0.10 maximum, molybdenum 0.30 maximum; thickness 1.6 to 2.0 mm; tensile strength 590 MPa minimum; yield strength 450 to 600 MPa; and elongation 19 to 35 percent;

(D) Steel products with chemical composition (percent by weight): carbon 0.20 maximum, silicon 1.20 maximum, manganese 2.00 maximum, phosphorus 0.05 to 0.10, sulfur 0.02 maximum, copper 0.15 to 0.40, nickel 0.40 maximum, aluminum 0.10 maximum, niobium (columbium) 0.10 maximum, titanium 0.10 maximum, vanadium 0.10 maximum, boron 0.10 maximum and molybdenum 0.30 maximum; thickness 2.0 to 3.0 mm; tensile strength 590 MPa minimum; yield strength 440 to 590 MPa; and elongation 20 to 36 percent; or

(E) Steel products with chemical composition (percent by weight): carbon 0.20 maximum, silicon 1.20 maximum, manganese 2.00 maximum, phosphorus 0.05 to 0.10, sulfur 0.02 maximum, copper 0.15 to 0.40, nickel 0.40 maximum, aluminum 0.10 maximum, niobium (columbium) 0.10 maximum, titanium 0.10 maximum, vanadium 0.10 maximum, boron 0.10 maximum and molybdenum 0.30 maximum; thickness 3.0 to 6.0 mm; tensile strength 590 MPa minimum; yield strength 430 to 580 MPa; and elongation 21 to 37 percent;

(lii) Alloy steel plate, designated as N–316, the foregoing known in industry usage as ''SP 300'' and in the form of pre-forged and rolled blocks or forged extra-heavy section blocks; with the following characteristics: thickness 152 mm or more; hardness of 269 to 304 BHN or 290 to 320 BHN; through hardness dispersion not exceeding 15 BHN for thicknesses not over 203 mm and 30 BHN for thicknesses of 203 or more but not over 1,270 mm; conforming to ASTM A578–S9 ultrasonic testing requirements; 2mm flat bottom hole; guaranteed cleanliness per ASTM E45 Method A (worst field ratings: A—not exceeding 1.5, B—not exceeding 1.5, C—not exceeding 1.0, D—not exceeding 1.5); with chemical composition (percent by weight): carbon 0.235 to 0.275, chromium 1.2 to 1.5, manganese 1.2 to 1.5, molybdenum 0.35 to 0.55, silicon 0.05 to 0.15 and sulfur 0.015 to 0.02; oxygen content not exceeding 20 ppm and hydrogen content not exceeding 2 ppm;

(liii) Hot-rolled weldable, soft magnetic special structural alloy steel plate, with increased electrical resistivity of the grade magnetic soft hot rolled (MSH), with thickness 4.75 mm or more but not over 50 mm and width 1016 mm or more but not over 3302 mm; with chemical composition (percent by weight): carbon 0.10 or more, silicon 1.00 to 2.00, manganese 0.15 to 0.60, phosphorus 0.02 or more, sulfur 0.01 or more, chromium 0.65 to 1.00, copper 0.55 or more, aluminum not over 0.02 and titanium 0.02 or more; yield strength of 275 MPa minimum; tensile strength of 430 to 550 MPa and elongation of 24 percent minimum; the foregoing designated as N–467;

(liv) Products designated as X–083 and meeting AISI 4142, the foregoing with dimensions of 1,651 mm by 3,683 mm; thickness of 6 mm to 230 mm; cross rolled in thickness up to 203 mm and forged and hot rolled in thickness greater than 203 mm; through-hard throughout the entire plate with a maximum dispersion of 30 BHN; conforms to ultrasonic testing requirements per ASTM A578-S9 with a 2 mm flat bottom hole used for calibration; microcleanliness ratings per ASTM E–45 method D where the sum of the ratings does not exceed 25 and the maximum worst field ratings are A: 1.0 maximum (thin) and 0.5 maximum (heavy), B: 1.0 maximum thin) and 0.5 maximum (heavy), C: 0.5 maximum (thin and heavy), D: 0.5 maximum. (thin and heavy); flatness that does not exceed 3 mm per meter, with a maximum of 5 mm over the entire length of 3683 mm; with chemical composition (percent by weight): carbon 0.36 to 0.42, manganese 1.10 to 1.30, silicon 0.35 to 0.45, sulfur 0.012 to 0.020, phosphorus not over 0.03, nickel 0.25 to 0.50, chromium 1.00 to 1.20, molybdenum 0.15 to 0.35 and copper not over 0.30; with O_2 not exceeding 20 ppm and H_2 not over 2 ppm; known in industry usage as ''Marshalloy MQ™'' mold quality;

(lv) Flat-rolled hot-rolled plate, designated as X–100 and entered in an aggregate annual quantity not to exceed 75,000 t during the 12-month period beginning on July 12, 2002 or July 12, 2003 or during the period July 12, 2004 through March 20, 2005, inclusive; the foregoing not in coils; of a thickness greater than 4.74 mm; certified for use in the production of large diameter line pipe (greater than 406 mm in diameter); yield strength greater than or equal to 483 MPa;

(lvi) Stainless steel bars, designated as N–387 and known in industry usage as ''RAMAX S'', the foregoing being a modified AISI 400 stainless sulfurized plastic mold steel; with chemical composition (percent by weight): carbon 0.31 to 0.36, silicon 0.20 to 0.50, manganese 1.20 to 1.50, phosphorus not over 0.035, sulfur 0.08 to 0.15, chromium 16.2 to 17.0, nickel 0.40 to 0.70, molybdenum not over 0.60; vanadium not over 0.40, nitrogen 0.10 to 0.14, copper not over 0.30, aluminum not over 0.030 and hydrogen less than 7.0 ppm; if round sections then diameter from 28 mm to 500 mm; if flat sections then thickness 43 mm to 305 mm and width 300 mm to 1,016 mm; vacuum degassed; minimum criterion on cleanliness according to ASTM E45/87, Method A plate I.; Slag type A; T-, H-; Slag type B; T 2.0, H 2.0; Slag type C; T 1.0, H 1.0; Slag type D; T .0, H less than 1.0;

(lvii) Stainless steel bar, designated as N–387 and known in industry usage as ''STAVAX Supreme,'' the foregoing which is a premium modified AISI 420 stainless plastic mold steel; with chemical composition (percent by weight): carbon 0.21 to 0.26, silicon 0.20 to 0.50, manganese 0.40 to 0.70, phosphorus 0.025, sulfur not over 0.0050, chromium 13.0 to 13.60, nickel 1.25 to 1.45, molybdenum 0.30 to 0.40, vanadium 0.30 to 0.40, titanium and niobium (columbium) each not over 0.0050, nitrogen 0.10 to 0.14, copper not over 0.15 and aluminum 0.010 to 0.025; hydrogen less than 3 ppm and oxygen less than 15 ppm; dimensions round from 12.7 mm to 762 mm and flat thickness 11 mm to 610 mm, width 45 mm to 915 mm; vacuum degassed and pressure-electro-slag-remelting; cleanliness according to ASTM E45/87, Method A plate III; Slag type A; T less than 1, H less than 0.5; Slag type B; T less than 1, H less than 0.5; Slag type C; T less than1.5, H less than 1.0; Slag type D; T less than 1.0, H less than 0.5;

(lviii) Stainless steel bars, of round cross-section, designated as X–093, the foregoing in diameters of 6.35 mm to 101.6 mm, lengths of 3,048 mm to 4.572 mm; finished as follows: for X15TN finished via centerless grinding, or for X15TNW finished via rough-turning; with chemical composition nickel free and including (percent by weight): carbon 0.35 to 0.45, chromium 15.00 to 16.50, molybdenum 1.50 to 2.00, vanadium 0.15 to 0.35, nitrogen 0.15 to 0.25 and sulfur 0.0005 maximum;

(lix) Hot-rolled stainless steel bars, designated as X–219, finished black, in diameters up to 30 mm; lengths of 3,048 mm to 4,572 mm; with chemical composition (percent by weight): carbon 0.80 to 0.90, chromium 17.00 to 18.50, nickel not over 0.50, manganese not over 1.30, molybdenum 2.00 to 2.50, vanadium 0.35 to 0.55, silicon not over 1.00 and sulfur 0.0005 maximum;

(lx) Stainless steel wire, designated as X–018 and meeting the characteristics described below:

(A) Products known in industry usage as SF20T, with chemical composition (percent by weight): carbon 0.05 maximum; manganese 2.00 maximum, phosphorus 0.05 maximum, sulfur 0.15 maximum, silicon l.00 maximum, chromium 19.00 to 21.00, molybdenum 1.50 to 2.50, lead added 0.10 to 0.30, tellurium added 0.03 minimum; or

(B) Products known in industry usage as DSR16FA, with chemical composition (percent by weight): carbon 0.15 maximum, manganese 1.25 maximum, phosphorus 0.06 maximum, sulfur 0.10 to 0.18, silicon 1.00 maximum, chromium 10.50 to 14.00, molybdenum 0.10 to 0.40, lead added 0.07 to 0.30 and selenium added 0.10 minimum;

(lxi) Stainless steel wire, designated as X–177 and meeting the characteristics described below:

(A) ASL 813 rectangular or shaped wire, certified for use in the production of piston rings, the foregoing with chemical composition (percent by weight): carbon 0.60 to 0.70, silicon 0.25 to 0.50, manganese 0.20 to 0.50, phosphorus maximum 0.03, sulfur maximum 0.03, chromium 13.00 to 14.00, molybdenum 0.20 to 0.40 and remainder iron; decarburization less than 0.01 mm; and edge camber maximum of 10 mm per 1,000 mm length;

(B) ASL 874 rectangular or shaped wire, certified for use in the production of piston rings, the foregoing with chemical

composition (percent by weight): carbon 0.80 to 0.95, silicon 0.35 to 0.50, manganese 0.25 to 0.40, phosphorus maximum 0.04, sulfur maximum of 0.04, chromium 17.0 to 18.0, molybdenum 1.00 to 1.25, vanadium 0.08 to 0.15, cobalt 3.8 to 4.2 and remainder iron; edge camber maximum of 10 mm per 1,000 mm length; and decarburization less than 0.01 mm;

(C) ASL 857 rectangular or shaped wire, certified for use in the production of piston rings, the foregoing with chemical composition (percent by weight): carbon 0.60 to 0.75, silicon 0.30 to 0.45, manganese 0.25 to 0.40, phosphorus maximum 0.04, sulfur maximum 0.03, chromium 14.0 to 16.0, molybdenum 0.90 to 1.15, vanadium 0.20 to 0.30, cobalt 6.0 to 8.0 and remainder iron; edge camber maximum of 10 mm per 1,000 mm length; and decarburization less than 0.01 mm;

(D) ASL 817 rectangular or shaped wire, certified for use in the production of piston rings, the foregoing with chemical composition (percent by weight): carbon 0.80 to 0.95, silicon 0.35 to 0.50, manganese 0.25 to 0.40, phosphorus maximum of 0.04, sulfur maximum 0.04, chromium 17.0 to 18.0, molybdenum 1.0 to 1.25, vanadium 0.08 to 0.15 and remainder iron; edge camber maximum of 10 mm per 1,000 mm length; and decarburization less than 0.01 mm;

(E) ASL 801 flat or shaped wire, certified for use in the production of spacer-expander (piston oil) rings, the foregoing with chemical composition (percent by weight): carbon maximum 0.12, silicon maximum 1.00, manganese 5.50 to 7.50, phosphorus maximum 0.60 percent, sulfur maximum 0.030, nickel 3.50 to 5.50, chromium 16.00 to 18.00 and nitrogen not over 0.25 percent; heat treatment condition: if ¾ hardened material, the hardness range between 59 and 67 when measured by the Rockwell Hardness Scale using 30 kilogram force load according to ASTM-E18 or hardness range between 386 and 485 when measured by the Vickers Hardness Scale using 1 kilogram force load according to ASTM-E92; if fully annealed material, hardness less than 260 when measured by the Vickers Hardness Scale using 1 kilogram force load according to ASTM–E92; microstructure uniformly solution treated or cold worked; and edge camber 8 mm maximum per 1000 mm length; or

(F) ASL 804 flat or shaped wire certified for use in the production of spacer-expanders, the foregoing with chemical composition (percent by weight): carbon maximum 0.08, silicon maximum 1.00, manganese maximum 2.00, phosphorus maximum 0.040, sulfur maximum 0.030, nickel 8.00 to 10.50 and chromium 18.00 to 20.00; edge camber 8 mm maximum per 1,000 mm length; microstructure uniformly solution treated or cold worked;

(lxii) Flat-rolled tin mill products, designated as N–316 and known in industry usage as USIBOR uncoated hardenable manganese-boron steel, in coils measuring 624 mm to 1,600 mm in width; 0.6 mm to 3.0 mm in thickness; with chemical composition (percent by weight): carbon not over 0.25, manganese not over 1.35, sulfur not over 0.008, aluminum not over 0.06, silicon not over 0.35, chromium not over 0.30, nitrogen not over 0.009, boron not over 0.004 and titanium not over 0.05; yield strength of 280 to 360 MPa; tensile strength of 390 to 510 MPa; elongation of 21 percent;

(lxiii) Flat-rolled products, designated as N–426, annealed, at least 0.2 mm in thickness but not more than 2.5 mm in thickness; at least 600 mm in width but not more than 1300 mm in width; plated with tin and zinc by a hot-dipped coating process, with the zinc content of the plating not less than 7 percent but not more than 9 percent by weight; with the tin content of the plating not less than 85 percent by weight; with a coating weight of at least 20 g/m² but not more than 100 g/m² per one side; given a special after-treatment with the coating weight of the after-treatment between 10 and 60 mg/m² of chromium per one side or, if no chromium is included in the after-treatment, with a coating weight of 100 to 1,500 mg/m² per side; characterized by the absence of environmental loading substance (Pb); exhibiting no red dust after 480 hours under the Salt Spray Test specified by JIS Z2371; with a press formability demonstrating equivalent mechanical properties to the substrate; weldability such that the number of the continuous spot weld test is more than 200; and, when the material is drawn into a cylindrical cup with a diameter of 50 mm formed with a drawing ratio of 2.2, filled with 40 ml of deteriorated gasoline (a solution of regular gasoline, soured gasoline and 10 percent water, containing 1,000 ppm formic acid, 2000 ppm acetic acid, and 100 ppm chlorine in water phase), and exposed to a temperature of 45 °C for 4 weeks; with the eluted volume of the coating less than 100 mg;

(lxiv) Flat-rolled heavy gauge tinplate, with a gauge of 0.52 mm or more, flow-melted for electrical components, T 2, batch annealed, chemical composition according to ASTM A 623, roughness according to ASTM 7B and 7C bright; surface free from visible defects; the foregoing designated as N–499;

(lxv) Flat-rolled electrolytically tin coated steel, designated as X–039 and meeting the characteristics described below:

(A) Products having differential coating with 11.2 g/m² equivalent on the heavy side, with varied coating equivalents on the lighter side; with a continuous cast steel chemistry of type MR; with a surface finish of type 7B or 7C; with a surface passivation of 7.532 mg/m² of chromium applied as a cathodic dichromate treatment; with coil form having restricted oil film weights of 0.3 to 0.4 g/m² of type DOS–A oil; coil inside diameter ranging from 393.7 to 431.8 mm; coil outside diameter of a maximum 1,625.6 mm; with maximum coil weight of 11,340 kg; with temper/coating/dimension combination of: CA T–4 temper, 11.2/5.6 g/m² coating, 0.196 mm thickness (+5 percent/-8 percent) and 842.962 mm width (+3 percent/ − 8 percent);

(B) Products having differential coating with 11.2 g/m² equivalent on the heavy side, with varied coating equivalents on the lighter side; with a continuous cast steel chemistry of type MR; with a surface finish of type 7B or 7C; with a surface passivation of 7.532 mg/m² of chromium applied as a cathodic dichromate treatment; with coil form having restricted oil film weights of 0.3 to 0.4 g/m² of type DOS–A oil; coil inside diameter ranging from 393.7 to 431.8 mm; coil outside diameter of a maximum 1,625.6 mm; with maximum coil weight of 11,340 kg; and with temper/coating/dimension combination of: CA T–5 temper, 11.2/5.6 g/m² coating, 0.208 mm thickness (+5 percent/ − 8 percent) and 887.412 or 868.362 mm widths (+3 percent/ − 8 percent);

(C) Products having differential coating with 11.2 g/m² equivalent on the heavy side, with varied coating equivalents on the lighter side; with a continuous cast steel chemistry of type MR; with a surface finish of type 7B or 7C; with a surface passivation of 7.532 mg/m² of chromium applied as a cathodic dichromate treatment; with coil form having restricted oil film weights of 0.3 to 0.4 g/m² of type DOS–A oil; coil inside diameter ranging from 393.7 to 431.8 mm; coil outside diameter of a maximum 1,625.6 mm; with a maximum coil weight of 11,340 kg; and with temper/coating/dimension combination of: CA T–5 temper, 11.2/5.6g/m² coating, 0.300 mm thickness (+5 percent/ − 8 percent) and 776.287 or 903.287 mm widths (+3 percent/ − 8 percent);

(D) Products having differential coating with 11.2 g/m² equivalent on the heavy side, with varied coating equivalents on the lighter side; with a continuous cast steel chemistry of type MR; with a surface finish of type 7B or 7C, with a surface passivation of 7.532 mg/m² of chromium applied as a cathodic dichromate treatment; with coil form having restricted oil film weights of 0.3 to 0.4 g/m² of type DOS–A oil; coil inside diameter ranging from 393.7 to 431.8 mm; coil outside diameter of a maximum 1,625.6 mm; with a maximum coil weight of 11,340 kg; and with temper/coating/dimension combination of: CA T–4 temper, 11.2/2.8 g/m² coating, 0.196 mm thickness (+5 percent/ − 8 percent), and 893.762 mm or 841.375 mm or 836.612 mm widths (+3 percent/ − 8 percent);

(E) Products having differential coating with 11.2 g/m² equivalent on the heavy side, with varied coating equivalents on the lighter side; with a continuous cast steel chemistry of type MR; with a surface finish of type 7B or 7C, with a surface passivation of 7.532 mg/m² of chromium applied as a cathodic dichromate treatment; with coil form having restricted oil film weights of 0.3 to 0.4 g/m² of type DOS–A oil; coil inside diameter ranging from 393.7 to 431.8 mm; coil outside diameter of a maximum 1,625.6 mm; with a maximum coil weight of 11,340 kg; and with temper/coating/dimension combination of: DR–8 CA temper, 11.2/5.6 g/m² coating, 0.239 mm thickness (+5 percent/ − 8 percent), and 903.287 mm width (+3 percent/ − 8 percent); or

(F) Products having differential coating with 11.2 g/m² equivalent on the heavy side, with varied coating equivalents on the lighter side; with a continuous cast steel chemistry of type MR; with a surface finish of type 7B or 7C; with a surface passivation of 7.532 mg/m² of chromium applied as a cathodic dichromate treatment; with coil form having restricted oil film weights of 0.3 to 0.4 g/m² of type DOS–A oil; coil inside diameter ranging from 393.7 to 431.8 mm; coil outside diameter of a maximum 1,625.6 mm; with a

maximum coil weight of 11,340 kg; and with temper/coating/dimension combination of: DR–8 CA temper, 11.2/2.8 g/m² coating, 0.168 mm thickness (+5 percent/ − 8 percent), and 912.812 mm width (+3 percent/ − 8 percent);

(lxvi) Flat-rolled tin free steel, designated as X–061, laminated on one or both sides of the surface with a polyester film, consisting of two layers (an amorphous layer and an outer crystal layer) containing not more than the indicated amounts of the following environmental hormones: 1 mg/kg BADGE (Bisphenol A diglycidyl ether), 1 mg/kg BFDGE (Bisphenol F diglycidyl ether), and 3 mg/kg BPA (Bisphenol A);

(lxvii) Flat-rolled products designated as X–083 and meeting the characteristics described below:

(A) Electrolytic tin plate, designated as X–083 and entered in an aggregate annual quantity not to exceed 4,006 t during the 12-month period beginning on July 12, 2002 or July 12, 2003 or during the period July 12, 2004 through March 20, 2005, inclusive, the foregoing single reduced, 0.180 mm to 0.350 mm in thickness (70 to 135 base box weight), in temper designations of T–1BA, T–2BA, T–3BA or T–4CA; Type MR; No. 10 to No. 25 coating; with a 5C unmelted (matte) or 7C melted (stone) finish; width 1022.35 mm to 1174.75 mm; produced to ASTM 623–00 and A624–98; certified to be slit into two coils of equal widths, each coil having a widths of 508 mm or more but not over 609.6 mm, for use in manufacturing of engine gaskets, filters or pail bodies; or

(B) Flat-rolled products, double-reduced, electrolytically plated with tin and/or chromium; thickness not over 0.137 mm ± 5 percent; certified by the importer as manufactured to ASTM A623 type MR specifications; tensile strength of 552 to 572 MPa; manufactured through reduction on a DR temper mill following cold-rolling; and DR8-quality mechanical properties;

(lxviii) Welded pipes and tubes of iron or nonalloy steel, designated as N–319, the foregoing if in standard metric sizes and of square section then measuring 25 mm to 180 mm in diameter, with a wall thickness of 3 mm or more but not over 10 mm, or if of rectangular section with the smallest side measuring at least 25 mm and the largest side measures not over 200 mm; with chemical composition (percent by weight): carbon 0.22 maximum, manganese 1.6 maximum, silicon 0.55 maximum, phosphorus 0.04 maximum, sulfur 0.05 maximum and remainder iron;

(lxix) Welded structural pipes and tubes of alloy or nonalloy steel, designated as X–186, elliptically shaped, meeting ASTM A501, Chapter 10, points 10.4 and 10.5.

(lxx) Cold-rolled flat-rolled products designated as X–046, and meeting the characteristics described below:

(A) Products known in industry usage as ''Docol 800 DP'' or as ''Docol 115''; dual phase; in coils; minimum yield strength 496 MPa; minimum tensile strength 793 MPa; 9 percent minimum elongation; width 787 mm or more but not over 1,387 mm; thickness at least 0.5 mm but not more than 2.0 mm; with chemical composition (percent by weight): carbon 0.13, silicon 0.20, manganese 1.5, phosphorus 0.015 max, sulfur 0.002 max, niobium (columbium) 0.015 and aluminum 0.04;

(B) Product known in industry usage as ''Docol 140 DP'; dual phase; thickness at least 0.5 mm but not more than 2 mm; width 889 mm or more but not over 1,400 mm; minimum yield strength 552 MPa, minimum tensile strength 966 MPa; with chemical composition (percent by weight): carbon 0.13, silicon 0.20, manganese 1.5, phosphorus 0.020 maximum, sulfur 0.004 maximum, niobium (columbium) 0.015 and aluminum 0.04; and bendability of 1 times thickness inside radius for 90 degrees bend;

(C) Products known in industry usage as ''Docol 1000 DP'' or as ''Docol 145 DP'; dual phase; thickness at least 0.5 mm but not over 2 mm; width at least 787 mm but not over 1,400 mm; minimum yield strength 689 MPa; minimum tensile strength 1,000 MPa ; minimum elongation 5 percent; with chemical composition (percent by weight): carbon 0.15, silicon 0.20, manganese 1.5, phosphorus not over 0.015, sulfur 0.002 maximum, niobium (columbium) 0.015 and aluminum 0.04;

(D) Products known in industry usage as ''Docol 600 DL'' or as ''Docol 85''; dual phase; thickness 0.5 mm or more but not over 2 mm; width 780 mm or more but not over 1,400 mm; minimum yield strength of 345 MPa; minimum tensile strength of 586 MPa; bendability of 0 times thickness for 180 degree bend; with chemical composition (percent by weight): carbon 0.11, silicon 0.020, manganese 0.70, phosphorus not over 0.05, sulfur not over 0.01 and aluminum 0.04;

(E) Products known in industry usage as ''Docol 800 DL'' or as ''Docol 115''; dual phase; in coils; minimum yield strength 386 MPa; minimum tensile strength 793 MPa; minimum elongation 14 percent; width 787 mm or more but not over 1,400 mm; thickness 0.5 mm or more but not over 2 mm; with chemical composition (percent by weight): carbon 0.14, silicon 0.20, manganese 1.7, phosphorus not over 0.015, sulfur not over 0.02, niobium (columbium) 0.015 and aluminum 0.04; or

(F) Products known in industry usage as ''Docol 600 DP'' or as ''Docol 85 DP''; dual phase; thickness 0.5 mm or more but not over 2 mm; width 780 mm or more but not over 1,400 mm; minimum yield strength of 345 MPa; minimum tensile strength of 586 MPa; minimum elongation of 17 percent; bendability of 0 times thickness for 180 degree bend; with chemical composition (percent by weight): carbon 0.11, silicon 0.020, manganese 0.70, phosphorus not over 0.05, sulfur not more than 0.01 and aluminum 0.04;

(lxxi) Hot-rolled, flat-rolled products, designated as X–083 or X–089, the foregoing with chemical composition (percent by weight): carbon 0.10 to 0.20, manganese 0.50 to 1.00, phosphorus not more than 0.02, sulphur not more than 0.005, silicon 0.20 to 0.50, chromium 0.40 to 0.70, copper 0.05 to 0.40, nickel 0.05 to 0.30, molybdenum 0.05 to 0.50, vanadium not over 0.02, niobium (columbium) not over 0.05, titanium not more than 0.03, with total combined vanadium, niobium (columbium) and titanium content of 0.01 to 0.07, aluminum 0.01 to 0.05 and containing iron; minimum tensile strength 745 MPa; minimum yield strength 606 MPa; and elongation of at least 18 percent;

(lxxii)Flat-rolled steel products, of a thickness of 0.5 mm or more but not over 2 mm, designated as X–120 and meeting the characteristics described below:

(A) Cold-rolled dual phase products, with a width of 780 mm or more but not over 1,600 mm; minimum yield strength 345 MPa; minimum tensile strength 586 MPa; minimum elongation 17 percent; bendability of zero times thickness for 180 degree bend; with chemical composition (percent by weight): carbon 0.11, silicon 0.20, manganese 0.70, phosphorus not over 0.05, sulfur not over 0.01 and aluminum 0.04;

(B) Cold-rolled dual phase products, with a width of 780 mm but not over 1,600 mm; minimum yield strength 276 MPa; minimum tensile strength 586 MPa; minimum elongation 21 percent; bendability of zero times thickness for 180 degree bend; with chemical composition (percent by weight): carbon 0.10, silicon 0.40, manganese 1.50, phosphorus not over 0.01, sulfur not over 0.01 and aluminum 0.04;

(C) Cold-rolled dual phase products, with a width of 780 mm or more but not over 1,600 mm; minimum yield strength 496 MPa; minimum tensile strength 793 MPa; minimum elongation 9 percent; bendability of 1 times thickness for 180 degree bend; with chemical composition (percent by weight): carbon 0.13, silicon 0.20, manganese 1.50, phosphorus not over 0.02, sulfur not over 0.002, niobium (columbium) 0.015 and aluminum 0.04;

(D) Cold-rolled dual phase products, with a width of 780 mm or more but not over 1,600 mm; minimum yield strength 689 MPa; minimum tensile strength 1,000 MPa; minimum elongation 6 percent; bendability of 3 times thickness for 180 degree bend; with chemical composition (percent by weight): carbon 0.15, silicon 0.20, manganese 1.50, phosphorus not over 0.015, sulfur not over 0.002, niobium (columbium) 0.015 and aluminum 0.04;

(E) Cold-rolled dual phase products, with a width of 875 mm or more but not over 1,275 mm; minimum yield strength 945 MPa; minimum tensile strength 1,207 MPa; minimum elongation 4 percent; bendability of 4 times thickness for 180 degree bend; with chemical composition (percent by weight): carbon 0.11, silicon 0.20, manganese 1.60, phosphorus not over 0.015, sulfur not over 0.002 and aluminum 0.04;

(F) Cold-rolled dual phase products, with a width of 875 mm or more but not over 1,275 mm; minimum yield strength 1,151; minimum tensile strength 1,314 MPa; minimum elongation 4 percent; bendability of 3 times thickness for 180 degree bend; with chemical composition (percent by weight): carbon 0.17, silicon 0.50, manganese 1.60 percent, phosphorus not over 0.015, sulfur not over 0.002, niobium (columbium) 0.015 and aluminum 0.04; or

(G) Corrosion resistant flat-rolled products, with a width of 780 mm or more but not over 1,600 mm; minimum yield strength 689 MPa; minimum tensile strength 896 MPa; minimum elongation 5 percent; bendability

of 2 times thickness for 180 degree bend; with chemical composition (percent by weight): carbon 0.13, silicon 0.50, manganese 1.20 and phosphorus not over 0.02;

(H) Cold-rolled dual phase products, with minimum Brinell hardness rating 450 Hb; width 875 mm or more but not over 1,275 mm; minimum yield strength 1138 MPa; minimum tensile strength 1,413 MPa; minimum elongation 3 percent; bendability of 4 times thickness for 180 degree bend; with chemical composition (percent by weight): carbon 0.17, silicon 0.50, manganese 1.60, phosphorus not over 0.01, sulfur not over 0.01, niobium (columbium) 0.015 and aluminum 0.04;

(lxxiii) Flat-rolled products, coated with zinc-aluminum alloy consisting of 95 percent zinc and 5 percent aluminum by weight, known in industry usage as ''RAGALR® GALFAN''; thickness not over 0.75 mm; width 1,220 mm or more; the foregoing designated as X–048;

(lxxiv) Products referred to as ''Type 2 Z-bars'', the foregoing used in the manufacture of end sills for railway tank cars; containing vanadium; conforming to ASTM Standard A–572–50; in the approximate form of the letter ''Z,'' with one leg measuring approximately 180 mm and the opposite leg measuring approximately 102 mm; the foregoing designated as X–113;

(lxxv) Flat-rolled products, designated as X–022 and meeting the characteristics described below:

(A) Thermomechanically (TMCP) rolled products, entered in an aggregate annual quantity not to exceed 2,000 t during the 12-month period beginning on July 12, 2002 or July 12, 2003 or during the period July 12, 2004 through March 20, 2005, inclusive; the foregoing meeting the following specifications: (a) As prequalified by crack tip opening test (CTOD) and/or Charpy v-notch (CVN) testing in the weld heat affected zone for improved weldability under API RP2Z; and either (b)(i) BS 7191, EN 10225 or equivalent specification, or (ii) that are ordered with weldability qualifications by CTOD testing at temperatures below −15 °C; with goods entered under clauses (a) and (b)(ii) of this subdivision to be certified by the importer as complying therewith; or

(B) Thermomechanically (TMCP) rolled products, entered in an aggregate annual quantity not to exceed 1,000 t during the 12-month period beginning on July 12, 2002 or July 12, 2003 or during the period July 12, 2004 through March 20, 2005, inclusive; meeting the following specifications: (a) With prequalification by welded crack tip opening test (CTOD) or Charpy v-notch (CVN) testing in the weld head affected zone for improved weldability under API RP2Z; either (b)(i) BS 7191, EN 10225 or equivalent specification, or (ii) that are ordered with weldability qualifications by welded CTOD testing at temperatures below −15 °C; and (c) having a minimum yield strength of 413 MPa; with goods entered under clauses (a) and (b)(ii) of the foregoing to be certified by the importer as complying therewith;

(lxxvi) Flat-rolled products, quenched and tempered, with minimum Brinell hardness of 600 HB; thickness 3 mm or more but not over 51 mm; width not over 3,350 mm; grain refined; surface treated with a low zinc silicate primer; formatted with a square edge; free of scale; certified by the importer as guaranteed to a thickness tolerance of 1/3 of ASTM standards and guaranteed to a flatness tolerance of 4 mm/m or better; the foregoing designated as X–088;

(lxxvii) Martensitic products of stainless steel, quenched and tempered, known in industry usage as AF.913 QT; of round cross section with diameter not over 305 mm; with chemical composition (percent by weight): Carbon not over 0.02, chromium 12.0 to 15.0, nickel 4.0 to 7.0, molybdenum 1.5 to 2.0 and nitrogen 0.06 to 0.12; certified by the importer as produced to ASTM A276, ASTM A473, ASTM A479, ASTM A565, API6A, or NACE MR0175; the foregoing designated as X–035;

(lxxix) Stainless steel wire designated as X–059 and meeting the characteristics described below:

(A) Flat wire, work hardened (3/4 hard) or annealed; with chemical composition (percent by weight): carbon not over 0.15, manganese 5.5 to 7.5, chromium 16.0 to 18.0 and nickel 3.5 to 5.5; tensile strength, work hardened (3/4 hard) condition: 1,172 to 1,345 N/mm^2; tensile strength, annealed condition: not over 1,035 N/mm^2; or

(B) Hardenable, surgical needle wire, Grade 4C27A; with chemical composition (percent by weight): carbon not over 0.30, silicon not over 1.00, manganese not over 1.75, phosphorus not over 0.030, sulfur not over 0.25, chromium 12.0 to 14.0, nickel not over 0.80 percent and molybdenum not over 1.20 percent;''

4. In order to administer the exclusions set forth in U.S. note 11(b), as modified by this Annex, subheading 9903.73.00 is redesignated as 9903.73.01 and the following new subheadings are inserted in numerical sequence, with conforming changes set forth following the last such new subheading:

	[Flat-rolled...]			
	[Goods...]			
''9903.72.55	Enumerated in U.S. note 11(b)(xx)(A) to this subchapter	No change	No change	No change
9903.72.97	Enumerated in U.S. note 11(b)(xxv)(B) to this subchapter and designated as X–010, if entered in an aggregate annual quantity not to exceed 250 t.	No change	No change	No change
9903.72.98	Enumerated in U.S. note 11(b)(xxv)(C) to this subchapter and designated as X–010, if entered in an aggregate annual quantity not to exceed 163 t.	No change	No change	No change
9903.72.99	Enumerated in U.S. note 11(b)(xxv)(E) to this subchapter and designated as X–010, if entered in an aggregate annual quantity not to exceed 340 t.	No change	No change	No change
9903.73.00	Enumerated in U.S. note 11(b)(xxxi)(B) to this subchapter and designated as X–083, if entered in an annual aggregate quantity not to exceed 12,000 t.	No change	No change	No change

Conforming changes: Subheading 9903.72.86 is modified by deleting ''11(b)(xxv)'' and by inserting in lieu thereof ''11(b)(xxv)(A) and (D)'', and subheading 9903.72.93 is modified by deleting ''11(b)(xxxi)'' and by inserting in lieu thereof ''11(b)(xxxi)(A)''.

5. In order to provide for the new exclusions added in item 6 of this Annex, the following conforming changes are made in existing HTS subheadings:

A. The article description of subheading 9903.72.57 is modified by inserting at the end thereof '', as described in subheadings 9903.74.38 through 9903.74.45''.

B. The article description of subheading 9903.72.78 is modified by inserting at the end thereof '', as described in subheadings 9903.74.61 through 9903.74.81''.

C. The article description of subheading 9903.73.01 (as redesignated by this notice) is modified by inserting at the end thereof '', as described in subheadings 9903.75.15 through 9903.75.32''.

D. The article description of subheading 9903.73.18 is modified by inserting at the end thereof '', as described in subheadings 9903.76.00 through 9903.76.08''.

E. The article description of subheading 9903.73.35 is modified by inserting at the end thereof '', as described in subheadings 9903.76.26 through 9903.76.29''.

F. The article description of subheading 9903.73.48 is modified by inserting at the end thereof '', as described in subheadings 9903.76.51 through 9903.76.61''.

G. The article description of subheading 9903.73.55 is modified by inserting at the end thereof '', as described in subheadings 9903.76.86 through 9903.76.90''.

H. The article description of subheading 9903.73.82 is modified by inserting at the end thereof '', as described in subheadings 9903.77.30 through 9903.77.33''.

I. The article description of subheading 9903.74.01 is modified by inserting at the end thereof '', as described in subheadings 9903.77.61 through 9903.77.67''.

J. The article description of subheading 9903.74.12 is modified by inserting at the end thereof '', as described in subheading 9903.77.85''.

K. The article description of subheading 9903.74.18 is modified by inserting at the end thereof '', as described in subheadings 9903.78.10 through 9903.78.13''.

6. In order to administer the new exclusions added to U.S. note 11(c) to this subchapter, the following new subheadings are inserted in subchapter III of chapter 99 in numerical sequence:

	''Goods excluded from the application of relief under U.S. note 11(c) to this subchapter:			
9903.74.38	Enumerated in U.S. note 11(c)(x) to this subchapter	No change	No change	No change
9903.74.39	Enumerated in U.S. note 11(c)(lii) to this subchapter	No change	No change	No change
9903.74.40	Enumerated in U.S. note 11(c)(liii) to this subchapter	No change	No change	No change
9903.74.41	Enumerated in U.S. note 11(c)(liv) to this subchapter	No change	No change	No change
9903.74.42	Enumerated in U.S. note 11(c)(lv) to this subchapter, and entered in an aggregate annual quantity not to exceed 75,000 t.	No change	No change	No change
9903.74.43	Enumerated in U.S. note 11(c)(lxxv)(A) to this subchapter, and entered in an aggregate annual quantity not to exceed 2,000 t.	No change	No change	No change
9903.74.44	Enumerated in U.S. note 11(c)(lxxv)(B) to this subchapter, and entered in an aggregate annual quantity not to exceed 1,000 t.	No change	No change	No change
9903.74.45	Enumerated in U.S. note 11(c)(lxxvi) to this subchapter	No change	No change	No change
9903.74.61	Enumerated in U.S. note 11(c)(v) to this subchapter	No change	No change	No change
9903.74.62	Enumerated in U.S. note 11(c)(vi) to this subchapter	No change	No change	No change
9903.74.63	Enumerated in U.S. note 11(c)(vii) to this subchapter	No change	No change	No change
9903.74.64	Enumerated in U.S. note 11(c)(viii) to this subchapter	No change	No change	No change
9903.74.65	Enumerated in U.S. note 11(c)(ix) to this subchapter, and entered in an aggregate annual quantity not to exceed 4,800 t.	No change	No change	No change
9903.74.66	Enumerated in U.S. note 11(c)(xviii)(A) to this subchapter, and entered in an aggregate annual quantity not to exceed 1,953 t.	No change	No change	No change
9903.74.67	Enumerated in U.S. note 11(c)(xviii)(B) to this subchapter, and entered in an aggregate annual quantity not to exceed 1,000 t.	No change	No change	No change
9903.74.68	Enumerated in U.S. note 11(c)(xviii)(C) to this subchapter, and entered in an aggregate annual quantity not to exceed 1,000 t.	No change	No change	No change
9903.74.69	Enumerated in U.S. note 11(c)(xix) to this subchapter, and entered in an aggregate annual quantity not to exceed 3,850 t..	No change	No change	No change
9903.74.70	Enumerated in U.S. note 11(c)(xx)(A) or (B) to this subchapter	No change	No change	No change
9903.74.71	Enumerated in U.S. note 11(c)(xx)(C) to this subchapter, and entered in an aggregate annual quantity not to exceed 439 t.	No change	No change	No change
9903.74.72	Enumerated in U.S. note 11(c)(xx)(D) to this subchapter, and entered in an aggregate annual quantity not to exceed 432 t.	No change	No change	No change
9903.74.73	Enumerated in U.S. note 11(c)(xx)(E) to this subchapter, and entered in an aggregate annual quantity not to exceed 750 t.	No change	No change	No change
9903.74.74	Enumerated in U.S. note 11(c)(xlv) to this subchapter	No change	No change	No change
9903.74.75	Enumerated in U.S. note 11(c)(xlvi) to this subchapter	No change	No change	No change
9903.74.76	Enumerated in U.S. note 11(c)(xlvii) to this subchapter	No change	No change	No change
9903.74.77	Enumerated in U.S. note 11(c)(xlviii) to this subchapter, and entered in an aggregate annual quantity not to exceed 20,000 t.	No change	No change	No change
9903.74.78	Enumerated in U.S. note 11(c)(xlix) to this subchapter	No change	No change	No change
9903.74.79	Enumerated in U.S. note 11(c)(l) to this subchapter	No change	No change	No change
9903.74.80	Enumerated in U.S. note 11(c)(li) to this subchapter	No change	No change	No change
9903.74.81	Enumerated in U.S. note 11(c)(lxxi) to this subchapter	No change	No change	No change
9903.75.15	Enumerated in U.S. note 11(c)(i) to this subchapter	No change	No change	No change
9903.75.16	Enumerated in U.S. note 11(c)(ii) to this subchapter	No change	No change	No change
9903.75.17	Enumerated in U.S. note 11(c)(iii) to this subchapter	No change	No change	No change
9903.75.18	Enumerated in U.S. note 11(c)(xxvi) to this subchapter	No change	No change	No change
9903.75.19	Enumerated in U.S. note 11(c)(xxvii) to this subchapter	No change	No change	No change
9903.75.20	Enumerated in U.S. note 11(c)(xxviii)(A) to this subchapter, and entered in an aggregate annual quantity not to exceed 6,395 t.	No change	No change	No change
9903.75.21	Enumerated in U.S. note 11(c)(xxviii)(B) to this subchapter, and entered in an aggregate annual quantity not to exceed 1,599 t.	No change	No change	No change
9903.75.22	Enumerated in U.S. note 11(c)(xxviii)(C) to this subchapter	No change	No change	No change
9903.75.23	Enumerated in U.S. note 11(c)(xxix)(A) to this subchapter, and entered in an aggregate annual quantity not to exceed 850 t.	No change	No change	No change
9903.75.24	Enumerated in U.S. note 11(c)(xxix)(B) to this subchapter, and entered in an aggregate annual quantity not to exceed 250 t.	No change	No change	No change
9903.75.25	Enumerated in U.S. note 11(c)(xxx)(A) to this subchapter, and entered in an aggregate annual quantity not to exceed 5,534 t.	No change	No change	No change
9903.75.26	Enumerated in U.S. note 11(c)(xxx)(B) to this subchapter, and entered in an aggregate annual quantity not to exceed 100 t.	No change	No change	No change
9903.75.27	Enumerated in U.S. note 11(c)(xxx)(C) through (J), inclusive, to this subchapter	No change	No change	No change
9903.75.28	Enumerated in U.S. note 11(c)(xxxi)(A) to this subchapter, and entered in an aggregate annual quantity not to exceed 2,467.6 t.	No change	No change	No change
9903.75.29	Enumerated in U.S. note 11(c)(xxxi)(B) to this subchapter, and entered in an aggregate annual quantity not to exceed 1,161.2 t.	No change	No change	No change
9903.75.30	Enumerated in U.S. note 11(c)(lxii) to this subchapter	No change	No change	No change
9903.75.31	Enumerated in U.S. note 11(c)(lxx) to this subchapter	No change	No change	No change
9903.75.32	Enumerated in U.S. note 11(c)(lxxii)(A) through (F) and (H) to this subchapter	No change	No change	No change
9903.75.33	Enumerated in U.S. note 11(c)(i)(A) to this subchapter, and entered in an aggregate annual quantity not to exceed 45,000 t.	No change	No change	No change
9903.75.34	Enumerated in U.S. note 11(c)(i)(B) to this subchapter, and entered in an aggregate annual quantity not to exceed 5,700 t.	No change	No change	No change
9903.75.35	Enumerated in U.S. note 11(c)(i)(C) to this subchapter, and entered in an aggregate annual quantity not to exceed 17,500 t.	No change	No change	No change
9903.76.00	Enumerated in U.S. note 11(c)(xxxii) to this subchapter	No change	No change	No change
9903.76.01	Enumerated in U.S. note 11(c)(xxxiii) to this subchapter	No change	No change	No change
9903.76.02	Enumerated in U.S. note 11(c)(xxxiv) to this subchapter	No change	No change	No change
9903.76.03	Enumerated in U.S. note 11(c)(xxxv) to this subchapter	No change	No change	No change
9903.76.04	Enumerated in U.S. note 11(c)(xxxvi) to this subchapter	No change	No change	No change
9903.76.05	Enumerated in U.S. note 11(c)(lxiii) to this subchapter	No change	No change	No change
9903.76.06	Enumerated in U.S. note 11(c)(lxvi) to this subchapter	No change	No change	No change
9903.76.07	Enumerated in U.S. note 11(c)(lxxii)(G) to this subchapter	No change	No change	No change
9903.76.08	Enumerated in U.S. note 11(c)(lxxiii) to this subchapter	No change	No change	No change
9903.76.26	Enumerated in U.S. note 11(c)(xv) to this subchapter	No change	No change	No change
9903.76.27	Enumerated in U.S. note 11(c)(lxiv) to this subchapter	No change	No change	No change

9903.76.28	Enumerated in U.S. note 11(c)(lxv) to this subchapter	No change	No change	No change
9903.76.29	Enumerated in U.S. note 11(c)(lxvii) to this subchapter, and entered in an aggregate quantity not to exceed 4,006 t.	No change	No change	No change
9903.76.30	Enumerated in U.S. note 11(c)(lxiii) to this subchapter	No change	No change	No change
9903.76.51	Enumerated in U.S. note 11(c)(iv)(A) to this subchapter, and entered in an aggregate annual quantity not to exceed 2,100 t.	No change	No change	No change
9903.76.52	Enumerated in U.S. note 11(c)(iv)(B) to this subchapter	No change	No change	No change
9903.76.53	Enumerated in U.S. note 11(c)(xxxvii) to this subchapter	No change	No change	No change
9903.76.54	Enumerated in U.S. note 11(c)(xxxviii) to this subchapter	No change	No change	No change
9903.76.55	Enumerated in U.S. note 11(c)(xxxix) to this subchapter, and entered in an aggregate annual quantity not to exceed 30,000 t.	No change	No change	No change
9903.76.56	Enumerated in U.S. note 11(c)(xl) to this subchapter	No change	No change	No change
9903.76.57	Enumerated in U.S. note 11(c)(xli) to this subchapter	No change	No change	No change
9903.76.58	Enumerated in U.S. note 11(c)(xlii) to this subchapter	No change	No change	No change
9903.76.59	Enumerated in U.S. note 11(c)(xliii) to this subchapter	No change	No change	No change
9903.76.60	Enumerated in U.S. note 11(c)(xliv) to this subchapter	No change	No change	No change
9903.76.61	Enumerated in U.S. note 11(c)(lxxiv) to this subchapter	No change	No change	No change
9903.76.86	Enumerated in U.S. note 11(c)(xxi) to this subchapter	No change	No change	No change
9903.76.87	Enumerated in U.S. note 11(c)(xxii) to this subchapter	No change	No change	No change
9903.76.88	Enumerated in U.S. note 11(c)(xxiii) to this subchapter	No change	No change	No change
9903.76.89	Enumerated in U.S. note 11(c)(xxiv) to this subchapter	No change	No change	No change
9903.76.90	Enumerated in U.S. note 11(c)(xxv) to this subchapter	No change	No change	No change
9903.77.30	Enumerated in U.S. note 11(c)(xvi) to this subchapter	No change	No change	No change
9903.77.31	Enumerated in U.S. note 11(c)(xvii) to this subchapter	No change	No change	No change
9903.77.32	Enumerated in U.S. note 11(c)(lxviii) to this subchapter	No change	No change	No change
9903.77.33	Enumerated in U.S. note 11(c)(lxix) to this subchapter	No change	No change	No change
9903.77.61	Enumerated in U.S. note 11(c)(xi) to this subchapter, and entered in an aggregate annual quantity not to exceed 63 t.	No change	No change	No change
9903.77.62	Enumerated in U.S. note 11(c)(xii) to this subchapter	No change	No change	No change
9903.77.63	Enumerated in U.S. note 11(c)(lvi) to this subchapter	No change	No change	No change
9903.77.64	Enumerated in U.S. note 11(c)(lvii) to this subchapter	No change	No change	No change
9903.77.65	Enumerated in U.S. note 11(c)(lviii) to this subchapter	No change	No change	No change
9903.77.66	Enumerated in U.S. note 11(c)(lix) to this subchapter	No change	No change	No change
9903.77.67	Enumerated in U.S. note 11(c)(lxxvii) to this subchapter	No change	No change	No change
9903.77.85	Enumerated in U.S. note 11(c)(v) to this subchapter	No change	No change	No change
9903.78.10	Enumerated in U.S. note 11(c)(xiii) to this subchapter	No change	No change	No change
9903.78.11	Enumerated in U.S. note 11(c)(lx) to this subchapter	No change	No change	No change
9903.78.12	Enumerated in U.S. note 11(c)(lxi) to this subchapter	No change	No change	No change
9903.78.13	Enumerated in U.S. note 11(c)(lxxix) to this subchapter	No change	No change	No change''

[FR Doc. 02–17562 Filed 7–11–02; 8:45 am]

BILLING CODE 3190–01–P

OFFICE OF THE UNITED STATES TRADE REPRESENTATIVE

Reinstatement of Treatment on Government Procurement of Products From Honduras

AGENCY: Office of the United States Trade Representative.

ACTION: Reinstatement of treatment on government procurement of products from Honduras.

Under the authority delegated to me by the President in section 1–201 of Executive Order 12260 of December 31, 1980, I hereby direct that products of Honduras shall be treated as eligible products for purposes of section 1–101 of the Executive Order. Such treatment shall not apply to products originating in Honduras that are excluded from duty free treatment under 19 U.S.C. 2703(b). Decisions on the continued application of this treatment will be based on ongoing evaluation of Honduras' efforts to improve domestic procurement practices, its support for relevant international initiatives, such as those in the World Trade Organization (WTO) Working Group on Transparency in Government Procurement and the Free Trade Area of the Americas (FTAA) Negotiating Group on Government Procurement. Performance with respect to the foregoing factors will be analyzed annually in September, although changes in the application of this treatment may be made at any time. Notice of any changes in this treatment with respect to any beneficiary will be published in the **Federal Register**.

Robert B. Zoellick,

United States Trade Representative.

[FR Doc. 02–17563 Filed 7–11–02; 8:45 am]

BILLING CODE 3190–01–M

DEPARTMENT OF TRANSPORTATION

Coast Guard

[USCG–2002–12741]

Great Lakes Pilotage Advisory Committee

AGENCY: Coast Guard, DOT.

ACTION: Notice of meeting.

SUMMARY: The Great Lakes Pilotage Advisory Committee (GLPAC) will meet to discuss various issues relating to pilotage on the Great Lakes. The meeting will be open to the public.

DATES: GLPAC will meet on Monday, July 29, 2002, from 1:30 p.m. to 5 p.m. and on Tuesday, July 30, 2002, from 9 a.m. to 4 p.m. The meeting may close early if all business is finished. Written material and requests to make oral presentations should reach the Coast Guard on or before July 22, 2002. Requests to have a copy of your material distributed to each member of the committee should reach the Coast Guard on or before June 22, 2002.

ADDRESSES: GLPAC will meet in Deck Room B of the Maritime Institute of Technology, 5700 Hammonds Ferry Road, Linthicum Heights, Maryland. Send written material and requests to make oral presentations to Margie Hegy, Commandant (G–MW), U.S. Coast Guard Headquarters, 2100 Second Street SW., Washington, DC 20593–0001. This notice is available on the Internet at *http://dms.dot.gov.*

FOR FURTHER INFORMATION CONTACT: Margie Hegy, Executive Director of GLPAC, telephone 202–267–0415, fax 202–267–4700.

SUPPLEMENTARY INFORMATION: Notice of the meeting is given under the Federal Advisory Committee Act, 5 U.S.C. App. 2.

Agenda of Meeting

The agenda includes the following:

(1) Automatic Identification System (AIS) Technology and Training Requirements.

(2) Update on the Great Lakes Pilotage Office Relocation Study.

(3) Update on Bridge Hour Study.

Procedural

The meeting is open to the public. Please note that the meeting may close early if all business is finished. At the Chair's discretion, members of the public may make oral presentations during the meeting. If you would like to make an oral presentation at the meeting, please notify the Executive Director no later than July 25, 2002. Written material for distribution at the meeting should reach the Coast Guard no later than July 25, 2002. If you would like a copy of your material distributed to each member of the committee in advance of the meeting, please submit 10 copies to Margie Hegy at the address in the **ADDRESSES** section no later than July 22, 2002.

Information on Services for Individuals With Disabilities

For information on facilities or services for individuals with disabilities or to request special assistance at the meeting, contact the Executive Director as soon as possible.

Dated: July 9, 2002.

J.P. Brusseau,

Captain, Coast Guard, Acting Assistant Commandant for Marine, Safety, Security, and Environmental Protection.

[FR Doc. 02–17565 Filed 7–9–02; 4:03 pm]

BILLING CODE 4910–15–U

DEPARTMENT OF TRANSPORTATION

Federal Aviation Administration

Notice of Opportunity for Public Comment on Surplus Property Release at George M. Bryan Field Airport, Starkville, MS

AGENCY: Federal Aviation Administration (FAA), DOT.

ACTION: Notice of intent to rule on land release request.

SUMMARY: Under the provisions of Title 49, U.S.C. Section 47153(c), notice is being given that the FAA is considering a request from the city of Starkville to waive the requirement that a 4.5 acre parcel of surplus property, located at the George M. Bryan Field Airport, be used for aeronautical purposes.

DATES: Comments must be received on or before August 12, 2002.

ADDRESSES: Comments on this notice may be mailed or delivered in triplicate to the FAA at the following address: Jackson Airports District Office, 100 West Cross Street, Suite B, Jackson, MS 39208–2307.

In addition, one copy of any comments submitted to the FAA must be mailed or delivered to The Honorable Mack D. Rutledge, Mayor of Starkville, Mississippi at the following address: City Hall, 101 Lampkin Street, Starkville, MS 38902–0310.

FOR FURTHER INFORMATION CONTACT: David Shumate, Program Manager, Jackson Airports District Office, 100 West Cross Street, Suite B, Jackson, MS 39208–2307, (601) 664–9882. The land release request may be reviewed in person at this same location.

SUPPLEMENTARY INFORMATION: The FAA is reviewing a request by city of Starkville, MS to release 4.5 acres of surplus property at the George M. Bryan Field Airport. The property will be sold in part or in whole commercial or industrial users for fair market value. The property is located on the West side of the airport.

Any person may inspect the request in person at the FAA office listed above under **FOR FURTHER INFORMATION CONTACT**. In addition, any person may, upon request, inspect the request, notice and other documents germane to the request in person at the city of Starkville, Mississippi.

Issued in Jackson, Mississippi on July 2, 2002.

Wayne Atkinson,

Manager, Jackson Airports District Office, Southern Region.

[FR Doc. 02–17575 Filed 7–11–02; 8:45 am]

BILLING CODE 4910–13–M

DEPARTMENT OF TRANSPORTATION

Federal Aviation Administration

Proposed Technical Standard Order—TSO–C39c, Aircraft Seats and Berths

AGENCY: Federal Aviation Administration, DOT.

ACTION: Notice of availability and requests for public comments.

SUMMARY: This notice announces the availability of and request comments on a proposed Technical Standard Order (TSO) C39c, Aircraft Seats and Berths. The proposed TSO–C39c, Aircraft Seats and Berths, prescribes the minimum performance standard (MPS) that a aircraft seat and berth must meet in order to bear the TSO number on its identification plate. Proposed TSO–C39c provides standards for seating systems in transport, rotorcraft, normal and utility airplanes, and acrobatic.

DATES: Comments must be received on or before September 15, 2002.

ADDRESSES: Send all comments on the proposed technical standard order to: Federal Aviation Administration, Aircraft Certification Service, Aircraft Engineering Division, Technical Programs and Continued Airworthiness Branch, AIR–120, ATTN: Bobbie J. Smith, Room 815, 800 Independence Avenue, SW., Washington, DC 20591. Or, deliver comments to: Federal Aviation Administration, Room 815, 800 Independence Avenue, SW., Washington, DC 20591.

FOR FURTHER INFORMATION CONTACT: Ms. Bobbie J. Smith, AIR–120, Aircraft Certification Service, Aircraft Engineering Division, Federal Aviation Administration, 800 Independence Avenue, SW., Washington, DC 20591, Telephone 202–267–9546.

SUPPLEMENTARY INFORMATION:

Comment Invited

Interested persons are invited to comment on the proposed TSO listed in this notice by submitting such written data, views, or arguments as they desire to the above specified address. Comments received on the proposed TSO may be examined, before and after the comment closing date, in Room 815, FAA Headquarters Building (FOB–10A), 800 Independence Avenue, SW., Washington, DC 20591, weekdays except Federal holidays, between 8:30 a.m. and 4:30 p.m. All communications received on or before the closing date for comments specified above will be considered by the Director of the Aircraft Certification Service before issuing the final TSO.

Background

This TSO is proposed to provide minimum performance standards for aircraft seats and berths.

TSO–C39 was originally developed to provide a standard that would serve as a basis for FAA approval to meet the emergency landing loads specified in the airworthiness requirements. Specifically TSO–C39 replaced TSO–C25 as the seat standards when the certification basis for aircraft changed from including a forward crash load of 6g's to 9g's.

TSO–C39 incorporated NAS 809 to provide the criteria that cold be used to demonstrate the strength of aircraft seats to the 9g-standard. In 1988, a new requirement for seat strength and performance, commonly called the 16g rule, was promulgated in the Federal Aviation Regulation. The 16g rule was fundamentally different from previous emergency landing conditions as it

included dynamic testing of the seat and occupant protection criteria.

The SAE SEAT Committee was tasked with developing a standard that would provide a basis for meeting the 16g rule. SAE published AS 8049, that was incorporated into TSO–C127 in 1992. TSO–C127a was issued in 1998 after AS 8049A was published to further refine the dynamic seat standard. AS 8049 and AS 8049A contained the criteria for dynamic seats and still included criteria for static strength and design requirements.

Although seats were still being produced to the static 9g-standard in TSO–C39, the seat industry began to increase its production of TSO–C127 and TSO–C127a seats. So there were then, and currently still are, two standards—NAS 809 and AS8049—that addressed static 9g requirements.

In 2000, the FAA and industry formed a team to investigate and implement ways to streamline seat certification. This group recognized that two different standards addressing static strength and design considerations for seats was making the certification process more complicated than it needed to be. Therefore it was proposed that a new revision to TSO–C39 be issued to standardize the state criteria portion of the two standards.

It was decided that this could be successfully accomplished by referencing the static portion of AS 8049A for the proposed revision to TSO–C39. This will bring TSO–C39 in alignment with TSO–C127 and reflect the way industry currently uses the two standards. Most seat manufacturers are already using the static portion of AS 8049A as a basis for meeting airworthiness requirements not covered by the criteria in TSO–C39. Including the assessment under the TSO program will improve certification schedules. Additionally, AS 8049A continues to be reviewed and updated, and changes to AS 8049 will cover TSO–C127 seats as well as TSO–C39 seats.

How To Obtain Copies

A copy of the proposed TSO may be obtained via the information contained in section titled **FOR FURTHER INFORMATION CONTACT**, or the Internet at *http://www.faa.gov/certification/aircraft/TSOA.htm.*

Issued in Washington, DC on July 8, 2002.

David Hempe,

Manager, Aircraft Engineering Division Aircraft Certification Service.

[FR Doc. 02–17576 Filed 7–11–02; 8:45 am]

BILLING CODE 4910–13–M

DEPARTMENT OF TRANSPORTATION

Federal Highway Administration

Environmental Impact Statement; Dubuque County, IA

AGENCY: Federal Highway Administration (FHWA), DOT.

ACTION: Notice of intent (Cancellation).

SUMMARY: The FHWA is issuing this notice to advise the public that the Notice of Intent (NOI) to prepare an Environmental Impact Statement a9EIS) as it relates to National Environmental Policy Act of 1969 (NEPA) for the proposed U.S. 20 Capacity Improvement Study in Dubuque County, Iowa is canceled. The NOI was originally published in the **Federal Register** on April 23, 2001. The cancellation is based on budget considerations for this project.

FOR FURTHER INFORMATION CONTACT: Manu M. Chacko, Transportation Engineer, FHWA, 105 6th Street, Ames, IA 50010–6337, (515) 233–7307. James P. Rost, Director, Office of Location and Environment, Iowa Department of Transportation, 800 Lincoln Way, Ames, IA 50010, (515) 239–1798.

SUPPLEMENTARY INFORMATION:

Electronic Access

An electronic copy of this document may be downloaded using a modem and suitable communications software from the Government Printing Office's Electronic Bulletin Board Service at (202) 512–1661. Internet users may reach the Federal Register's home page at: *http://www.nara.gov/fedreg* and the Government Printing Office's database at *http://www.access.gpo.gov.nara.*

Background

The NOI was originally published in the **Federal Register** on April 23, 2001. The cancelled EIS would have studied capacity improvements for U.S. 20 between the Peosta Interchange and Devon Drive in the City of Dubuque in Dubuque County, Iowa. Due to budget constraints, this project has been postponed.

Comments or questions concerning this proposed action should be directed to the Iowa Department of Transportation or FHWA at the address provided in the caption **FOR FURTHER INFORMATION CONTACT.**

(Catalog of Federal Domestic Assistance Program Number 20.205, Highway Planning and Construction. The regulations implementing Executive Order 12372 regarding intergovernmental consultation of Federal programs and activities apply to this program)

(Authority: 23 U.S.C. 315; 49 CFR 1.48)

Dated: June 25, 2002.

Bobby W. Blackmon,

Division Administrator, Ames, Iowa.

[FR Doc. 02–17484 Filed 7–11–02; 8:45 am]

BILLING CODE 4910–22–M

DEPARTMENT OF TRANSPORTATION

Federal Highway Administration

U.S. 285 Notice of Intent

AGENCY: Federal Highway Administration.

ACTION: Notice of intent and public scoping meeting.

SUMMARY: The FHWA is issuing this notice to advise the public that an environmental impact statement will be prepared for proposed transportation improvements to U.S. 285 from Foxton Road to Bailey in Jefferson and Park Counties, Colorado.

FOR FURTHER INFORMATION CONTACT: Mr. Scott Sands, FHWA Colorado Division, 555 Zang Street, Room 250, Denver, CO 80228, Telephone (303) 969–6730, extension 362.

SUPPLEMENTARY INFORMATION: The FHWA, in cooperation with the Colorado Department of Transportation (CDOT) will prepare an Environmental Impact Statement in accordance with the National Environmental Policy Act (NEPA) for transportation improvements on U.S. 285 from Foxton Road in Conifer to just south of Bailey, Colorado. The EIS will evaluate the No-Action and Build alternative(s) and determine the estimated costs and potential impacts of each. CDOT will be the local lead agency for the EIS. The project is approximately 15 miles in length. Alternatives that may be evaluated include the No-Action Alternative and various 2, 3 and 4 lane alternatives. A public scoping meeting has been scheduled for July 30, 2002 at the Elk Creek Fire Protection District at 11993 Blackfoot Road in Conifer, CO. Scoping meetings are also planned with the U.S. Army Corps of Engineers, U.S. Forest Service, U.S. Environmental Protection Agency, U.S. Fish and Wildlife Service, Colorado Division of Wildlife and various local agencies. This effort will build on the results of the U.S. 285 Feasibility Study which was completed in March of 2002.

Written comments on project scope should be sent to: Mr. Kim Patel, Project Manager, CDOT Region One, 18500 East Colfax Avenue, Aurora, CO 80111, Telephone: (303) 365–7373.

FHWA, CDOT and other local agencies invite interested individuals, organizations, and federal, state and

local agencies to participate in refining the alternatives to be evaluated in the EIS and identifying any significant social, economic or environmental issues related to the alternatives. Scoping comments may be made at the scheduled scoping meeting or in writing. Scoping comments received during the development of the U.S. 285 Feasibility Study will be incorporated into the overall scoping comments for the EIS. The public will receive notices on locations and times of future public meetings through newspaper advertisements and individual correspondence. If you wish to be placed on the project mailing list, please contact Mr. Kim Patel at the address noted above.

All significant social, economic and environmental impacts of the alternatives carried forward for complete EIS analysis will be evaluated. Depending on the alternatives under study, environmental and social impacts to be evaluated will include safety and mobility impacts, impacts on cultural resources, noise impacts, natural resources, air quality, threatened and endangered species, wildlife resources, habitat connectivity, and parks and recreation resources.

In accordance with FHWA policy, the Draft EIS will be prepared with required engineering design studies necessary to complete the document. After its publication, the Draft EIS will be available for public and agency review and comments and a public hearing will be held. A Final EIS will hen be prepared, followed by a Record of Decision which will officially select a preferred alternative. Prior to the official selection of a preferred alternative in the Record of Decision, notification of the preference will be made in either the Draft or Final EIS.

The No-Action Alternative is expected to include minor safety improvements, (e.g., intersection improvements, shoulder widening, or climbing lanes) resurfacing, bridge repair, maintenance, stream or other environmental improvements, and the construction of a grade separated intersection at Wandcrest Drive. Through the course of the EIS, other independent utility projects may be identified if they are found to not conflict with the outcome of the EIS.

Issued on: June 13, 2002.

William C. Jones,

Division Administrator.

[FR Doc. 02–17504 Filed 7–11–02; 8:45 am]

BILLING CODE 4410–22–M

DEPARTMENT OF TRANSPORTATION

Federal Railroad Administration

Petition for Waiver of Compliance

In accordance with part 211 of Title 49 Code of Federal Regulations (CFR), notice is hereby given that the Federal Railroad Administration (FRA) received a request for a waiver of compliance with certain requirements of its safety standards. The individual petition is described below, including the party seeking relief, the regulatory provisions involved, the nature of the relief being requested, and the petitioner's arguments in favor of relief.

Gadsden Switching Service, Inc.

[Docket Number FRA–2002–12315]

The Gadsden Switching Service, Inc. of Scottsboro, Alabama has petitioned on behalf of the Everett Railroad Company for a waiver of compliance for two locomotives from the requirements of the Railroad Safety Glazing Standards, 49 CFR part 223. The two locomotives are operated by remote control and work primarily within the confines of the former Gulf States Steel facility on approximately three miles of track at Gadsden, Alabama. The Gadsden Switching Service, Inc. operation has no public grade crossings.

The two locomotives are presently equipped with ordinary commercial safety glass. On occasion, locomotives EV 913 and EV 921 move over yard tracks owned by CSX Transportation and Norfolk Southern for pick up and delivery of railcars.

Interested parties are invited to participate in these proceedings by submitting written views, data, or comments. FRA does not anticipate scheduling a public hearing in connection with these proceedings since the facts do not appear to warrant a hearing. If any interested party desires an opportunity for oral comment, they should notify FRA, in writing, before the end of the comment period and specify the basis for their request.

All communications concerning these proceedings should identify the appropriate docket number (*e.g.,* Waiver Petition Docket Number 2002–12315) and must be submitted to the Docket Clerk, DOT Docket Management Facility, Room PL–401 (Plaza Level), and 400 7th Street, SW., Washington, DC 20590. Communications received within 45 days of the date of this notice before final action is taken. Comments received after that date will be considered as far as practicable. All written communications concerning these proceedings are available for examination during regular business hours (9:00 a.m.—5:00 p.m.) at the above facility. All documents in the public docket are also available for inspection and copying on the Internet at the docket facility's Web site at *http://dms.dot.gov.*

Issued in Washington, DC, on July 8, 2002.

Grady C. Cothen, Jr.,

Deputy Associate Administrator for Safety Standards and Program Development.

[FR Doc. 02–17568 Filed 7–11–02; 8:45 am]

BILLING CODE 4910–06–P

DEPARTMENT OF TRANSPORTATION

Federal Railroad Administration

Petition for Waiver of Compliance

In accordance with part 211 of Title 49 Code of Federal Regulations (CFR), notice is hereby given that the Federal Railroad Administration (FRA) received a request for a waiver of compliance with certain requirements of its safety standards. The individual petition is described below, including the party seeking relief, the regulatory provisions involved, the nature of the relief being requested, and the petitioner's arguments in favor of relief.

Gulf & Ohio Railways

[Docket Number FRA–2002–11897]

The Gulf and Ohio Railways, parent company to the Knoxville and Holston River Railroad (KXHR), has petitioned for a permanent waiver of compliance from the requirements of the 49 CFR Federal Track Safety Standards Part 213.233, Track Inspections. This requirement prescribes a Gregorian calendar-based frequency for inspecting track to detect deviations from the standards. Railroads operating passenger trains are required to schedule a twice weekly track inspection with at least a one-day interval between inspections.

KXHR began revenue passenger service in early November of 1999. KXHR schedules passenger operations to begin the last week in March and end about mid-November of each year. A passenger train operates twice a day, on Saturdays and Sundays, between milepost 5.8 and milepost 10.8 over the River Front Extension (RFE) track. Freight trains operate daily, Monday through Friday, throughout the RFE's 11.6-miles. In 2001, a substantial number of passengers (more than 12,000) rode the excursion train. In the same year, the traffic density was estimated at 0.072 million gross tons. On the RFE district, KXHR Timetable Number 1 authorizes a maximum speed

of 15-miles per hour for passenger and 10-miles per hour for freight trains. The method of operation is Yard Limit Rule (General Code of Operating Rules). Since 1998, KXHR has operated trains with only one reportable incident, which was a derailment attributed to an equipment failure.

KXHR claims the passenger train operation is on consecutive days, requiring them to make two inspections between Monday and Friday, even though they do not operate the passenger train between inspections. KXHR requests relief from the second inspection during the week. In the event a special train is operated between Monday and Friday, KXHR states they will conduct the compulsory twice weekly inspections.

Interested parties are invited to participate in these proceedings by submitting written views, data, or comments. FRA does not anticipate scheduling a public hearing in connection with these proceedings since the facts do not appear to warrant a hearing. If any interested party desires an opportunity for oral comment, they should notify FRA, in writing, before the end of the comment period and specify the basis for their request.

All communications concerning these proceedings should identify the appropriate docket number (e.g., Waiver Petition Docket Number FRA–2002–11897) and must be submitted to the Docket Clerk, DOT Central Docket Management Facility, Room PL–401, Washington, DC 20590–0001. Communications received within 45 days of the date of this notice will be considered by FRA before final action is taken. Comments received after that date will be considered as far as practicable. All written communications concerning these proceedings are available for examination during regular business hours (9:00 a.m.–5:00 p.m.) at the above facility. All documents in the public docket are also available for inspection and copying on the Internet at the docket facility's Web site at *http://dms.dot.gov*.

Issued in Washington, DC, on July 8, 2002.

Grady C. Cothen, Jr.,

Deputy Associate Administrator for Safety Standards and Program Development.

[FR Doc. 02–17567 Filed 7–11–02; 8:45 am]

BILLING CODE 4910–06–P

DEPARTMENT OF TRANSPORTATION

Federal Railroad Administration

Petition for Waiver of Compliance

In accordance with part 211 of Title 49 Code of Federal Regulations (CFR), notice is hereby given that the Federal Railroad Administration (FRA) received a request for a waiver of compliance with certain requirements of its safety standards. The individual petition is described below, including the party seeking relief, the regulatory provisions involved, the nature of the relief being requested, and the petitioner's arguments in favor of relief.

Port Authority Trans-Hudson Corporation

[Docket Number FRA–2002–12409]

The Port Authority Trans-Hudson Corporation (PATH) seeks a waiver of compliance from the requirements of [49 CFR 238.305(c)(10)] and [49 CFR 238.317(a)(1)] of the Passenger Equipment Safety Standards. Section 238.305(c)(10) requires all end doors and side doors to operate safely and as intended. A non-complying car may continue in passenger service pursuant to paragraph (d) of this section, if, at least one operative and accessible door is available on each side of the car; and a notice is prominently displayed directly on the defective door indicating that the door is defective. Section 238.305(d) allows a passenger car found not to be in compliance with the requirements contained in paragraphs (c)(10) at the time of its interior calendar day mechanical inspection to remain in passenger service until the car's next interior calendar day mechanical inspection where it must be repaired or removed from passenger service.

PATH's request was for (MU) passenger cars equipped with two and three double leaf side doors on each side of the car. These cars are allowed to operate beyond the next interior calendar day inspection for up to eight days after the requirements of 238.305(d)(1), (2), and (3) are met. Section 238.305 (d) requires that: (1) A qualified person or a qualified maintenance person determines that the repairs necessary to bring the car into compliance cannot be performed at the time that the current day's interior mechanical inspection is conducted; (2) A qualified person or a qualified maintenance person determines that it is safe to move the equipment in passenger service; and (3) A record is maintained of the non-complying condition with the date and time that the condition was first discovered.

Section 238.317(a)(1) requires that whenever the control stand used to control the train is changed, a Class II brake test shall be performed prior to the train's departure from the terminal. PATH requests partial relief from this requirement. PATH does not want to perform this brake test when the train's terminal dwell time is less then five minutes because the conductor would not have time to perform the test at the rear of the train and walk forward to his operating position between the first and second car.

Interested parties are invited to participate in these proceedings by submitting written views, data, or comments. FRA does not anticipate scheduling a public hearing in connection with these proceedings since the facts do not appear to warrant a hearing. If any interested party desires an opportunity for oral comment, they should notify FRA, in writing, before the end of the comment period and specify the basis for their request.

All communications concerning these proceedings should identify the appropriate docket number (e.g., Waiver Petition Docket Number FRA–2002–12409) and must be submitted to the Docket Clerk, DOT Central Docket Management Facility, Room P1–401, Washington, DC 20590–0001. Communications received within 45 days of the date of this notice will be considered by FRA before final action is taken. Comments received after that date will be considered as far as practicable. All written communications concerning these proceedings are available for examination during regular business hours (9 a.m.–5 p.m.) at the above facility. All documents in the public docket are also available for inspection and copying on the Internet at the docket facility's Web site at *http://dms.dot.gov*.

Issued in Washington, DC, on July 8, 2002.

Grady C. Cothen, Jr.,

Deputy Associate Administrator for Safety Standards and Program Development.

[FR Doc. 02–17572 Filed 7–11–02; 8:45 am]

BILLING CODE 4910–06–P

DEPARTMENT OF TRANSPORTATION

Federal Railroad Administration

Notice of Application for Approval of Discontinuance or Modification of a Railroad Signal System or Relief From the Requirements of Title 49 Code of Federal Regulations Part 236

Pursuant to Title 49 Code of Federal Regulations (CFR) part 235 and 49 U.S.C. 20502(a), the following railroads

have petitioned the Federal Railroad Administration (FRA) seeking approval for the discontinuance or modification of the signal system or relief from the requirements of 49 CFR part 236 as detailed below.

Docket Number: FRA–2002–12269.

Applicant: CSX Transportation, Incorporated, Mr. N. Michael Choat, Assistant Chief Engineer of Signal Maintenance, 4901 Belfort Road, Suite 130 (S/C J–370), Jacksonville, Florida 32256.

CSX Transportation, Incorporated (CSXT) seeks relief from the requirements of the Rules, Standard and Instructions, 49 CFR, part 236, section 236.110, to the extent that each test record need not be signed by the person making the inspection or test, in lieu of implementing an electronic system to record and maintain Signal inspection records that provide inherent security measures that uniquely identify the person as the author of the record. Once a record is entered and verified, it cannot be modified. In conjunction with this relief, CSXT also requests the utilization of an electronic system for recording and maintaining applicable inspection and test records as defined in 49 CFR, part 234, subject to approval by the Associate Administrator for Safety, as required by section 234.273.

Applicant's justification for relief: CSXT believes that the electronic system will serve the best interest of CSXT and the Federal and State Inspection authorities that are required to inspect records, and anticipate the system will provide many benefits, including:

- Improved availability of test records
- Improved management reporting of compliance
- Improved consistency for filing records
- A reduction in the need for paper documentation

Any interested party desiring to protest the granting of an application shall set forth specifically the grounds upon which the protest is made, and contain a concise statement of the interest of the party in the proceeding. Additionally, one copy of the protest shall be furnished to the applicant at the address listed above.

All communications concerning this proceeding should be identified by the docket number and must be submitted to the Docket Clerk, DOT Central Docket Management Facility, Room PI–401, Washington, DC 20590–0001. Communications received within 45 days of the date of this notice will be considered by the FRA before final action is taken. Comments received after that date will be considered as far as practicable. All written communications concerning these proceedings are available for examination during regular business hours (9 a.m.–5 p.m.) at DOT Central Docket Management Facility, Room PI–401 (Plaza Level), 400 Seventh Street, SW., Washington, DC 20590–0001. All documents in the public docket are also available for inspection and copying on the internet at the docket facility's Web site at *http://dms.dot.gov.*

FRA expects to be able to determine these matters without an oral hearing. However, if a specific request for an oral hearing is accompanied by a showing that the party is unable to adequately present his or her position by written statements, an application may be set for public hearing.

Issued in Washington, DC, on July 8, 2002.

Grady C. Cothen, Jr.,

Deputy Associate Administrator for Safety Standards and Program Development.

[FR Doc. 02–17569 Filed 7–11–02; 8:45 am]

BILLING CODE 4910–06–P

DEPARTMENT OF TRANSPORTATION

Federal Railroad Administration

Notice of Application for Approval of Discontinuance or Modification of a Railroad Signal System or Relief From Requirements

Pursuant to Title 49 Code of Federal Regulations (CFR) part 235 and 49 U.S.C. 20502(a), the following railroads have petitioned the Federal Railroad Administration (FRA) seeking approval for the discontinuance or modification of the signal system or relief from the requirements of 49 CFR part 236 as detailed below.

Docket Number: FRA–2002–12314.

Applicant: Union Pacific Railroad Company, Mr. Phil M. Abaray, Chief Engineer—Signals, 1416 Dodge Street, Room 1000, Omaha, Nebraska 68179–1000.

Union Pacific Railroad Company seeks approval of the proposed modification of the traffic control system, at milepost 250.1 on the Dallas Subdivision, Centennial Yard, in Fort Worth, Texas. The proposed changes consist of the discontinuance and removal of automatic signal 2501 and inoperative approach signal 2500, associated with the 7,500 foot block reduction at the entrance of CTC territory. The 7,500 foot track circuit, protected by signal 2501, will be shortened and used to approach light controlled signal WB at milepost 251.5.

The reason given for the proposed changes is that the signals presently disrupt switching operations due to the need to get permission from the dispatcher to pass signal 2501 if it is red, and changes in the methods of operation have made signal 2501 unnecessary.

Any interested party desiring to protest the granting of an application shall set forth specifically the grounds upon which the protest is made, and contain a concise statement of the interest of the party in the proceeding. Additionally, one copy of the protest shall be furnished to the applicant at the address listed above.

All communications concerning this proceeding should be identified by the docket number and must be submitted to the Docket Clerk, DOT Central Docket Management Facility, Room PI–401, Washington, DC 20590–0001. Communications received within 45 days of the date of this notice will be considered by the FRA before final action is taken. Comments received after that date will be considered as far as practicable. All written communications concerning these proceedings are available for examination during regular business hours (9 a.m.–5 p.m.) at DOT Central Docket Management Facility, Room PI–401 (Plaza Level), 400 Seventh Street, SW., Washington, DC 20590–0001. All documents in the public docket are also available for inspection and copying on the internet at the docket facility's Web site at *http://dms.dot.gov.*

FRA expects to be able to determine these matters without an oral hearing. However, if a specific request for an oral hearing is accompanied by a showing that the party is unable to adequately present his or her position by written statements, an application may be set for public hearing.

Issued in Washington, DC, on July 8, 2002.

Grady C. Cothen, Jr.,

Deputy Associate Administrator for Safety Standards and Program Development.

[FR Doc. 02–17570 Filed 7–11–02; 8:45 am]

BILLING CODE 4910–06–P

DEPARTMENT OF TRANSPORTATION

Federal Railroad Administration

Notice of Application for Approval of Discontinuance or Modification of a Railroad Signal System or Relief From Requirements

Pursuant to Title 49 Code of Federal Regulations (CFR) part 235 and 49 U.S.C. 20502(a), the following railroads have petitioned the Federal Railroad

Administration (FRA) seeking approval for the discontinuance or modification of the signal system or relief from the requirements of 49 CFR part 236 as detailed below.

Docket Number: FRA–2002–12313.

Applicant: Union Pacific Railroad Company, Mr. Phil M. Abaray, Chief Engineer—Signals, 1416 Dodge Street, Room 1000, Omaha, Nebraska 68179–1000.

Union Pacific Railroad Company seeks approval of the proposed modification of the automatic block signal system, at milepost 2.1 on the Altoona Subdivision, in East St. Paul, Minnesota, consisting of the discontinuance and removal of automatic signal 21, and extension of the approach signal 31 block to include the track presently protected signal 21.

The reason given for the proposed changes is that the Arcade Street overpass near the signal is to be reconstructed, and the new overpass will encroach on the present location of signal 21, necessitating its removal or relocation. The low speed of 10 mph, the reduced train traffic, and the short protected block mitigate the necessity of the signal.

Any interested party desiring to protest the granting of an application shall set forth specifically the grounds upon which the protest is made, and contain a concise statement of the interest of the party in the proceeding. Additionally, one copy of the protest shall be furnished to the applicant at the address listed above.

All communications concerning this proceeding should be identified by the docket number and must be submitted to the Docket Clerk, DOT Central Docket Management Facility, Room PI–401, Washington, DC 20590–0001. Communications received within 45 days of the date of this notice will be considered by the FRA before final action is taken. Comments received after that date will be considered as far as practicable. All written communications concerning these proceedings are available for examination during regular business hours (9 a.m.–5 p.m.) at DOT Central Docket Management Facility, Room PI–401 (Plaza Level), 400 Seventh Street, SW., Washington, DC 20590–0001. All documents in the public docket are also available for inspection and copying on the internet at the docket facility's Web site at *http://dms.dot.gov.*

FRA expects to be able to determine these matters without an oral hearing. However, if a specific request for an oral hearing is accompanied by a showing that the party is unable to adequately present his or her position by written statements, an application may be set for public hearing.

Issued in Washington, DC, on July 8, 2002.

Grady C. Cothen, Jr.,

Deputy Associate Administrator for Safety Standards and Program Development.

[FR Doc. 02–17571 Filed 7–11–02; 8:45 am]

BILLING CODE 4910–06–P

DEPARTMENT OF TRANSPORTATION

Maritime Administration

[Docket Number: MARAD–2002–12723]

Requested Administrative Waiver of the Coastwise Trade Laws

AGENCY: Maritime Administration, Department of Transportation.

ACTION: Invitation for public comments on a requested administrative waiver of the Coastwise Trade Laws for the vessel DEEP SCAN.

SUMMARY: As authorized by Pub. L. 105–383, the Secretary of Transportation, as represented by the Maritime Administration (MARAD), is authorized to grant waivers of the U.S.-build requirement of the coastwise laws under certain circumstances. A request for such a waiver has been received by MARAD. The vessel, and a description of the proposed service, is listed below. Interested parties may comment on the effect this action may have on U.S. vessel builders or businesses in the U.S. that use U.S.-flag vessels. If MARAD determines that in accordance with Pub. L. 105–383 and MARAD's regulations at 46 CFR part 388 (65 FR 6905; February 11, 2000) that the issuance of the waiver will have an unduly adverse effect on a U.S.-vessel builder or a business that uses U.S.-flag vessels, a waiver will not be granted.

DATES: Submit comments on or before August 12, 2002.

ADDRESSES: Comments should refer to docket number MARAD–2002–12723. Written comments may be submitted by hand or by mail to the Docket Clerk, U.S. DOT Dockets, Room PL–401, Department of Transportation, 400 7th St., SW., Washington, DC 20590–0001. You may also send comments electronically via the Internet at *http://dmses.dot.gov/submit/.* All comments will become part of this docket and will be available for inspection and copying at the above address between 10 a.m. and 5 p.m., E.T., Monday through Friday, except federal holidays. An electronic version of this document and all documents entered into this docket is available on the World Wide Web at *http://dms.dot.gov.*

FOR FURTHER INFORMATION CONTACT: Kathleen Dunn, U.S. Department of Transportation, Maritime Administration, MAR–832 Room 7201, 400 Seventh Street, SW., Washington, DC 20590. Telephone 202–366–2307.

SUPPLEMENTARY INFORMATION: Title V of Pub. L. 105–383 provides authority to the Secretary of Transportation to administratively waive the U.S.-build requirements of the Jones Act, and other statutes, for small commercial passenger vessels (no more than 12 passengers). This authority has been delegated to the Maritime Administration per 49 CFR 1.66, Delegations to the Maritime Administrator, as amended. By this notice, MARAD is publishing information on a vessel for which a request for a U.S.-build waiver has been received, and for which MARAD requests comments from interested parties. Comments should refer to the docket number of this notice and the vessel name in order for MARAD to properly consider the comments. Comments should also state the commenter's interest in the waiver application, and address the waiver criteria given in § 388.4 of MARAD'S regulations at 46 CFR part 388.

Vessel Proposed for Waiver of the U.S.-Build Requirement

(1) Name of vessel and owner for which waiver is requested. *Name of vessel: DEEP SCAN. Owner:* Aqua Gems of the Treasure Coast Inc.

(2) Size, capacity and tonnage of vessel. *According to the applicant:* ''62 feet long by 18 feet Beam and drafts about 2 and a half ft. Gross tonnage is 26 tons * * *''

(3) Intended use for vessel, including geographic region of intended operation and trade. *According to the applicant:* ''The vessel will be used as a magnetometer and sonar platform to survey and salvage shipwrecks as well as a dive boat platform in areas in Alabama, Florida and Georgia and the Great Lakes region.''

(4) Date and Place of construction and (if applicable) rebuilding. *Date of construction:* 1983. *Place of construction:* Holland.

(5) A statement on the impact this waiver will have on other commercial passenger vessel operators. *According to the applicant:* ''Because of the shallow draft capabilities and unique electronics packages of the R/V Deep Scans systems their should be no impact to other commercial operators * * * The R/V Deep Scan is a one of a kind Research Vessel and therefore no impact to other operators and shipyards should be noted or penalized.''

(6) A statement on the impact this waiver will have on U.S. shipyards. *According to the applicant:* ''* * *their should be no impact to other * * * U.S. shipyards.''

Dated: July 8, 2002.

By Order of the Maritime Administrator.

Joel C. Richard,

Secretary, Maritime Administration.

[FR Doc. 02–17500 Filed 7–11–02; 8:45 am]

BILLING CODE 4910–81–P

DEPARTMENT OF TRANSPORTATION

Maritime Administration

[Docket Number: MARAD–2002–12724]

Requested Administrative Waiver of the Coastwise Trade Laws

AGENCY: Maritime Administration, Department of Transportation.

ACTION: Invitation for public comments on a requested administrative waiver of the Coastwise Trade Laws for the vessel LIEBESTRAUM.

SUMMARY: As authorized by Pub. L. 105–383, the Secretary of Transportation, as represented by the Maritime Administration (MARAD), is authorized to grant waivers of the U.S.-build requirement of the coastwise laws under certain circumstances. A request for such a waiver has been received by MARAD. The vessel, and a description of the proposed service, is listed below. Interested parties may comment on the effect this action may have on U.S. vessel builders or businesses in the U.S. that use U.S.-flag vessels. If MARAD determines that in accordance with Pub. L. 105–383 and MARAD's regulations at 46 CFR part 388 (65 FR 6905; February 11, 2000) that the issuance of the waiver will have an unduly adverse effect on a U.S.-vessel builder or a business that uses U.S.-flag vessels, a waiver will not be granted.

DATES: Submit comments on or before August 12, 2002.

ADDRESSES: Comments should refer to docket number MARAD–2002–12724. Written comments may be submitted by hand or by mail to the Docket Clerk, U.S. DOT Dockets, Room PL–401, Department of Transportation, 400 7th St., SW., Washington, DC 20590–0001. You may also send comments electronically via the Internet at *http://dmses.dot.gov/submit/.* All comments will become part of this docket and will be available for inspection and copying at the above address between 10 a.m. and 5 p.m., E.T., Monday through Friday, except federal holidays. An electronic version of this document and all documents entered into this docket is available on the World Wide Web at *http://dms.dot.gov.*

FOR FURTHER INFORMATION CONTACT: Kathleen Dunn, U.S. Department of Transportation, Maritime Administration, MAR–832 Room 7201, 400 Seventh Street, SW., Washington, DC 20590. Telephone 202–366–2307.

SUPPLEMENTARY INFORMATION: Title V of Pub. L. 105–383 provides authority to the Secretary of Transportation to administratively waive the U.S.-build requirements of the Jones Act, and other statutes, for small commercial passenger vessels (no more than 12 passengers). This authority has been delegated to the Maritime Administration per 49 CFR 1.66, Delegations to the Maritime Administrator, as amended. By this notice, MARAD is publishing information on a vessel for which a request for a U.S.-build waiver has been received, and for which MARAD requests comments from interested parties. Comments should refer to the docket number of this notice and the vessel name in order for MARAD to properly consider the comments. Comments should also state the commenter's interest in the waiver application, and address the waiver criteria given in § 388.4 of MARAD'S regulations at 46 CFR part 388.

Vessel Proposed for Waiver of the U.S.-Build Requirement

(1) Name of vessel and owner for which waiver is requested.

Name of vessel: LIEBESTRAUM. *Owner:* Franz Fenkl.

(2) Size, capacity and tonnage of vessel. *According to the applicant:* ''38 ft., 14 tons, no more than 12 persons.''

(3) Intended use for vessel, including geographic region of intended operation and trade. *According to the applicant:* ''The geographic region of intended use of the vessel for which waiver is being requested is Coastwise USA and territories, with primary use along the coastline of Shelter Island, New York. The intended use of the vessel for which waiver is being requested is charter boat for lunch and dinner cruises for hotel guests.''

(4) Date and Place of construction and (if applicable) rebuilding. *Date of construction:* 1983. *Place of construction:* Taiwan.

(5) A statement on the impact this waiver will have on other commercial passenger vessel operators. *According to the applicant:* ''The impact this waiver (if granted) will have on comparable vessels in comparable operations in the intended geographic area of intended operation of the vessel for which waiver is being requested is minimal to none. The operations of similar vessels in the geographic area of intended operation of the vessel for which waiver is being requested are as follows: there are no such similar vessels in the geographic area of Shelter Island, New York, and no known comparable boats in operation nearby.''

(6) A statement on the impact this waiver will have on U.S. shipyards. *According to the applicant:* ''The impact this waiver (if granted) will have on U.S. shipyards is none.''

Dated: July 8, 2002.

By Order of the Maritime Administrator.

Joel C. Richard,

Secretary, Maritime Administration.

[FR Doc. 02–17501 Filed 7–11–02; 8:45 am]

BILLING CODE 4910–81–P

DEPARTMENT OF TRANSPORTATION

Maritime Administration

[Docket Number: MARAD–2002–12725]

Requested Administrative Waiver of the Coastwise Trade Laws

AGENCY: Maritime Administration, Department of Transportation.

ACTION: Invitation for public comments on a requested administrative waiver of the Coastwise Trade Laws for the vessel THORR.

SUMMARY: As authorized by Pub. L. 105–383, the Secretary of Transportation, as represented by the Maritime Administration (MARAD), is authorized to grant waivers of the U.S.-build requirement of the coastwise laws under certain circumstances. A request for such a waiver has been received by MARAD. The vessel, and a description of the proposed service, is listed below. Interested parties may comment on the effect this action may have on U.S. vessel builders or businesses in the U.S. that use U.S.-flag vessels. If MARAD determines that in accordance with Pub. L. 105–383 and MARAD's regulations at 46 CFR part 388 (65 FR 6905; February 11, 2000) that the issuance of the waiver will have an unduly adverse effect on a U.S.-vessel builder or a business that uses U.S.-flag vessels, a waiver will not be granted.

DATES: Submit comments on or before August 12, 2002.

ADDRESSES: Comments should refer to docket number MARAD–2002–12725. Written comments may be submitted by hand or by mail to the Docket Clerk, U.S. DOT Dockets, Room PL–401, Department of Transportation, 400 7th St., SW., Washington, DC 20590–0001.

You may also send comments electronically via the Internet at *http://dmses.dot.gov/submit/.* All comments will become part of this docket and will be available for inspection and copying at the above address between 10 a.m. and 5 p.m., E.T., Monday through Friday, except federal holidays. An electronic version of this document and all documents entered into this docket is available on the World Wide Web at *http://dms.dot.gov.*

FOR FURTHER INFORMATION CONTACT: Kathleen Dunn, U.S. Department of Transportation, Maritime Administration, MAR–832 Room 7201, 400 Seventh Street, SW., Washington, DC 20590. Telephone 202–366–2307.

SUPPLEMENTARY INFORMATION: Title V of Pub. L. 105–383 provides authority to the Secretary of Transportation to administratively waive the U.S.-build requirements of the Jones Act, and other statutes, for small commercial passenger vessels (no more than 12 passengers). This authority has been delegated to the Maritime Administration per 49 CFR 1.66, Delegations to the Maritime Administrator, as amended. By this notice, MARAD is publishing information on a vessel for which a request for a U.S.-build waiver has been received, and for which MARAD requests comments from interested parties. Comments should refer to the docket number of this notice and the vessel name in order for MARAD to properly consider the comments. Comments should also state the commenter's interest in the waiver application, and address the waiver criteria given in § 388.4 of MARAD'S regulations at 46 CFR part 388.

Vessel Proposed for Waiver of the U.S.-Build Requirement

(1) Name of vessel and owner for which waiver is requested.

Name of vessel: THORR. *Owner:* Mark S. Kulstad.

(2) Size, capacity and tonnage of vessel. *According to the applicant:* ''44′2″LWL, 50′6″LOD, 41 gross tons, 33 net tons″

(3) Intended use for vessel, including geographic region of intended operation and trade. According to the applicant:

''I intent to use THORR as my private yacht and offer two (2) to six (6) guests to share in that experience for a fee. I intent to continue to cruise between Seward Alaska, the Prince William Sound and as far west as Kodiak in the summer. The number of day's operation will be limited to the weekends and my days off. My trips will be overnight and three to four days. In September of each year I intend to take THORR down to the South East Alaska for winter lay up and return to Seward in May of each year. I would like to offer (2) to four (4) guests to accompany me on these two trips per year for a fee.''

(4) Date and Place of construction and (if applicable) rebuilding. *Date of construction:* 1997. *Place of construction:* Tapei, Taiwan.

(5) A statement on the impact this waiver will have on other commercial passenger vessel operators. *According to the applicant:* ''The impact I will have on other commercial passenger vessel operators should be non-existent. I am owner operator offering 20 to 30 trips a year. I intend to take two to six guests per trip, not because of regulation of economy but because I like to sleep in my own bed. With the hundreds of thousands of visitors to Alaska in the summers my few guests will have no effect on anyone. Currently out of Seward there are no overnight two to six person yacht operators. There are two operators that take out 15 to 20 guests on overnight, sightseeing trips, one operating out of Cordova, and one of Whittier. Out of Seward Kenai Fjord tours, Major marine tours, and Renown Charters offer sightseeing day trips for large groups (25 to 200+). There are also many fishing charters that take out 6 to 25 fishers on daily fishing trips, but THORR is not a fishing boat, it's a luxury yacht, we don't fish. Out of Whittier, Valdez, Cordova, Homer, Kodiak, and considering my 2 trips per year, Juneau, Ketchikan, and Sitka, there are similar large sightseeing tours, fishing charter and large overnight sightseeing charters. I'm sure there a few other small charters similar to my intended operation but with the vast number of tourists, friends, associates, and personal contacts I'm sure I will have no impact on those operators.''

(6) A statement on the impact this waiver will have on U.S. shipyards. *According to the applicant:* ''The issuing of this waiver will have no impact on U.S. shipyards. No U.S. shipyard markets a yacht less that 50 foot, capable of crossing a ocean, for an owner who wants to take the occasional guest for charter.''

Dated: July 8, 2002.

By Order of the Maritime Administrator.

Joel C. Richard,

Secretary, Maritime Administration.

[FR Doc. 02–17502 Filed 7–11–02; 8:45 am]

BILLING CODE 4910–81–P

DEPARTMENT OF TRANSPORTATION

Surface Transportation Board

[STB Finance Docket No. 34221]

Central Railroad Company of Indianapolis—Acquisition and Operation Exemption—Norfolk Southern Railway Company

Central Railroad Company of Indianapolis (CERA), a Class III rail carrier, has filed a verified notice of exemption under 49 CFR 1150.41 to acquire and operate approximately 31.66 miles of rail line owned by Norfolk Southern Railway Company (NSR).[1] The line to be acquired and operated runs between (1) Kokomo, IN, milepost I–51.8, and near Kokomo, milepost I–57.2, and (2) near West Marion Belt, IN, milepost TS–157.44, and Kokomo, milepost TS–183.7.[2] CERA certifies that its projected revenues as a result of this transaction will not result in the creation of a Class I or Class II rail carrier, and that its projected annual revenues will not exceed $5 million.

The transaction was expected to be consummated on or after June 21, 2002, the effective date of the exemption (7 days after the notice was filed).

If the verified notice contains false or misleading information, the exemption is void *ab initio.* Petitions to revoke the exemption under 49 U.S.C. 10502(d) may be filed any time. The filing of a petition to revoke will not automatically stay the transaction.

An original and 10 copies of all pleadings, referring to STB Finance Docket No. 34221, must be filed with the Surface Transportation Board, 1925 K Street, NW., Washington, DC 20423–

[1] CERA initially leased 121.82 miles of rail line in 1989 from Norfolk and Western Railway Company, the predecessor of NSR. However, since 1989, CERA has discontinued service over 90.16 miles of the rail line that it initially leased. CERA continued to operate over those portions of the leased line after each discontinuance, and currently operates over the 31.66 miles of rail line it seeks to acquire.

[2] On June 14, 2002, CERA concurrently filed a notice of exemption in STB Finance Docket No. 34212, *Central Railroad Company of Indianapolis-Trackage Rights Exemption—Norfolk Southern Railway Company* (STB served July 3, 2002), wherein NSR granted CERA approximately 5 miles of overhead and limited local trackage rights over a portion of NSR's tracks as follows: (1) from CERA's connection with NSR and the trackage of the West Marion Belt at Michael, IN, at milepost TS–157.44, to the connection between the West Marion Belt and the trackage of Winamac Southern Railroad Company adjacent to NSR-operated Goodman Yard at Marion, IN, and (2) from CERA's connection with NSR at milepost TS–157.44, through the switch serving Bell Fiber Corporation at milepost TS–155.6, to, and including the switch serving Essex Wire, Incorporated, at milepost TS–154.65.

0001. In addition, a copy of each pleading must be served on Louis E. Gitomer, 1455 F Street, NW., Suite 225, Washington, DC 20005.

Board decisions and notices are available on our Web site at *www.stb.dot.gov.*

Decided: July 8, 2002.

By the Board, David M. Konschnik, Director, Office of Proceedings.

Vernon A. Williams,

Secretary.

[FR Doc. 02–17543 Filed 7–11–02; 8:45 am]

BILLING CODE 4915–00–P

DEPARTMENT OF THE TREASURY

Submission for OMB Review; Comment Request

July 2, 2002.

The Department of Treasury has submitted the following public information collection requirement(s) to OMB for review and clearance under the Paperwork Reduction Act of 1995, Public law 104–13. Copies of the submission(s) may be obtained by calling the Treasury Bureau Clearance Officer listed. Comments regarding this information collection should be addressed to the OMB reviewer listed and to the Treasury Department Clearance Officer, Department of the Treasury, Room 2110, 1425 New York Avenue, NW., Washington, DC 20220

Dates: Written comments should be received on or before August 12, 2002. to be assured of consideration

Internal Revenue Service (IRS)

OMB Number: 1545–1779.

Notice Number: Notice 2002–27.

Type of Review: Extension.

Title: IRA Required Minimum Distribution Reporting.

Description: This notice provides guidance with respect to the reporting requirements, that is, data that custodians and trustees of IRAs must furnish IRS owners in those instances where there must be a minimum distribution from an individual retirement arrangement.

Respondents: Business or other for-profit, Not-for-profit institutions.

Estimated Number of Respondents: 78,000.

Estimated Burden Hours Per Respondent: 15 hours.

Frequency of Response: Annually, Other (one per IRA).

Estimated Total Reporting Burden: 1,170,000 hours.

Clearance Officer: Glenn Kirkland (202) 622–3428, Internal Revenue Service, Room 6411–03, 1111 Constitution Avenue, NW., Washington, DC 20224.

OMB Reviewer: Joseph F. Lackey, Jr., (202) 395–7316, Office of Management and Budget, Room 10235, New Executive Office Building, Washington, DC 20503.

Lois K. Holland,

Departmental Reports, Management Officer.

[FR Doc. 02–17491 Filed 7–11–02; 8:45 am]

BILLING CODE 4830–01–M

DEPARTMENT OF THE TREASURY

Submission for OMB Review; Comment Request

July 5, 2002.

The Department of the Treasury has submitted the following public information collection requirement(s) to OMB for review and clearance under the Paperwork Reduction Act of 1995, Public Law 104–13. Copies of the submission(s) may be obtained by calling the Treasury Bureau Clearance Officer listed. Comments regarding this information collection should be addressed to the OMB reviewer listed and to the Treasury Department Clearance Officer, Department of the Treasury, Room 2110, 1425 New York Avenue, NW., Washington, DC 20220.

DATES: Written comments should be received on or before August 12, 2002, to be assured of consideration.

Internal Revenue Service (IRS)

OMB Number: 1545–0003.

Form Number: IRS Forms SS–4 and SS–4PR.

Type of Review: Extension.

Title: Application for Employer Identification Number (SS–4); and Solicitud de Ńumero de Identificacíon Patronal (EIN) (SS–4PR).

Description: Taxpayers required to have an identification number for use on any return, statement, or other document must prepare and File Form SS–4 or Form SS–4PR (Puerto Rico only) to obtain a number. The information is used by the IRS and the SSA in tax administration and by the Bureau of the Census for business statistics.

Respondents: Business or other for-profit, Individuals or households, Not-for-profit institutions, Farms, Federal Government, State, Local or Tribal Government.

Estimated Number of Respondents/Recordkeepers: 2,419,064.

Estimated Burden Hours Per Respondent/Recordkeeper:

	Form SS–4 (min.)	Form SS–4PR (min.)
Recordkeeping	6	7
Learning about the law or the form	22	22
Preparing the form	46	46
Copying, assembling, and sending the form to the IRS	20	20

Frequency of Response: On occasion.

Estimated Total Reporting/Recordkeeping Burden: 3,919,265 hours.

OMB Number: 1545–0049.

Form Number: IRS Form 990–BL, Schedule A (Form 990–BL), Form 6069.

Type of Review: Extension.

Title: Form 990–BL, Information and Initial Excise Tax Return for Black Lung Benefit Trusts and Certain Related Persons; and Schedule A, (Form 990–BL), Initial Excise Taxes on Black Lung Benefit Trusts and Certain Related Persons Under sections 4951 and 4952 of the Internal Revenue Code; and Form 6069, Return of Excise Tax on Excess Contributions to Black Lung Benefit Trust Under Section 4953 and Computation of Section 192 Deduction.

Description: IRS uses Form 990–BL to monitor activities of black lung benefit trusts, and to collect excise taxes on these trusts and certain related persons if they engage in proscribed activities. The tax is figured on Schedule A and attached to Form 990–BL. Form 6069 is used by coal mine operators to figure the maximum deduction to a black lung benefit trust. If excess contributions are made, IRS uses the form to figure and collect the tax on excess contributions.

Respondents: Business or other for-profit, Individuals or households, Not-for-profit institutions.

Estimated Number of Respondents/Recordkeeper: 22.

Estimated Burden Hours Per Respondent/Recordkeeper:

	Form 990–BL	Schedule A	Form 6069
Recordkeeping	16 hr., 44 min	6 hr., 56 min	6 hr., 42 min.
Learning about the law or the form	3 hr., 52 min	18 min	1 hr., 45 min.
Preparing, copying, assembling and sending the form to the IRS	4 hr., 19 min	25 min	3 hr., 8 min.

Frequency of Response: Annually.
Estimated Total Reporting/ Recordkeeping Burden: 592 hours.
Clearance Officer: Glenn Kirkland, Internal Revenue Service, Room 6411–03, 1111 Constitution Avenue, NW., Washington, DC 20224, (202) 622–3428.
OMB Reviewer: Joseph F. Lackey, Jr., Office of Management and Budget, Room 10235, New Executive Office Building, Washington, DC 20503, (202) 395–7316.

Mary A. Able,
Departmental Reports, Management Officer.
[FR Doc. 02–17492 Filed 7–11–02; 8:45 am]
BILLING CODE 4830–01–P

DEPARTMENT OF THE TREASURY

Submission for OMB Review; Comment Request

July 5, 2002.

The Department of Treasury has submitted the following public information collection requirement(s) to OMB for review and clearance under the Paperwork Reduction Act of 1995, Public Law 104–13. Copies of the submission(s) may be obtained by calling the Treasury Bureau Clearance Officer listed. Comments regarding this information collection should be addressed to the OMB reviewer listed and to the Treasury Department Clearance Officer, Department of the Treasury, Room 2110, 1425 New York Avenue, NW., Washington, DC 20220.

DATES: Written comments should be received on or before August 12, 2002, to be assured of consideration.

Internal Revenue Service (IRS)

OMB Number: 1545–1139.
Regulation Project Number: PS–264–82 Final.
Type of Review: Extension.
Title: Adjustments to Basis of Stock and Indebtedness to Shareholders of S Corporations and Treatment of Distribution by S Corporations to Shareholders.
Description: The regulations provide the procedures and the statements to be filed by S corporations for making the election provided under section 1368, and by shareholders who choose to reorder items that decrease their basis. Statements required to be filled will be used to verify that taxpayers are complying with the requirements imposed by Congress.
Respondents: Business or other for-profit, Individuals or households.
Estimated Number of Respondents: 2,000.
Estimated Burden Hours Per Respondent: 6 minutes.
Frequency of Response: Annually.
Estimated Total Reporting Burden: 200 hours.
OMB Number: 1545–1491.
Regulation Project Number: REG–209798–95 Final.
Type of Review: Extension.
Title: Amortizable Bond Premium.
Description: The information requested is necessary for the Service to determine whether a holder of a bond had elected to amortize bond premium and to determine whether an issuer or a holder has changed its method of accounting for premium.
Respondents: Business or other for-profit, Individuals or households.
Estimated Number of Respondents: 100,000.
Estimated Burden Hours Per Respondent: 30 minutes.
Frequency of Response: Other (once).
Estimated Total Reporting Burden: 50,000 hours.
Clearance Officer: Glenn Kirkland, Internal Revenue Service, Room 6411–03, 1111 Constitution Avenue, NW., Washington, DC 20224, (202) 622–3428.
OMB Reviewer: Joseph F. Lackey, Jr., Office of Management and Budget, Room 10235, New Executive Office Building, Washington, DC 20503, (202) 395–7316.

Lois K. Holland,
Departmental Reports, Management Officer.
[FR Doc. 02–17493 Filed 7–11–02; 8:45 am]
BILLING CODE 4830–01–P

DEPARTMENT OF THE TREASURY

Departmental Offices; Debt Management Advisory Committee Meeting

Notice is hereby given, pursuant to 5 U.S.C. App. 2, 10(a)(2), that a meeting will be held at the U.S. Treasury Department, 15th and Pennsylvania Avenue, NW., Washington, DC, on July 30, 2002, of the following debt management advisory committee: The Bond Market Association; Treasury Borrowing Advisory Committee.

The agenda for the meeting provides for a technical background briefing by Treasury staff, followed by a charge by the Secretary of the Treasury or his designate that the Committee discuss particular issues, and a working session. Following the working session, the Committee will present a written report of its recommendations.

The background briefing by Treasury staff will be held at 9 a.m. Eastern time and will be open to the public. The remaining sessions and the committee's reporting session will be closed to the public, pursuant to 5 U.S.C. App. 2, 10(d) and Pub. L. 103–202, § 202(c)(1)(B) (31 U.S.C. 3121 note).

This notice shall constitute my determination, pursuant to the authority placed in heads of departments by 5 U.S.C. App. 2, 10(d) and vested in me by Treasury Department Order No. 101–05, that the closed portions of the meeting are concerned with discussions of the issues presented to the Committee by the Secretary and recommendations of the Committee to the Secretary, pursuant to Pub. L. 103–202, 202(c)(1)(B). Thus, this information is exempt from disclosure under that provision and 5 U.S.C. 552b(c)(3)(B). In addition, the closed portions of the meeting are concerned with information that is exempt from disclosure under 5 U.S.C. 552b(c)(9)(A). The public interest requires that such meetings be closed to the pubic because the Treasury Department requires frank and full advice from representatives of the financial community prior to making its final decision on major financing operations. Historically, this advice has been offered by debt management advisory committees established by the several major segments of the financial community. When so utilized, such a committee is recognized to be an advisory committee under 5 U.S.C. App. 2, 3.

Although the Treasury's final announcement of financing plans may not reflect the recommendations provided in reports of the advisory committee, premature disclosure of the committee's deliberations and reports would be likely to lead to significant financial speculation in the securities market. Thus, these meetings fall within the exemption covered by 5 U.S.C. 552b(c)(9)(A).

The Office of Financial Markets is responsible for maintaining records of debt management advisory committee meetings and for providing annual reports setting forth a summary of committee activities and such other matters as may be informative to the public consistent with the policy of 5 U.S.C. 552b. The Designated Federal Officer or other responsible agency official who may be contacted for additional information is Paul Malvey, Director, Office of Market Finance at 202–622–2630.

Dated: July 9, 2002.

Brian C. Roseboro,
Assistant Secretary, Financial Markets.
[FR Doc. 02–17503 Filed 7–11–02; 8:45 am]
BILLING CODE 4810–25–M

DEPARTMENT OF THE TREASURY

Office of the Comptroller of the Currency

FEDERAL RESERVE SYSTEM

FEDERAL DEPOSIT INSURANCE CORPORATION

DEPARTMENT OF THE TREASURY

Office of Thrift Supervision

Proposed Agency Information Collection Activities; Comment Request

AGENCIES: Office of the Comptroller of the Currency (OCC), Treasury; Board of Governors of the Federal Reserve System (Board); Federal Deposit Insurance Corporation (FDIC); and Office of Thrift Supervision (OTS), Treasury.

ACTION: Joint notice and request for comment.

SUMMARY: In accordance with the requirements of the Paperwork Reduction Act of 1995 (44 U.S.C. chapter 35), the OCC, the Board, the FDIC, and the OTS (the ''agencies'') may not conduct or sponsor, and the respondent is not required to respond to, an information collection unless it displays a currently valid Office of Management and Budget (OMB) control number. The Federal Financial Institutions Examination Council (FFIEC), of which the agencies are members, has approved the agencies' publication for public comment of proposed revisions to the Consolidated Reports of Condition and Income (Call Report) for banks and the Thrift Financial Report (TFR) for savings associations, which are currently approved collections of information. At the end of the comment period, the comments and recommendations received will be analyzed to determine the extent to which the FFIEC should modify the proposed revisions prior to giving its final approval. The agencies will then submit the revisions to OMB for review and approval.

DATES: Comments must be submitted on or before September 10, 2002.

ADDRESSES: Interested parties are invited to submit written comments to any or all of the agencies. All comments, which should refer to the OMB control number(s), will be shared among the agencies.

OCC: Written comments should be submitted to the Communications Division, Office of the Comptroller of the Currency, 250 E Street, SW., Public Information Room, Mailstop 1–5, Attention: 1557–0081, Washington, DC 20219. Due to temporary disruptions in the OCC's mail service, commenters are encouraged to submit comments by fax or electronic mail. Comments may be sent by fax to (202) 874–4448, or by electronic mail to *regs.comments@occ.treas.gov.* Comments will be available for inspection and photocopying at the OCC's Public Information Room, 250 E Street, SW., Washington, DC 20219. Call (202) 874–5043 to make appointments for inspection of comments.

Board: Written comments, which should refer to ''Consolidated Reports of Condition and Income, 7100–0036,'' may be mailed to Ms. Jennifer J. Johnson, Secretary, Board of Governors of the Federal Reserve System, 20th and C Streets, NW., Washington, DC 20551. Due to temporary disruptions in the Board's mail service, commenters are encouraged to submit comments by electronic mail to *regs.comments@federalreserve.gov.* Comments addressed to Ms. Johnson also may be delivered to the Board's mailroom between 8:45 a.m. and 5:15 p.m. weekdays, and to the security control room outside of those hours. Both the mailroom and the security control room are accessible from the Eccles Building courtyard entrance on 20th Street between Constitution Avenue and C Street, NW. Comments received may be inspected in room M–P–500 between 9 a.m. and 5 p.m. on weekdays pursuant to sections 261.12 and 261.14 of the Board's Rules Regarding Availability of Information, 12 CFR 261.12 and 261.14.

FDIC: Written comments should be addressed to Robert E. Feldman, Executive Secretary, Attention: Comments/Legal Division, Federal Deposit Insurance Corporation, 550 17th Street, NW., Washington, DC 20429. All comments should refer to ''Consolidated Reports of Condition and Income, 3064–0052.'' Due to temporary disruptions in the FDIC's mail service, commenters are encouraged to submit comments by fax or electronic mail [Fax number: (202) 898–3838; Internet address: *comments@fdic.gov*]. Comments also may be hand-delivered to the guard station at the rear of the 550 17th Street Building (located on F Street) on business days between 7 a.m. and 5 p.m. Comments may be inspected and photocopied in the FDIC Public Information Center, Room 100, 801 17th Street, NW., Washington, DC, between 9 a.m. and 4:30 p.m. on business days.

OTS: Submit comments by mail to: Information Collection Comments, Chief Counsel's Office, Office of Thrift Supervision, 1700 G Street, NW., Washington, DC 20552; by hand delivery to the Guard's Desk, east lobby entrance 1700 G Street, NW., Washington, DC 20552, on business days between 9 a.m. and 4 p.m.; by facsimile transmission: (202) 906–6518; or by electronic mail to: *infocollection.comments@ots.treas.gov.* All comments should refer to ''TFR Revisions, OMB No. 1550–0023,'' and include your name and phone number. Comments submitted to OTS and the related TFR schedules will be posted on the OTS Internet site at: *http://www.ots.treas.gov.* In addition, interested persons may inspect comments at the Public Reference Room, 1700 G Street, NW., Washington, DC 20552, by appointment. To make an appointment, call 202–906–5922. Appointments will be scheduled on business days between 10 a.m. and 4 p.m.

Acopy of the comments may also be submitted to the OMB desk officer for the agencies: Joseph F. Lackey, Jr., Office of Information and Regulatory Affairs, Office of Management and Budget, New Executive Office Building, Room 10235, Washington, DC 20503 or electronic mail to *jlackeyj@omb.eop.gov.*

FOR FURTHER INFORMATION CONTACT: Sample copies of the proposed new schedule for the Call Report for March 31, 2003, can be obtained at the FFIEC's web site (*www.ffiec.gov*) or may be requested from the agency clearance officers listed below for the OCC, the Board, and the FDIC. Sample copies of the proposed new schedule for the TFR for March 31, 2003, can be obtained at the OTS' web site (*www.ots.treas.gov*) or may be requested from the agency clearance officer listed below for the OTS.

OCC: Jessie Dunaway, OCC Clearance Officer, or Camille Dixon, (202) 874–5090, Legislative and Regulatory Activities Division, Office of the Comptroller of the Currency, 250 E Street, SW., Washington, DC 20219.

Board: Mary M. West, Board Clearance Officer, (202) 452–3829, Division of Research and Statistics, Board of Governors of the Federal Reserve System, 20th and C Streets, NW., Washington, DC 20551. Telecommunications Device for the Deaf (TDD) users may call (202) 263–4869.

FDIC: Tamara R. Manly, Management Analyst, (202) 898–7453, Legal Division, Federal Deposit Insurance Corporation, 550 17th Street NW., Washington, DC 20429.

OTS: William Magrini, Senior Project Manager, Supervision Policy, at (202) 906–5744 or by electronic mail

william.magrini@ots.treas.gov, or Marilyn K. Burton, OTS Paperwork Clearance Officer, at (202) 906–6467 or by electronic mail *marilyn.burton@ots.treas.gov,* Office of Thrift Supervision, 1700 G Street, NW., Washington, DC 20552.

SUPPLEMENTARY INFORMATION: Request for OMB approval to extend, with revisions, the following currently approved collections of information for banks and savings associations.

The agencies estimate that only approximately 130 banks and savings associations (banking institutions) have significant subprime lending programs and would have to complete the entire proposed subprime lending schedule. The agencies further estimate that each of these institutions would need approximately 1 to 1.5 hours to complete this schedule. In addition, other banking institutions with any subprime lending programs would have to complete only a single item on the schedule. Although the agencies do not have an estimate of the number of such banking institutions, they believe that this item would add only a negligible amount of burden. The following burden estimates include the proposed revisions.

1. *Report Title:* Consolidated Reports of Condition and Income (Call Report).

Form Number: FFIEC 031 (for banks with domestic and foreign offices) and FFIEC 041 (for banks with domestic offices only).

Frequency of Response: Quarterly.

Affected Public: Business or other for-profit.

For OCC:

OMB Number: 1557–0081.

Estimated Number of Respondents: 2,200 national banks.

Estimated Time per Response: 42.05 burden hours.

Estimated Total Annual Burden: 370,076 burden hours.

For Board:

OMB Number: 7100–0036.

Estimated Number of Respondents: 978 state member banks.

Estimated Time per Response: 48.25 burden hours.

Estimated Total Annual Burden: 188,754 burden hours.

For FDIC:

OMB Number: 3064–0052.

Estimated Number of Respondents: 5,480 insured state nonmember banks.

Estimated Time per Response: 32.66 burden hours.

Estimated Total Annual Burden: 715,993 burden hours.

The estimated time per response is an average, which varies by agency because of differences in the composition of the banks under each agency's supervision (e.g., size distribution of institutions, types of activities in which they are engaged, and number of banks with foreign offices). The time per response for a bank is estimated to range from 15 to 550 hours, depending on individual circumstances.

2. *Report Title:* Thrift Financial Report (TFR).

Form Number: OTS 1313 (for savings associations).

Frequency of Response: Quarterly.

Affected public: Business or other for profit.

For OTS:

OMB Number: 1550–0023.

Estimated Number of Respondents: 1,000 savings associations.

Estimated Time per Response: 33.8 burden hours.

Estimated Total Annual Burden: 135,200 burden hours.

General Description of Reports

These information collections are mandatory: 12 U.S.C. 161 (for national banks), 12 U.S.C. 324 (for state member banks), 12 U.S.C. 1817 (for insured state nonmember commercial and savings banks), and 12 U.S.C. 1464 (for savings associations). Except for the items covered in this proposal and a limited number of other items, these information collections are not given confidential treatment. Small businesses (i.e., small banks and savings associations) are affected.

Abstract

Banks file Call Reports and savings associations file the TFR with the agencies each quarter for the agencies' use in monitoring the condition, performance, and risk profile of reporting individual banking institutions and the industry as a whole. In addition, Call Reports and TFRs provide the most current statistical data available for evaluating banking institutions' corporate applications such as those for mergers, for identifying areas of focus for both on-site and off-site examinations, and for monetary and other public policy purposes. Call Reports and TFRs also are used to calculate all banking institutions' deposit insurance and Financing Corporation assessments, national banks' semiannual assessment fees, and OTS' assessments on savings associations.

Current Action

I. Overview

The agencies are requesting comment on a proposed revision to the Call Report and the TFR that will enable the agencies to better plan their examinations of banking institutions and to monitor off-site the extent of, changes in, and performance of subprime lending programs at banking institutions. Subprime lending refers to loans to borrowers who have weakened credit histories. The characteristics of a subprime borrower typically include a history of paying debts late, personal bankruptcy filings, or a high debt service-to-income ratio. These borrowers, therefore, pose a higher risk of default than do traditional borrowers at banking institutions. A subprime lending program is the regular or targeted acquisition, through origination or purchase, of loans to subprime borrowers that will be held in portfolio or accumulated for resale.

In May 2000, the OCC, the Board, and the FDIC [1] and, in August 2000, the OTS [2] proposed to collect information on subprime lending in the Call Report and TFR to make possible the early detection and proper supervision of subprime lending through off-site monitoring procedures. Banks involved in subprime lending would have reported quarter-end data for eight categories of subprime loans as well as past due and nonaccrual information and year-to-date charge-offs and recoveries for two broader categories of subprime loans. The agencies recognized that the quality and validity of the proposed Call Report and TFR information depended on a workable definition of subprime lending, which was still in the process of development at that time. The definition of subprime included in the 2000 proposals was based on the definition of the term in the agencies' March 1999 guidance on subprime lending. The agencies also asked for comment on whether information should be collected based on loan portfolios or programs that possess subprime characteristics or individual loans with these characteristics.

The comments received in 2000 on the proposed collections of information on subprime lending in the Call Report and TFR were generally unfavorable, particularly with respect to the agencies' then proposed definition. Furthermore, the commenters overwhelmingly stated that if the agencies did collect subprime lending information, the information should only be collected from banks with subprime lending programs. In addition, the commenters suggested that future requests for comment on a subprime information collection for the Call Report and TFR should be

[1] 65 FR 34801, May 31, 2000.

[2] 65 FR 48049, August 4, 2000.

addressed in a separate proposal dealing only with the subprime information collection issues.

Over the last two years, the agencies have conducted examinations that have confirmed the agencies' contentions that subprime lending programs continue to pose an increased risk to those institutions involved and to the deposit insurance funds. A disproportionate number of the banking institutions on the FDIC's ''problem institution'' list during the past two years have been engaged in subprime lending programs and the volume of loans in these programs has exceeded 25 percent of the institutions' Tier 1 capital.[3] The exact number of institutions involved in subprime lending programs is not known with certainty. However, the agencies estimate that approximately 130 banking institutions currently have significant exposures in the subprime lending business.

The actual extent of banking institutions' involvement in subprime lending programs is not fully known because there is no regular periodic reporting of this activity to the banking agencies. The estimates that have been made come from examination data, but the quality and timeliness of the subprime lending data derived from examination reports is constrained by the lack of standard industry-wide definitions of the terms ''subprime'' and ''program'' and by the length of the examination cycle. The issue of timeliness is particularly troublesome from a safety and soundness perspective because subprime lending programs tend to be a volume-oriented business that encourages rapid portfolio growth. Consequently, there is no reliable way to regularly monitor individual institutions' subprime lending programs between examinations.

II. Current Proposal

This proposal addresses solely the agencies' planned collection of information on subprime consumer lending programs each quarter in the Call Report and TFR beginning March 31, 2003. The agencies continue to believe that a need exists to collect information on subprime lending programs. This information would be the agencies' sole source of off-site data on subprime lending programs. One purpose for which the agencies intend to use these data is to enhance the examination planning process. In addition, the data would provide the agencies with a timely and regular source of information from institutions with subprime consumer lending programs that can be used to monitor the extent of banking institutions' involvement in such programs, including the level of growth in this activity, and the performance of subprime portfolios.

Definitions

Subsequent to the 2000 proposals, the agencies issued Expanded Guidance for Subprime Lending Programs on January 31, 2001. This guidance contains definitions that describe the characteristics of the terms ''program'' and ''subprime.'' Examiners have been using these characteristics during the examination process to determine which institutions have subprime lending programs that, in the aggregate, are greater than or equal to 25 percent of an institution's Tier 1 capital. The agencies propose to use the characteristics described in the Expanded Guidance in the proposed subprime lending program information collection in the Call Report and TFR. These two terms would be defined as follows for purposes of the proposed new schedule:

The term ''program'' refers to the process of acquiring on a regular or targeted basis, through either origination or purchase, loans to subprime borrowers that are to be held in the institution's own portfolio or accumulated and packaged for sale. The average credit risk profile of such programs or portfolios will likely display significantly higher delinquency and/or loss rates than prime portfolios.

Subprime programs include loan products that attract a disproportionate number of borrowers with weakened credit histories, including payday loan and credit repair products. A subprime program also may include cases where an institution regularly purchases loans, such as indirect auto paper, of which disproportionate amounts qualify as loans to subprime borrowers. In addition, an institution should include any program determined to be a subprime lending program by its primary federal regulator. If a reporting institution has a question as to whether it has a subprime lending program, it should contact its primary federal regulator.

The term ''subprime'' refers to the credit characteristics of individual borrowers. Subprime borrowers typically have weakened credit histories that include payment delinquencies, and possibly more severe problems such as charge-offs, judgments, and bankruptcies. The borrowers may also display reduced repayment capacity as measured by credit scores, debt-to-income ratios, or other criteria that may encompass borrowers with incomplete credit histories. Subprime loans are loans to borrowers displaying one or more of these characteristics at the time of *origination* or *purchase.* Such loans have a higher risk of default than loans to prime borrowers. Generally, subprime borrowers will display a range of credit risk characteristics that may include one or more of the following:

- Two or more 30-day delinquencies in the last 12 months, or one or more 60-day delinquencies in the last 24 months;
- Judgment, foreclosure, repossession, or charge-off in the prior 24 months;
- Bankruptcy in the last 5 years;
- Relatively high default probability as evidenced by, for example, a credit bureau risk score (FICO) of 660 or below (depending on the product/collateral), or other bureau or proprietary scores with an equivalent default probability likelihood; and/or
- Debt service-to-income ratio of 50% or greater, or otherwise limited ability to cover family living expenses after deducting total monthly debt-service requirements from monthly income.

This list is illustrative rather than exhaustive and does not define specific parameters for all subprime borrowers. Institutions that have identified borrowers as ''subprime'' based on their own internal rating systems should be reported as such.

For purposes of reporting on the proposed schedule, subprime lending does not refer to individual subprime loans originated and managed, in the ordinary course of business, as occasional exceptions to prime risk selection standards. Additionally, this definition generally does not apply to the following:

- Prime loans that develop credit problems after acquisition.
- Loans initially extended in subprime programs that are later upgraded, because of their performance, to programs targeted to prime borrowers.
- Community development loans as defined in the Community Reinvestment Act regulations that may have some higher risk characteristics, but are otherwise mitigated by guarantees from government programs,

[3] In general, Tier 1 capital is the sum of a banking institution's common stockholders' equity (as defined in the agencies' regulatory capital standards), noncumulative perpetual preferred stock, and minority interests in consolidated subsidiaries, less goodwill and other intangible assets (other than limited amounts of servicing assets and purchased credit card relationships) and less disallowed deferred tax assets and disallowed credit-enhancing interest-only strips. For banks, see Schedule RC–R of the Call Report to calculate Tier 1 capital. For savings associations, see Schedule CCR of the TFR to calculate Tier 1 capital.

private credit enhancements, or other appropriate risk mitigation techniques.

• Institutions that extend credit to subprime borrowers as part of their standard community lending process or make loans to subprime borrowers as an occasional exception.

Scope of Schedule

Subprime lending, by the nature of the definition, is concentrated in the consumer-lending arena. Thus, the proposed schedule covers only information on consumer loans. Furthermore, the agencies are proposing that only banking institutions that are programmatic lenders of subprime consumer loans should complete some or all of this schedule. Banking institutions that do not have any subprime consumer lending programs will not be required to provide any information on this schedule.

All banking institutions that have any subprime consumer lending programs would be required to report the total dollar amount outstanding of loans in those programs as of the quarter-end report date in Part I, item 1. However, only those banking institutions where the total dollar amount outstanding is greater than or equal to 25 percent of the reporting institution's Tier 1 capital as of the report date would be required to complete the detailed items in Parts II, III, and IV of the schedule discussed below. Once an institution reaches the 25 percent of Tier 1 capital threshold, it must continue to complete Parts II, III, and IV of the schedule until it fails to meet the Tier 1 capital threshold for two consecutive quarter-end report dates or for the remainder of the calendar year, whichever is longer.

Detailed Items

The proposed detailed items in Parts II, III, and IV of the schedule would allow the agencies to perform off-site monitoring of the performance of banking institutions with significant exposures to subprime lending. Because these parts of the schedule would be completed only by banking institutions with subprime lending programs of at least 25 percent of Tier 1 capital, the schedule would minimize the information collected from banking institutions with small volumes of loans in subprime lending programs.

Part II collects a breakdown of the total dollar amount of loans in subprime consumer lending programs as of the report date into the following consumer loan categories: open-end and closed-end loans secured by 1–4 family residential properties (with first and junior lien closed-end loans reported separately), credit card loans, loans extended under other revolving credit plans, and other consumer loans. The sum of the amounts outstanding by loan category must equal the total dollar amount reported in Part I.

Part III requires the same breakout of past due and nonaccrual loans as required in Schedule RC–N of the Call Report and Schedule PD of the TFR (i.e., loans past due 30–89 days and still accruing, loans past due 90 days or more and still accruing, and nonaccrual loans) for each category of loans reported in Part II of this schedule. However, loans extended under revolving credit plans other than credit cards and other consumer loans are combined rather than reported separately.

Part IV requires the separate reporting of charge-offs and recoveries as in Schedule RI–B of the Call Report and Schedule VA of the TFR for the same loan categories as in Part III.

III. Confidentiality

The agencies are proposing that the information reported in this schedule be accorded confidential treatment on an individual institution basis. The information requested will provide the agencies with sensitive business data that is needed to aid examiners and supervisory analysts in better evaluating the risk profiles and performance of banking institutions with concentrations of subprime lending programs. This information also will be used to plan the detail and timing of examinations and to provide the agencies with a timely and regular source of information on subprime lending programs, which is not currently available.

The agencies believe that confidential treatment initially should be accorded this information collection because, notwithstanding the Examiner Guidance on Subprime Lending, there is no standard industry-wide approach to the definitions of either ''subprime'' or ''program,'' which means that the meanings of these terms are institution-specific. Thus, the reported information will not be entirely comparable from one institution to the next, leading to potential misinterpretation of the data by the public.

The proposal will not result in the collection of data on all loans to subprime borrowers, but only on subprime lending programs. This outcome occurs because of the supervisory and examination, rather than statistical, focus of the proposed schedule. Moreover, because the focus is also on programs rather than individual loans, attempts to aggregate the reported data across institutions will not provide users with statistics on the overall volume of subprime loans held by banking institutions. For this same reason, the reported data will not reveal whether an individual institution does or does not have loans to subprime borrowers, nor will it reveal the entire amount of the institution's loans to subprime borrowers. As a consequence, care must be taken in interpreting the reported data to avoid reaching improper conclusions.

Furthermore, different institutions may reach different conclusions as to whether one or more of their consumer lending programs are subprime programs and, accordingly, whether their subprime lending programs aggregate 25 percent or more of their Tier 1 capital. The agencies therefore believe that some period of time is needed to ensure that banking institutions understand the proposed definitions and how they may apply to their various lending programs. This will also enable examiners to determine whether institutions are properly applying these definitions and correctly reporting the data.

The agencies also have some concern, due to the sensitive nature of these data, that the release of the subprime lending information before banking institutions and the agencies have adequate experience with it could inhibit the collection of accurate and complete data in the future. Until any potential problems with the newly reported data have been addressed, the agencies believe there is a risk that the data will be misinterpreted and that their release at this time could cause potential harm to an institution or an increased risk to deposit insurance funds. The agencies are initially proposing confidential treatment for the proposed new schedule. However, after experience has been gained with the data, e.g., after six or eight quarters, the agencies will reevaluate whether this treatment should be retained.

IV. Request for Comment

Public comment is requested on all aspects of this proposal. In addition, comments are invited on:

(a) Whether the proposed revisions to the Call Report and TFR collections of information are necessary for the proper performance of the agencies' functions, including whether the information has practical utility;

(b) The accuracy of the agencies' estimates of the burden of the information collections as they are proposed to be revised, including the validity of the methodology and assumptions used;

(c) Ways to enhance the quality, utility, and clarity of the information to be collected;

(d) Ways to minimize the burden of information collections on respondents, including through the use of automated collection techniques or other forms of information technology; and

(e) Estimates of capital or start up costs and costs of operation, maintenance, and purchase of services to provide information.

Comments submitted in response to this Notice will be shared among the agencies and will be summarized or included in the agencies' requests for OMB approval. All comments will become a matter of public record. Written comments should address the accuracy of the burden estimates and ways to minimize burden as well as other relevant aspects of the information collection request.

Dated: July 3, 2002.

Mark J. Tenhundfeld,

Assistant Director, Legislative and Regulatory Activities Division, Office of the Comptroller of the Currency.

Board of Governors of the Federal Reserve System, July 5, 2002.

Robert deV. Frierson,

Secretary of the Board.

Dated at Washington, DC, this 8th day of July, 2002.

Federal Deposit Insurance Corporation

Valerie Best,

Assistant Executive Secretary.

Deborah Dakin,

Deputy Chief Counsel, Regulations and Legislation Division, Office of Thrift Supervision.

[FR Doc. 02–17590 Filed 7–11–02; 8:45 am]

BILLING CODE 4810–33–P, 6210–01–P, 6714–01–P, 6720–01–P

Corrections

Federal Register
Vol. 67, No. 134
Friday, July 12, 2002

This section of the FEDERAL REGISTER contains editorial corrections of previously published Presidential, Rule, Proposed Rule, and Notice documents. These corrections are prepared by the Office of the Federal Register. Agency prepared corrections are issued as signed documents and appear in the appropriate document categories elsewhere in the issue.

DEPARTMENT OF EDUCATION

[CFDA No. 84.361]

Office of Elementary and Secondary Education–Notice Inviting applications for New Awards for Fiscal Year (FY) 2002

Correction

In notice document 02–16889 beginning on page 44815 in the issue of Friday, July 5, 2002, make the following corrections:

On page 44816, in the second and third columns, the text should read as follows:

* * * * *

(c) Partnership/Interdistrict Approach (up to 5 points). The project would establish a partnership that implements an interdistrict approach to carrying out a public school choice program.

These priorities are specified in the authorizing statute for the program (see section 5244 of the ESEA). The priority points are in addition to any points the applicant earns under the selection criteria listed below. The Secretary may select an application that meets a priority over an application of comparable merit that does not meet the priority. The maximum number of points an application may earn based on the priority points and the selection criteria is 115 points.

Selection Criteria: The Secretary will use the selection criteria in 34 CFR 75.210 and selection criteria based on statutory provisions to evaluate applications for new grants under this competition. The maximum possible score for all of the selection criteria is 100 points. The maximum score for each criterion is indicated in parenthesis with the criterion. The criteria are as follows:

(a) *Need for the Project* (up to 10 points). The Secretary considers the need for the proposed project. In determining the need for the proposed project, the Secretary considers the magnitude of the need for the services to be provided or the activities to be carried out by the proposed project.

(b) Significance (up to 15 points). The Secretary considers the significance of the proposed project. In determining the significance of the proposed project, the Secretary considers the following factors:

(1) The likelihood that the proposed project will result in system change or improvement.

(2) The extent to which the proposed project is likely to build local capacity to provide, improve, or expand services (*i.e.*, choice options) that address the needs of the target population.

(3) The potential replicability of the proposed project or strategies, including, as appropriate, the potential for implementation in a variety of settings.

(c) *Quality of Project Design* (up to 40 points). The Secretary considers the quality of the design of the proposed project. In determining the quality of the design of the proposed project, the Secretary considers the following factors:

(1) The extent to which the proposed project encourages parental involvement and ensures that parents have high-quality information about their choices.

(2) The extent to which the goals, objectives, and outcomes to be achieved by the proposed project are clearly specified and measurable.

(3) The extent to which the design for implementing and evaluating the proposed project will result in information to guide possible replication of project activities or strategies, including information about the effectiveness of the approach or strategies employed by the project.

(4) The extent to which the proposed project is designed to build capacity and yield results that will extend beyond the period of Federal financial assistance.

(5) The extent to which the design of the proposed project reflects up-to-date knowledge from research and effective practice.

(6) The extent to which the proposed project will be coordinated with similar or related efforts, and with other appropriate community, State, and Federal resources.

(d) *Quality of Project Services* (up to 25 points). The Secretary considers the quality of the services to be provided by the proposed project. In determining the quality of the services to be provided by the proposed project, the Secretary considers the following factors:

(1) The likelihood that the services to be provided by the proposed project will lead to improvements in the achievement of students, as measured against rigorous academic standards.

(2) The extent to which the services to be provided by the proposed project involve the effective collaboration of appropriate partners for maximizing the effectiveness of project services.

(3) The quality and sufficiency of strategies for ensuring equal access and treatment for eligible project participants who are members of groups that have traditionally been underrepresented based on race, color, national origin, gender, age, or disability.

(e) *Quality of Management Plan* (up to 10 Points). The Secretary considers the quality of the management plan for the proposed project. In determining the quality of the management plan for the proposed project, the Secretary considers the adequacy of the management plan to achieve the objectives of the proposed project on time and within budget, including whether it includes clearly defined responsibilities, timelines, and milestones for accomplishing project tasks.

Required Use of Funds

An eligible entity that receives a grant under this subpart must use grant funds to provide students selected to participate in the program with transportation services or to pay the cost of transportation to and from the public elementary schools and secondary schools, including, if applicable, charter schools, that the students choose to attend under the program.

* * * * *

[FR Doc. C2–16889 Filed 7–11–02; 8:45 am]
BILLING CODE 1505–01–D

Federal Register

Friday,
July 12, 2002

Part II

Environmental Protection Agency

40 CFR Part 63

National Emission Standards for Hazardous Air Pollutants: Generic Maximum Achievable Control Technology; Final Rules and Proposed Rule

ENVIRONMENTAL PROTECTION AGENCY

40 CFR Part 63

[FRL–7215–7]

RIN 2060–AH68

National Emission Standards for Hazardous Air Pollutants: Generic Maximum Achievable Control Technology

AGENCY: Environmental Protection Agency (EPA).

ACTION: Final rule; amendments.

SUMMARY: This action promulgates amendments to the ''generic'' maximum achievable control technology (MACT) standards to add national emission standards for hazardous air pollutants (NESHAP) for four additional source categories: Cyanide Chemicals Manufacturing, Carbon Black Production, Ethylene Production, and Spandex Production. The generic MACT standards provide a structural framework that allows source categories with similar emission types and MACT control requirements to be covered under one subpart, thus promoting regulatory consistency in NESHAP development. The EPA has identified these four source categories as major sources of hazardous air pollutants (HAP), including cyanide compounds, acrylonitrile, acetonitrile, carbonyl sulfide, carbon disulfide, benzene, 1,3 butadiene, toluene, and 2,4 toluene diisocyanate (TDI). Benzene is a known human carcinogen, and 1,3 butadiene is considered to be a probable human carcinogen. The other pollutants can cause noncancer health effects in humans. These standards will implement section 112(d) of the Clean Air Act (CAA) by requiring all major sources to meet HAP emission standards reflecting the application of MACT. This action also promulgates NESHAP for the heat exchange systems and wastewater operations at ethylene manufacturing facilities.

EFFECTIVE DATE: July 12, 2002.

ADDRESSES: Docket No. A–97–17 contains supporting information used in developing the generic MACT standards. Dockets established for each of the source categories to be assimilated under the generic MACT standards with this action include: Cyanide Chemicals Manufacturing (Docket No. A–2000–14), Carbon Black Production (Docket No. A–98–10), Ethylene Production (Docket No. A–98–22), and Spandex Production (Docket No. A–98–25). These dockets include source-category-specific supporting information. All dockets are located at the U.S. EPA, Air and Radiation Docket and Information Center, Waterside Mall, Room M–1500, Ground Floor, 401 M Street SW, Washington, DC 20460, and may be inspected from 8:30 a.m. to 5:30 p.m., Monday through Friday, excluding legal holidays.

FOR FURTHER INFORMATION CONTACT: For further information concerning applicability and rule determinations, contact the appropriate State or local agency representative. If no State or local representative is available, contact the EPA Regional Office staff listed in 40 CFR 63.13. For information concerning the analyses performed in developing the NESHAP, contact the following at the Emission Standards Division, U.S. EPA, Research Triangle Park, North Carolina 27711:

Information type	Contact (mailcode)	Group	Phone/facsimile/ e-mail address
General	Mark Morris (C50404)	Organic Chemicals Group.	(919) 541–5416/(919) 541–3470/morris.mark@epa.gov
Cyanide Chemicals Manufacturing.	Keith Barnett (C50405)	Organic Chemicals Group.	(919) 541–5605/(919) 541–3470/barnett.keith@epa.gov
Carbon Black Production	John Schaefer (C50404)	Organic Chemicals Group.	(919) 541–0296/(919) 541–3470/schaefer.john@epa.gov
Ethylene Production	Warren Johnson (C50404).	Organic Chemicals Group.	(919) 541–5267/(919) 541–3470/johnson.warren@epa.gov
Spandex Production	Elaine Manning (C43903).	Waste and Chemical Processes Group.	(919) 541–5499/(919) 541–3470/manning.elaine@epa.gov

SUPPLEMENTARY INFORMATION: *Docket.* The docket is an organized and complete file of all the information considered by the EPA in the development of this rulemaking. The docket is a dynamic file because material is added throughout the rulemaking process. The docketing system is intended to allow members of the public and industries involved to readily identify and locate documents so that they can effectively participate in the rulemaking process. Along with the proposed and promulgated standards and their preambles, the contents of the docket will serve as the record in the case of judicial review. (*See* section 307(d)(7)(A) of the CAA.) The regulatory text and other materials related to this rulemaking are available for review in the docket or copies may be mailed on request from the Air Docket by calling (202) 260–7548. A reasonable fee may be charged for copying docket materials.

Public Comments. The NESHAP for the four source categories mentioned above were proposed on December 6, 2000 (65 FR 76408). The comment letters received on the proposal are available in Docket No. A–97–17 or the dockets established for the four source categories (*see* **ADRESSESS**), along with a summary of the comment letters and EPA's responses to the comments. In response to the public comments, EPA adjusted the final NESHAP where appropriate.

Worldwide Web (WWW). In addition to being available in the docket, an electronic copy of today's final NESHAP will also be available on the WWW through the Technology Transfer Network (TTN). Following the Administrator's signature, a copy of the NESHAP will be posted on the TTN's policy and guidance page for newly proposed or final rules at *http://www.epa.gov/ttn/oarpg/t3pfpr.html.* The TTN provides information and technology exchange in various areas of air pollution control. If more information regarding the TTN is needed, call the TTN HELP line at (919) 541–5384.

Regulated Entities. Categories and entities potentially regulated by this action include:

Category	NAICS code	SIC code	Examples of regulated entities
Industrial	325188, 325199	2819, 2869	Producers and coproducers of hydrogen cyanide and sodium cyanide.
	325182	2895	Producers of carbon black by thermal-oxidative decomposition in a closed system, thermal decomposition in a cyclic process, or thermal decomposition in a continuous process.
	325110	2869	Producers of ethylene from refined petroleum or liquid hydrocarbons.
	325222	2824	Producers of spandex.

This table is not intended to be exhaustive, but rather provides a guide for readers regarding entities likely to be regulated by this action. Not all facilities classified under the NAICS or SIC codes are affected. Other types of entities not listed could be affected. To determine whether your facility is regulated by this action, you should examine the applicability criteria in § 63.1104 of the final NESHAP. If you have any questions regarding the applicability of this action to a particular entity, consult the person listed in the preceding **FOR FURTHER INFORMATION CONTACT** section.

Judicial Review: The NESHAP were proposed on December 6, 2000 (65 FR 76408). This action announces EPA's final decisions on the NESHAP. Under section 307(b)(1) of the CAA, judicial review of the final NESHAP is available by filing a petition for review in the U.S. Court of Appeals for the District of Columbia Circuit by September 10, 2002. Only those objections to the NESHAP which were raised with reasonable specificity during the period for public comment may be raised during judicial review. Under section 307(b)(2) of the CAA, the requirements that are the subject of today's final NESHAP may not be challenged later in civil or criminal proceedings brought by EPA to enforce these requirements.

Outline. The information presented in this preamble is organized as follows:

I. Introduction
A. What Is the Purpose of the NESHAP?
B. What is the source of authority for development of NESHAP?
C. What criteria are used in the development of NESHAP?
D. Why is the EPA including today's standards in the generic MACT standards?
II. Summary of Major Comments and Changes Since Proposal to 40 CFR Part 63, Subpart YY and the Referenced Subparts
III. Cyanide Chemicals Manufacturing
A. Summary of Environmental, Energy, Cost, and Economic Impacts
B. Summary of Major Comments and Changes Since Proposal
IV. Carbon Black Production
A. Summary of Environmental, Energy, Cost, and Economic Impacts
B. Summary of Major Comments and Changes Since Proposal
C. New Source Review/Prevention of Significant Deterioration Applicability
V. Ethylene Production
A. Summary of Environmental, Energy, Cost, and Economic Impacts
B. Summary of Major Comments and Changes Since Proposal
VI. Spandex Production
A. Summary of Environmental, Energy, Cost and Economic Impacts
B. Summary of Major Comments and Changes Since Proposal
VII. Administrative Requirements
A. Executive Order 12866, Regulatory Planning and Review
B. Executive Order 13132, Federalism
C. Executive Order 13175, Consultation and Coordination with Indian Tribal Governments
D. Executive Order 13045, Protection of Children from Environmental Health Risks and Safety Risks
E. Unfunded Mandates Reform Act of 1995
F. Regulatory Flexibility Act (RFA) as Amended by the Small Business Regulatory Enforcement Fairness Act of 1996 (SBREFA), 5 U.S.C. 601, *et seq.*
G. Paperwork Reduction Act
H. National Technology Transfer and Advancement Act
I. Congressional Review Act
J. Executive Order 13211, Actions Concerning Regulations That Significantly Affect Energy Supply, Distribution, or Use

I. Introduction

A. What Is the Purpose of the NESHAP?

The purpose of the final NESHAP is to protect the public health by reducing emissions of HAP from facilities in four source categories: Cyanide Chemicals Manufacturing, Carbon Black Production, Ethylene Production, and Spandex Production.

B. What Is the Source of Authority for Development of NESHAP?

Section 112 of the CAA requires us to list categories and subcategories of major sources and area sources of HAP and to establish NESHAP for the listed source categories and subcategories. The four categories of major sources for which NESHAP are being established by today's action were listed on the following dates: Cyanide Chemicals Manufacturing, July 16, 1992 (57 FR 31576) and February 12, 1998 (63 FR 6291); Carbon Black Production, June 4, 1996 (61 FR 28197); Ethylene Production, June 4, 1996 (61 FR 28197); and Spandex Production, July 16, 1992 (57 FR 31576). Major sources of HAP are those that have the potential to emit greater than 10 tons per year (tpy) of any one HAP or 25 tpy of any combination of HAP.

C. What Criteria Are Used in the Development of NESHAP?

Section 112 of the CAA requires that we establish NESHAP for the control of HAP from both new and existing major sources. The CAA requires the NESHAP to reflect the maximum degree of reduction in emissions of HAP that is achievable. This level of control is commonly referred to as the MACT.

The MACT floor is the minimum control level allowed for NESHAP and is defined under section 112(d)(3) of the CAA. In essence, the MACT floor ensures that the standard is set at a level that assures that all major sources achieve the level of control at least as stringent as that already achieved by the better-controlled and lower-emitting sources in each source category or subcategory. For new sources, the MACT floor cannot be less stringent than the emission control that is achieved in practice by the best-controlled similar source. The MACT standards for existing sources can be less stringent than standards for new sources, but they cannot be less stringent than the average emission limitation achieved by the best-performing 12 percent of existing sources in the category or subcategory (or the best-performing five sources for categories or subcategories with fewer than 30 sources).

In developing MACT, we also consider control options that are more stringent than the floor. We may establish standards more stringent than the floor based on the consideration of cost of achieving the emissions reductions, any health and

environmental impacts, and energy requirements.

D. Why Is the EPA Including Today's Standards in the Generic MACT Standards?

We are including NESHAP for the Cyanide Chemicals Manufacturing, Carbon Black Production, Ethylene Production, and Spandex Production source categories under the generic MACT standards to reduce the regulatory burden associated with the development of separate rulemakings. An owner or operator should consult the generic MACT standards for information on applicability of the standards to their source, compliance schedules, and standards. The generic MACT standards generally refer the owner or operator to other subparts for requirements necessary to demonstrate compliance.

We are including the NESHAP for the Cyanide Chemicals Manufacturing, Carbon Black Production, Ethylene Production, and Spandex Production source categories in the generic MACT standards to simplify the rulemaking process, to minimize the potential for duplicative or conflicting requirements, to conserve limited resources, and to ensure consistency of the air emissions requirements applied to similar emission points. We believe that the generic MACT regulatory framework is appropriate for these source categories because it allows us to incorporate specific applicability and control requirements that reflect our decisions on these source categories while also utilizing generic requirements previously established for similar emission sources that we have determined are also applicable here.

II. Summary of Major Comments and Changes Since Proposal to 40 CFR Part 63, Subpart YY and the Referenced Subparts

The major comments received regard the performance specifications for continuous parameter monitoring systems (CPMS) that were proposed as an amendment to the referenced 40 CFR part 63, subpart SS. Other comments received on subpart YY and the referenced subparts and the responses to those comments are in Docket No. A–97–17.

Several commenters stated that the proposed performance specifications for CPMS would be costly and would not provide an environmental benefit. We proposed performance specifications for CPMS to ensure that such systems are installed, calibrated, and operated in a manner that would yield accurate and reliable information regarding the performance of closed vent systems and control devices. Subpart SS currently states that ''all monitoring equipment shall be installed, calibrated, maintained, and operated according to manufacturer's specifications or other written procedures that provide adequate assurance that the equipment would reasonably be expected to monitor accurately.'' Therefore, owners and operators are already required by subpart SS to follow written performance specifications, but not necessarily the ones that we proposed in the amendments.

We have decided not to include the performance specifications for CPMS in the final subpart SS for two reasons. First, the number and complexity of the comments would not allow for the expeditious promulgation of the standards for the four source categories we are including under subpart YY. Second, we are currently developing performance specifications for CPMS to be followed by owners and operators of all sources subject to standards under 40 CFR part 63.

Since owners and operators subject to subpart SS are currently required to follow specifications for CPMS, even though they may not be as specific as those we proposed, we have decided to wait for the rulemaking that will propose performance specifications for all of 40 CFR part 63. We decided it would be premature to promulgate performance specifications for subpart SS when the performance specifications that would ultimately be promulgated for all of 40 CFR part 63 may be significantly different as a result of possible public comments received on that rulemaking.

III. Cyanide Chemicals Manufacturing

A. Summary of Environmental, Energy, Cost, and Economic Impacts

1. What Are the Air Quality Impacts?

Nationwide baseline HAP emissions are estimated to be 238 megagrams per year (Mg/yr) (263 tpy). The final standards will reduce HAP emissions by approximately 106 Mg/yr (117 tpy). This is a 45 percent HAP emission reduction from the baseline level for this source category and a 58 percent reduction for those facilities required to install controls to comply with the final standards.

We also estimate that the final standards will reduce emissions of volatile organic compounds (VOC) by 102 Mg/yr (113 tpy). We estimate that the final standards will result in an increase in sulfur oxides (SO_X) emissions of 7.3 Mg/yr (8 tpy), an increase in nitrogen oxides (NO_X) emissions of 10.3 Mg/yr (11.4 tpy), an increase in carbon monoxide (CO) emissions of 42.1 Mg/yr (46.4 tpy), and an increase in particulate matter (PM) emissions of 0.3 Mg/yr (0.3 tpy). Increases in emissions would result from on-site combustion of fossil fuels and emission streams because of control device operations.

2. What Are the Non-Air Health, Environmental, and Energy Impacts?

We believe that there will not be significant adverse non-air health, environmental or energy impacts associated with the final standards. This is supported by impacts analyses associated with the application of the control and recovery devices required under the final standards. We determine impacts relative to the baseline that is set at the level of control in absence of the rule.

Control of equipment leaks is expected to reduce the amount of HAP-containing material that would be discharged to a facility's wastewater treatment stream through equipment washdown or from stormwater runoff.

The use of a scrubber for HAP control of emissions from vents will create HAP-containing effluent. It is anticipated that any wastewater stream created from the use of a scrubber would be treated at a facility's wastewater treatment system with other waste streams.

There are minimal solid or hazardous waste impacts expected as a result of the final standards. A small amount of solid waste may result from replacement of equipment such as seals, packing, rupture disks, and other equipment components, such as pumps and valves. A minimum amount of solid or hazardous waste could also be generated from the use of steam strippers to control wastewater emissions. The possible sources generated include organic compounds recovered in the steam stripper overhead condenser or solids removed during feed pretreatment.

The energy demands associated with the final standards will result from the use of additional electricity, natural gas, and fuel oil to run control equipment. The storage tank, transfer operations, equipment leak, and wastewater controls are not expected to require any additional energy. The total nationwide energy demand that would result from implementing the process vent controls is approximately 3.1×10^{14} Joules per year.

3. What Are the Cost and Economic Impacts?

The total estimated capital cost of the final standards is $939,000. The total estimated annual cost of the final standards is $2.4 million. These costs represent fourth quarter 1998 dollars.

We prepared an economic impact analysis to evaluate the impacts that the final standards would have on the cyanide manufacturing market, consumers, and society. The total annualized social cost (in 1998 dollars) of the final standards on the industry is $2.4 million, which is much less than 0.001 percent of total baseline revenue for the affected sources. A screening analysis indicates that no individual firm affected by the final standards for the cyanide chemicals manufacturing source category would experience costs in excess of 0.001 percent of sales. For this reason, we believe that the impact of the final standards will be minimal. No cyanide chemicals manufacturing facility closures are expected.

B. Summary of Major Comments and Changes Since Proposal

In response to comments received on the proposed standards, we made several changes to the final standards, as well as some clarifications designed to make our intentions clearer. The substantive comments and/or changes and responses made since the proposal are summarized in the following paragraphs. Our complete responses to public comments are contained in a memorandum that can be obtained from the docket (see **ADDRESSES** section).

1. Applicability of the Rule

Some commenters expressed that there was potential for confusion regarding the applicability of the rule. One commenter requested that we specifically exempt downstream equipment from the cyanide chemicals manufacturing NESHAP if the equipment is subject to another NESHAP.

Another commenter expressed that confusion regarding the overlapping requirements affecting the same equipment could be reduced if refined hydrogen cyanide (HCN) ''burned on-site as a fuel in a boiler or industrial furnace'' was excluded as part of the HCN process. The commenter explained that some producers that generate HCN as a byproduct of acrylonitrile manufacture opt to burn the byproduct HCN on-site as a fuel in boilers and/or industrial furnaces where its end use is regulated under other standards.

One commenter requested that we clarify and restrict the applicability of the rule by revising the definition of ''CCMPU'' as follows:

Cyanide chemicals manufacturing process unit or CCMPU means the equipment assembled and connected by hard-piping or duct work to process raw materials to manufacture, store, and transport a cyanide chemicals product. A cyanide chemicals manufacturing process unit shall be limited to any one of the following: an Andrussow process unit, a BMA process unit, a sodium cyanide process unit, or a Sohio hydrogen cyanide process unit * * *.

The commenter explained that, as proposed, the definition of CCMPU could include a chemical manufacturing process unit that creates HCN or sodium cyanide as an incidental or unintended byproduct that could be considered an affected source subject to the cyanide chemicals manufacturing requirements. The commenter stated that this clarification could also be fulfilled by modifying the definition for ''cyanide chemicals product,'' as follows:

Cyanide chemicals product means either hydrogen cyanide or sodium cyanide which is manufactured as the intended product of a CCMPU or a byproduct of the Sohio process. Other hydrogen cyanide or sodium cyanide byproducts, impurities, wastes and trace contaminants are not considered to be cyanide chemicals products.

Based on comments received, we made a few changes to the final standards. To avoid overlapping requirements applying to downstream boilers and/or industrial furnaces, we excluded HCN vent streams used for fuel value in boilers and/or industrial furnaces from HCN chemical manufacturing processes. Exclusion of these boilers and industrial furnaces that use vented emissions for fuel value from the requirements of the cyanide chemicals manufacturing process control requirements is consistent with what is done in other MACT standards.

We also made the commenter's suggested amendments to the ''CCMPU'' and ''cyanide chemicals product'' definitions in the final standards. These amendments were made because the intent of the commenter's suggested amendments is consistent with our intent, and we believe that the amended definitions will reduce any potential confusion regarding the applicability of the rule.

2. Process Vent Standards

BMA/Andrussow process vent MACT control level. During our evaluation of comments received on the proposed process vent standards, we reevaluated the MACT level of control established for BMA/Andrussow process vents. Based on our reevaluation, we decided to remove from the MACT analyses HCN rich vent streams that are routed to a boiler or industrial furnace for use as fuel. We did this to be consistent with other NESHAP and because these vent streams are already regulated by other standards. Once we removed these streams and adjusted the floor based on new information received from industry, the MACT floor and MACT level of control was determined to reduce HAP emissions by 98 weight-percent (rather than by 99 weight-percent) or to a concentration level of 20 parts per million by volume (ppmv). Therefore, the final standards have been modified to require that you reduce HAP emissions from Andrussow/BMA process vents by 98 weight-percent (rather than by 99 weight-percent), or to a concentration level of 20 ppmv. Because the MACT level of control has been changed to 98 weight-percent, the final standards also allow you to comply with the requirements for Andrussow/BMA process vents by routing emissions to a flare.

Wet-end process vents. One commenter requested that the final standards clarify that cyanide chemical manufacturing wastewater collection systems and treatment equipment (tanks) containing discarded wastewater are not part of the process and are not subject to the process vent requirements. The commenter explained that weak HAP and cyanide bearing wastewater is sent to, and handled in, on-site wastewater collection and treatment systems and collected in sumps and pumped into tanks where the wastewater is either recycled to recover HCN, or treated in these tanks by hydrolysis and alkaline chlorination. The commenter stated that such vents should be clarified to be subject to the requirements specified for process and maintenance wastewater control requirements under 40 CFR 63.1106 (a) and (b).

Based on this comment, we evaluated the wet end of the sodium cyanide process unit regarding the clarity of the applicability of the wet-end process vent requirements versus the applicability of discarded process wastewater vent requirements. Based on the definitions for ''wet-end process vent,'' ''wastewater,'' and ''process wastewater,'' applicability of requirements appeared to be clear. However, to avoid any potential applicability confusion, the final standards include an amended definition for ''wet-end process vent'' that specifically clarifies that discarded water that is no longer used in the production process is considered to be process wastewater and that vents from process and maintenance wastewater

operations are not wet-end process vents.

Annual emissions. One commenter stated that the MACT floor determination for Andrussow/BMA process vents was based on annual emissions and the proposed standards require compliance with the floor level of control based on a formula that calculates an overall HAP emission reduction based on hourly emission rates. The commenter requested that compliance be based on meeting the proposed weight-percent reduction on an annual basis to be consistent with the MACT floor. The commenter also requested that Item 2 of Table 9 be modified as follows:

a. Reduce the overall annual emission of total HAP from the collection of process vents from continuous unit operations in the process unit by 99 weight-percent in accordance with paragraph (g)(4) of this section.

We agree that the MACT floor for Andrussow/BMA process vents was based on annual emissions and, therefore, compliance with MACT should also be based on annual emissions. We have amended the final standards (Item 2 of Table 9 of § 63.1103(g)) as suggested by the commenter.

3. Unsafe-to-Monitor Equipment

Two commenters expressed safety concerns with the proposed leak detection and repair (LDAR) provisions. It was expressed that many of the lines in HCN service are intentionally placed in out-of-the-way locations to minimize risk in the event of a leak. One commenter requested that we either exempt ''unsafe-to-monitor'' equipment components from the LDAR program or stay implementation of these requirements to allow adequate opportunity to investigate safer methods than those proposed. The commenter explained that a large percentage of pipeline components in HCN service that would be subject to the proposed LDAR provisions are elevated and are not accessible during operation due to safety concerns. The commenter stated that facilities already have procedures in place to ensure that there are no leaks when equipment is in HCN service. Industry feedback indicates that HCN equipment is unsafe to monitor at all times that equipment is in operation.

Based on our evaluation of the comments received regarding safety concerns with the proposed LDAR provisions, we concur that there are some equipment components that may never be safe to monitor. Therefore, we have added language to the final standards specifying that you are allowed to designate ''unsafe-to-monitor'' equipment with your Notification of Compliance Status report. If it is demonstrated to the Administrator's satisfaction that designated equipment is never safe to monitor, you would not be required to monitor the designated equipment.

4. Hydrogen Fueled Flares

Destruction efficiency. One commenter expressed that a 99%+ destruction efficiency is supported for hydrogen flares based on data included in the EPA's ''Basis for Hydrogen Flaring'' report. The commenter stated that these data were based on test methods developed with the EPA and a special flare test-rig built for the experiment.

Another commenter requested that we add language to 40 CFR 63.1103(g)(4)(ii)(B) to allow an owner or operator of a cyanide manufacturing facility to include a flare control efficiency greater than 98% in the calculation of the overall HAP emission reduction, provided they can demonstrate a higher control efficiency based on technically relevant measurements that are of sufficient quality, considering data variability.

We agree with the commenters that an owner or operator of a cyanide manufacturing facility should be allowed to include a flare control efficiency greater than 98% in the calculation of their overall HAP emission reduction provided they can demonstrate a higher control efficiency for their flare. Therefore, the final standards allow an owner or operator to include a flare control efficiency greater than 98% in the calculation of their overall HAP emission reduction if they can demonstrate, to the Administrator's satisfaction, a greater control efficiency (40 CFR 63.1103(g)(4)(ii)(A)).

Flare compliance monitoring requirements. Several commenters recommended that a waiver from testing for all HCN flares be granted. Specifically, one commenter requested a waiver from testing of the net heating value using EPA Method 18, and two commenters requested that a waiver from testing the velocity, using EPA Method 2, 2A, 2C, or 2D of 40 CFR part 60, appendix A, be granted (40 CFR 63.11(b)(6)(ii) and (7)(i), respectively). One commenter expressed that flow velocity testing using EPA Method 2, 2A, 2C, 2D, or 2G of 40 CFR part 60, appendix A, require the insertion of a probe into the waste gas stream which poses safety risks.

Based on comments received regarding it being unsafe to test HCN-rich vent streams to flares, and our evaluation of the comments, we have included provisions in the final standards that allow an owner or operator to submit engineering calculations and/or data to substantiate that flares meet applicable heat content and flow rates under worst case conditions (40 CFR 63.987(b)(3)(v) and (4)).

IV. Carbon Black Production

A. Summary of Environmental, Energy, Cost, and Economic Impacts

1. What Are the Air Quality Impacts?

We estimate that the final NESHAP will reduce HAP emissions by 1,830 Mg/yr (2,020 tpy). This is a 26 percent HAP emission reduction from the total baseline HAP emissions, and a 95 percent HAP emission reduction for those facilities required to install controls to meet the standards.

We estimate that the final NESHAP will reduce CO emissions by 474,000 Mg/yr (522,000 tpy); VOC by 16,900 Mg/yr (18,600 tpy); hydrogen sulfide by 10,300 Mg/yr (11,300 tpy); and PM by 740 Mg/yr (820 tpy). We estimate that the final NESHAP will increase SO_X emissions by 32,900 Mg/yr (36,200 tpy) as a result of on-site combustion of fossil fuels. However, the air quality benefits of the final NESHAP (i.e., reduction in HAP, CO, VOC, and hydrogen sulfide emissions) outweigh the negative impacts associated with the anticipated increases in emissions of SO_X and NO_X.

2. What Are the Cost and Economic Impacts?

The total estimated capital cost of the final NESHAP is $54.9 million. The total estimated annual cost of the final NESHAP is $11.2 million. These costs represent fourth quarter 1998 dollars.

We prepared an economic impact analysis to evaluate the impacts the final NESHAP will have on the industry, market, consumers, and society. The total annualized social cost (in 1997 dollars) of the final NESHAP to the industry is $11.2 million, which is less than 0.001 percent of total baseline revenue for the affected sources. A screening analysis suggests only one of the firms affected by the final NESHAP will experience costs in excess of 1 percent of sales, and no firm will experience costs in excess of 1.5 percent of sales. For this reason, we believe that the impact of the final NESHAP will be minimal. We expect no facility closures as a result of the final NESHAP.

3. What Are the Non-Air Health, Environmental, and Energy Impacts?

We believe that there will not be any significant adverse non-air health, environmental or energy impacts associated with the final NESHAP. This is supported by impacts analyses associated with the application of control and recovery devices required under the final NESHAP.

There are no water pollution or solid waste impacts expected from the use of air emission control devices as a result of the final NESHAP. An increase in energy consumption will result from the use of combustion control systems. We estimate that carbon black production facilities will consume an additional 186 million cubic feet of natural gas per year to meet the regulatory requirements of the final NESHAP. This represents an increase in total domestic natural gas consumption of less than 1/100th of one percent.

B. Summary of Major Comments and Changes Since Proposal

In response to comments received on the proposed standards for the Carbon Black Production source category, we made several changes to the final NESHAP. Only one substantive change was made based on comments received on the proposal. We have summarized the relevant comment/change made in the following paragraphs. Our complete responses to public comments are contained in a memorandum that can be obtained from the docket (see **ADDRESSES** section).

One commenter requested an exemption from the closed vent system initial and annual closed vent system inspection requirements. The commenter expressed that certain safety features are incorporated into their closed vent system operations to protect against overpressure in the case of catastrophic failure of their process filter systems. Concern was expressed that the proposed initial and annual closed vent system inspection requirements may defeat these safety measures because cost-effective technology to provide leak proof seals for the extreme operating temperature ranges that occur in the carbon black production process is not available. The commenter explained that the catastrophic loss of a bag filter due to gaseous build-up and failure can result in ignition of gases, fires, and explosions. In order to prevent the failure of the compartments, industry isolates the failed compartment from the process. Safety relief valves (e.g., weighted-lid systems) are designed into the system to relieve excess pressures, to prevent fires and explosions, and to prevent loss of compartments. The commenter explained that a typical pressure relief device used in carbon black production does not seal 100 percent, but that the process emits very small amounts of HAP, and single bag failure results in emissions that lead to opacity exceedances.

We evaluated the commenter's concerns and request for exemption from closed vent system inspection requirements for specified pressure relief devices used to protect against overpressure in the case of catastrophic failure of their process filter systems. Based on safety concerns and technology considerations, we have included provisions in the final NESHAP that exempt pressure relief devices that meet specified criteria (i.e., devices used to protect against overpressure in the case of catastrophic failure of the process filter system) from the closed vent system inspection requirements of 40 CFR 63.983(b) and (c). The final NESHAP require that exempted pressure relief devices meeting criteria specified in the NESHAP be identified in your Notification of Compliance Status report.

C. New Source Review/Prevention of Significant Deterioration Applicability

A question arose concerning the potential installation of cogeneration technology at carbon black plants which would recover waste heat and gas for use as a fuel input for power generation. This technology could potentially be used to meet the HAP control requirements of the NESHAP. However, cogeneration may result in NO_X emissions during normal operation. If NO_X emission increases are great enough, they may trigger the need for preconstruction permits under the nonattainment new source review (NSR) or prevention of significant deterioration (PSD) program. It is possible, however, that we could consider the application of cogeneration technology to be a pollution control project (PCP), as defined within the context of PSD and NSR, such that cogeneration facilities installed as a result of the NESHAP would qualify for an exemption from NSR/PSD.

In 1992, we adopted an explicit PCP exclusion for electric utility steam generating units (57 FR 32314). In a July 1, 1994, guidance memorandum, we provided guidance to permitting authorities on the approvability of PCP exclusions for source categories other than electric utilities. In that guidance (available at *http://www.epa.gov/rgytgrnj/programs/artd/air/nsr/nsrmemos/pcpguide.pdf*), we indicated that add-on controls and fuel switches to less polluting fuels may qualify for an exclusion from major NSR as a PCP. To be eligible to be excluded from otherwise applicable major NSR requirements, a PCP must, on balance, be ''environmentally beneficial,'' and the permitting authority must ensure that the project will not cause or contribute to a violation of the national ambient air quality standards (NAAQS) or PSD increment, or adversely affect visibility or other air quality related values (AQRV) in a Class I area, and that offsetting reductions are secured in the case of a project which would result in a significant increase of a nonattainment pollutant. The permitting authority can make these determinations outside of the major NSR process. The 1994 guidance did not supercede existing NSR requirements, including approved State NSR programs, nor void or create an exclusion from any applicable minor source preconstruction review requirements in an approved State implementation plan (SIP). Any minor NSR permitting requirements in a SIP would continue to apply, regardless of any exclusion from major NSR that might be approved for a source under the PCP exclusion policy.

We believe that the current guidance on the PCP exclusion adequately provides for the possible exemption from major NSR for cogeneration technology resulting from the NESHAP. Permitting authorities should follow that guidance to the extent allowed under the applicable SIP in order to determine whether the installation of cogeneration technology in a given circumstance qualifies as a PCP. Projects that qualify for the exclusion would be covered under minor source regulations in the applicable SIP, and permitting authorities would be expected to provide adequate safeguards against NAAQS and increment violations and adverse impacts on AQRV in Federal Class I areas. Only in those areas where potential adverse impacts cannot be resolved through the minor NSR programs or other mechanisms would major NSR apply.

V. Ethylene Production

A. Summary of Environmental, Energy, Cost, and Economic Impacts

Environmental, energy, cost, and economic impacts were estimated for the proposed ethylene production NESHAP. No changes have been made to the provisions for process vents, storage vessels, transfer operations, or equipment leaks that would affect these estimates. The changes that were made

to the waste and heat exchange system requirements did not materially change the estimated impacts. The changes generally refined the NESHAP provisions and made them consistent with the basis of the original estimates; therefore, the impacts estimates have not been revised.

Specifically, the original estimates of impacts associated with heat exchange system requirements were estimated to be minimal because the proposed NESHAP would have required monthly monitoring which is already being performed by most facilities. As pointed out by several comments, most facilities are not testing at the inlet and outlet of each heat exchanger, as required in the proposed NESHAP, and such a requirement would result in increased compliance costs. However, this requirement has been removed from the NESHAP, making the requirements consistent with the basis of the original impacts assessment.

Although the requirements for waste have been significantly revised, they remain consistent with the basis for the original impacts assessment. The original assessment was based on the assumption that facilities with a total annual benzene (TAB) quantity less than 10 Mg/yr would have to add equipment to manage and treat waste streams. The revised waste requirements maintain this requirement. For facilities with a TAB quantity greater than 10 Mg/yr, the majority of comments regarding the impacts estimated for waste concerned the fact that costs were not included for facilities that will have to add equipment to manage and treat streams that were previously uncontrolled due to a compliance option. The revised NESHAP allow facilities to use the compliance options; therefore, it is not necessary to revise the impacts assessment.

The estimates of environmental, energy, cost, and economic impacts, which have not been revised, are presented in detail in the preamble for the proposed ethylene production NESHAP (65 FR 76433, December 6, 2000). In summary, it is estimated that the NESHAP will decrease HAP emissions by 60 percent or 992 Mg/yr (1,090 tpy) and VOC emissions by 64 percent or 9,271 Mg/yr (10,188 tpy). The annual cost (including amortized capital costs, operating and maintenance costs, and recovery credits) is estimated to range from $7,600 per year for facilities already managing and treating their waste according to the Benzene Waste Operations NESHAP to $1.3 million per year for facilities with a TAB quantity less than 10 Mg/yr that are not currently subject to the Benzene Waste Operations NESHAP requirements to manage and treat waste streams. No adverse economic impact is expected and no significant adverse non-air health, environmental, or energy impacts are expected to result from compliance with the ethylene production NESHAP.

B. Summary of Major Comments and Changes Since Proposal

Comments on the proposed NESHAP were received from ten different entities. A comprehensive summary of public comments can be found in the document entitled ''National Emission Standards for Hazardous Air Pollutants—Ethylene Production, Background Information Document for Final Standards, Summary of Public Comments and Responses'' (the ethylene production NESHAP BID). The BID contains summaries of all of the comments received with corresponding responses that describe all of the changes that have been made to the NESHAP.

The most significant comments concerned three emission types: waste, heat exchange systems, and equipment leaks. These comments also resulted in the most significant changes to the proposed NESHAP. The following sections summarize the comments received and changes that have been made regarding waste, heat exchange systems, and equipment leaks.

1. Waste Operations

Several commenters disagreed with the determination of MACT for waste for a variety of reasons. Generally, commenters argued that the MACT floor should be based on the Benzene Waste Operations NESHAP. As such, commenters viewed our proposed requirements as more stringent than the MACT floor, which they stated are not justified. Commenters mainly disagreed with the fact that the proposed waste requirements did not include the 1, 2, and 6 Mg/yr compliance options, the 10 Mg/yr TAB quantity applicability cut-off, and applicability and treatment requirements based on benzene. We considered each of the specific issues and came to the conclusions discussed in the following sections.

Compliance options. At proposal, we determined that the standard requirements of the Benzene Waste Operations NESHAP represented the MACT floor for both new and existing ethylene sources. The standard Benzene Waste Operations NESHAP requirements state that facilities with 10 Mg/yr or greater TAB quantity must control waste streams that have flow rates of at least 0.02 liters per minute (lpm), wastewater quantities of at least 10 Mg/yr, and benzene concentrations of at least 10 parts per million by weight (ppmw). In addition to the standard control requirements, the Benzene Waste Operations NESHAP includes three compliance options that allow a facility to chose which streams to manage and treat as long as certain conditions are met: either the TAB quantity for the untreated waste streams cannot exceed 2 Mg/yr, the facility TAB quantity for treated and untreated process wastewater streams is less than 1 Mg/yr, or the facility TAB quantity for all waste streams with at least 10 percent water content is less than 6 Mg/yr. These options are referred to as the 1, 2, and 6 Mg/yr compliance options. The waste or wastewater streams that can be exempted from management and treatment vary with the different compliance options. Details of these compliance options are specified in 40 CFR 61.342(c), (d), and (e) of the Benzene Waste Operations NESHAP.

Commenters disagreed with the fact that the compliance options were not included in the waste requirements for the proposed Ethylene Production NESHAP. Generally, the commenters argued that the compliance options have been found to be equivalent to the standard requirements of the Benzene Waste Operations NESHAP, through development of the Benzene Waste Operations NESHAP and the waste standards for the Petroleum Refineries NESHAP and, therefore, should be included. The commenters also noted that three of the five best performing facilities are using a compliance option.

Since proposal of the Ethylene Production NESHAP, we have obtained information on which facilities are using compliance options and what streams they are controlling. Our general finding is that, regardless of how a facility is complying with the Benzene Waste Operations NESHAP, facilities typically control continuous streams, and facilities tend not to control intermittent streams. Examples of streams that are typically not controlled are samples and maintenance waste (both during normal operations and turn-arounds). The fact that the same types of streams are typically being controlled, regardless of whether a facility is complying with the standard requirements or a compliance option, supports the finding that the 1, 2 and 6 Mg/yr compliance options are equivalent to the standard Benzene Waste Operations NESHAP requirements (and to each other) in the level of control achieved at ethylene production facilities. Therefore, we have determined that it is appropriate to include the 1, 2, and 6 Mg/yr

compliance options in the Ethylene Production NESHAP.

10 Mg/yr applicability cut-off. Under the proposed NESHAP, all ethylene production facilities that are major sources of HAP emissions, including those with a TAB quantity less than 10 Mg/yr, would have been required to comply with the waste management and treatment requirements. Facilities with a TAB quantity less than 10 Mg/yr are not currently required to comply with the management and treatment requirements of the Benzene Waste Operations NESHAP. Commenters argued that because the Benzene Waste Operations NESHAP represents the floor, the 10 Mg/yr applicability cut-off should be included in the Ethylene Production NESHAP. Commenters cited the Petroleum Refineries NESHAP as a precedent, noting that the Benzene Waste Operations NESHAP was determined to represent the MACT floor for waste control at petroleum refineries and the Petroleum Refineries NESHAP does not require control of waste at sources with a TAB quantity less than 10 Mg/yr.

Review of the practices in use at the five best performing ethylene production facilities (representing 12 percent of the industry) shows that four of the five are subject to and, therefore, are assumed to be complying with the management and treatment requirements of the Benzene Waste Operations NESHAP. Only one of the best performing facilities is not required to comply with the management and treatment requirements of the Benzene Waste Operations NESHAP because the TAB quantity for the facility is less than 10 Mg/yr. Exempting facilities with a TAB quantity less than 10 Mg/yr from management and treatment requirements would not reflect the level of control achieved by the average of the five best-performing facilities.

We have determined that the MACT floor for waste includes the management and treatment of waste streams from ethylene production, regardless of a facility's TAB quantity. However, using the Benzene Waste Operations NESHAP stream applicability requirements to determine which streams must be controlled at facilities with a TAB quantity less than 10 Mg/yr may not be appropriate. The 1, 2, and 6 Mg/yr compliance options are not appropriate because their use at a facility with a TAB quantity less than 10 Mg/yr could result in no waste streams being controlled. For example, the 6 Mg/yr option allows a facility to choose which streams to manage and treat as long as the TAB quantity for all streams is less than 6 Mg/yr. If the TAB quantity for the facility is already 6 Mg/yr or less, no streams would have to be managed and treated, which is not consistent with the MACT floor level of control. Requiring facilities to comply with the standard requirements of the Benzene Waste Operations NESHAP would also not be appropriate because it may require the facilities to treat intermittent streams which are generally not controlled by the best-performing facilities that form the basis of the MACT floor determination.

We have determined that the most appropriate way to require facilities with a TAB quantity less than 10 Mg/yr to achieve the level of control achieved by the best-performing facilities is to specify the streams that must be controlled. Data received since proposal indicate that the best performing ethylene facilities control two types of streams as part of their Benzene Waste Operations NESHAP compliance strategy: (1) Spent caustic streams (wastes from the caustic washing process to remove sulfur compounds and other contaminants from the process stream), and (2) dilution steam blowdown streams (condensed steam used to quench the cracked gas condensates). We have determined that it is appropriate to apply the flow rate and concentration control applicability cut-offs in the standard requirements of the Benzene Waste Operations NESHAP to these streams. The best-performing facilities are generally not controlling intermittent streams.

Based on this information, the Ethylene Production NESHAP have been revised to require that facilities with a TAB quantity less than 10 Mg/yr manage and treat, according to the requirements of the Benzene Waste Operations NESHAP, each spent caustic and dilution steam blowdown waste stream with a benzene concentration greater than or equal to 10 ppmw, a flow rate greater than or equal to 0.02 lpm, and an annual wastewater quantity greater than or equal to 10 Mg/yr. The control requirements for these streams apply at all times except during periods of startup, shutdown, and malfunction (SSM), if the SSM precludes the ability to comply and the facility follows the provisions of their SSM plan.

Benzene as a surrogate. One modification made to the Benzene Waste Operations NESHAP requirements for the proposed Ethylene Production NESHAP waste requirements was to base the requirements on total HAP rather than benzene. For example, in the standard requirements of the Benzene Waste Operations NESHAP, a stream containing less than 10 ppmw of benzene is not required to be managed and treated. Under the proposed Ethylene Production NESHAP, streams containing less than 10 ppmw total HAP would not have been required to be managed and treated. Similarly, the Benzene Waste Operations NESHAP require streams to be treated to reduce benzene to 10 ppmw or by 99 percent while the proposed Ethylene Production NESHAP would have required streams to be treated to reduce total HAP to 10 ppmw or by 99 percent.

Several commenters disagreed with EPA's decision to base applicability and treatment requirements on total HAP rather than benzene. Commenters argued that because they are currently treating wastes based on benzene concentration, the requirement to treat wastes based on total HAP concentration is an above-the-floor option. The commenters stated that existing treatment systems are not likely to be capable of treating to the more stringent standards based on total HAP. Commenters stated that although the additional costs would be significant, the additional emission reductions would be minimal because benzene is generally an appropriate surrogate for HAP, and little additional emission reduction would be achieved.

Our original intent in proposing stream applicability and treatment requirements on total HAP content rather than benzene content was to ensure that streams containing HAP other than benzene are treated and controlled. We maintain that because compliance with the Benzene Waste Operations NESHAP represents the MACT floor and results in control of HAP other than benzene, the MACT floor includes control of HAP other than benzene. However, we have determined that it is not necessary to base stream applicability and treatment requirements on total HAP to ensure that all HAP are managed and treated. Information obtained through survey responses and comments shows that, with few exceptions, all of the waste streams from ethylene production units that contain HAP contain benzene. According to commenters (Docket A–98–22), of all the waste streams generated by 33 ethylene manufacturing production units, only two do not contain benzene but contain other HAP. One stream is generated from a reflux drum on a debutanizer column. The stream contains 1,3-butadiene and has a flow rate of 2 gallons per minute. The other stream is an intermittent stream that is generated during turnarounds that contains naphthalene. Applying the finding that the best-performing

facilities generally control continuous streams but not intermittent streams, either due to flow rate and concentration cut-offs or use of a compliance option, we have determined that controlling the continuous 1,3-butadiene stream, but not the naphthalene turnaround stream, is consistent with the MACT floor. To ensure that continuous streams that contain HAP other than benzene are controlled, while at the same time minimizing the burden of identifying these streams, we are specifically requiring management and treatment of waste streams that contain greater than or equal to 10 ppmw of 1,3-butadiene. To ensure that this requirement does not result in the control of intermittent streams that are generally not controlled, the flow rate applicability cutoffs for benzene-containing streams (0.02 lpm or 10 Mg/yr wastewater quantity) also applies to the butadiene streams.

We have determined that it is not necessary to express the treatment requirements in terms of total HAP. We agree with commenters that treatment and control devices used to remove or destroy benzene will remove and destroy the other HAP regulated by this rule to approximately the same level. Benzene can be used as a surrogate to determine treatment and control efficiencies. If no benzene is present in a regulated stream, another HAP (such as 1,3-butadiene) must be used to show that treatment and control efficiencies required for benzene are achieved for that HAP. In such cases, compliance can also be demonstrated by routing the stream to a control device that is being used to comply with the Benzene Waste Operations NESHAP.

Off-site waste treatment. Some facilities send their regulated wastes off-site for treatment by another entity. The proposed rule specified that wastes must not be transferred unless the transferee has submitted to EPA a certification that they will manage and treat the waste in accordance with the rule and that they accept the responsibility for compliance. Several commenters stated that the certification requirements should be deleted.

The final rule retains the certification requirements. The discharger has the ultimate responsibility for assuring that waste transferred to another party for off-site treatment is treated in conformity with the applicable standard. The transferee is acting as the agent of the discharger when it accepts responsibility for treating the waste. The provisions in the proposal requiring certification by the transferee are less onerous for the discharger than the only practicable alternative, which would require that the discharger actively supervise the activities of the offsite treatment facility. The certification provisions are similar to the requirements of 40 CFR part 63, subpart G (the Hazardous Organic NESHAP), and will pose no unreasonable burden on the generators or receivers of the waste.

2. Heat Exchange Systems

Sampling location. The proposed Ethylene Production NESHAP included requirements to sample cooling water at the inlet and outlet of each heat exchanger for the presence of compounds that indicate a leak. Sampling at each heat exchanger was required to address the fact that cooling water circulation rates through ethylene production units tend to be relatively high. Obtaining only one inlet and outlet sample for the entire system (for example, at the cooling tower) could result in a leak not being detected because the concentration of the leaked compound could be lower that the detection limit of the testing method used.

Several commenters argued that the requirement does not reflect the floor level of control, stating that none of the best-performing facilities are required to test at the inlet and outlet of every heat exchanger. These commenters argued that such a requirement would be an above-the-floor option that is not cost effective. Several commenters provided estimates of the additional costs associated with sampling and testing at each heat exchanger. The estimated annualized costs provided by the commenters ranged from $60,000 to $1.2 million per year for a single ethylene production unit.

One commenter suggested an approach for addressing the circulation rate issue. The commenter based the suggestion on the assumptions that: (1) The requirements of the Hazardous Organic NESHAP result in an adequate level of leak detection, and (2) the circulation rate of cooling water through an ethylene production unit is eight times the circulation rate through a Hazardous Organic NESHAP unit. Using these assumptions, the 1 ppmw leak definition of the Hazardous Organic NESHAP and the average of circulation rates reported for ethylene units in survey responses, the commenter estimated that a 6.35 pound per hour (lb/hr) leak rate would be detected at a Hazardous Organic NESHAP unit. The commenter suggested allowing facilities to decide where to test for leaks with the condition that a leak of this magnitude would be detected. The commenter stated that such a requirement would ensure a level of performance comparable to the Hazardous Organic NESHAP and would provide facilities flexibility to tailor a monitoring program to their unique circumstances. The commenter explained that one facility may choose to sample the combined cooling water flow from many heat exchangers using a test method with a relatively low detection limit, while another may sample the flow from fewer exchangers using a higher detection limit.

Based on information provided by commenters, we agree that requiring testing at the inlet and outlet of each heat exchanger does not represent the floor level of control. We find that the suggestion to allow facilities to develop a site-specific sampling plan based on performance comparable to the Hazardous Organic NESHAP would represent the floor. We have reviewed and agree with the commenter's suggested approach for establishing the floor level sampling plan based on a specified leak detection limit, with one exception. We adjusted the calculation to correct an error in calculating the average circulation rate, which resulted in a leak rate that must be detected of 6.75 lb/hr. Going beyond the floor to the proposed testing requirement would impose costs that are unreasonable given the small emissions reductions that would be achieved. The final rule allows the use of any sampling location plan that is sufficiently sensitive to detect a leak rate of 6.75 lb/hr.

Monitoring frequency. Commenters expressed concern that the proposed rule did not allow reduced heat exchanger monitoring frequency for sustained good performance, which is allowed in other LDAR programs. One of the commenters suggested that we adopt the Hazardous Organic NESHAP requirements for heat exchanges, which start with monthly monitoring and then allow quarterly monitoring. We agree with these comments in general. The floor for heat exchangers is an LDAR program with monthly monitoring. We recognize, however, that the emission performance of LDAR programs is variable and is influenced by a number of site-specific factors. We believe that providing an incentive in the final rule for reduced monitoring will encourage facilities to undertake measures to diagnose the causes of leaks and reduce the frequency of occurrence. Accordingly, the final rule includes a provision for reduced monitoring for units with sustained good performance in preventing leaks. This provision is generally consistent with the Hazardous Organic NESHAP, and we believe it is

equivalent to the floor and will provide an incentive for greater emissions reductions while minimizing monitoring burden.

The final rule requires monthly monitoring for the first 6 months. If no leaks are detected during this period, then the monitoring frequency changes to quarterly. If a leak is subsequently detected, then monthly monitoring is required until the leak is repaired. After the leak is repaired, then monthly monitoring is required for 6 months. If no leaks occur during this period, the monitoring frequency returns to quarterly.

Repair requirements. The proposed Ethylene Production NESHAP would have required a leak to be repaired within 15 days of being detected. Commenters stated that the best-performing facilities are not required to repair leaks within 15 days so this is an above-the-floor option. Commenters provided detailed comments on the steps and costs involved in repairing heat exchangers.

Our original intent in requiring repair in 15 days was to provide consistency with the repair requirements for other leaking components. Through the comments received in response to the proposed NESHAP, we have learned that repairing heat exchangers is different than repairing other types of leaking components. According to commenters, to repair a heat exchanger, it must be shut down, isolated from the process, cleaned, opened, tested to find the leak(s), and repaired. The commenters added that removing an exchanger from service often requires a unit to be shutdown. Commenters provided the contrasting example of a leaking valve, for which packing and flange bolts can often simply be tightened externally or, in extreme cases, can be externally pumped with a sealant or clamped to repair. Based on the information received in response to the proposed NESHAP, we agree that the 15-day repair period is more stringent than the floor and that the more stringent requirement is not reasonable because it does not allow adequate time for repair. We have determined that a 45-day repair period represents the floor. This is the repair period allowed by the Hazardous Organic NESHAP. In addition to extending the repair period to 45 days, we have revised the repair and delay of repair provisions to be consistent with the Hazardous Organic NESHAP.

3. Equipment Leaks

The proposed Ethylene Production NESHAP required connector monitoring. Commenters disagreed with the approach EPA used to determine the MACT floor, stating that HAP emissions from uncontrolled connectors are overestimated due to an inaccurate emission factor. One commenter (Docket A–98–22) provided an alternate emission factor based on data that they gathered from ethylene production units. According to the commenter, when their emission factor is used in the MACT floor analysis, it results in a different five best-performing facilities, of which only two perform connector monitoring. Commenters asserted that connector monitoring is, therefore, not part of the floor. In addition, one commenter explained that their study shows that there is no statistically significant difference between the average emission rates for connectors being monitored for the first time and those that are monitored as part of a continuing monitoring program. Commenters also provided cost data to show that some facilities will incur high costs to monitor connectors with no statistically measurable emissions benefit.

Due to uncertainties regarding connector emission factors used in the original MACT floor analysis, we performed an analysis using an emission factor provided by a commenter; however, this does not mean that we have accepted the commenter's emissions factor as a more accurate estimator of connector emissions (Docket A–98–22). The objective of the analyses was to determine the impact using different connector emission factors would have on which facilities are determined to be the five best-performing sources. Although this analysis resulted in a slightly different five best-performing sources, the floor was the same, since three of the five facilities are monitoring connectors. Through this analysis, we have concluded that, regardless of the emission factor used, the majority of the best-performing facilities are performing connector monitoring.

We also conducted a study of the existing permits at certain facilities that had adopted permit conditions requiring 100 percent connector monitoring annually in exchange for emissions credits to be used for operational flexibility. In setting the MACT floor we found our knowledge of existing permit conditions compelling in terms of emissions benefits and therefore relevant in establishing the MACT floor. Certainly any monitoring worthy of conducting for the purpose of obtaining emissions credits was beneficial beyond cost.

Based on these analyses, we conclude that connector monitoring is part of the MACT floor. We do not believe that the available data support the commenters' conclusion that connector monitoring should not be included in the MACT floor. However, in consideration of the data submitted by the industry, we elected to require compliance with 40 CFR part 63, subpart UU, National Emission Standards for Equipment Leaks, which requires connector monitoring, but also allows for reduced monitoring frequency for good performance instead of annual monitoring. This provides the opportunity to reduce monitoring costs in cases where a low proportion of connectors are leaking. In offering a performance-based requirement for connector monitoring, we also have provided some consistency in approach with the heat exchanger and other equipment monitoring provisions.

VI. Spandex Production

A. Summary of Environmental, Energy, Cost, and Economic Impacts

1. What Are the Air Quality Impacts?

There are no additional emissions reductions achieved by the final NESHAP. The level of control required by the final NESHAP is already in place at the two affected reaction spinning facilities.

2. What Are the Cost Impacts?

The total estimated annual compliance cost of the final NESHAP is $78,040. This estimate includes annualized capital costs for monitoring equipment purchased. Annual costs also include monitoring, recordkeeping, and reporting costs. Costs were not included for control equipment since this is already in place at the two reaction spinning process facilities.

The capital costs are estimated to be $32,820 (in 1998 dollars). The capital costs are for purchase of thermocouples and liquid flow transducers for CPMS equipment and closed vent systems leak detection monitors. These costs are more than likely an overestimate because the two affected facilities already have monitors on their carbon adsorbers.

3. What Are the Economic Impacts?

The goal of the economic impact analysis is to estimate the market response of the spandex production facilities to the final NESHAP and to determine the economic effects that may result from the final NESHAP. The Spandex Production source category contains five facilities, but only the two facilities that use the reaction spinning process are affected by the final

NESHAP. These potentially affected facilities are owned by one company.

Spandex fiber production leads to potential HAP emissions from fiber spinning lines, storage tanks, and process vents; however, the emission sources are well controlled by the affected spandex manufacturing facilities. The mandated levels of control are met at these sources; therefore, no costs for additional add-on air pollution control equipment are expected to be incurred by the spandex facilities to comply with the final NESHAP. Instead, the compliance costs for the final NESHAP relate primarily to monitoring, reporting, and recordkeeping activities. The estimated total annualized cost for the final NESHAP is $78,040, which represents less than 0.01 percent of the revenues of the companies that own the spandex manufacturing facilities. The final NESHAP are, therefore, expected to have a negligible impact on the Spandex Production source category.

The economic impacts at the facility and company levels are measured by comparing the annualized compliance cost for each entity to its revenues. A cost-to-sales ratio is first calculated and then is multiplied by 100 to convert the ratio into percentages. For the final NESHAP, a cost-to-sales ratio exceeding 1 percent is determined to be an initial indicator of the potential for a significant facility impact. Revenues at the facility level are not available, therefore estimated facility revenues received from the sale of spandex fiber are used. Both affected facilities are expected to incur positive compliance costs. The ratio of costs to estimated revenues range from a low of 0.22 percent to a high of 0.35 percent. Thus, on average, the economic impact of the final NESHAP is minimal for the facilities producing spandex fibers.

The share of compliance costs to company sales are calculated to determine company level impacts. One company owns the two affected facilities, so only one firm faces positive compliance costs from the final NESHAP. The ratio of costs to company revenues is 0.10 percent. At the company level, the final NESHAP are not anticipated to have a significant economic impact on companies that own and operate the spandex fiber facilities. For more information, consult the economic impact analysis report entitled, Economic Impact Analysis: Spandex Production, which is in the docket for the spandex source category.

4. What Are the Non-Air Health, Environmental and Energy Impacts?

We believe that there would not be significant adverse environmental or energy impacts associated with the final NESHAP. The industry's baseline level of control is high, and the level of control required by the final NESHAP is currently being achieved for the emission point types. Environmental impacts from the application of the control or recovery devices proposed for the Spandex Production source category are also expected to be minimal for secondary air pollutants. In general, we determine impacts relative to the baseline that is set at the level of control in absence of the final NESHAP.

There is no incremental increase in emissions related to water pollution or solid waste as a result of the final NESHAP.

B. Summary of Major Comments and Changes Since Proposal

Comments on the proposed Spandex Production NESHAP were received from two different entities: the Institute of Clean Air Companies (ICAC) and Dupont. A summary and response to the general comments submitted can be found in Docket A–98–25.

Dupont's comments expressed concern that because the dry spinning spandex production process was not mentioned in the proposal, this could be interpreted as no standard for this source category and, as a result, these facilities would be subject to a case-by-case MACT determination. The discussion of this comment can be found in direct final amendments that are being published separately in this issue of the **Federal Register**.

VII. Administrative Requirements

A. Executive Order 12866: Regulatory Planning and Review

Under Executive Order 12866 (58 FR 51735, October 4, 1993), we must determine whether a final regulatory action is ''significant'' and therefore subject to Office of Management and Budget (OMB) review and the requirements of the Executive Order. The order defines ''significant regulatory action'' as one that is likely to result in a rule that may:

(1) Have an annual effect on the economy of $100 million or more, or adversely affect in a material way the economy, a sector of the economy, productivity, competition, jobs, the environment, public health or safety, or State, local, or tribal governments or communities;

(2) Create a serious inconsistency or otherwise interfere with an action taken or planned by another agency;

(3) Materially alter the budgetary impact of entitlements, grants, user fees, or loan programs or the rights and obligations of recipients thereof; or

(4) Raise novel legal or policy issues arising out of legal mandates, the President's priorities, or the principles set forth in the Executive Order.

Pursuant to the terms of Executive Order 12866, it has been determined that today's final rule is not a ''significant regulatory action'' because it will not have an annual effect on the economy of $100 million or more and is therefore not subject to OMB review.

B. Executive Order 13132, Federalism

Executive Order 13132, entitled ''Federalism'' (64 FR 43255, August 10, 1999), requires EPA to develop an accountable process to ensure ''meaningful and timely input by State and local officials in the development of regulatory policies that have federalism implications.'' ''Policies that have federalism implications'' is defined in the Executive Order to include regulations that have ''substantial direct effects on the States, on the relationship between the national government and the States, or on the distribution of power and responsibilities among the various levels of government.'' Under Executive Order 13132, EPA may not issue a regulation that has federalism implications, that imposes substantial direct compliance costs, and that is not required by statute, unless the Federal government provides the funds necessary to pay the direct compliance costs incurred by State and local governments, or EPA consults with State and local officials early in the process of developing the rule. The EPA also may not issue a regulation that has federalism implications and that preempts State law unless the Agency consults with State and local officials early in the process of developing the rule.

If EPA complies by consulting, Executive Order 13132 requires EPA to provide to the OMB, in a separately identified section of the preamble to the rule, a federalism summary impact statement (FSIS). The FSIS must include a description of the extent of EPA's prior consultation with State and local officials, a summary of the nature of their concerns and EPA's position supporting the need to issue the regulation, and a statement of the extent to which the concerns of State and local officials have been met. Also, when EPA transmits a final rule with federalism implications to OMB for review

pursuant to Executive Order 12866, EPA must include a certification from its federalism official stating that EPA has met the requirements of Executive Order 13132 in a meaningful and timely manner.

Today's final rule will not have substantial direct effects on the States, on the relationship between the national government and the States, or on the distribution of power and responsibilities among the various levels of government, as specified in Executive Order 13132. No facilities subject to the final rule are owned by State or local governments. Therefore, State and local governments will not have any direct compliance costs resulting from the final rule. Furthermore, EPA is directed to develop the final rule by section 112 of the CAA. Thus, the requirements of section 6 of the Executive Order do not apply to the final rule.

C. Executive Order 13175, Consultation and Coordination With Indian Tribal Governments

Executive Order 13175, entitled ''Consultation and Coordination with Indian Tribal Governments'' (65 FR 67249, November 6, 2000), requires EPA to develop an accountable process to ensure ''meaningful and timely input by tribal officials in the development of regulatory policies that have tribal implications.'' ''Policies that have tribal implications'' is defined in the Executive Order to include regulations that have ''substantial direct effects on one or more Indian tribes, on the relationship between the Federal government and the Indian tribes, or on the distribution of power and responsibilities between the Federal government and Indian tribes.''

The final rule does not have tribal implications. It will not have substantial direct effects on tribal governments, on the relationship between the Federal government and Indian tribes, or on the distribution of power and responsibilities between the Federal government and Indian tribes, as specified in Executive Order 13175. Thus, Executive Order 13175 does not apply to the final rule.

D. Executive Order 13045, Protection of Children From Environmental Health Risks and Safety Risks

Executive Order 13045, ''Protection of Children from Environmental Health Risks and Safety Risks'' (62 FR 19885, April 23, 1997) applies to any rule that: (1) Is determined to be ''economically significant'' as defined under Executive Order 12866, and (2) concerns an environmental health or safety risk that EPA has reason to believe may have a disproportionate effect on children. If the regulatory action meets both criteria, EPA must evaluate the environmental health or safety effects of the planned rule on children, and explain why the planned regulation is preferable to other potentially effective and reasonably feasible alternatives considered by EPA.

The EPA interprets Executive Order 13045 as applying only to those regulatory actions that are based on health or safety risks, such that the analysis required under section 5–501 of the Executive Order has the potential to influence the regulation. Today's final rule is not subject to Executive Order 13045 because it establishes an environmental standard based on technology, not health or safety risk. No children's risk analysis was performed because no alternative technologies exist that would provide greater stringency at a reasonable cost. Furthermore, today's final rule has been determined not to be ''economically significant'' as defined under Executive Order 12866.

E. Unfunded Mandates Reform Act of 1995

Title II of the Unfunded Mandates Reform Act of 1995 (UMRA), Public Law 104–4, establishes requirements for Federal agencies to assess the effects of their regulatory actions on State, local, and tribal governments and the private sector. Under section 202 of the UMRA, EPA must generally prepare a written statement, including a cost-benefit analysis, for proposed and final rules with ''Federal mandates'' that may result in expenditures to State, local, and tribal governments, in the aggregate, or to the private sector, of $100 million or more in any 1 year. Before promulgating an EPA rule for which a written statement is needed, section 205 of the UMRA generally requires EPA to identify and consider a reasonable number of regulatory alternatives and adopt the least-costly, most cost-effective, or least-burdensome alternative that achieves the objectives of the rule. The provisions of section 205 do not apply when they are inconsistent with applicable law. Moreover, section 205 allows EPA to adopt an alternative other than the least-costly, most cost-effective, or least-burdensome alternative if the Administrator publishes with the final rule an explanation why that alternative was not adopted. Before EPA establishes any regulatory requirements that may significantly or uniquely affect small governments, including tribal governments, we must have developed under section 203 of the UMRA a small government agency plan. The plan must provide for notifying potentially affected small governments, enabling officials of affected small governments to have meaningful and timely input in the development of EPA regulatory proposals with significant Federal intergovernmental mandates, and informing, educating, and advising small governments on compliance with the regulatory requirements.

The EPA has determined that the final rule does not contain a Federal mandate that may result in expenditures of $100 million or more by State, local, and tribal governments, in the aggregate, or the private sector in any 1 year. The total cost to the private sector is approximately $22.2 million per year. The final rule contains no mandates affecting State, local, or Tribal governments. Thus, today's final rule is not subject to the requirements of sections 202 and 205 of the UMRA.

We have determined that the final rule contains no regulatory requirements that might significantly or uniquely affect small governments because it contains no requirements that apply to such governments or impose obligations upon them.

F. Regulatory Flexibility Act (RFA) as Amended by the Small Business Regulatory Enforcement Fairness Act of 1996 (SBREFA), 5 U.S.C. 601, et seq.

The RFA generally requires us to give special consideration to the effect of Federal regulations on small entities and to consider regulatory options that might mitigate any such impacts. We must prepare a regulatory flexibility analysis unless we determine that the rule will not have a ''significant economic impact on a substantial number of small entities.'' Small entities include small businesses, small organizations, and small governmental jurisdictions.

For the purposes of assessing the impacts of today's final rule on small entities, a small entity is defined differently for the four source categories for which we are proposing standards. Based on those definitions, there are no small entities affected by the final rule. Pursuant to the provisions of 5 U.S.C. 605(b), we have determined that the final rule will not have a significant economic impact on a substantial number of small entities.

G. Paperwork Reduction Act

The information collection requirements in today's final rule have been submitted for approval to the OMB under the Paperwork Reduction Act, 44 U.S.C. 3501 *et seq.* An ICR document has been prepared by EPA (ICR No.

1893.03) and a copy may be obtained from Susan Auby by mail at the U.S. EPA, Office of Environmental Information, Collection Strategies Division (2822T), 1200 Pennsylvania Avenue NW, Washington, DC 20460, by e-mail at *auby.susan@epa.gov,* or by calling (202) 566–1672. A copy may also be downloaded off the internet at *http://www.epa.gov/icr.* The information requirements are not effective until OMB approves them.

Information is required to ensure compliance with the final rule. If the relevant information were collected less frequently, EPA would not be reasonably assured that a source is in compliance with the rule. In addition, EPA's authority to take administrative action would be reduced significantly.

The final rule requires owners or operators of affected sources to retain records for a period of 5 years. The 5-year retention period is consistent with the General Provisions of 40 CFR part 63 and with the 5-year record retention requirement in the operating permit program under title V of the CAA.

The recordkeeping and reporting requirements of the final rule are specifically authorized by section 114 of the CAA (42 U.S.C. 7414). All information submitted to us for which a claim of confidentiality is made will be safeguarded according to our policies in 40 CFR part 2, subpart B, ''Confidentiality of Business Information.''

The EPA expects the final rule to affect a total of 75 facilities over the first 3 years. The EPA assumes that no new facilities will become subject to the rule during each of the first 3 years. The EPA expects 75 existing facilities to be affected by the final rule, and these existing facilities will begin complying in the third year.

The estimated average annual burden for the first 3 years after promulgation of the rule for the industries and the implementing agency is outlined below. You can find the details of this information collection in the ''Standard Form 83 Supporting Statement for ICR No. 1893.03,'' in Docket No. A–97–17.

Affected entity	Total hours	Labor costs (10^3\$)	Capital costs (10^3\$)	Operating and Maintenance costs (10^3\$)	Total costs (10^3\$)
Industry	33,926	1,510	4,901	16	6,427
Implementing agency	3,465	117	0	0	117

Burden means the total time, effort, or financial resources expended by persons to generate, maintain, retain, or disclose or provide information to or for a Federal agency. This includes the time needed to review instructions; develop, acquire, install, and utilize technology and systems for the purposes of collecting, validating, and verifying information, processing and maintaining information, and disclosing and providing information; adjust the existing ways to comply with any previously applicable instructions and requirements; train personnel to be able to respond to a collection of information; search data sources; complete and review the collection of information; and transmit or otherwise disclose the information.

An agency may not conduct or sponsor, and a person is not required to respond to, a collection of information unless it displays a currently valid OMB control number. Control numbers for EPA's regulations are listed in 40 CFR part 9 and 48 CFR chapter 15.

H. National Technology Transfer and Advancement Act

Section 12(d) of the National Technology Transfer and Advancement Act (NTTAA) of 1995 (Public Law No. 104–113) (15 U.S.C. 272 note) directs EPA to use voluntary consensus standards in their regulatory and procurement activities unless to do so would be inconsistent with applicable law or otherwise impractical. Voluntary consensus standards are technical standards (e.g., materials specifications, test methods, sampling procedures, business practices) developed or adopted by one or more voluntary consensus bodies. The NTTAA directs EPA to provide Congress, through annual reports to OMB, with explanations when an agency does not use available and applicable voluntary consensus standards.

The final rule involves technical standards. The EPA cites the following methods in the final rule: EPA Methods 1, 1A, 2, 2A, 2C, 2D, 2F, 2G, 3B, 4, 18, 25, 25A, 27, 316, and 320. Consistent with the NTTAA, EPA conducted searches to identify voluntary consensus standards in addition to these EPA methods. No applicable voluntary consensus standards were identified for EPA Methods 1A, 2A, 2D, 2F, 2G, 27, and 316. Three voluntary consensus standards were identified as acceptable alternatives to EPA test methods and procedures and are cited in the final rule.

The voluntary consensus standard, American Society of Mechanical Engineers (ASME) PTC 19–10–1981—Part 10, Flue and Exhaust Gas Analyses, is cited in the final rule for its manual method for measuring the oxygen content of exhaust gas. Part 10 of ASME PTC 19–10–1981 is an acceptable alternative to Method 3B.

The voluntary consensus standard, American Society for Testing and Materials (ASTM) D6420–99, Standard Test Method for Determination of Gaseous Organic Compounds by Direct Interface Gas Chromatography-Mass Spectrometry (GC/MS), is appropriate in the cases described below for inclusion in the rule in addition to EPA Methods. Similar to EPA's performance-based Method 18, ASTM D6420–99 is also a performance-based method for measurement of gaseous organic compounds. However, ASTM D6420–99 was written to support the specific use of highly portable and automated GC/MS. While offering advantages over the traditional Method 18, the ASTM method does allow some less stringent criteria for accepting GC/MS results than required by Method 18. Therefore, ASTM D6420–99 is a suitable alternative to Method 18 where: (1) The target compounds are those listed in Section 1.1 of ASTM D6420–99, and (2) the target concentration is between 150 parts per billion by volume and 100 ppmv.

For target compounds not listed in Table 1.1 of ASTM D6420–99, but potentially detected by mass spectrometry, the regulation specifies that the additional system continuing calibration check after each run, as detailed in Section 10.5.3 of the ASTM method, must be followed, met, documented, and submitted with the data report even if there is no moisture condenser used or the compound is not considered water soluble. For target compounds not listed in Table 1.1 of ASTM D6420–99 and not amenable to detection by mass spectrometry, ASTM D6420–99 does not apply.

The voluntary consensus standard, ASTM D1946–90 (2000), Standard Practice for Analysis of Reformed Gas by Gas Chromatography, is an acceptable method for measuring process vent emissions of carbon monoxide and hydrogen for the purposes of the final rule.

The search and review results have been documented and are placed in the Generic MACT docket (Docket No. A–97–17).

I. Congressional Review Act

The Congressional Review Act, 5 U.S.C. 801 *et seq.*, as added by the SBREFA, generally provides that before a rule may take effect, the agency promulgating the rule must submit a rule report, which includes a copy of the rule, to each House of the Congress and to the Comptroller General of the United States. The EPA will submit a report containing this final rule and other required information to the U.S. Senate, the U.S. House of Representatives, and the Comptroller General of the United States, prior to publication of the final rule in the **Federal Register**. A major rule cannot take effect until 60 days after it is published in the **Federal Register**. This action is not a ''major rule'' as defined by 5 U.S.C. 804(2) and, therefore, will be effective on July 12, 2002.

J. Executive Order 13211, Actions Concerning Regulations That Significantly Affect Energy Supply, Distribution, or Use

This rule is not subject to Executive Order 13211, ''Actions Concerning Regulations That Significantly Affect Energy Supply, Distribution, or Use'' (66 FR 28355, May 22, 2001) because it is not a significant regulatory action under Executive Order 12866.

List of Subjects in 40 CFR Part 63

Environmental protection, Administrative practice and procedure, Air pollution control, Hazardous substances, Intergovernmental relations, Reporting and recordkeeping requirements.

Dated: May 15, 2002.

Christine Todd Whitman,

Administrator.

For the reasons set out in the preamble, title 40, chapter I, part 63 of the Code of Federal Regulations is amended as follows:

PART 63—[AMENDED]

1. The authority citation for part 63 continues to read as follows:

Authority: 42 U.S.C. 7401 *et seq.*

2. Part 63 is amended by adding a new subpart XX to read as follows:

Subpart XX—National Emission Standards for Ethylene Manufacturing Process Units: Heat Exchange Systems and Waste Operations

Sec.

Introduction

63.1080 What is the purpose of this subpart?

63.1081 When must I comply with the requirements of this subpart?

Definitions

63.1082 What definitions do I need to know?

Applicability for Heat Exchange Systems

63.1083 Does this subpart apply to my heat exchange system?

63.1084 What heat exchange systems are exempt from the requirements of this subpart?

Heat Exchange System Requirements

63.1085 What are the general requirements for heat exchange systems?

Monitoring Requirements for Heat Exchange Systems

63.1086 How must I monitor for leaks to cooling water?

Repair Requirements for Heat Exchange Systems

63.1087 What actions must I take if a leak is detected?

63.1088 In what situations may I delay leak repair, and what actions must I take for delay of repair?

Recordkeeping and Reporting Requirements for Heat Exchange Systems

63.1089 What records must I keep?

63.1090 What reports must I submit?

Background for Waste Requirements

63.1091 What do the waste requirements do?

63.1092 What are the major differences between the requirements of 40 CFR part 61, subpart FF, and the waste requirements for ethylene production sources?

Applicability for Waste Requirements

63.1093 Does this subpart apply to my waste streams?

63.1094 What waste streams are exempt from the requirements of this subpart?

Waste Requirements

63.1095 What specific requirements must I comply with?

63.1096 What requirements must I comply with if I transfer waste off-site?

Implementation and Enforcement

63.1097 Who implements and enforces this subpart?

Tables to Subpart XX of Part 63

Table 1 to Subpart XX of Part 63—Hazardous Air Pollutants

Table 2 to Subpart XX of Part 63—Requirements of 40 CFR Part 61, Subpart FF, Not Included in the Requirements for This Subpart and Alternate Requirements

Introduction

§ 63.1080 What is the purpose of this subpart?

This subpart establishes requirements for controlling emissions of hazardous air pollutants (HAP) from heat exchange systems and waste streams at new and existing ethylene production units.

§ 63.1081 When must I comply with the requirements of this subpart?

You must comply with the requirements of this subpart according to the schedule specified in § 63.1102(a).

Definitions

§ 63.1082 What definitions do I need to know?

(a) Unless defined in paragraph (b) of this section, definitions for terms used in this subpart are provided in the Clean Air Act, § 63.1103(e), and 40 CFR 61.341.

(b) The following definitions apply to terms used in this subpart:

Continuous butadiene waste stream means the continuously flowing process wastewater from the following equipment: The aqueous drain from the debutanizer reflux drum, water separators on the C4 crude butadiene transfer piping, and the C4 butadiene storage equipment; and spent wash water from the C4 crude butadiene carbonyl wash system. The continuous butadiene waste stream does not include butadiene streams generated from sampling, maintenance activities, or shutdown purges. The continuous butadiene waste stream does not include butadiene streams from equipment that is currently an affected source subject to the control requirements of another NESHAP. The continuous butadiene waste stream contains less than 10 parts per million by weight (ppmw) of benzene.

Dilution steam blowdown waste stream means any continuously flowing process wastewater stream resulting from the quench and compression of cracked gas (the cracking furnace effluent) at an ethylene production unit and is discharged from the unit. This stream typically includes the aqueous or oily-water stream that results from condensation of dilution steam (in the cracking furnace quench system), blowdown from dilution steam generation systems, and aqueous streams separated from the process between the cracking furnace and the

cracked gas dehydrators. The dilution steam blowdown waste stream does not include dilution steam blowdown streams generated from sampling, maintenance activities, or shutdown purges. The dilution steam blowdown waste stream also does not include blowdown that has not contacted HAP-containing process materials.

Heat exchange system means any cooling tower system or once-through cooling water system (e.g., river or pond water). A heat exchange system can include more than one heat exchanger and can include an entire recirculating or once-through cooling system.

Process wastewater means water which comes in contact with benzene or butadiene during manufacturing or processing operations conducted within an ethylene production unit. Process wastewater is not organic wastes, process fluids, product tank drawdown, cooling water blowdown, steam trap condensate, or landfill leachate. Process wastewater includes direct-contact cooling water.

Spent caustic waste stream means the continuously flowing process wastewater stream that results from the use of a caustic wash system in an ethylene production unit. A caustic wash system is commonly used at ethylene production units to remove acid gases and sulfur compounds from process streams, typically cracked gas. The spent caustic waste stream does not include spent caustic streams generated from sampling, maintenance activities, or shutdown purges.

Applicability for Heat Exchange Systems

§ 63.1083 Does this subpart apply to my heat exchange system?

The provisions of this subpart apply to your heat exchange system if you own or operate an ethylene production unit expressly referenced to this subpart XX from subpart YY of this part. The provisions of subpart A (General Provisions) of this part do not apply to this subpart except as specified in subpart YY of this part.

§ 63.1084 What heat exchange systems are exempt from the requirements of this subpart?

Your heat exchange system is exempt from the requirements in §§ 63.1085 and 63.1086 if it meets any one of the criteria in paragraphs (a) through (e) of this section.

(a) Your heat exchange system operates with the minimum pressure on the cooling water side at least 35 kilopascals greater than the maximum pressure on the process side.

(b) Your heat exchange system contains an intervening cooling fluid, containing less than 5 percent by weight of total HAP listed in Table 1 to this subpart, between the process and the cooling water. This intervening fluid must serve to isolate the cooling water from the process fluid and must not be sent through a cooling tower or discharged. For purposes of this section, discharge does not include emptying for maintenance purposes.

(c) The once-through heat exchange system is subject to a National Pollution Discharge Elimination System (NPDES) permit with an allowable discharge limit of 1 part per million by volume (ppmv) or less above influent concentration, or 10 percent or less above influent concentration, whichever is greater.

(d) Your once-through heat exchange system is subject to a NPDES permit that meets all of the conditions in paragraphs (d)(1) through (4) of this section.

(1) The permit requires monitoring of a parameter or condition to detect a leak of process fluids to cooling water.

(2) The permit specifies the normal range of the parameter or condition.

(3) The permit requires monthly or more frequent monitoring for the parameters selected as leak indicators.

(4) The permit requires you to report and correct leaks to the cooling water when the parameter or condition exceeds the normal range.

(e) Your recirculating or once-through heat exchange system cools process fluids that contain less than 5 percent by weight of total HAP listed in Table 1 to this subpart.

Heat Exchange System Requirements

§ 63.1085 What are the general requirements for heat exchange systems?

Unless you meet one of the requirements for exemptions in § 63.1084, you must meet the requirements in paragraphs (a) through (d) of this section.

(a) Monitor the cooling water for the presence of substances that indicate a leak according to § 63.1086.

(b) If you detect a leak, repair it according to § 63.1087 unless repair is delayed according to § 63.1088.

(c) Keep the records specified in § 63.1089.

(d) Submit the reports specified in § 63.1090.

Monitoring Requirements for Heat Exchange Systems

§ 63.1086 How must I monitor for leaks to cooling water?

You must monitor for leaks to cooling water by monitoring each heat exchange system according to the requirements of paragraph (a) of this section, monitoring each heat exchanger according to the requirements of paragraph (b) of this section, or monitoring a surrogate parameter according to the requirements of paragraph (c) of this section. If you elect to comply with the requirements of paragraph (a) or (b) of this section, you may use alternatives in paragraph (d)(1) or (2) of this section for determining the mean entrance concentration.

(a) *Heat exchange system.* Monitor cooling water in each heat exchange system for the HAP listed in Table 1 to this subpart (either total or speciated) or other representative substances (e.g., total organic carbon or volatile organic compounds (VOC)) that indicate the presence of a leak according to the requirements in paragraphs (a)(1) through (5) of this section.

(1) You define the equipment that comprises each heat exchange system. For the purposes of implementing paragraph (a) of this section, a heat exchange system may consist of an entire heat exchange system or any combinations of heat exchangers such that, based on the rate of cooling water at the entrance and exit to each heat exchange system and the sensitivity of the test method being used, a leak of 3.06 kg/hr or greater of the HAP in Table 1 to this subpart would be detected. For example, if the test you decide to use has a sensitivity of 1 ppmv for total HAP, you must define the heat exchange system so that the cooling water flow rate is 51,031 liters per minute or less so that a leak of 3.06 kg/hr can be detected.

(2) Monitoring periods. For existing sources, monitor cooling water as specified in paragraph (a)(2)(i) of this section. Monitor heat exchange systems at new sources according to the specifications in paragraph (a)(2)(ii) of this section.

(i) Monitor monthly for 6 months, both initially and following completion of a leak repair. Then monitor as provided in either paragraph (a)(2)(i)(A) or (a)(2)(i)(B) of this section, as appropriate.

(A) If no leaks are detected by monitoring monthly for a 6-month period, monitor quarterly thereafter until a leak is detected.

(B) If a leak is detected, monitor monthly until the leak has been repaired. Upon completion of repair, monitor according to the specifications in paragraph (a)(2)(i) of this section.

(ii) Monitor the cooling water weekly for heat exchange systems at new sources.

(3) Determine the concentration of the monitored substance in the heat

exchange system cooling water using any method listed in 40 CFR part 136. Use the same method for both entrance and exit samples. You may validate 40 CFR part 136 methods for the HAP listed in Table 1 to this subpart according to the procedures in appendix D to this part. Alternative methods may be used upon approval by the Administrator.

(4) Take a minimum of three sets of samples at each entrance and exit.

(5) Calculate the average entrance and exit concentrations, correcting for the addition of make-up water and evaporative losses, if applicable. Using a one-sided statistical procedure at the 0.05 level of significance, if the exit mean concentration is at least 10 percent greater than the entrance mean, or a leak of 3.06 kg/hr or greater of the HAP (total or speciated) in Table 1 to this subpart or other representative substance into the cooling water is detected, you have detected a leak.

(b) *Individual heat exchangers.* Monitor the cooling water at the entrance and exit of each heat exchanger for the HAP in Table 1 to this subpart (either total or speciated) or other representative substances (e.g., total organic carbon or VOC) that indicate the presence of a leak in a heat exchanger according to the requirements in paragraphs (b)(1) through (4) of this section.

(1) Monitoring periods. For existing sources, monitor cooling water as specified in paragraph (b)(1)(i) of this section. Monitor each heat exchanger at new sources according to the specifications in paragraph (b)(1)(ii) of this section.

(i) Monitor monthly for 6 months, both initially and following completion of a leak repair. Then monitor as provided in paragraph (b)(1)(i)(A) or (b)(1)(i)(B) of this section, as appropriate.

(A) If no leaks are detected by monitoring monthly for a 6-month period, monitor quarterly thereafter until a leak is detected.

(B) If a leak is detected, monitor monthly until the leak has been repaired. Upon completion of repair, monitor according to the specifications in paragraph (b)(1)(i) of this section.

(ii) Monitor the cooling water weekly for heat exchangers at new sources.

(2) Determine the concentration of the monitored substance in the cooling water using any method listed in 40 CFR part 136, as long as the method is sensitive to concentrations as low as 10 ppmv. Use the same method for both entrance and exit samples. Validation of 40 CFR part 136 methods for the HAP listed in Table 1 to this subpart may be determined according to the provisions of appendix D to this part. Alternative methods may be used upon approval by the Administrator.

(3) Take a minimum of three sets of samples at each heat exchanger entrance and exit.

(4) Calculate the average entrance and exit concentrations, correcting for the addition of make-up water and evaporative losses, if applicable. Using a one-sided statistical procedure at the 0.05 level of significance, if the exit mean concentration is at least 1 ppmv or 10 percent greater than the entrance mean, whichever is greater, you have detected a leak.

(c) *Surrogate parameters.* You may elect to comply with the requirements of this section by monitoring using a surrogate indicator of leaks, provided that you comply with the requirements of paragraphs (c)(1) through (3) of this section. Surrogate indicators that could be used to develop an acceptable monitoring program are ion specific electrode monitoring, pH, conductivity, or other representative indicators.

(1) You shall prepare and implement a monitoring plan that documents the procedures that will be used to detect leaks of process fluids into cooling waters. The plan shall require monitoring of one or more process parameters or other conditions that indicate a leak. Monitoring that is already being conducted for other purposes may be used to satisfy the requirements of this section. The plan shall include the information specified in paragraphs (c)(1)(i) through (iv) of this section.

(i) A description of the parameter or condition to be monitored and an explanation of how the selected parameter or condition will reliably indicate the presence of a leak.

(ii) The parameter level(s) or condition(s) that shall constitute a leak. This shall be documented by data or calculations showing that the selected levels or conditions will reliably identify leaks. The monitoring must be sufficiently sensitive to determine the range of parameter levels or conditions when the system is not leaking. When the selected parameter level or condition is outside that range, you have detected a leak.

(iii) Monitoring periods. For existing sources, monitor cooling water as specified in paragraph (c)(1)(iii)(A) of this section. Monitor heat exchange systems at new sources according to the specifications in paragraph (c)(1)(iii)(B) of this section.

(A) Monitor monthly for 6 months, both initially and following completion of a leak repair. Then monitor as provided in paragraph (c)(1)(iii)(A)(*1*) or (c)(1)(iii)(A)(*2*) of this section, as appropriate.

(1) If no leaks are detected, monitor quarterly thereafter until a leak is detected.

(2) If a leak is detected, monitor monthly until the leak has been repaired. Upon completion of repair, monitor according to the specifications in paragraph (c)(1)(iii)(A) of this section.

(B) Monitor the cooling water weekly for heat exchange systems at new sources.

(iv) The records that will be maintained to document compliance with the requirements of this section.

(2) If a leak is identified by audio, visual, or olfactory inspection, a method listed in 40 CFR part 136, or any other means other than those described in the monitoring plan, and the method(s) specified in the plan could not detect the leak, you shall revise the plan and document the basis for the changes. You shall complete the revisions to the plan no later than 180 days after discovery of the leak.

(3) You shall maintain, at all times, the monitoring plan that is currently in use. The current plan shall be maintained on-site, or shall be accessible from a central location by computer or other means that provide access within 2 hours after a request. If the monitoring plan is changed, you must retain the most recent superseded plan for at least 5 years from the date of its creation. The superseded plan shall be retained on-site or accessible from a central location by computer or other means that provide access within 2 hours after a request.

(d) *Simplifying assumptions for entrance mean concentration.* If you are complying with paragraph (a) or (b) of this section, you may elect to determine the entrance mean concentration as specified in paragraph (d)(1) or (2) of this section.

(1) Assume that the entrance mean concentration of the monitored substance is zero; or,

(2) Determine the entrance mean concentration of a monitored substance at a sampling location anywhere upstream of the heat exchanger or heat exchange system, provided that there is not a reasonable opportunity for the concentration to change at the entrance to each heat exchanger or heat exchange system.

Repair Requirements for Heat Exchange Systems

§ 63.1087 What actions must I take if a leak is detected?

If a leak is detected, you must comply with the requirements in paragraphs (a)

and (b) of this section unless repair is delayed according to § 63.1088.

(a) Repair the leak as soon as practical but not later than 45 calender days after you received the results of monitoring tests that indicated a leak. You must repair the leak unless you demonstrate that the results are due to a condition other than a leak.

(b) Once the leak has been repaired, use the monitoring requirements in § 63.1086 within 7 calender days of the repair or startup, whichever is later, to confirm that the heat exchange system has been repaired.

§ 63.1088 In what situations may I delay leak repair, and what actions must I take for delay of repair?

You may delay the repair of heat exchange systems if the leaking equipment is isolated from the process. You may also delay repair if repair is technically infeasible without a shutdown, and you meet one of the conditions in paragraphs (a) through (c) of this section.

(a) If a shutdown is expected within the next 2 months of determining delay of repair is necessary, you are not required to have a special shutdown before that planned shutdown.

(b) If a shutdown is not expected within the next 2 months of determining delay of repair is necessary, you may delay repair if a shutdown for repair would cause greater emissions than the potential emissions from delaying repair until the next shutdown of the process equipment associated with the leaking heat exchanger. You must document the basis for the determination that a shutdown for repair would cause greater emissions than the emissions likely to result from delay of repair. The documentation process must include the activities in paragraphs (b)(1) through (4) of this section.

(1) State the reason(s) for delaying repair.

(2) Specify a schedule for completing the repair as soon as practical.

(3) Calculate the potential emissions from the leaking heat exchanger by multiplying the concentration of HAP listed in Table 1 to this subpart (or other monitored substances) in the cooling water from the leaking heat exchanger by the flow rate of the cooling water from the leaking heat exchanger and by the expected duration of the delay.

(4) Determine emissions of HAP listed in Table 1 to this subpart (or other monitored substances) from purging and depressurizing the equipment that will result from the unscheduled shutdown for the repair.

(c) If repair is delayed because the necessary equipment, parts or personnel are not available, you may delay repair a maximum of 120 calendar days. You must demonstrate that the necessary equipment, parts or personnel were not available.

Recordkeeping and Reporting Requirements for Heat Exchange Systems

§ 63.1089 What records must I keep?

You must keep the records in paragraphs (a) through (e) of this section, according to the requirements of § 63.1109(c).

(a) Monitoring data required by § 63.1086 that indicate a leak, the date the leak was detected, or, if applicable, the basis for determining there is no leak.

(b) The dates of efforts to repair leaks.

(c) The method or procedures used to confirm repair of a leak and the date the repair was confirmed.

(d) Documentation of delay of repair as specified in § 63.1088.

(e) If you validate a 40 CFR part 136 method for the HAP listed in Table 1 to this subpart according to the procedures in appendix D to this part, then you must keep a record of the test data and calculations used in the validation.

§ 63.1090 What reports must I submit?

If you delay repair for your heat exchange system, you must report the delay of repair in the semiannual report required by § 63.1110(e). If the leak remains unrepaired, you must continue to report the delay of repair in semiannual reports until you repair the leak. You must include the information in paragraphs (a) through (e) of this section in the semiannual report.

(a) The fact that a leak was detected, and the date that the leak was detected.

(b) Whether or not the leak has been repaired.

(c) The reasons for delay of repair. If you delayed the repair as provided in § 63.1088(b), documentation of emissions estimates.

(d) If a leak remains unrepaired, the expected date of repair.

(e) If a leak is repaired, the date the leak was successfully repaired.

Background for Waste Requirements

§ 63.1091 What do the waste requirements do?

This subpart requires you to comply with 40 CFR part 61, subpart FF, National Emission Standards for Benzene Waste Operations. There are some differences between the ethylene production waste requirements and those of subpart FF.

§ 63.1092 What are the major differences between the requirements of 40 CFR part 61, subpart FF, and the waste requirements for ethylene production sources?

The major differences between the requirements of 40 CFR part 61, subpart FF, and the requirements for ethylene production sources are listed in paragraphs (a) through (d) of this section.

(a) The requirements for ethylene production sources apply to all ethylene production sources that are part of a major source. The requirements do not include a provision to exempt sources with a total annual benzene quantity less than 10 megagrams per year (Mg/yr) from control requirements.

(b) The requirements for ethylene production sources apply to continuous butadiene waste streams which do not contain benzene quantities that would make them subject to the management and treatment requirements of 40 CFR part 61, subpart FF.

(c) The requirements for ethylene production sources do not include the compliance options at 40 CFR 61.342(c)(3)(ii), (d) and (e) for sources with a total annual benzene quantity less than 10 Mg/yr.

(d) If you transfer waste off-site, you must comply with the requirements in § 63.1096 rather than 40 CFR 61.342(f).

Applicability for Waste Requirements

§ 63.1093 Does this subpart apply to my waste streams?

The waste stream provisions of this subpart apply to your waste streams if you own or operate an ethylene production facility expressly referenced to this subpart XX from subpart YY of this part. The provisions of subpart A (General Provisions) of this part do not apply to this subpart except as specified in a referencing subpart.

§ 63.1094 What waste streams are exempt from the requirements of this subpart?

The types of waste described in paragraphs (a) and (b) of this section are exempt from this subpart.

(a) Waste in the form of gases or vapors that is emitted from process fluids.

(b) Waste that is contained in a segregated storm water sewer system.

Waste Requirements

§ 63.1095 What specific requirements must I comply with?

For waste that is not transferred off-site, you must comply with the requirements in paragraph (a) of this section for continuous butadiene waste streams and paragraph (b) of this section for benzene waste streams. If you

transfer waste off-site, you must comply with the requirements of § 63.1096.

(a) *Continuous butadiene waste streams.* Manage and treat continuous butadiene waste streams that contain greater than or equal to 10 ppmv 1,3-butadiene and have a flow rate greater than or equal to 0.02 liters per minute, according to either paragraph (a)(1) or (2) of this section. If the total annual benzene quantity from waste at your facility is less than 10 Mg/yr, as determined according to 40 CFR 61.342(a), the requirements of paragraph (a)(3) of this section apply also.

(1) Route the continuous butadiene stream to a treatment process or wastewater treatment system used to treat benzene waste streams that complies with the standards specified in 40 CFR 61.348. Comply with the requirements of 40 CFR part 61, subpart FF; with the changes in Table 2 to this subpart, and as specified in paragraphs (a)(1)(i) through (v) of this section.

(i) Determine the butadiene concentration of the waste stream according to 40 CFR 61.355(c)(1) through (3), except substitute ''1,3-butadiene'' for each occurrence of ''benzene.'' You may validate 40 CFR part 136 methods for 1,3-butadiene according to the procedures in appendix D to this part. You do not need to determine the butadiene concentration of a waste stream if you designate that the stream must be controlled.

(ii) Comply with 40 CFR 61.342(c)(1)(ii) and (iii) for each waste management unit that receives or manages the waste stream prior to and during treatment or recycling of the waste stream.

(iii) Comply with the recordkeeping requirements in 40 CFR 61.356(b), (b)(1) and (b)(2), except substitute ''1,3-butadiene'' for each occurrence of ''benzene'' and ''continuous butadiene waste stream'' for each occurrence of ''waste stream.''

(iv) Comply with the reporting requirements in 40 CFR 61.357(a), (a)(2), (a)(3), (a)(3)(iii) through (v), and (d)(1) and (2), except substitute ''1,3-butadiene'' for each occurrence of ''benzene'' and ''continuous butadiene waste stream'' for each occurrence of ''waste stream.''

(v) Include only the information in 40 CFR 61.357(a)(2) and (a)(3)(iii) through (v) in the report required in 40 CFR 61.357(a) and (d)(2).

(2) Comply with the process wastewater requirements of subpart G of this part. Submit the information required in § 63.146(b) in the Notification of Compliance Status required by § 63.1110(d). Submit the information required in § 63.146(c) through (e) in either the Periodic Reports required in § 63.152 or the Periodic Reports required in § 63.1110(e).

(3) If the total annual benzene quantity from waste at your facility is less than 10 Mg/yr, as determined according to 40 CFR 61.342(a), comply with the requirements of this section at all times except during periods of startup, shutdown, and malfunction, if the startup, shutdown, or malfunction precludes the ability of the affected source to comply with the requirements of this section and the owner or operator follows the provisions for periods of startup, shutdown, and malfunction, as specified in § 63.1111.

(b) *Benzene waste streams.* For benzene-containing streams, you must comply with the requirements of 40 CFR part 61, subpart FF, except as specified in Table 2 to this subpart. You must manage and treat waste streams as specified in either paragraph (b)(1) or (2) of this section.

(1) If the total annual benzene quantity from waste at your facility is less than 10 Mg/yr, as determined according to 40 CFR 61.342(a), manage and treat spent caustic waste streams and dilution steam blowdown waste streams according to 40 CFR 61.342(c)(1) through (c)(3)(i). The requirements of this paragraph (b)(1) shall apply at all times except during periods of startup, shutdown, and malfunction, if the startup, shutdown, or malfunction precludes the ability of the affected source to comply with the requirements of this section and the owner or operator follows the provisions for periods of startup, shutdown, and malfunction, as specified in § 63.1111.

(2) If the total annual benzene quantity from waste at your facility is greater than or equal to 10 Mg/yr, as determined according to 40 CFR 61.342(a), you must manage and treat waste streams according to any of the options in 40 CFR 61.342(c)(1) through (e).

§ 63.1096 What requirements must I comply with if I transfer waste off-site?

If you elect to transfer waste off-site, you must comply with the requirements in paragraphs (a) through (d) of this section.

(a) Include a notice with the shipment or transport of each waste stream. The notice shall state that the waste stream contains organic HAP that are to be treated in accordance with the provisions of this subpart. When the transport is continuous or ongoing (for example, discharge to a publicly-owned treatment works), the notice shall be submitted to the treatment operator initially and whenever there is a change in the required treatment.

(b) You may not transfer the waste stream unless the transferee has submitted to the Administrator a written certification that the transferee will manage and treat any waste stream received from a source subject to the requirements of this subpart in accordance with the requirements of this subpart.

(c) By providing this written certification to the Administrator, the certifying entity accepts responsibility for compliance with the regulatory provisions in this subpart with respect to any shipment of waste covered by the written certification. Failure to abide by any of those provisions with respect to such shipments may result in enforcement action by EPA against the certifying entity in accordance with the enforcement provisions applicable to violations of those provisions by owners or operators of sources.

(d) The certifying entity may revoke the written certification by sending a written statement to the Administrator and you. The notice of revocation must provide at least 90 days notice that the certifying entity is rescinding acceptance of responsibility for compliance with the regulatory provisions of this subpart. Upon expiration of the notice period, you may not transfer the waste stream to that off-site treatment operation. Written certifications and revocation statements to the Administrator from the transferees of waste shall be signed by the responsible official of the certifying entity, provide the name and address of the certifying entity, and be sent to the appropriate EPA Regional Office at the addresses listed in 40 CFR 63.13. Such written certifications are not transferable by the treater to other off-site waste treatment operators.

Implementation and Enforcement

§ 63.1097 Who implements and enforces this subpart?

(a) This subpart can be implemented and enforced by the U.S. Environmental Protection Agency (EPA), or a delegated authority such as the applicable State, local, or tribal agency. If the EPA Administrator has delegated authority to a State, local, or tribal agency, then that agency has the authority to implement and enforce this subpart. Contact the applicable EPA Regional Office to find out if this subpart is delegated.

(b) In delegating implementation and enforcement authority of this subpart to a State, local, or tribal agency under 40 CFR part 63, subpart E, the authorities

contained in paragraphs (b)(1) through (5) of this section are retained by the EPA Administrator and are not transferred to the State, local, or tribal agency.

(1) Approval of alternatives to the nonopacity emissions standards in §§ 63.1085, 63.1086 and 63.1095, under § 63.6(g). Where these standards reference another subpart, the cited provisions will be delegated according to the delegation provisions of the referenced subpart.

(2) [Reserved]

(3) Approval of major changes to test methods under § 63.7(e)(2)(ii) and (f) and as defined in § 63.90.

(4) Approval of major changes to monitoring under § 63.8(f) and as defined in § 63.90.

(5) Approval of major changes to recordkeeping and reporting under § 63.10(f) and as defined in § 63.90.

Tables to Subpart XX of Part 63

TABLE 1 TO SUBPART XX OF PART 63.—HAZARDOUS AIR POLLUTANTS

Hazardous air pollutant	CAS No.
Benzene	71432
1,3-Butadiene	106990
Cumene	98828
Ethyl benzene	100414
Hexane	110543
Naphthalene	91203
Styrene	100425
Toluene	108883
o-Xylene	95476
m-Xylene	108383
p-Xylene	106423

TABLE 2 TO SUBPART XX OF PART 63.—REQUIREMENTS OF 40 CFR PART 61, SUBPART FF, NOT INCLUDED IN THE REQUIREMENTS FOR THIS SUBPART AND ALTERNATE REQUIREMENTS

If the total annual benzene quatity for waste from your facility is * * *	Do not comply with:	Instead, comply with:
1. Less than 10 Mg/yr	40 CFR 61.340	§ 63.1093.
	40 CFR 61.342(c)(3)(ii), (d), and (e)	There is no equivalent requirement.
	40 CFR 61.342(f)	§ 61.1096.
	40 CFR 61.355(j) and (k)	There is no equivalent requirement.
	40 CFR 61.356(b)(2)(ii), (b)(3) through (b)(5)	There is no equivalent requirement.
	The requirement to submit the information required in 40 CFR 61.357(a) to the Administrator within 90 days after January 7, 1993.	The requirement to submit the information required in 40 CFR 61.357(a) as part of the Initial Notification required in 40 CFR 63.1110(c).
	The requirement in 40 CFR 61.357(d) to submit the information in 40 CFR 61.357(d)(1) and (d)(2) if the TAB quantity from your facility is equal to or greater than 10 Mg/yr.	The requirement to submit the information in 40 CFR 61.357(d)(1) and (d)(2) for spent caustic, dilution steam blowdown, and continuous butadiene waste streams.
	The requirement in 40 CFR 61.357(d)(1) to submit the information required in 40 CFR 63.357(d)(1) to the Administrator within 90 days after January 7, 1993.	The requirement to submit the information required in 40 CFR 61.357(d)(1) as part of the Notification of Compliance Status required in 40 CFR 63.1110(d).
	40 CFR 61.357(d)(3) through (d)(5)	There is no equivalent requirement.
2. Greater than or equal to 10 Mg/yr	40 CFR 61.340	§ 61.1093.
	40 CFR 61.342(f)	§ 61.1096.
	The requirement to submit the information required in 40 CFR 61.357(a) to the Administrator within 90 days after January 7, 1993.	The requirement to submit the information required in 40 CFR 61.357(a) as part of the Initial Notification required in 40 CFR 63.1110(c).
	The requirement in 40 CFR 61.357(d) to submit the information in 40 CFR 61.357(d)(1) and (d)(2) if the TAB quantity from your facility is equal to or greater than 10 Mg/yr.	The requirement to submit the information in 40 CFR 61.357(d)(1) and (d)(2) as part of the Notification of Compliance Status required in 40 CFR 63.1110(d).

Subpart SS—[Amended]

3. Section 63.981 is amended by adding in alphabetical order a definition of *Supplemental combustion air* to read as follows:

§ 63.981 Definitions.

* * * * *

Supplemental combustion air means the air that is added to a vent stream after the vent stream leaves the unit operation. Air that is part of the vent stream as a result of the nature of the unit operation is not considered supplemental combustion air. Air required to operate combustion device burner(s) is not considered supplemental combustion air. Air required to ensure the proper operation of catalytic oxidizers, to include the intermittent addition of air upstream of the catalyst bed to maintain a minimum threshold flow rate through the catalyst bed or to avoid excessive temperatures in the catalyst bed, is not considered to be supplemental combustion air.

* * * * *

4. Section 63.983 is amended by:

a. Revising paragraphs (a)(3)(i) and (a)(3)(ii);

b. Revising the heading for paragraph (b); and

c. Adding paragraph (b)(4).

The revisions and additions read as follows:

§ 63.983 Closed vent systems.

(a) * * *

(3) * * *

(i) Properly install, maintain, and operate a flow indicator that is capable of taking periodic readings. Records shall be generated as specified in § 63.998(d)(1)(ii)(A). The flow indicator shall be installed at the entrance to any bypass line.

(ii) Secure the bypass line valve in the non-diverting position with a car-seal or a lock-and-key type configuration. Records shall be generated as specified in § 63.998(d)(1)(ii)(B).

* * * * *

(b) *Closed vent system inspection and monitoring requirements.* * * *

(4) For each bypass line, the owner or operator shall comply with paragraph (b)(4)(i) or (ii) of this section.

(i) If a flow indicator is used, take a reading at least once every 15 minutes.

(ii) If the bypass line valve is secured in the non-diverting position, visually inspect the seal or closure mechanism at least once every month to verify that the valve is maintained in the non-diverting position, and the vent stream is not diverted through the bypass line.

* * * * *

5. Section 63.987 is amended by:

a. Revising the definition of D_j in paragraph (b)(3)(ii); and

b. Revising paragraph (b)(3)(iii).

The revisions read as follows:

§ 63.987 Flare requirements.

* * * * *

(b) * * *

(3) * * *

(ii) * * *

D_j = Concentration of sample component j, in parts per million by volume on a wet basis, as measured for organics by Method 18 of 40 CFR part 60, appendix A, or by American Society for Testing and Materials (ASTM) D6420–99 (available for purchase from at least one of the following addresses: 100 Barr Harbor Drive, West Conshohocken, PA 19428–2959; or University Microfilms International, 300 North Zeeb Road, Ann Arbor, MI 48106) under the conditions specified in § 63.997(e)(2)(iii)(D)(*1*) through (*3*). Hydrogen and carbon monoxide are measured by ASTM D1946–90; and

* * * * *

(iii) The actual exit velocity of a flare shall be determined by dividing the volumetric flow rate (in unit of standard temperature and pressure), as determined by Method 2, 2A, 2C, 2D, 2F, or 2G of 40 CFR part 60, appendix A, as appropriate, by the unobstructed (free) cross sectional area of the flare tip.

* * * * *

6. Part 63 is amended by adding § 63.992 to read as follows:

§ 63.992 Implementation and enforcement.

(a) This subpart can be implemented and enforced by the U.S. Environmental Protection Agency (EPA), or a delegated authority such as the applicable State, local, or tribal agency. If the EPA Administrator has delegated authority to a State, local, or tribal agency, then that agency has the authority to implement and enforce this subpart. Contact the applicable EPA Regional Office to find out if this subpart is delegated to a State, local, or tribal agency.

(b) In delegating implementation and enforcement authority of this subpart to a State, local, or tribal agency under section 40 CFR part 63, subpart E, the authorities contained in paragraphs (b)(1) through (5) of this section are retained by the EPA Administrator and are not transferred to the State, local, or tribal agency.

(1) Approval of alternatives to the nonopacity emissions standards in §§ 63.983(a) and (d), 63.984, 63.985(a), 63.986(a), 63.987(a), 63.988(a), 63.990(a), 63.993(a), 63.994(a), and 63.995(a) under § 63.6(g). Where these standards reference another subpart, the cited provisions will be delegated according to the delegation provisions of the referenced subpart.

(2) [Reserved]

(3) Approval of major changes to test methods under § 63.7(e)(2)(ii) and (f) and as defined in § 63.90.

(4) Approval of major changes to monitoring under § 63.8(f) and as defined in § 63.90.

(5) Approval of major changes to recordkeeping and reporting under § 63.10(f) and as defined in § 63.90.

* * * * *

7. Section 63.997 is amended by:

a. Revising paragraph (e)(2)(ii);

b. Revising paragraph (e)(2)(iii) introductory text;

c. Revising the first sentence of paragraph (e)(2)(iii)(C)(*1*);

d. Revising paragraph (e)(2)(iii)(D);

e. Adding paragraph (e)(2)(iii)(E);

f. Revising paragraph (e)(2)(iv) introductory text;

g. Removing and reserving paragraphs (e)(2)(iv)(B)(*2*) and (*3*); and

h. Adding paragraphs (e)(2)(iv)(F) through (I).

The revisions and additions read as follows:

§ 63.997 Performance test and compliance assessment requirements for control devices.

* * * * *

(e) * * *

(2) * * *

(ii) *Gas volumetric flow rate.* The gas volumetric flow rate shall be determined using Method 2, 2A, 2C, 2D, 2F, or 2G of 40 CFR part 60, appendix A, as appropriate.

(iii) *Total organic regulated material or TOC concentration.* To determine compliance with a parts per million by volume total organic regulated material or TOC limit, the owner or operator shall use Method 18 or 25A of 40 CFR part 60, appendix A, as applicable. The ASTM D6420–99 may be used in lieu of Method 18 of 40 CFR part 60, appendix A, under the conditions specified in paragraphs (e)(2)(iii)(D)(1) through (3) of this section. Alternatively, any other method or data that have been validated according to the applicable procedures in Method 301 of appendix A of 40 CFR part 63 may be used. The procedures specified in paragraphs (e)(2)(iii)(A), (B), (D), and (E) of this section shall be used to calculate parts per million by volume concentration. The calculated concentration shall be corrected to 3 percent oxygen using the procedures specified in paragraph (e)(2)(iii)(C) of this section if a combustion device is

the control device and supplemental combustion air is used to combust the emissions.

* * * * *

(C) * * *

(*1*) The emission rate correction factor (or excess air), integrated sampling and analysis procedures of Method 3B of 40 CFR part 60, appendix A, or American Society of Mechanical Engineers (ASME) PTC 19–10–1981-–Part 10 (available for purchase from: ASME International, Three Park Avenue, New York, NY 10016–5990, 800–843–2763 or 212–591–7722), shall be used to determine the oxygen concentration.

* * *

* * * * *

(D) To measure the total organic regulated material concentration at the outlet of a control device, use Method 18 of 40 CFR part 60, appendix A, or ASTM D6420–99. If you have a combustion control device, you must first determine which regulated material compounds are present in the inlet gas stream using process knowledge or the screening procedure described in Method 18. In conducting the performance test, analyze samples collected at the outlet of the combustion control device as specified in Method 18 or ASTM D6420–99 for the regulated material compounds present at the inlet of the control device. The method ASTM D6420–99 may be used only under the conditions specified in paragraphs (e)(2)(iii)(D)(*1*) through (*3*) of this section.

(*1*) If the target compound(s) is listed in Section 1.1 of ASTM D6420–99 and the target concentration is between 150 parts per billion by volume and 100 parts per million by volume.

(*2*) If the target compound(s) is not listed in Section 1.1 of ASTM D6420–99 but is potentially detected by mass spectrometry, an additional system continuing calibration check after each run, as detailed in Section 10.5.3 of ASTM D6420–99, must be followed, met, documented, and submitted with the performance test report even if you do not use a moisture condenser or the compound is not considered soluble.

(*3*) If a minimum of one sample/analysis cycle is completed at least every 15 minutes.

(E) To measure the TOC concentration, use Method 18 of 40 CFR part 60, appendix A, or use Method 25A of 40 CFR part 60, appendix A, according to the procedures in paragraphs (e)(2)(iii)(E)(*1*) through (*4*) of this section.

(*1*) Calibrate the instrument on the predominant regulated material compound.

(*2*) The test results are acceptable if the response from the high level calibration gas is at least 20 times the standard deviation for the response from the zero calibration gas when the instrument is zeroed on its most sensitive scale.

(*3*) The span value of the analyzer must be less than 100 parts per million by volume.

(*4*) Report the results as carbon, calculated according to Equation 25A–1 of Method 25A of 40 CFR part 60, appendix A.

(iv) *Percent reduction calculation.* To determine compliance with a percent reduction requirement, the owner or operator shall use Method 18, 25, or 25A of 40 CFR part 60, appendix A, as applicable. The method ASTM D6420–99 may be used in lieu of Method 18 of 40 CFR part 60, appendix A, under the conditions specified in paragraphs (e)(2)(iii)(D)(*1*) through (*3*) of this section. Alternatively, any other method or data that have been validated according to the applicable procedures in Method 301 of appendix A of 40 CFR part 63 may be used. The procedures specified in paragraphs (e)(2)(iv)(A) through (I) of this section shall be used to calculate percent reduction efficiency.

* * * * *

(F) To measure inlet and outlet concentrations of total organic regulated material, use Method 18 of 40 CFR part 60, appendix A, or ASTM D6420–99, under the conditions specified in paragraphs (e)(2)(iii)(D)(*1*) through (*3*) of this section. In conducting the performance test, collect and analyze samples as specified in Method 18 or ASTM D6420–99. You must collect samples simultaneously at the inlet and outlet of the control device. If the performance test is for a combustion control device, you must first determine which regulated material compounds are present in the inlet gas stream (i.e., uncontrolled emissions) using process knowledge or the screening procedure described in Method 18. Quantify the emissions for the regulated material compounds present in the inlet gas stream for both the inlet and outlet gas streams for the combustion device.

(G) To determine inlet and outlet concentrations of TOC, use Method 25 of 40 CFR part 60, appendix A. Measure the total gaseous non-methane organic (TGNMO) concentration of the inlet and outlet vent streams using the procedures of Method 25. Use the TGNMO concentration in Equations 4 and 5 of paragraph (e)(2)(iv)(B) of this section.

(H) Method 25A of 40 CFR part 60, appendix A, may be used instead of Method 25 to measure inlet and outlet concentrations of TOC if the condition in either paragraph (e)(2)(iv)(H)(*1*) or (*2*) of this section is met.

(*1*) The concentration at the inlet to the control system and the required level of control would result in exhaust TGNMO concentrations of 50 parts per million by volume or less.

(*2*) Because of the high efficiency of the control device, the anticipated TGNMO concentration of the control device exhaust is 50 parts per million by volume or less, regardless of the inlet concentration.

(I) If the uncontrolled or inlet gas stream to the control device contains formaldehyde, you must conduct emissions testing according to paragraph (e)(2)(iv)(I)(*1*) or (*2*) of this section.

(*1*) If you elect to comply with a percent reduction requirement and formaldehyde is the principal regulated material compound (i.e., greater than 50 percent of the regulated material compounds in the stream by volume), you must use Method 316 or 320 of 40 CFR part 63, appendix A, to measure formaldehyde at the inlet and outlet of the control device. Use the percent reduction in formaldehyde as a surrogate for the percent reduction in total regulated material emissions.

(*2*) If you elect to comply with an outlet total organic regulated material concentration or TOC concentration limit, and the uncontrolled or inlet gas stream to the control device contains greater than 10 percent (by volume) formaldehyde, you must use Method 316 or 320 of 40 CFR part 63, appendix A, to separately determine the formaldehyde concentration. Calculate the total organic regulated material concentration or TOC concentration by totaling the formaldehyde emissions measured using Method 316 or 320 and the other regulated material compound emissions measured using Method 18 or 25/25A.

* * * * *

Subpart TT—[Amended]

8. Section 63.1000 is amended by adding paragraph (b) to read as follows:

§ 63.1000 Applicability.

* * * * *

(b) *Implementation and enforcement.* This subpart can be implemented and enforced by the U.S. Environmental Protection Agency (EPA), or a delegated authority such as the applicable State, local, or tribal agency. If the EPA Administrator has delegated authority to a State, local, or tribal agency, then that agency has the authority to implement

and enforce this subpart. Contact the applicable EPA Regional Office to find out if this subpart is delegated to a State, local, or tribal agency.

(1) In delegating implementation and enforcement authority of this subpart to a State, local, or tribal agency under section 40 CFR part 63, subpart E, the authorities contained in paragraphs (b)(1)(i) through (v) of this section are retained by the EPA Administrator and are not transferred to the State, local, or tribal agency.

(i) Approval of alternatives to the nonopacity emissions standards in §§ 63.1003 through 63.1015, under § 63.6(g). Where these standards reference another subpart, the cited provisions will be delegated according to the delegation provisions of the referenced subpart.

(ii) [Reserved]

(iii) Approval of major changes to test methods under § 63.7(e)(2)(ii) and (f) and as defined in § 63.90.

(iv) Approval of major changes to monitoring under § 63.8(f) and as defined in § 63.90.

(v) Approval of major changes to recordkeeping and reporting under § 63.10(f) and as defined in § 63.90.

* * * * *

Subpart UU—[Amended]

9. Section 63.1019 is amended by adding paragraph (f) to read as follows:

§ 63.1019 Applicability.

* * * * *

(f) *Implementation and enforcement.* This subpart can be implemented and enforced by the U.S. Environmental Protection Agency (EPA), or a delegated authority such as the applicable State, local, or tribal agency. If the EPA Administrator has delegated authority to a State, local, or tribal agency, then that agency has the authority to implement and enforce this subpart. Contact the applicable EPA Regional Office to find out if this subpart is delegated to a State, local, or tribal agency.

(1) In delegating implementation and enforcement authority of this subpart to a State, local, or tribal agency under section 40 CFR part 63, subpart E, the authorities contained in paragraphs (f)(i) through (v) of this section are retained by the EPA Administrator and are not transferred to the State, local, or tribal agency.

(i) Approval of alternatives to the nonopacity emissions standards in §§ 63.1022 through 62.1034, under § 63.6(g), and the standards for quality improvement programs in § 63.1035. Where these standards reference another subpart, the cited provisions will be delegated according to the delegation provisions of the referenced subpart.

(ii) [Reserved]

(iii) Approval of major changes to test methods under § 63.7(e)(2)(ii) and (f) and as defined in § 63.90.

(iv) Approval of major changes to monitoring under § 63.8(f) and as defined in § 63.90.

(v) Approval of major changes to recordkeeping and reporting under § 63.10(f) and as defined in § 63.90.

* * * * *

Subpart WW—[Amended]

10. Part 63 is amended by adding § 63.1067 to subpart WW to read as follows:

§ 63.1067 Implementation and enforcement.

(a) This subpart can be implemented and enforced by the U.S. Environmental Protection Agency (EPA), or a delegated authority such as the applicable State, local, or tribal agency. If the EPA Administrator has delegated authority to a State, local, or tribal agency, then that agency has the authority to implement and enforce this subpart. Contact the applicable EPA Regional Office to find out if this subpart is delegated to a State, local, or tribal agency.

(b) In delegating implementation and enforcement authority of this subpart to a State, local, or tribal agency under section 40 CFR part 63, subpart E, the authorities contained in paragraphs (b)(1) through (5) of this section are retained by the EPA Administrator and are not transferred to the State, local, or tribal agency.

(1) Approval of alternatives to the nonopacity emissions standards in §§ 63.1062 and 63.1063(a) and (b) for alternative means of emission limitation, under § 63.6(g).

(2) [Reserved]

(3) Approval of major changes to test methods under § 63.7(e)(2)(ii) and (f) and as defined in § 63.90.

(4) Approval of major changes to monitoring under § 63.8(f) and as defined in § 63.90.

(5) Approval of major changes to recordkeeping and reporting under § 63.10(f) and as defined in § 63.90.

Subpart YY—[Amended]

11. Section 63.1100 is amended by:

a. Revising the first sentence of paragraph (a);

b. Adding four entries in alphabetical order and footnotes (c) and (d) to Table 1 to § 63.1100(a);

c. Revising the first sentence of the introductory text of paragraph (g);

d. Revising paragraphs (g)(1) through (4);

e. Revising the heading for paragraph (g)(5); and

f. Adding paragraph (g)(6).

The revisions and additions read as follows:

§ 63.1100 Applicability.

(a) *General.* This subpart applies to source categories and affected sources specified in § 63.1103(a) through (h).

* * *

TABLE 1 TO § 63.1100(A)—SOURCE CATEGORY MACT [a] APPLICABILITY

Source category	Storage vessels	Process vents	Transfer racks	Equipment leaks	Wastewater streams	Other	Source category MACT requirements
* *	*		*	*	*		*
Carbon Black Production	No	Yes	No	No	No	No	§ 63.1103(f).
Cyanide Chemicals Manufacturing	Yes	Yes	Yes	Yes	Yes	No	§ 63.1103(g).
Ethylene Production	Yes	Yes	Yes	Yes	Yes	Yes [c]	§ 63.1103(e).
* *	*		*	*	*		*
Spandex Production	Yes	Yes	No	No	No	Yes [d]	§ 63.1103(h).
* *	*		*	*	*		*

[a] Maximum achievable control technology.
[c] Heat exchange systems as defined in § 63.1103(e)(2).
[d] Fiber spinning lines.

* * * * * * *

(g) *Overlap with other regulations.* Paragraphs (g)(1) through (6) of this section specify the applicability of this subpart YY emission point requirements when other rules may apply. * * *

(1) *Overlap of subpart YY with other regulations for storage vessels.* (i) After the compliance dates specified in § 63.1102, a storage vessel that must be controlled according to the requirements of this subpart and subpart G of this part is required to comply only with the storage vessel requirements of this subpart.

(ii) After the compliance dates specified in § 63.1102, a storage vessel that must be controlled according to the requirements of this subpart and subpart Ka or Kb of 40 CFR part 60 is required to comply only with the storage vessel requirements of this subpart.

(2) *Overlap of subpart YY with other regulations for process vents.* (i) After the compliance dates specified in § 63.1102, a process vent that must be controlled according to the requirements of this subpart and subpart G of this part is in compliance with this subpart if it complies with either set of requirements. The owner or operator must specify the rule with which they will comply in the Notification of Compliance Status report required by § 63.1110(a)(4).

(ii) After the compliance dates specified in § 63.1102, a process vent that must be controlled according to the requirements of this subpart and subpart III, RRR or NNN of 40 CFR part 60 is required to comply only with the process vent requirements of this subpart.

(3) *Overlap of subpart YY with other regulations for transfer racks.* After the compliance dates specified in § 63.1102, a transfer rack that must be controlled according to the requirements this subpart and subpart G of this part is required to comply only with the transfer rack requirements of this subpart.

(4) *Overlap of subpart YY with other regulations for equipment leaks.* (i) After the compliance dates specified in § 63.1102, equipment that must be controlled according to this subpart and 40 CFR part 60, subpart VV, or 40 CFR part 61, subpart J or subpart V, is required only to comply with the equipment leak requirements of this subpart.

(ii) After the compliance dates specified in § 63.1102, equipment that must be controlled according to this subpart and subpart H of this part is in compliance with the equipment leak requirements of this subpart if it complies with either set of requirements. The owner or operator must specify the rule with which they will comply in the Notification of Compliance Status report required by § 63.1110(a)(4).

(5) *Overlap of subpart YY with other regulations for wastewater for source categories other than ethylene production.*

* * * * *

(6) *Overlap of subpart YY with other regulations for waste for the ethylene production source category.* (i) After the compliance date specified in § 63.1102, a waste stream that is conveyed, stored, or treated in a wastewater stream management unit, waste management unit, or wastewater treatment system that receives streams subject to both the control requirements of § 63.1103(e)(3) for ethylene production sources and the provisions of §§ 63.133 through 63.147 shall comply as specified in paragraphs (g)(6)(i)(A) through (C) of this section. Compliance with the provisions of this paragraph (g)(6)(i) shall constitute compliance with the requirements of this subpart for that waste stream.

(A) Comply with the provisions in §§ 63.133 through 63.137 and 63.140 for all equipment used in the storage and conveyance of the waste stream.

(B) Comply with the provisions in §§ 63.1103(e), 63.138, and 63.139 for the treatment and control of the waste stream.

(C) Comply with the provisions in §§ 63.143 through 63.148 for monitoring and inspections of equipment and for recordkeeping and reporting requirements. The owner or operator is not required to comply with the monitoring, recordkeeping, and reporting requirements associated with the treatment and control requirements in §§ 61.355 through 61.357.

(ii) After the compliance date specified in § 63.1102, compliance with § 63.1103(e) shall constitute compliance with the Benzene Waste Operations NESHAP (subpart FF of 40 CFR part 61) for waste streams that are subject to both the control requirements of § 63.1103(e)(3) for ethylene production sources and the control requirements of 40 CFR part 61, subpart FF.

12. Section 63.1101 is amended by:

a. Adding a sentence at the end of the introductory text;

b. Adding a sentence at the end of the definition of ''process vent'; and

c. Revising the definitions of ''Shutdown,'' ''Storage vessel or tank,'' and ''Total organic compounds or TOC.''

The revisions and additions read as follows:

§ 63.1101 Definitions.

* * * The definitions in this section do not apply to waste requirements for ethylene production sources.

* * * * *

Process vent * * * This definition does not apply to ethylene production sources. Ethylene process vents are defined in § 63.1103(e)(2).

* * * * *

Shutdown means the cessation of operation of an affected source or equipment that is used to comply with this subpart, or the emptying and degassing of a storage vessel. For the purposes of this subpart, shutdown includes, but is not limited to, periodic maintenance, replacement of equipment, or repair. Shutdown does not include the routine rinsing or washing of equipment in batch operation between batches. Shutdown includes the decoking of ethylene production unit furnaces.

* * * * *

Storage vessel or *tank,* for the purposes of regulation under the storage vessel provisions of this subpart, means a stationary unit that is constructed primarily of nonearthen materials (such as wood, concrete, steel, fiberglass, or plastic) that provides structural support and is designed to hold an accumulation of liquids or other materials. Storage vessel includes surge control vessels and bottoms receiver vessels. For the purposes of regulation under the storage vessel provisions of this subpart, storage vessel does not include vessels permanently attached to motor vehicles such as trucks, railcars, barges, or ships; pressure vessels designed to operate in excess of 204.9 kilopascals and without emissions to the atmosphere; or wastewater storage vessels. Wastewater storage vessels are covered under the wastewater provisions of § 63.1106.

* * * * *

Total organic compounds or (TOC) means the total gaseous organic compounds (minus methane and ethane) in a vent stream, with the concentrations expressed on a carbon basis.

* * * * *

13. Section 63.1102 is amended by revising paragraph (a) adding and reserving paragraph (b), and adding a Table 1 to § 63.1102 to read as follows:

§ 63.1102 Compliance schedule.

(a) *General requirements.* Affected sources, as defined in § 63.1103(a)(1)(i) for acetyl resins production, § 63.1103(b)(1)(i) for acrylic and modacrylic fiber production, § 63.1103(c)(1)(i) for hydrogen fluoride production, § 63.1103(d)(1)(i) for polycarbonate production, § 63.1103(e)(1)(i) for ethylene production, § 63.1103(f)(1)(i) for carbon black production, § 63.1103(g)(1)(i) for cyanide chemicals manufacturing, or § 63.1103(h)(1)(i) for spandex production shall comply with the appropriate provisions of this subpart and the subparts referenced by this subpart according to the schedule in paragraph (a)(1) or (2) of this section, as appropriate. Proposal and effective dates are specified in Table 1 to this section.

(1) *Compliance dates for new and reconstructed sources.* (i) The owner or operator of a new or reconstructed affected source that commences construction or reconstruction after the proposal date, and that has an initial startup before the effective date of standards for an affected source, shall comply with this subpart no later than the applicable effective date in Table 1 to § 63.1102 of this section.

(ii) The owner or operator of a new or reconstructed affected source that has an initial startup after the applicable effective date in Table 1 to § 63.1102 of this section shall comply with this subpart upon startup of the source.

(iii) The owner or operator of an affected source that commences construction or reconstruction after the proposal date, but before the effective date in Table 1 to this section, shall comply with this subpart no later than the date 3 years after the effective date if the conditions in paragraphs (a)(1)(iii) (A) and (B) of this section are met.

(A) The promulgated standards are more stringent than the proposed standards.

(B) The owner or operator complies with this subpart as proposed during the 3-year period immediately after the effective date of standards for the affected source.

(2) *Compliance dates for existing sources.* (i) The owner or operator of an existing affected source shall comply with the requirements of this subpart within 3 years after the effective date of standards for the affected source.

(ii) The owner or operator of an area source that increases its emissions of (or its potential to emit) HAP such that the source becomes a major source shall be subject to the relevant standards for existing sources under this subpart. Such sources shall comply with the relevant standards within 3 years of becoming a major source.

(b) [Reserved].

TABLE 1 TO § 63.1102.—SOURCE CATEGORY PROPOSAL AND EFFECTIVE DATES

Source category	Proposal date	Effective date
(a) Acetal Resins Production	October 14, 1998	June 29, 1999.
(b) Acrylic and Modacrylic Fibers Production	October 14, 1998	June 29, 1999.
(c) Hydrogen Fluoride Production	October 14, 1998	June 29, 1999.
(d) Polycarbonate Production	October 14, 1998	June 29, 1999.
(e) Ethylene Production	December 6, 2000	July 12, 2002.
(f) Carbon Black Production	December 6, 2000	July 12, 2002.
(g) Cyanide Chemicals Manufacturing	December 6, 2000	July 12, 2002.
(h) Spandex Production	December 6, 2000	July 12, 2002.

14. Section 63.1103 is amended by adding paragraphs (e) through (h) to read as follows:

§ 63.1103 Source category-specific applicability, definitions, and requirements.

* * * * *

(e) *Ethylene production applicability, definitions, and requirements*—(1) *Applicability*—(i) *Affected source.* For the ethylene production (as defined in paragraph (e)(2) of this section) source category, the affected source shall comprise all emission points listed in paragraphs (e)(1)(i) (A) through (G) of this section that are associated with an ethylene production unit that is located at a major source, as defined in section 112(a) of the Act.

(A) All storage vessels (as defined in § 63.1101) that store liquids containing organic HAP.

(B) All ethylene process vents (as defined in paragraph (e)(2) of this section) from continuous unit operations.

(C) All transfer racks (as defined in paragraph (e)(2) of this section) that load HAP-containing material.

(D) Equipment (as defined in § 63.1101) that contains or contacts organic HAP.

(E) All waste streams (as defined in paragraph (e)(2) of this section) associated with an ethylene production unit.

(F) All heat exchange systems (as defined in paragraph (e)(2) of this section) associated with an ethylene production unit.

(G) All ethylene cracking furnaces and associated decoking operations.

(ii) *Exceptions.* The emission points listed in paragraphs (e)(1)(ii) (A) through (L) of this section are in the ethylene production source category but are not subject to the requirements of paragraph (e)(3) of this section.

(A) Equipment that is located within an ethylene production unit that is subject to this subpart but does not contain organic HAP.

(B) Stormwater from segregated sewers.

(C) Water from fire-fighting and deluge systems in segregated sewers.

(D) Spills.

(E) Water from safety showers.

(F) Water from testing of fire-fighting and deluge systems.

(G) Vessels storing organic liquids that contain organic HAP as impurities.

(H) Transfer racks, loading arms, or loading hoses that only transfer liquids containing organic HAP as impurities.

(I) Transfer racks, loading arms, or loading hoses that vapor balance during all transfer operations.

(J) Air emissions from all ethylene cracking furnaces, including furnace stack emissions during decoking operations.

(K) Pressure vessels designed to operate in excess of 204.9 kilopascals and without emissions to the atmosphere.

(L) Vessels permanently attached to motor vehicles such as trucks, railcars, barges, or ships.

(iii) *Exclusions.* The provisions of this subpart do not apply to process units and emission points subject to subparts F, G, H, I and CC of this part.

(iv) *Compliance schedule.* The compliance schedule for the ethylene production source category is specified in § 63.1102.

(2) *Definitions. Ethylene process vent* means a gas stream with a flow rate greater than 0.005 standard cubic meters

per minute containing greater than 20 parts per million by volume HAP that is continuously discharged during operation of an ethylene production unit, as defined in this section. Ethylene process vents are gas streams that are discharged to the atmosphere (or the point of entry into a control device, if any) either directly or after passing through one or more recovery devices. Ethylene process vents do not include relief valve discharges; gaseous streams routed to a fuel gas system; leaks from equipment regulated under this subpart; episodic or nonroutine releases such as those associated with startup, shutdown, and malfunction; and in situ sampling systems (online analyzers).

Ethylene production or production unit means a chemical manufacturing process unit in which ethylene and/or propylene are produced by separation from petroleum refining process streams or by subjecting hydrocarbons to high temperatures in the presence of steam. The ethylene production unit includes the separation of ethylene and/or propylene from associated streams such as a C_4 product, pyrolysis gasoline, and pyrolysis fuel oil. Ethylene production does not include the manufacture of SOCMI chemicals such as the production of butadiene from the C_4 stream and aromatics from pyrolysis gasoline.

Heat exchange system means any cooling tower system or once-through cooling water system (e.g., river or pond water). A heat exchange system can include an entire recirculating or once-through cooling system.

Transfer rack means the collection of loading arms and loading hoses at a single loading rack that is used to fill tank trucks and/or railcars with organic HAP. Transfer rack includes the associated pumps, meters, shutoff valves, relief valves, and other piping and valves. Transfer rack does not include racks, arms, or hoses that contain organic HAP only as impurities; or racks, arms, or hoses that vapor balance during all loading operations.

Waste means any material resulting from industrial, commercial, mining, or agricultural operations, or from community activities, that is discarded or is being accumulated, stored, or physically, chemically, thermally, or biologically treated prior to being discarded, recycled, or discharged.

Waste stream means the waste generated by a particular process unit, product tank, or waste management unit. The characteristics of the waste stream (e.g., flow rate, HAP concentration, water content) are determined at the point of waste generation. Examples of a waste stream include process wastewater, product tank drawdown, sludge and slop oil removed from waste management units, and landfill leachate.

(3) *Requirements.* The owner or operator must control organic HAP emissions from each affected source emission point by meeting the applicable requirements specified in Table 7 to this section. An owner or operator must perform the applicability assessment procedures and methods for process vents specified in § 63.1104, except for paragraphs (d), (g), (h), (i), (j), (l)(1), and (n). An owner or operator must perform the applicability assessment procedures and methods for equipment leaks specified in § 63.1107. General compliance, recordkeeping, and reporting requirements are specified in §§ 63.1108 through 63.1112. Minimization of emissions from startup, shutdown, and malfunctions must be addressed in the startup, shutdown, and malfunction plan required by § 63.1111; the plan must also establish reporting and recordkeeping of such events. Procedures for approval of alternate means of emission limitations are specified in § 63.1113.

TABLE 7 TO § 63.1103(E).—WHAT ARE MY REQUIREMENTS IF I OWN OR OPERATE AN ETHYLENE PRODUCTION EXISTING OR NEW AFFECTED SOURCE?

If you own or operate . . .	And if . . .	Then you must . . .
(a) A storage vessel (as defined in § 63.1101) that stores liquid containing organic HAP.	(1) The maximum true vapor pressure of total organic HAP is ≥3.4 kilopascals but <76.6 kilopascals; and the capacity of the vessel is ≥4 cubic meters but ≤95 cubic meters.	(i) Fill the vessel through a submerged pipe; or (ii) Comply with the requirements for storage vessels with capacities ≥95 cubic meters.
(b) A storage vessel (as defined in § 63.1101) that stores liquid containing organic HAP.	(1) The maximum true vapor pressure of total organic HAP is ≥3.4 kilopascals but ≥76.6 kilopascals; and the capacity of the vessel is ≥95 cubic meters.	(i) Comply with the requirements of subpart WW of this part; or (ii) Reduce emissions of total organic HAP by 98 weight-percent by venting emissions through a closed vent system to any combination of control devices and meet the requirements of § 63.982(a)(1).
(c) A storage vessel (as defined in § 63.1101) that stores liquid containing organic HAP.	(1) The maximum true vapor pressure of total organic HAP is ≥76.6 kilopascals.	(i) Reduce emissions of total organic HAP by 98 weight-percent by venting emissions through a closed vent system to any combination of control devices and meet the requirements of § 63.982(a)(1).
(d) An ethylene process vent (as defined in paragraph (e)(2) of this section).	(1) The process vent is at an existing source and the vent stream has a flow rate ≥0.011 scmm and a total organic HAP concentration ≥50 parts per million by volume; or the process vent is at a new source and the vent stream has a flow rate ≥0.008 scmm and a total organic HAP concentration ≥30 parts per million by volume.	(i) Reduce emissions of organic HAP by 98 weight-percent; or reduce organic HAP or TOC to a concentration of 20 parts per million by volume; whichever is less stringent, by venting emissions through a closed vent system to any combination of control devices and meet the requirements specified in § 63.982(b) and (c)(2).
(e) A transfer rack (as defined in paragraph (e)(2) of this section).	(1) Materials loaded have a true vapor pressure of total organic HAP ≥3.4 kilopascals and ≥76 cubic meters per day (averaged over any consecutive 30-day period) of HAP-containing material is loaded.	(i) Reduce emissions of organic HAP by 98 weight-percent; or reduce organic HAP or TOC to a concentration of 20 parts per million by volume; whichever is less stringent, by venting emissions through a closed vent system to any combination of control devices as specified in § 63.1105; or

TABLE 7 TO § 63.1103(E).—WHAT ARE MY REQUIREMENTS IF I OWN OR OPERATE AN ETHYLENE PRODUCTION EXISTING OR NEW AFFECTED SOURCE?—Continued

If you own or operate . . .	And if . . .	Then you must . . .
		(ii) Install process piping designed to collect the HAP-containing vapors displaced from tank trucks or railcars during loading and to route it to a process, a fuel gas system, or a vapor balance system, as specified in § 63.1105.
(f) Equipment (as defined in § 63.1101) that contains or contacts organic HAP.	(1) The equipment contains or contacts ≥5 weight-percent organic HAP; and the equipment is not in vacuum service.	Comply with the requirements of subpart UU of this part.
(g) Processes that generate waste (as defined in paragraph (e)(2) of this section).	(1) The wastewater contains any of the following HAP: benzene, cumene, ethyl benzene, hexane, naphthalene, styrene, toluene, o-xylene, m-xylene, p-xylene, or 1,3-butadiene.	(i) Comply with the waste requirements of subpart XX of this part. For ethylene manufacturing process unit waste stream requirements, terms have the meanings specified in subpart XX.
(h) A heat exchange system (as defined in paragraph (e)(2) of this section).	.....	Comply with the heat exchange system requirements of subpart XX of this part.

(f) *Carbon black production applicability, definitions, and requirements*—(1) *Applicability*—(i) *Affected source.* For the carbon black production source category (as defined in paragraph (f)(2) of this section), the affected source shall comprise each carbon black production process unit located at a major source, as defined in section 112(a) of the Act. The affected source for the carbon black production source category includes all waste management units, maintenance wastewater, and equipment components that contain or contact HAP that are associated with the carbon black production process unit.

(ii) *Compliance schedule.* The compliance schedule for the carbon black production and acetylene decomposition carbon black production affected sources, as defined in paragraph (f)(1)(i) of this section, is specified in § 63.1102.

(2) *Definitions. Carbon black production* means the production of carbon black by either the furnace, thermal, acetylene decomposition, or lampblack processes.

Carbon black production unit means the equipment assembled and connected by hard-piping or duct work to process raw materials to manufacture, store, and transport a carbon black product. For the purposes of this subpart, a carbon black production process unit includes reactors and associated operations; associated recovery devices; and any feed, intermediate and product storage vessels, product transfer racks, and connected ducts and piping. A carbon black production process unit includes pumps, compressors, agitators, pressure relief devices, sampling connection systems, open-ended valves or lines, valves, connectors, instrumentation systems, and control devices or systems.

Dryer means a rotary-kiln dryer that is heated externally and is used to dry wet pellets in the wet pelletization process.

Main unit filter means the filter that separates the carbon black from the tailgas.

Process filter means the filter that separates the carbon black from the conveying air.

Purge filter means the filter that separates the carbon black from the dryer exhaust.

(3) *Requirements.* (i) Table 8 to this section specifies the carbon black production standards applicability for existing and new sources. Applicability assessment procedures and methods are specified in § 63.1104. An owner or operator of an affected source is not required to perform applicability tests or other applicability assessment procedures if they opt to comply with the most stringent requirements for an applicable emission point pursuant to this subpart. General compliance, recordkeeping, and reporting requirements are specified in §§ 63.1108 through 63.1112. Procedures for approval of alternative means of emission limitations are specified in § 63.1113.

(ii) Pressure relief devices used to protect against overpressure in the case of catastrophic failure of your process filter system are exempt from the closed vent system inspection requirements of § 63.983(b) and (c). Exempt pressure relief devices must be designated and identified in your Notification of Compliance Status report.

TABLE 8 TO § 63.1103(F).—WHAT ARE MY REQUIREMENTS IF I OWN OR OPERATE A CARBON BLACK PRODUCTION EXISTING OR NEW AFFECTED SOURCE?

If you own or operate . . .	And if . . .	Then you must . . .
(a) A carbon black production main unit filter process vent.	(1) The HAP concentration of the emission stream is equal to or greater than 260 parts per million by volume[a].	(i) Reduce emissions of HAP by using a flare meeting the requirements of subpart SS of this part; or (ii) Reduce emissions of total HAP by 98 weight-percent or to a concentration of 20 parts per million by volume, whichever is less stringent, by venting emissions through a closed vent system to any combination of control devices meeting the requirements of § 63.982(a)(2).

[a] The weight-percent organic HAP is determined according to the procedures specified in § 63.1104(e).

(g) *Cyanide chemicals manufacturing applicability, definitions, and requirements*—(1) *Applicability*—(i) *Affected source.* For the cyanide chemicals manufacturing source category, the affected source shall include each cyanide chemicals manufacturing process unit located at a major source, as defined in section 112(a) of the Act. The affected source shall also include all waste management units, maintenance wastewater, and equipment (as defined in § 63.1101) that contain or contact cyanide chemicals that are associated with the cyanide chemicals manufacturing process unit.

(ii) *Compliance schedule.* The compliance schedule for the affected source, as defined in paragraph (f)(1)(i) of this section, is specified in § 63.1102.

(2) *Definitions. Andrussow process unit* means a process unit that produces hydrogen cyanide by reacting methane and ammonia in the presence of oxygen over a platinum/rhodium catalyst. An Andrussow process unit begins at the point at which the raw materials are stored and ends at the point at which refined hydrogen cyanide is reacted as a raw material in a downstream process, burned on-site as fuel in a boiler or industrial furnace, or is shipped offsite. If raw hydrogen cyanide from the reactor is reacted with sodium hydroxide to form sodium cyanide prior to the refining process, the unit operation where sodium cyanide is formed is considered to be part of the Andrussow process unit.

Blausaure Methane Anlage (BMA) process unit means a process unit that produces hydrogen cyanide by reacting methane and ammonia over a platinum catalyst. A BMA process unit begins at the point at which raw materials are stored and ends at the point at which refined hydrogen cyanide is reacted as a raw material in a downstream process, burned on-site as a fuel in a boiler or industrial furnace, or is shipped offsite. If raw hydrogen cyanide from the reactor is reacted with sodium hydroxide to form sodium cyanide prior to the refining process, the unit operation where sodium cyanide is formed is considered to be part of the BMA process unit.

Byproduct means a chemical that is produced coincidentally during the production of another chemical.

Cyanide chemicals manufacturing process unit or *CCMPU* means the equipment assembled and connected by hard-piping or duct work to process raw materials to manufacture, store, and transport a cyanide chemicals product. A cyanide chemicals manufacturing process unit shall be limited to any one of the following: an Andrussow process unit, a BMA process unit, a sodium cyanide process unit, or a Sohio hydrogen cyanide process unit. For the purpose of this subpart, a cyanide chemicals manufacturing process unit includes reactors and associated unit operations; associated recovery devices; and any feed, intermediate and product storage vessels, product transfer racks, and connected ducts and piping. A cyanide chemicals manufacturing process unit includes pumps, compressors, agitators, pressure relief devices, sampling connection systems, open-ended valves or lines, valves, connectors, instrumentation systems, and control devices or systems.

Cyanide chemicals product means either hydrogen cyanide, potassium cyanide, or sodium cyanide which is manufactured as the intended product of a CCMPU or a byproduct of the Sohio process. Other hydrogen cyanide, potassium cyanide, or sodium cyanide byproducts, impurities, wastes, and trace contaminants are not considered to be cyanide chemicals products.

Dry-end process vent means a process vent originating from the drum filter or any other unit operation in the dry end of a sodium cyanide manufacturing process unit. For the purposes of this subpart, the dry end of the sodium cyanide process unit begins in the unit operation where water is removed from the sodium cyanide, usually in the drum filter, and ends when the sodium cyanide is used as a raw material in a downstream process, or is shipped offsite.

Organic HAP means, for purposes of applicability of the requirements of this subpart, all hydrogen cyanide compounds.

Raw hydrogen cyanide means hydrogen cyanide that has not been through the refining process. Raw hydrogen cyanide usually has a hydrogen cyanide concentration less than 10 percent.

Refined hydrogen cyanide means hydrogen cyanide that has been through the refining process. Refined hydrogen cyanide usually has a hydrogen cyanide concentration greater than 99 percent.

Refining process means the collection of equipment in a cyanide chemicals manufacturing processing unit used to concentrate raw hydrogen cyanide from a concentration around 10 percent or less to refined hydrogen cyanide at a concentration greater than 99 percent.

Sodium cyanide process unit means a process unit that produces sodium cyanide by reacting hydrogen cyanide and sodium hydroxide via the neutralization, or wet, process. A sodium cyanide process unit begins at the unit operation where refined hydrogen cyanide is reacted with sodium hydroxide and ends at the point the solid sodium cyanide product is shipped offsite or used as a raw material in a downstream process. If raw hydrogen cyanide is reacted with sodium hydroxide to form sodium cyanide prior to the hydrogen cyanide refining process, the unit operation where sodium cyanide is formed is not considered to be part of the sodium cyanide process unit. For this type of process, the sodium cyanide process unit begins at the point that the aqueous sodium cyanide stream leaves the unit operation where the sodium cyanide is formed. In situations where potassium hydroxide is substituted for sodium hydroxide to produce potassium cyanide, the process unit is still considered a sodium cyanide process unit.

Sohio hydrogen cyanide process unit means a process unit that produces hydrogen cyanide as a byproduct of the acrylonitrile production process when acrylonitrile is manufactured using the Sohio process. A Sohio hydrogen cyanide process unit begins at the point the hydrogen cyanide leaves the unit operation where the hydrogen cyanide is separated from the acrylonitrile (usually referred to as the heads column). The Sohio hydrogen cyanide process unit ends at the point refined hydrogen cyanide is reacted as a raw material in a downstream process, burned on-site as fuel in a boiler or industrial furnace, or is shipped offsite. If raw hydrogen cyanide is reacted with sodium hydroxide to form sodium cyanide prior to the refining process, the unit operation where sodium cyanide is formed is considered to be part of the Sohio hydrogen cyanide process unit.

Wet-end process vent means a process vent originating from the reactor, crystallizer, or any other unit operation in the wet end of the sodium cyanide process unit. For the purposes of this subpart, the wet end of the sodium cyanide process unit begins at the point at which the raw materials are stored and ends just prior to the unit operation where water is removed from the sodium cyanide, usually in the drum filter. Wastewater streams containing discarded wastewater from the sodium cyanide production process are not considered to be part of the wet-end sodium cyanide process. Discarded wastewater that is no longer used in the production process is considered to be process and/or maintenance wastewater. Vents from process and maintenance wastewater operations are not wet-end process vents.

(3) *Requirements.* Table 9 to this section specifies the cyanide chemicals

manufacturing standards applicable to existing and new sources. Applicability assessment procedures and methods are specified in § 63.1104. An owner or operator of an affected source is not required to perform applicability tests or other applicability assessment procedures if they opt to comply with the most stringent requirements for an applicable emission point pursuant to this subpart. General compliance, recordkeeping, and reporting requirements are specified in §§ 63.1108 through 63.1112. Procedures for approval of alternative means of emission limitations are specified in § 63.1113.

(4) *Determination of overall HAP emission reduction for a process unit.* (i) The owner or operator shall determine the overall HAP emission reduction for process vents in a process unit using Equation 1 of this section. The overall organic HAP emission reduction shall be determined for all process vents in the process unit.

$$RED_{CCMPU} = \left(\frac{\sum_{i=1}^{n} \left(E_{unc,i}\right)\left(\frac{R_i}{100}\right)}{\sum_{i=1}^{n} \left(E_{unc,i}\right) + \sum_{j=1}^{m} \left(E_{unc,j}\right)} \right) * 100 \qquad \text{[Equation 1]}$$

Where:

RED_{CCMPU}=Overall HAP emission reduction for the group of process vents in the CCMPU, percent.

E_{unc},i=Uncontrolled HAP emissions from process vent i that is controlled by using a combustion, recovery, or recapture device, kg/yr.

n=Number of process vents in the process unit that are controlled by using a combustion, recovery, or recapture device.

R_i=Control efficiency of the combustion, recovery, or recapture device used to control HAP emissions from vent i, determined in accordance with paragraph (g)(4)(ii) of this section.

E_{unc},j=Uncontrolled HAP emissions from process vent j that is not controlled by using a combustion, recovery, or recapture device, kg/yr.

m=Number of process vents in the process unit that are not controlled by using a combustion, recovery, or recapture device.

(ii) The control efficiency shall be assigned as specified in paragraph (g)(4)(ii) (A) or (B) of this section.

(A) If the process vent is controlled using a flare in accordance with the provisions of § 63.987, or a combustion device in accordance with the provisions of § 63.988(b)(2), for which a performance test has not been conducted, the control efficiency shall be assumed to be 98 weight-percent. For hydrogen-fueled flares, an owner or operator may use a control efficiency greater than 98 weight-percent if they can provide engineering calculations and supporting information demonstrating a greater control efficiency.

(B) If the process vent is controlled using a combustion, recovery, or recapture device for which a performance test has been conducted in accordance with the provisions of § 63.997, the control efficiency shall be the efficiency determined by the performance test.

(5) *Source category specific modifications to testing procedures.* (i) When identifying equipment subject to any equipment leak requirements, an owner or operator is allowed to designate specific components of such equipment as never being safe to monitor with their Notification of Compliance Status report and periodic compliance reports. In order for an owner or operator to designate such equipment as never being safe to monitor, they must certify that monitoring such equipment at any time the CCMPU is operating is never safe (e.g., monitoring this equipment would present an unreasonable hazard or preclude testing personnel from meeting emergency evacuation requirements). If it is demonstrated to the Administrator's satisfaction that equipment designated by the owner or operator as never safe to monitor is appropriately designated, an owner or operator will not be required to monitor such equipment.

(ii) For process vent hydrogen cyanide emissions that are vented to a control device other than a flare during startup, shutdown, and malfunction, the design evaluation must include documentation that the control device being used achieves the required control efficiency during the reasonably expected maximum flow rate and emission rate during startup, shutdown, and malfunction.

(iii) If a facility controls process vent emissions during startup, shutdown, and malfunction by using a flare, an owner or operator is not required to perform flow rate and heat content testing as specified in § 63.987(b)(3)(ii) and (iii). In lieu of performing flow rate and heat content testing, an owner or operator is required to submit engineering calculations that substantiate that a flare meets the applicable heat content or flow rates, or provide data from a compliance assessment that the flare is in compliance under worst case conditions (e.g., maximum operating conditions).

(iv) If flare velocity and net heating value testing, as specified in § 63.11(b)(6)(ii) and (b)(7)(i), would create an unreasonable hazard for testing personnel, an owner or operator is allowed to submit engineering calculations that substantiate vent stream velocity and heat content of a flare in lieu of test data. These calculations are required to be submitted with the facilities' compliance test notification report for approval by the Administrator.

(v) The data from any performance test method used to measure HCN concentrations must be validated using EPA Method 301 (40 CFR part 63, appendix A).

TABLE 9 TO § 63.1103(G).—WHAT ARE MY REQUIREMENTS IF I OWN OR OPERATE A CYANIDE CHEMICALS MANUFACTURING EXISTING OR NEW AFFECTED SOURCE?

If you own or operate . . .	And if . . .	Then you must . . .
(a) A storage vessel	(1) The storage vessel contains refined hydrogen cyanide.	(i) Reduce emissions of hydrogen cyanide by using a flare meeting the requirements of § 63.982(b); or (ii) Reduce emissions of hydrogen cyanide by 98 weight-percent, or to a concentration of 20 parts per million by volume, by venting emissions through a closed vent system to any combination of control devices meeting the requirements of § 63.982(c)(1) or (d).
(b) A process vent from a continuous unit operations in an Andrussow, BMA, or Sohio hydrogen cyanide process unit.		(i) Reduce overall annual emissions of total HAP from the collection of process vents from continuous unit operations in the process by 98 weight-percent in accordance with paragraph (g)(4) of this section. Any control device used to reduce emissions from one or more process vents from continuous unit operations in the process unit must meet the applicable requirements specified in § 63.982(a)(2); or (ii) Reduce emissions of total HAP from each process vent from a continuous unit operation in the process unit by using a flare meeting the requirements specified in § 63.982(b); or (iii) Reduce emissions of total HAP from each process vent from a continuous unit operation in the process unit by 98 weight-percent or to a concentration of 20 parts per million by volume, by venting emissions through a closed vent system to any combination of control devices meeting the requirements of § 63.982(c)(2) or (d).
(c) One or more wet end process vents, as defined in paragraph (g)(2) of this section, in a sodium cyanide process unit.		(i) Reduce overall annual emissions of total HAP from the collection of process vents from continuous unit operations in the process unit by 98 weight-percent in accordance with paragraph (g)(4) of this section. Any control device used to reduce emissions from one or more process vents from continuous unit operations in the process unit must meet the applicable requirements of § 63.982(a)(2); or (ii) Reduce emissions of total HAP from each wet-end process vent in the process unit by using a flare meeting the requirements of § 63.982(b); or (iii) Reduce emissions of total HAP from each wet-end process vent by 98 weight-percent, or to a concentration of 20 parts per million by volume, by venting emissions through a closed vent system and any combination of control devices meeting the requirements of § 63.982(c)(2) or (d).
(d) One or more dry end process vents, as defined in paragraph (g)(2) of this section, in a sodium cyanide process unit.		(i) Reduce overall annual emissions of sodium cyanide from the collection of process vents from continuous unit operations in the process unit by 98 weight-percent in accordance with paragraph (g)(4) of this section. Any control device used to reduce emissions from one or more process vents from continuous unit operations in the process unit must meet the applicable requirements of § 63.982(a)(2); or (ii) Reduce emissions of sodium cyanide from each dry-end process vent in the process unit by 98 weight-percent by venting emissions through a closed vent system to any combination of control devices meeting the requirements of § 63.982(c)(2) or (d).

TABLE 9 TO § 63.1103(G).—WHAT ARE MY REQUIREMENTS IF I OWN OR OPERATE A CYANIDE CHEMICALS MANUFACTURING EXISTING OR NEW AFFECTED SOURCE?—Continued

If you own or operate . . .	And if . . .	Then you must . . .
(e) A transfer rack	(1) The transfer rack is used to load refined hydrogen cyanide into tank trucks and/or rail cars.	(i) Reduce emissions of hydrogen cyanide by using a flare meeting the requirements of § 63.982(b); or (ii) Reduce emissions of hydrogen cyanide by 98 weight-percent, or to a concentration of 20 parts per million by volume, whichever is less stringent, by venting emissions through a closed vent system to any combination of control devices meeting the requirements specified in § 63.982(c)(1), (c)(2), or (d).
(f) A new cyanide chemicals manufacturing process unit that generates process wastewater.	(1) The process wastewater is from HCN purification, ammonia purification, or flare blowdown.	(i) Achieve a combined removal and control of HAP from wastewater of 93 weight-percent.
(g) A cyanide chemicals manufacturing process unit that generates maintenance wastewater.	(1) The maintenance wastewater contains hydrogen cyanide or acetonitrile.	(i) Comply with the requirements of § 63.1106(b).
(h) An item of equipment listed in § 63.1106(c)(1) that transports or contains wastewater liquid streams from a cyanide chemicals manufacturing process unit.	(1) The item of equipment meets the criteria specified in § 63.1106(c)(1) through (3) and either (c)(4)(i) or (ii).	(i) Comply with the requirements in Table 35 of subpart G of this part.
(i) Equipment, as defined under § 63.1101	(1) The equipment contains or contacts hydrogen cyanide and operates equal to or greater then 300 hours per year.	(i) Comply with either subpart TT or UU of this part, and paragraph (g)(5) of this section, with the exception that open-ended lines that contain or contact hydrogen cyanide are exempt from any requirements to install a cap, plug, blind flange, or second valve to be capped.

(h) *Spandex production applicability, definitions, and requirements*—(1) *Applicability*—(i) *Affected source.* For the spandex production (as defined in paragraph (h)(2) of this section) source category, the affected source shall comprise all emission points listed in paragraphs (h)(1)(i)(A) through (C) of this section that are associated with a reaction spinning spandex production process unit located at a major source, as defined in section 112(a) of the Act.

(A) All process vents (as defined in § 63.1101).

(B) All storage vessels (as defined in § 63.1101) that store liquids containing organic HAP.

(C) All spandex fiber spinning lines using a spinning solution having organic HAP.

(ii) *Exceptions.* The emission points listed in paragraphs (h)(1)(ii)(A) and (B) of this section are in the spandex production source category but are not subject to the requirements of paragraph (h)(3) of this section.

(A) Equipment that is located within a spandex production process unit that is subject to this subpart but does not contain organic HAP.

(B) Vessels storing organic liquids that contain organic HAP as impurities.

(iii) *Compliance schedule.* The compliance schedule for affected sources, as defined in paragraph (h)(1)(i) of this section, is specified in paragraph (b) of § 63.1102.

(2) *Definitions. Fiber spinning line* means the group of equipment and process vents associated with spandex fiber spinning operations. The fiber spinning line includes the blending and dissolving tanks, spinning solution filters, spinning units, spin bath tanks, and the equipment used downstream of the spin bath to wash, draw, or dry on the wet belt the spun fiber.

Spandex or spandex fiber means a manufactured synthetic fiber in which the fiber-forming substance is a long-chain polymer comprised of at least 85 percent by mass of a segmented polyurethane.

Spandex production means the production of synthetic spandex fibers.

Spandex production process unit means a process unit that is specifically used for the production of synthetic spandex fibers.

(3) *Requirements.* Table 10 to this section specifies the spandex production source category requirements for new and existing sources. An owner or operator must perform the applicability assessment procedures and methods for process vents specified in § 63.1104, excluding paragraphs (b)(1), (d), (g), (h), (i), (j), (l)(1), and (n). General compliance, recordkeeping, and reporting requirements are specified in §§ 63.1108 through 63.1112. Minimization of emissions from startup, shutdown, and malfunctions must be addressed in the startup, shutdown, and malfunction plan required by § 63.1111; the plan must also establish reporting and recordkeeping of such events. Procedures for approval of alternate means of emission limitations are specified in § 63.1113.

TABLE 10 TO § 63.1103(H)—WHAT ARE MY REQUIREMENTS IF I OWN OR OPERATE A SPANDEX PRODUCTION PROCESS UNIT AT A NEW OR EXISTING SOURCE?

If you own or operate . . .	And if . . .	Then you must . . .
(a) A storage vessel (as defined in § 63.1101) that stores liquid containing organic HAP.	(1) The maximum true vapor pressure of the organic HAP is ≥ 3.4 kilopascals; and the capacity of the vessel is ≥ 47 cubic meters.	(i) Comply with the requirements of subpart WW of this part; or (ii) Reduce emissions of organic HAP by 95 weight-percent by venting emissions in through a closed vent system to any combination of control devices meeting the requirements of subpart SS of this part, as specified in § 63.982(a)(1).
(b) A process vent		Reduce emissions of organic HAP by 95 weight-percent, or reduce organic HAP or TOC to a concentration of 20 parts per million by volume, whichever is less stringent, by venting emissions through a closed vent system to any combination of control devices meeting the requirements of § 63.982(a)(2).
(c) A fiber spinning line		Operate the fiber spinning line such that emissions are captured and vented through a line closed vent system to a control device that complies with the requirements of § 63.982(a)(2). If a control device other than a flare is used, HAP emissions must be reduced by 95 weight-percent, or total organic HAP or TOC must be reduced to a concentration of 20 parts per million by volume, whichever is less stringent.

15. Section 63.1104 is amended by:

a. Revising the last sentence of paragraph (a);

b. Revising the first sentence of paragraph (e) introductory text;

c. Revising the first sentence of paragraph (f)(1);

d. Revising the last sentence of paragraph (k) introductory text; and

e. Revising the first sentence of paragraph (m)(2)(i) introductory text.

The revisions are to read as follows:

§ 63.1104 Process vents from continuous unit operations: applicability assessment procedures and methods.

(a) * * * The owner or operator of a process vent is not required to determine the criteria specified for a process vent that is being controlled (including control by flare) in accordance with the applicable weight-percent, TOC concentration, or organic HAP concentration requirement in § 63.1103.

* * * * *

(e) *TOC or Organic HAP concentration.* The TOC or organic HAP concentrations shall be determined based on paragraph (e)(1), (e)(2), or (k) of this section, or any other method or data that have been validated according to the protocol in Method 301 of appendix A of 40 CFR part 63. * * *

* * * * *

(f) * * *

(1) Use Method 2, 2A, 2C, 2D, 2F, or 2G of 40 CFR part 60, appendix A, as appropriate. * * *

* * * * *

(k) * * * If a process vent flow rate or process vent organic HAP or TOC concentration is being determined for comparison with the applicable flow rate or concentration value presented in the tables in § 63.1103 to determine control requirement applicability, engineering assessment may be used to determine the flow rate or concentration for the representative operating conditions expected to yield the highest flow rate or concentration.

* * * * *

(m) * * *

(2) *Process change.* (i) Whenever a process vent becomes subject to control requirements under this subpart as a result of a process change, the owner or operator shall submit a report within 60 days after the performance test or applicability assessment, whichever is sooner. * * *

* * * * *

16. Add § 63.1105 to read as follows:

§ 63.1105 Transfer racks.

(a) *Design requirements.* The owner or operator shall equip each transfer rack with one of the control options listed in paragraphs (a)(1) through (4) of this section.

(1) A closed vent system designed to collect HAP-containing vapors displaced from tank trucks or railcars during loading and to route the collected vapors to a flare. The owner or operator must meet the requirements of § 63.982(a)(3).

(2) A closed vent system designed to collect HAP-containing vapors displaced from tank trucks or railcars during loading and to route the collected vapors to a control device other than a flare. The owner or operator must meet the requirements of § 63.982(a)(3).

(3) Process piping designed to collect the HAP vapors displaced from tank trucks or railcars during loading and to route the collected vapors to a process where the HAP vapors shall predominantly meet one of, or a combination of, the ends specified in paragraphs (a)(3)(i) through (iv) of this section or to a fuel gas system. The owner or operator must meet the requirements of § 63.982(a)(3).

(i) Recycled and/or consumed in the same manner as a material that fulfills the same function in that process;

(ii) Transformed by chemical reaction into materials that are not HAP;

(iii) Incorporated into a product; and/or

(iv) Recovered.

(4) Process piping designed to collect the HAP vapors displaced from tank trucks or railcars during loading and to route the collected vapors to a vapor balance system. The vapor balance system must be designed to route the

collected HAP vapors to the storage vessel from which the liquid being loaded originated, or to another storage vessel connected to a common header, or to compress and route collected HAP vapors to a process.

(b) *Operating requirements.* An owner or operator of a transfer rack shall operate it in such a manner that emissions are routed through the equipment specified in paragraph (a) of this section.

(c) *Control device operation.* Whenever HAP emissions are vented to a control device used to comply with the provisions of this subpart, such control device shall be operating.

(d) *Tank trucks and railcars.* The owner or operator shall load HAP-containing materials only into tank trucks and railcars that meet the requirement in paragraph (d)(1) or (2) of this section and shall maintain the records specified in paragraph (i) of this section.

(1) Have a current certification in accordance with the U.S. Department of Transportation (DOT) pressure test requirements of 49 CFR part 180 for tank trucks and 49 CFR 173.31 for railcars; or

(2) Have been demonstrated to be vapor-tight within the preceding 12 months as determined by the procedures in paragraph (h) of this section. Vapor-tight means that the pressure in a truck or railcar tank will not drop more than 750 pascals within 5 minutes after it is pressurized to a minimum of 4,500 pascals.

(e) *Pressure relief device.* The owner or operator of a transfer rack subject to the provisions of this subpart shall ensure that no pressure relief device in the loading equipment of each tank truck or railcar shall begin to open to the atmosphere during loading. Pressure relief devices needed for safety purposes are not subject to the requirements of this paragraph.

(f) *Compatible system.* The owner or operator of a transfer rack subject to the provisions of this subpart shall load HAP-containing materials only to tank trucks or railcars equipped with a vapor collection system that is compatible with the transfer rack's closed vent system or process piping.

(g) *Loading while systems connected.* The owner or operator of a transfer rack subject to this subpart shall load HAP-containing material only to tank trucks or railcars whose collection systems are connected to the transfer rack's closed vent system or process piping.

(h) *Vapor tightness procedures.* For the purposes of demonstrating vapor tightness to determine compliance with paragraph (d)(2) of this section, the procedures and equipment specified in paragraphs (h)(1) and (2) shall be used.

(1) The pressure test procedures specified in Method 27 of appendix A to 40 CFR part 60.

(2) A pressure measurement device that has a precision of ± 2.5 millimeters of mercury or better and that is capable of measuring above the pressure at which the tank truck or railcar is to be tested for vapor tightness.

(i) *Recordkeeping.* The owner or operator of a transfer rack shall record that the verification of DOT tank certification or Method 27 of appendix A to 40 CFR part 60 testing required in § 63.84(c) has been performed. Various methods for the record of verification can be used, such as a check-off on a log sheet, a list of DOT serial numbers or Method 27 data, or a position description for gate security showing that the security guard will not allow any trucks on-site that do not have the appropriate documentation.

17. Subpart YY is amended by adding § 63.1114 to read as follows:

§ 63.1114 Implementation and enforcement.

(a) This subpart can be implemented and enforced by the U.S. Environmental Protection Agency (EPA), or a delegated authority such as the applicable State, local, or tribal agency. If the EPA Administrator has delegated authority to a State, local, or tribal agency, then that agency has the authority to implement and enforce this subpart. Contact the applicable EPA Regional Office to find out if this subpart is delegated to a State, local, or tribal agency.

(b) In delegating implementation and enforcement authority of this subpart to a State, local, or tribal agency under 40 CFR part 63, subpart E, the authorities contained in paragraphs (b)(1) through (5) of this section are retained by the EPA Administrator and are not transferred to the State, local, or tribal agency.

(1) Approval of alternatives to the nonopacity emissions standards in § 63.1103(a)(3), (b)(3) through (5), (c)(3), (d)(3), (e)(3), (f)(3), (g)(3) and (4), and (h)(3) under § 63.6(g). Follow the requirements in § 63.1113 to request permission to use an alternative means of emission limitation. Where these standards reference another subpart, the cited provisions will be delegated according to the delegation provisions of the referenced subpart.

(2) [Reserved]

(3) Approval of major changes to test methods under § 63.7(e)(2)(ii) and (f) and as defined in § 63.90.

(4) Approval of major changes to monitoring under § 63.8(f) and as defined in § 63.90.

(5) Approval of major changes to recordkeeping and reporting under § 63.10(f) and as defined in § 63.90.

[FR Doc. 02–12841 Filed 7–11–02; 8:45 am]

BILLING CODE 6560–50–P

ENVIRONMENTAL PROTECTION AGENCY

40 CFR Part 63

[FRL–7215–8]

RIN 2060–AH68

National Emission Standards for Hazardous Air Pollutants: Generic Maximum Achievable Control Technology

AGENCY: Environmental Protection Agency (EPA).

ACTION: Direct final rule; amendments.

SUMMARY: The EPA is taking direct final action to amend the ''generic'' maximum achievable control technology (MACT) standards to clarify the agency's intent concerning dry spinning spandex production processes. The national emission standards for hazardous air pollutants (NESHAP) for the Spandex Production source category, along with the NESHAP for three other source categories, are being included in the Generic MACT rule in this issue of the **Federal Register**.

DATES: The direct final rule will be effective on September 25, 2002 without further notice, unless significant adverse comments are received by August 12, 2002, or by August 26, 2002 if a public hearing is requested. See the proposed rule in this issue of the **Federal Register** for information on the hearing. If we receive timely adverse comments, we will withdraw this direct final rule and take final action pursuant to the proposed rule.

ADDRESSES: *Comments.* By U.S. Postal Service, send comments (in duplicate, if possible) to: Air and Radiation Docket and Information Center (6102), Attention Docket Number A–98–25, U.S. EPA, 1200 Pennsylvania Avenue, NW., Washington, DC 20460. In person or by courier, deliver comments (in duplicate if possible) to: Air and Radiation Docket and Information Center (6102), Attention Docket Number A–98–25, U.S. EPA, 401 M Street, SW., Washington DC 20460. The EPA requests that a separate copy of each public comment be sent to the contact person listed below (*see* **FOR FURTHER INFORMATION CONTACT**). Comments may

also be submitted electronically by following the instructions provided in **SUPPLEMENTARY INFORMATION.**

Docket. Docket No. A–98–25 contains supporting information used in developing the NESHAP. The docket is located at the U.S. EPA, 401 M Street, SW., Washington, DC 20460 in Room M–1500, Waterside Mall (ground floor), and may be inspected from 8 a.m. to 5:30 p.m., Monday through Friday, excluding legal holidays.

FOR FURTHER INFORMATION CONTACT: Ms. Elaine Manning, Waste and Chemical Processes Group, Emission Standards Division (Mailcode C43903), U.S. EPA, Research Triangle Park, North Carolina 27711, telephone number (919) 541–5499, electronic mail (e-mail) address: *manning.elaine@epa.gov.*

SUPPLEMENTARY INFORMATION:

Comments. Comments and data may be submitted by e-mail to: a-and-r-docket@epa.gov. Electronic comments must be submitted as an ASCII file to avoid the use of special characters and encryption problems and will also be accepted on disks in WordPerfect file format. All comments and data submitted in electronic form must note the docket number A–98–25. No confidential business information (CBI) should be submitted by e-mail. Electronic comments may be filed online at many Federal Depository Libraries.

Commenters wishing to submit proprietary information for consideration must clearly distinguish such information from other comments and clearly label it as CBI. Send submissions containing such proprietary information directly to the following address, and not to the public docket, to ensure that proprietary information is not inadvertently placed in the docket: Attention: Ms. Elaine Manning, c/o OAQPS Document Control Officer (Mailcode C404–02), U.S. EPA, Research Triangle Park, NC 27711. The EPA will disclose information identified as CBI only to the extent allowed by the procedures set forth in 40 CFR part 2. If no claim of confidentiality accompanies a submission when it is received by EPA, the information may be made available to the public without further notice to the commenter.

Docket. The docket is an organized and complete file of the administrative record compiled by EPA in the development of this rulemaking. The docket is a dynamic file because material is added throughout the rulemaking process. The docketing system is intended to allow members of the public and industries involved to readily identify and locate documents so that they can effectively participate in the rulemaking process. Along with the proposed and promulgated standards and their preambles, the contents of the docket will serve as the record in the case of judicial review. (See section 307(d)(7)(A) of the Clean Air Act (CAA).) The regulatory text and other materials related to this rulemaking are available for review in the docket or copies may be mailed on request from the Air Docket by calling (202) 260–7548. A reasonable fee may be charged for copying docket materials.

Worldwide Web (WWW). In addition to being available in the docket, an electronic copy of this action will also be available through the WWW. Following signature, a copy of this action will be posted on the EPA's Technology Transfer Network (TTN) policy and guidance page for newly proposed or promulgated rules: *http://www.epa.gov/ttn/oarpg.* The TTN at EPA's web site provides information and technology exchange in various areas of air pollution control. If more information regarding the TTN is needed, call the TTN HELP line at (919) 541–5384.

Regulated Entities. The regulated category and entities affected by this action include:

Category	NAICS codes	SIC codes	Examples of regulated entities
Industry	325222	2824	Producers of spandex.

This table is not intended to be exhaustive, but rather provides a guide for readers likely to be interested in the revisions to the regulation affected by this action. To determine whether your facility, company, business, organization, etc., is regulated by this action, you should carefully examine all of the applicability criteria in § 63.1104 of the rule. If you have questions regarding the applicability of these amendments to a particular entity, consult the person listed in the preceding **FOR FURTHER INFORMATION CONTACT** section.

Judicial Review. Under section 307(b)(1) of the CAA, judicial review of this direct final rule is available only by filing a petition for review in the U.S. Court of Appeals for the District of Columbia by September 10, 2002. Under section 307(d)(7)(B) of the CAA, only an objection to this direct final rule that was raised with reasonable specificity during the period for public comment can be raised during judicial review.

Outline. The information presented in this preamble is organized as follows:

I. Why are we publishing these amendments as a direct final rule?
II. What amendments are we making to the NESHAP for spandex production?
III. What are the administrative requirements?
A. Executive Order 12866, Regulatory Planning and Review
B. Executive Order 13132, Federalism
C. Executive Order 13175, Consultation and Coordination with Indian Tribal Governments
D. Executive Order 13045, Protection of Children for Environmental Health Risks and Safety Risks
E. Unfunded Mandates Reform Act of 1995
F. Regulatory Flexibility Act (RFA), as Amended by the Small Business Regulatory Enforcement Fairness Act of 1996 (SBREFA), 5 U.S.C. 601 *et seq.*
G. Paperwork Reduction Act
H. National Technology Transfer and Advancement Act
I. Congressional Review Act
J. Executive Order 13211, Actions Concerning Regulations That Significantly Affect Energy Supply, Distribution, or Use

I. Why Are We Publishing These Amendments as a Direct Final Rule?

The EPA received several comments on the proposed standards for spandex production. One commenter was concerned that because the dry spinning spandex production process was not mentioned in the proposal, an interpretation could be made that EPA failed to make any decision concerning a MACT standard for this group of sources, and as a result these facilities would be subject to a case-by-case MACT determination under CAA section 112(j). Prior to proposal, we evaluated HAP emissions from dry spinning spandex production and determined that adoption of MACT standards requiring additional emissions reductions for these facilities is not necessary or appropriate. Our

silence concerning these facilities in the proposal was intended to reflect this conclusion.

However, we agree with the commenter that our silence in the proposal regarding the dry spinning production process might be interpreted as a failure to specifically address the need for standards governing emissions of hazardous air pollutants (HAP) from these facilities and, thereby, trigger the case-by-case determinations required by the ''hammer'' provision in CAA section 112(j). Since we did not explicitly state our decision not to adopt any standards for these sources or describe our rationale for that decision in the proposed rule, we have determined that we should supplement our proposal. However, since we do not expect our decision that no MACT standards are necessary for spandex dry spinning facilities to be controversial, and we do not anticipate any adverse comments concerning our decision, we have determined that it is appropriate to effectuate this decision through a direct final rule. This assures that any ambiguity which might otherwise exist concerning our intention to adopt MACT requirements for these facilities will be resolved in a timely manner.

If any adverse comment is received concerning our decision not to adopt MACT standards for spandex dry spinning facilities, we will withdraw this direct final rule. In the ''Proposed Rules'' section of this issue of the **Federal Register**, we are publishing a separate document that will serve as the proposal for our decision not to adopt MACT standards for these facilities in the event we receive any adverse comment. In that case, EPA will publish a timely withdrawal notice before the effective date of this direct final rule and will take final action concerning the proposal after considering the comments received.

II. What Amendments Are We Making to the NESHAP for Spandex Production?

During the rule development, we investigated emissions from dry spinning spandex production processes (comparing the emissions to the reaction spinning process) and made the following findings.

While dry and reaction spinning processes have many similarities, there are significant differences in HAP emissions and controls between the processes. The dry and reaction spinning processes are similar in their use of reactants and process chemistry. Both processes involve the same basic process steps, including production of prepolymer, production of polymer, extrusion of fibers, and drying of fibers. However, a major process difference that affects the amount of HAP emissions from the dry spinning process is the type of solvent used in the production. In the dry spinning production process, non-HAP solvents are used as opposed to HAP-containing solvents used in the reaction spinning process. The estimated total HAP from the three dry spinning production facilities is approximately 4.1 megagrams per year (mg/yr) (4.5 tons per year (tpy)) whereas the two reaction spinning processes emit 303 mg/yr (334 tpy).

Although the dry spinning production process does not use HAP solvents, small amounts of organic HAP are used and generated. The HAP that is produced in the dry spinning process is formaldehyde. Formaldehyde is generated as a byproduct of heating the dimethyl acetamide in the spin cells and is emitted from the process vent along with the non-HAP solvent. None of the existing dry spinning production facilities have controls in place for formaldehyde emissions. Therefore, the floor for dry spinning production process vents is no control. A beyond-the-floor analysis (development of a regulatory option and analysis of the costs associated with the option) was performed on the HAP emissions from the dry spinning production process. The flow rates for process vent streams from the dry spinning production process are large and the concentration of formaldehyde is low. The total annual cost to control these emissions would be approximately $49 million per year, or $12 million per ton of formaldehyde controlled. This is an unreasonable cost to go beyond the floor. Controlling this stream would also use significant amounts of energy. We do not know of a way to change the process or the feeds to reduce the HAP emissions. We have, therefore, decided not to select the beyond-the-floor regulatory option.

The other source of HAP emissions from dry spinning production sources is methylene diphenyl diisocyanate (MDI) storage. The MDI is one of the raw materials used in the spandex production process and has a very low volatility. Thus, we would expect emissions of MDI from the storage tanks to also be very low, perhaps even undetectable. All MDI storage tanks at dry spinning spandex production facilities are fixed-roof tanks. Additionally, one facility has carbon canisters on the vents from the MDI storage tanks (although the control efficiency of the canisters cannot be determined). We estimate that the combined annual MDI emissions from the storage tanks at all three dry spinning facilities do not exceed 500 pounds. We do not believe that requiring additional controls on these storage tanks would yield any meaningful emission reductions. This conclusion is corroborated by our determination that all of the MDI storage tanks at dry spinning production facilities are below the size and vapor pressure requirements for control under all existing MACT standards.

Based on the above analysis, we have concluded that the MACT floor for spandex dry spinning facilities is no control and that adoption of additional emission controls is not warranted. Therefore, we determined that it is not necessary or appropriate to promulgate any MACT requirements for these facilities.

III. What Are the Administrative Requirements?

A. Executive Order 12866, Regulatory Planning and Review

Under Executive Order 12866 (58 FR 51735, October 4, 1993), EPA must determine whether the regulatory action is ''significant'' and, therefore, subject to OMB review and the requirements of the Executive Order. The Executive Order defines ''significant regulatory action'' as one that is likely to result in a rule that may:

(1) Have an annual effect on the economy of $100 million or more or adversely affect in a material way the economy, a sector of the economy, productivity, competition, jobs, the environment, public health or safety, or State, local, or tribal governments or communities;

(2) create a serious inconsistency or otherwise interfere with an action taken or planned by another agency;

(3) materially alter the budgetary impact of entitlements, grants, user fees, or loan programs, or the rights and obligations of recipients thereof; or

(4) raise novel legal or policy issues arising out of legal mandates, the President's priorities, or the principles set forth in the Executive Order.

Pursuant to the terms of Executive Order 12866, it has been determined that these amendments do not constitute a ''significant regulatory action'' because they do not meet any of the above criteria. Consequently, this action was not submitted to OMB for review under Executive Order 12866.

B. Executive Order 13132, Federalism

Executive Order 13132 (64 FR 43255, August 10, 1999) requires EPA to develop an accountable process to

ensure ''meaningful and timely input by State and local officials in the development of regulatory policies that have federalism implications.'' ''Policies that have federalism implications'' is defined in the Executive Order to include regulations that have ''substantial direct effects on the States, on the relationship between the national government and the States, or on the distribution of power and responsibilities among the various levels of government.''

These rule amendments do not have federalism implications. They will not have substantial direct effects on the States, on the relationship between the national government and the States, or on the distribution of power and responsibilities among the various levels of government, as specified in Executive Order 13132, because State and local governments do not own or operate any sources that would be subject to these amendments. Thus, the requirements of section 6 of the Executive Order do not apply.

C. Executive Order 13175, Consultation and Coordination with Indian Tribal Governments

Executive Order 13175, entitled ''Consultation and Coordination with Indian Tribal Governments'' (65 FR 67249, November 6, 2000), requires EPA to develop an accountable process to ensure ''meaningful and timely input by tribal officals in the development of regulatory policies that have tribal implications.'' ''Policies that have tribal implications'' are defined in the Executive Order to include regulations that have ''substantial direct effects on one or more Indian tribes, on the relationship between the Federal government and the Indian tribes, or on the distribution of power and responsibilities between the Federal government and Indian tribes.''

These rule amendments do not have tribal implications. They will not have substantial direct effects on tribal governments, or on the relationship between the Federal government and Indian tribes, or on the distribution of power and responsibilities between the Federal government and Indian tribes, as specified in Executive Order 13175. No tribal governments own or operate spandex production facilities. Thus, Executive Order 13175 does not apply to these rule amendments.

D. Executive Order 13045, Protection of Children from Environmental Health Risks and Safety Risks

Executive Order 13045 (62 FR 19885, April 23, 1997) applies to any rule that: (1) is determined to be ''economically significant'' as defined under Executive Order 12866, and (2) concerns an environmental health or safety risk that EPA has reason to believe may have a disproportionate effect on children. If the regulatory action meets both criteria, EPA must evaluate the environmental health or safety effects of the planned rule on children, and explain why the planned regulation is preferable to other potentially effective and reasonably feasible alternatives considered by EPA.

The EPA interprets Executive Order 13045 as applying only to those regulatory actions that are based on health or safety risks, such that the analysis required under section 5–501 of the Executive Order has the potential to influence the regulation. These rule amendments are not subject to Executive Order 13045 because they are based on technology performance, not health or safety risks. Furthermore, these rule amendments have been determined not to be ''economically significant'' as defined under Executive Order 12866.

E. Unfunded Mandates Reform Act of 1995

Title II of the Unfunded Mandates Reform Act of 1995 (UMRA), Public Law 104–4, establishes requirements for Federal agencies to assess the effects of their regulatory actions on State, local, and tribal governments and the private sector. Under section 202 of the UMRA, EPA generally must prepare a written statement, including a cost-benefit analysis, for proposed and final rules with ''Federal mandates'' that may result in expenditures by State, local, and tribal governments, in aggregate, or by the private sector, of $100 million or more in any 1 year. Before promulgating an EPA rule for which a written statement is needed, section 205 of the UMRA generally requires EPA to identify and consider a reasonable number of regulatory alternatives and adopt the least-costly, most cost-effective, or least burdensome alternative that achieves the objectives of the rule. The provisions of section 205 do not apply when they are inconsistent with applicable law. Moreover, section 205 allows EPA to adopt an alternative other than the least-costly, most cost-effective, or least-burdensome alternative if the Administrator publishes with the final rule an explanation why that alternative was not adopted. Before EPA establishes any regulatory requirements that may significantly or uniquely affect small governments, including tribal governments, it must have developed under section 203 of the UMRA a small government agency plan. The plan must provide for notifying potentially affected small governments, enabling officials of affected small governments to have meaningful and timely input in the development of EPA regulatory proposals with significant Federal intergovernmental mandates, and informing, educating, and advising small governments on compliance with the regulatory requirements.

The EPA has determined that these rule amendments do not contain a Federal mandate that may result in expenditures of $100 million or more for State, local, or tribal governments, in the aggregate, or the private sector in any 1 year. Today's amendments do not add new requirements that would increase the costs of the rule. Thus, these rule amendments are not subject to the requirements of sections 202 and 205 of the UMRA. In addition, EPA has determined that these rule amendments contain no regulatory requirements that might significantly or uniquely affect small governments because they contain no requirements that apply to such governments or impose obligations upon them. Therefore, these rule amendments are not subject to the requirements of section 203 of the UMRA.

F. Regulatory Flexibility Act (RFA), as Amended by the Small Business Regulatory Enforcement Fairness Act of 1996 (SBREFA), 5 U.S.C. 601 et seq.

The RFA generally requires an agency to prepare a regulatory flexibility analysis of any rule subject to notice and comment rulemaking requirements under the Administrative Procedure Act or any other statute unless the agency certifies that the rule will not have a significant economic impact on a substantial number of small entities. Small entities include small businesses, small organizations, and small governmental jurisdictions.

For purposes of assessing the impacts of this proposed rule on small entities, a small entity is defined as: (1) A small business in the North American Industrial Classification System (NAICS) code 325411 or 325412 that has as many as 750 employees; (2) a small business in NAICS code 325199 that has as many as 1,000 employees; (3) a small governmental jurisdiction that is a government of a city, county, town, school district or special district with a population of less than 50,000; and (4) a small organization that is any not-for-profit enterprise which is independently owned and operated and is not dominant in its field.

After considering the economic impacts of the rule amendments on small entities, the EPA has determined

that this action will not have a significant economic impact on a substantial number of small entities. The EPA has determined that none of the small entities will experience a significant impact because the amendments impose no additional regulatory requirements on owners or operators of affected sources.

G. Paperwork Reduction Act

This action does not impose any new information collection burden. However, an information collection request (ICR) has been submitted for approval to the OMB under the Paperwork Reduction Act, 44 U.S.C. 3501 *et seq.*, for the rule which is amended by today's direct final rule. An ICR document has been prepared by EPA (ICR No. 1983.02) and a copy may be obtained from Sandy Farmer by mail at the U.S. EPA, Office of Environmental Information, Collection Strategies Division (2822), 1200 Pennsylvania Avenue NW, Washington, DC 20460, by e-mail at farmer.sandy@epa.gov, or by calling (202) 260–2740. A copy may also be downloaded off the internet at *http://www.epa.gov/icr*.

Burden means the total time, effort, or financial resources expended by persons to generate, maintain, retain, or disclose or provide information to or for a Federal agency. This includes the time needed to review instructions; develop, acquire, install, and utilize technology and systems for the purposes of collecting, validating, and verifying information, processing and maintaining information, and disclosing and providing information; adjust the existing ways to comply with any previously applicable instructions and requirements; train personnel to be able to respond to a collection of information; search data sources; complete and review the collection of information; and transmit or otherwise disclose the information.

An Agency may not conduct or sponsor, and a person is not required to respond to a collection of information unless it displays a currently valid OMB control number. The OMB control numbers for EPA's regulations are listed in 40 CFR part 9 and 48 CFR chapter 15.

H. National Technology Transfer and Advancement Act

Section 12(d) of the National Technology Transfer and Advancement Act (NTTAA), Public Law 104–113 (March 7, 1996), directs all Federal agencies to use voluntary consensus standards instead of government-unique standards in their regulatory activities unless to do so would be inconsistent with applicable law or otherwise impractical. Voluntary consensus standards are technical standards (*e.g.*, material specifications, test methods, sampling and analytical procedures, and business practices) that are developed or adopted by one or more voluntary consensus bodies. Examples of organizations generally regarded as voluntary consensus standards bodies include the American Society for Testing and Materials (ASTM), the National Fire Protection Association (NFPA), and the Society of Automotive Engineers (SAE). The NTTAA requires Federal agencies like EPA to provide Congress, through OMB, with explanations when an agency does not use available and applicable voluntary consensus standards.

This direct final rule does not involve technical standards. Therefore, EPA is not considering the use of any voluntary consensus standards.

I. Congressional Review Act

The Congressional Review Act (CRA), 5 U.S.C. 801, *et seq.*, as added by the SBREFA of 1996, generally provides that before a rule may take effect, the agency adopting the rule must submit a rule report, which includes a copy of the rule, to each House of the Congress and to the Comptroller General of the United States. The EPA will submit a report containing this direct final rule and other required information to the U.S. Senate, the U.S. House of Representatives, and the Comptroller General of the United States prior to publication of this rule in the **Federal Register**. A major rule cannot take effect until 60 days after it is published in the **Federal Register**. This direct final rule is not a ''major rule'' as defined by 5 U.S.C. 804(2). This direct final rule will be effective on September 25, 2002.

J. Executive Order 13211, Actions Concerning Regulations That Significantly Affect Energy Supply, Distribution, or Use

This rule is not subject to Executive Order 13211, ''Actions Concerning Regulations That Significantly Affect Energy Supply, Distribution, or Use'' (66 FR 28355, May 22, 2001) because it is not a significant regulatory action under Executive Order 12866.

List of Subjects in 40 CFR Part 63

Environmental protection, Administrative practice and procedure, Air pollution control, Hazardous substances, Intergovernmental relations, Reporting and recordkeeping requirements.

Dated: May 15, 2002.

Christine Todd Whitman,

Administrator.

For the reasons set out in the preamble, part 63 of title 40, chapter I of the Code of Federal Regulations are amended as follows:

PART 63—[AMENDED]

1. The authority citation for part 63 continues to read as follows:

Authority: 42 U.S.C. 7401, *et seq.*

Subpart YY—[Amended]

2. Section 63.1103 is amended by:

a. Revising paragraph (h)(1)(i) introductory text;

b. Adding paragraph (h)(1)(ii)(C); and

c. Adding, in alphabetical order, definitions of *dry spinning* and *reaction spinning* to paragraph (h)(2).

The revision and additions are to read as follows:

§ 63.1103 Source category-specific applicability, definitions, and requirements.

* * * * *

(h) * * *

(1) * * *

(i) *Affected source.* For the spandex production (as defined in paragraph (h)(2) of this section) source category, the affected source shall comprise all emission points listed in paragraphs (h)(1)(i)(A) through (C) of this section that are associated with a spandex production process unit located at a major source, as defined in section 112(a) of the Act.

* * * * *

(ii) * * *

(C) Emission points listed in paragraphs (h)(1)(i)(A) through (C) of this section that are associated with a dry spinning spandex production process unit.

* * * * *

(2) *Definitions.*

Dry spinning means a fiber-forming process where prepolymer is reacted with a chain-extender to generate polymer prior to spinning; the polymer is dissolved in a solvent and is extruded into a cell of hot gases for fiber formation.

* * * * *

Reaction spinning means a fiber-forming process where prepolymer is extruded into a spin bath that contains a chain-extender; the chemical reaction to make polymer occurs simultaneously with extrusion/fiber formation.

* * * * *

[FR Doc. 02–12842 Filed 7–11–02; 8:45 am]

BILLING CODE 6560–50–P

ENVIRONMENTAL PROTECTION AGENCY

40 CFR Part 63

[FRL–7215–6]

RIN 2060–AH68

National Emission Standards for Hazardous Air Pollutants: Generic Maximum Achievable Control Technology

AGENCY: Environmental Protection Agency (EPA).

ACTION: Proposed rule, amendments.

SUMMARY: This action proposes an amendment to the ''generic'' maximum achievable control technology (MACT) standards for the Spandex Production source category. This action corrects an oversight in the December 6, 2000 proposal.

In the ''Rules and Regulations'' section of this **Federal Register**, we are making this amendment in a direct final rule, without prior proposal, because we view this revision as noncontroversial, and we anticipate no adverse comments. We have explained our reasons for this amendment in the preamble to the direct final rule. If we receive no adverse comments, we will take no further action on this proposed rule. If we receive any timely adverse comments, we will publish a document withdrawing the direct final rule. All such comments will be addressed in a subsequent final rule based on this proposed rule. We will not institute a second comment period on that subsequent final rule. Any parties interested in commenting must do so at this time.

DATES: Comments. Written comments must be received by August 12, 2002, unless a hearing is requested by July 22, 2002. If a hearing is requested, written comments must be received by August 26, 2002.

Public Hearing. If anyone contacts the EPA requesting to speak at a public hearing by July 22, 2002, a public hearing will be held on July 29, 2002.

ADDRESSES: *Comments.* By U.S. Postal Service, send comments (in duplicate, if possible) to: Air and Radiation Docket and Information Center (6102), Attention Docket Number A–98–25, U.S. EPA, 1200 Pennsylvania Avenue, NW., Washington, DC 20460. In person or by courier, deliver comments (in duplicate if possible) to: Air and Radiation Docket and Information Center (6102), Attention Docket Number A–98–25, U.S. EPA, 401 M Street, SW., Washington DC 20460. The EPA requests that a separate copy of each public comment be sent to the contact person listed below (*see* **FOR FURTHER INFORMATION CONTACT**). Comments may also be submitted electronically by following the instructions provided in **SUPPLEMENTARY INFORMATION.**

Public Hearing. If a public hearing is held, it will be held at the EPA's Office of Administration Auditorium, Research Triangle Park, North Carolina at 10:30 a.m.

Docket. Docket No. A–98–25 contains supporting information used in developing the rule. The docket is located at the U.S. EPA, 401 M Street, SW., Washington, DC 20460 in Room M–1500, Waterside Mall (ground floor), and may be inspected from 8 a.m. to 5:30 p.m., Monday through Friday, excluding legal holidays.

FOR FURTHER INFORMATION CONTACT: Ms. Elaine Manning, Waste and Chemical Processes Group, Emission Standards Division (Mailcode C43903), U.S. EPA, Research Triangle Park, North Carolina 27711, telephone number (919) 541–5499, electronic mail (e-mail) address: *manning.elaine@epa.gov.*

SUPPLEMENTARY INFORMATION:

Comments. Comments and data may be submitted by e-mail to: *a-and-r-docket@epa.gov.* Electronic comments must be submitted as an ASCII file to avoid the use of special characters and encryption problems and will also be accepted on disks in WordPerfect file format. All comments and data submitted in electronic form must note the docket number A–98–25. No confidential business information (CBI) should be submitted by e-mail. Electronic comments may be filed online at many Federal Depository Libraries.

Commenters wishing to submit proprietary information for consideration must clearly distinguish such information from other comments and clearly label it as CBI. Send submissions containing such proprietary information directly to the following address, and not to the public docket, to ensure that proprietary information is not inadvertently placed in the docket: Attention: Ms. Elaine Manning, c/o OAQPS Document Control Officer (Mailcode C404–02), U.S. EPA, Research Triangle Park, NC, 27711. The EPA will disclose information identified as CBI only to the extent allowed by the procedures set forth in 40 CFR part 2. If no claim of confidentiality accompanies a submission when it is received by EPA, the information may be made available to the public without further notice to the commenter.

Public Hearing. Persons interested in presenting oral testimony or inquiring as to whether a hearing is to be held should contact Ms. Jolynn Collins, U.S. EPA, Mailcode C43903, Research Triangle Park, NC 27711, telephone (919) 541–5671, at least 2 days in advance of the public hearing. Persons interested in attending the public hearing must also call Ms. Collins to verify the time, date, and location of the hearing. The public hearing will provide interested parties the opportunity to present data, views, or arguments concerning these proposed amendments.

Docket. The docket is an organized and complete file of the administrative record compiled by EPA in the development of this rulemaking. The docket is a dynamic file because material is added throughout the rulemaking process. The docketing system is intended to allow members of the public and industries involved to readily identify and locate documents so that they can effectively participate in the rulemaking process. Along with the proposed and promulgated standards and their preambles, the contents of the docket will serve as the record in the case of judicial review. (See section 307(d)(7)(A) of the Clean Air Act (CAA).) The regulatory text and other materials related to this rulemaking are available for review in the docket or copies may be mailed on request from the Air Docket by calling (202) 260–7548. A reasonable fee may be charged for copying docket materials.

Worldwide Web (WWW). In addition to being available in the docket, an electronic copy of this proposed rule will also be available through the WWW. Following signature, a copy of this action will be posted on the EPA's Technology Transfer Network (TTN) policy and guidance page for newly proposed or promulgated rules http://www.epa.gov/ttn/oarpg. The TTN at EPA's web site provides information and technology exchange in various areas of air pollution control. If more information regarding the TTN is needed, call the TTN HELP line at (919) 541–5384.

Regulated Entities. The regulated category and entities affected by this action include:

Category	NAICS codes	SIC codes	Examples of regulated entities
Industry	325222	2824	Producers of spandex.

This table is not intended to be exhaustive, but rather provides a guide for readers likely to be interested in the revisions to the rule affected by this action. To determine whether your facility, company, business, organization, etc., is regulated by this action, you should carefully examine all of the applicability criteria in § 63.1104 of the rule. If you have questions regarding the applicability of these proposed amendments to a particular entity, consult the person listed in the preceding **FOR FURTHER INFORMATION CONTACT** section.

What Are the Administrative Requirements for This Action?

Regulatory Flexibility Act (RFA), as Amended by the Small Business Regulatory Enforcement Fairness Act of 1996 (SBREFA), 5 U.S.C. 601 et seq.

The RFA generally requires an agency to prepare a regulatory flexibility analysis of any rule subject to notice and comment rulemaking requirements under the Administrative Procedure Act or any other statute unless the agency certifies that the rule will not have a significant economic impact on a substantial number of small entities. Small entities include small businesses, small organizations, and small governmental jurisdictions.

For purposes of assessing the impacts of this proposed rule on small entities, a small entity is defined as: (1) A small business in the North American Industrial Classification System (NAICS) code 325411 or 325412 that has as many as 750 employees; (2) a small business in NAICS code 325199 that has as many as 1,000 employees; (3) a small governmental jurisdiction that is a government of a city, county, town, school district or special district with a population of less than 50,000; and (4) a small organization that is any not-for-profit enterprise which is independently owned and operated and is not dominant in its field.

After considering the economic impacts of this proposed rule on small entities, I certify that this action will not have a significant economic impact on a substantial number of small entities. The EPA has determined that none of the small entities will experience a significant impact because the amendments impose no additional regulatory requirements on owners or operators of affected sources. The amendments correct an oversight.

For information regarding other administrative requirements for this action, please see the direct final rule action that is located in the ''Rules and Regulations'' section of this **Federal Register** publication.

List of Subjects in 40 CFR Part 63

Environmental protection, Administrative practice and procedure, Air pollution control, Hazardous substances, Intergovernmental relations, Reporting and recordkeeping requirements.

Dated: May 15, 2002.

Christine Todd Whitman,

Administrator.

[FR Doc. 02–12843 Filed 7–11–02; 8:45 am]

BILLING CODE 6560–50–P

Federal Register

Friday,
July 12, 2002

Part III

Federal Communications Commission

47 CFR Part 1

Assessment and Collection of Regulatory Fees For Fiscal Year 2002; Final Rule

FEDERAL COMMUNICATIONS COMMISSION

47 CFR Part 1

[MD Docket No. 02–64; FCC 02–205]

Assessment and Collection of Regulatory Fees For Fiscal Year 2002

AGENCY: Federal Communications Commission.

ACTION: Final rule.

SUMMARY: The Commission will revise its Schedule of Regulatory Fees in order to recover the amount of regulatory fees that Congress has required it to collect for fiscal year 2002. Section 9 of the Communications Act of 1934, as amended, provides for the annual assessment and collection of regulatory fees for annual ''Mandatory Adjustments'' and ''Permitted Amendments'' to the Schedule of Regulatory Fees.

DATES: September 9, 2002.

FOR FURTHER INFORMATION CONTACT: Roland Helvajian, Office of Managing Director at (202) 418–0444.

SUPPLEMENTARY INFORMATION:

Adopted: July 3, 2002.

Released: July 5, 2002.

By the Commission: Commissioner Copps concurring and issuing a statement.

TABLE OF CONTENTS

Topic	Paragraph Nos.
I. Introduction	1
II. Background	4
III. Discussion:	
A. Development of FY 2002 Fees	
i. Adjustment of Payment Units	9
ii. Calculation of Revenue Requirements	10
iii. Recalculation of Fees and Procedural Changes	11
B. NPRM Issues and Comments Received	14
i. Amateur Vanity Call Signs	16
ii. Commercial Mobile Radio Service Messaging	17
iii. Interstate Telecommunications Service Providers	19
C. Procedures for Payment of Regulatory Fees	21
i. Annual Payments of Standard Fees	22
ii. Installment Payments for Large Fees	23
iii. Advance Payments of Small Fees	24
iv. De Minimis Fee Payment Liability	25
v. Standard Fee Calculations and Payments	26
vi. Mandatory Use of FCC Registration Number (FRN)	29
vii. Population Count of AM and FM Radio Stations	30
viii. Technical Changes	32
D. Schedule of Regulatory Fees	35
E. Enforcement	36
IV. Procedural Matters:	
A. Ordering Clause	37
B. Authority and Further Information	38
Attachment A—Final Regulatory Flexibility Analysis	
Attachment B—Sources of Payment Unit Estimates for FY 2002	
Attachment C—Calculation of Revenue Requirements and Pro-Rata Fees	
Attachment D—FY 2002 Schedule of Regulatory Fees	
Attachment E—Comparison Between FY 2001, FY 2002 Proposed and FY 2002 Final Regulatory Fees	
Attachment F—Detailed Guidance on Who Must Pay Regulatory Fees	
Attachment G—Description of FCC Activities	
Attachment H—Factors, Measurements, and Calculations that Determine Station Signal Contours and Population Coverages	
Attachment I—Parties Filing Comments and Reply Comments	
Attachment J—AM and FM Radio Regulatory Fees	

I. Introduction

1. By this *Report and Order,* the Commission concludes a proceeding to revise its Schedule of Regulatory Fees to collect the amount of regulatory fees that Congress, pursuant to section 9(a) of the Communications Act, as amended, has required us to collect for Fiscal Year (FY) 2002.[1]

2. We must collect $218,757,000 through regulatory fees to recover the costs of our competition, enforcement, spectrum management, and consumer information activities for FY 2002.[2] *See* Attachment G for a description of these activities. This amount is $18,611,000 or approximately 9.3% more than the amount designated for recovery through regulatory fees for FY 2001.[3] We are revising our fees in order to collect this amount as illustrated in a new fee schedule in Attachment D.

3. In revising our fees, we adjusted the payment units and revenue requirement for each service subject to a fee, consistent with section 159(b)(2). The Schedule of Regulatory Fees is set forth in §§ 1.1152 through 1.1156 of the Commission's rules.[4]

II. Background

4. Section 9(a) of the Communications Act of 1934, as amended, authorizes the Commission to assess and collect annual regulatory fees to recover its regulatory costs.[5] In our *FY 1994 Fee Order,*[6] we adopted the Schedule of Regulatory Fees that Congress initially

[1] 47 U.S.C. 159(a).

[2] Public Law 107–77 and 47 U.S.C. 159(a)(2).

[3] *Assessment and Collection of Regulatory Fees for Fiscal Year 2001,* 66 FR 36177 (2001).

[4] 47 CFR 1.1152 through 1.1156.

[5] 47 U.S.C. 159(a).

[6] 59 FR 30984 (1994).

established, and prescribed rules to govern payment of the fees.[7]

5. For fiscal years after FY 1994, we modified the fee schedule to increase the fees in accordance with the amounts Congress required us to collect in each succeeding fiscal year. Section 9(b)(2), entitled ''Mandatory Adjustments,'' requires that we revise the Schedule of Regulatory Fees to reflect the amount that Congress annually requires us to recover through regulatory fees.[8] Section 9(b)(3), entitled ''Permitted Amendments,'' requires that we determine annually whether additional adjustments to the fees are warranted, taking into account factors that are in the public interest, as well as issues that are reasonably related to the payer of the fee. These amendments permit us to ''add, delete, or reclassify services in the Schedule to reflect additions, deletions or changes in the nature of its services * * *''[9]

6. Section 9(i) requires that we develop accounting systems necessary to adjust our fees pursuant to changes in the cost of regulating various services that are subject to a fee, and for other purposes.[10] The Commission is planning a new improved cost accounting system, which we anticipate to be operational after sufficient testing. For FY 1997, we relied for the first time on cost accounting data to identify our regulatory costs and to develop our FY 1997 fees based upon these costs. Also, in FY 1997, we found that some fee categories received disproportionately high cost allocations. We adjusted for these high cost allocations by redistributing the costs, and maintained a 25% limit on the extent in which service fee categories could be increased. We believed that this 25% limit would enable cost-based service fees to be implemented more gradually over time. We thought that this methodology, which we continued to use for FY 1998, would enable us to develop a regulatory fee schedule that more closely reflected our cost of regulation. Over time, as the cost of regulation increased or decreased, this methodology would enable us to revise the fee schedule to reflect those services whose regulatory costs had changed.

7. However, we found that developing a regulatory fee structure based on available but insufficiently detailed cost information sometimes did not permit us to recover the amount that Congress required us to collect. In some instances, the large increases in the cost of regulation could not be adjusted to an acceptable and balanced level. We concluded that it would be best to discontinue attempts to base the schedule on our available cost data. Instead, we chose to adjust the FY 1999 through FY 2001 fees through ''Mandatory Adjustments'' only. We have found no reason to deviate from this policy for FY 2002. However, we are applying the ''Mandatory Adjustments'' as we did in FY 2001 to better incorporate changes in payment units. Finally, section 9(b)(4)(B) requires us to notify Congress, if there are any ''Permitted Amendments,'' 90 days before those amendments go into effect.[11] However, since we are making no ''Permitted Amendments,'' this section does not apply for FY 2002.

8. We also amended the rules governing our regulatory fee program based upon our prior experience in administering the program.[12] These changes are discussed in more detail in paragraphs 29–34.

III. Discussion

A. Development of FY 2002 Fees

i. Adjustment of Payment Units

9. In calculating FY 2002 regulatory fees for each service, we adjusted the estimated payment units for each service to reflect substantial changes in payment units for many services since adopting our FY 2001 fees. We obtained our estimated payment units through a variety of means, including our licensee data bases, actual prior year payment records, and industry and trade group projections. Whenever possible, we verified these estimates from multiple sources to ensure accuracy of these estimates. Attachment B summarizes how revised payment units were determined for each fee category.[13]

ii. Calculation of Revenue Requirements

10. We compared the sum of all estimated revenue requirements for FY 2001 to the amount that we must collect for FY 2002, which is approximately 9.3% more total revenue than in FY 2001. We increased each FY 2001 fee revenue category estimate by 9.3% to provide a total FY 2002 revenue estimate of $218,757,000. Attachment C provides detailed calculations showing how we determined the revised revenue amounts to be raised for each service.

iii. Recalculation of Fees and Procedural Changes

11. Once we determined the revenue requirement for each service and class of licensee, we divided the revenue requirement by the number of estimated payment units (and by the license term for ''small'' fees) to obtain actual fee amounts for each fee category. These calculated fee amounts were then rounded in accordance with section 9(b)(2) of the Act. *See* Attachment C.

12. Once we established our tentative FY 2002 fees, we evaluated proposals made by Commission staff concerning ''Permitted Amendments'' to the Fee Schedule and to our collection procedures. We examined the results of our calculations to determine if further adjustments of the fees and/or changes to payment procedures were warranted based upon the public interest and other criteria established in 47 U.S.C. 159(b)(3). Unless otherwise noted herein, nothing else in this proceeding is intended to change any policies or procedures established or reaffirmed in the *FY 2001 Order* (66 FR 36177).

13. Finally, we have incorporated, as Attachment F, Guidance containing detailed descriptions of each fee category, information on the individual or entity responsible for paying a particular fee and other important information designed to assist potential fee payers in determining the extent of their fee liability, if any, for FY 2002.

B. NPRM Issues and Comments Received

14. The Commission issued a *Notice of Proposed Rulemaking (NPRM),* adopted on March 22, 2002, setting forth a proposed fee schedule for FY 2002 based on the methodology used in FY 2001. The *NPRM* also requested comment on certain administrative issues, including proposals related to AM and FM population calculation errors, payment of fees using credit cards, the imposition of a processing fee for delinquent fee payments, and refunds involving less than $10.

15. In response to the *NPRM,* we received comments from AT&T; Verizon; the American Association of Paging Carriers; the Allied Personal Communications Industries Association of California; Blooston, Mordkofsky, Dickens, Duffy & Prendergast; and from two amateur radio licensees. Replies were filed by Verizon and American Mobile Telecommunications Association. Arch Wireless, along with the American Association of Paging

[7] 47 U.S.C. 159(b), (f)(1).

[8] 47 U.S.C. 159(b)(2).

[9] 47 U.S.C. 159(b)(3).

[10] 47 U.S.C. 159(i).

[11] 47 U.S.C. 159(b)(4)(B).

[12] 47 CFR 1.1151 *et seq.*

[13] It is important to note also that the required increase in regulatory fee payments of approximately 9.3 percent in FY 2002 will not fall equally on all payers because payment units have changed in several services. When the number of payment units in a service increases from one year to another, fees do not have to rise as much as they would if payment units had decreased or remained stable. Declining payment units have the opposite effect on fees.

Carriers and the Law Firm of Blooston, Mordkofsky, Dickens, Duffy & Prendergast, also filed a Notice of Ex Parte Presentation. None of the parties commented on the NPRM's administrative proposals. The comments of AT&T and Verizon relate to whether the Commission should use more current data or a different methodology in setting the Interstate Telecommunications Service Providers (ITSP) regulatory fee. The comments of the CMRS messaging industry object to the increase proposed to the per unit fee for CMRS messaging providers. Amateur radio commenters object to paying regulatory fees when renewing their authorizations. This *Report and Order* discusses each of these issues and finds no basis for changing the approach proposed in the *NPRM.*

i. Amateur Vanity Call Signs

16. Amateur licensees Steven Karty and William J. Hanrahan support the payment of a regulatory fee for the initial administrative cost actually incurred by the Commission, but question why the amateur vanity call sign fee must be paid upon renewal. William J. Hanrahan also suggests that there be no cost distinction between vanity call signs and systematically assigned call signs. Section 9 of the Communications Act, as amended, provides for the recovery of the Commission's costs associated with its enforcement, policy and rulemaking, user information, and international activities.[14] Every day, Commission staff are engaged in activities involving amateur vanity call signs, such as protecting the assignment of vanity call signs, investigating complaints on the improper or illegal usage of call signs, requests for call signs that are already assigned to someone else, and all related research that is necessary to insure the proper assignment of call signs. Therefore, because the Commission continues to incur costs on vanity call signs even after the issuance or renewal of amateur vanity call signs, we believe that it is appropriate to assess such a regulatory fee upon the renewal of amateur vanity call sign licenses.

ii. Commercial Mobile Radio Service (CMRS) Messaging

17. Allied Personal Communications Industries Association of California (''Allied'') argues that the CMRS Messaging fee of $0.08 per unit represents a 60% increase from last year's per unit fee of $0.05, rather than an increase of 9.3% that Congress requires us to collect.[15] Allied further contends that the methodology for calculating the current fee schedule for CMRS messaging be changed from a per unit basis to an interstate revenue basis.[16] The American Association of Paging Carriers (''AAPC'') and the law firm of Blooston, Mordkofsky, Dickens, Duffy & Prendergast (''BMDDP'') also raise the same issue stating that the per unit fee for CMRS Messaging has increased 60%, far beyond the 9.3% increase intended by Congress.[17] Furthermore, AAPC also discusses the impact of using an estimate of 23.6 million units as the basis for calculating CMRS Messaging fees, and whether a higher estimate (e.g. 38.9 million or even 45.3 million units) should not be used.[18] The law firm of Blooston, Mordkofsky, Dickens, Duffy & Prendergast also argues that an $0.08 per unit regulatory fee would be disastrous to an already fragile paging industry whose businesses are generally defined as ''small'' or ''very small'' businesses.[19] BMDDP also argues that because these businesses are small and community oriented, there is a great deal of customer loyalty to these local businesses, which is likely to change with declining revenues and higher regulatory fees.[20] And finally, BMDDP argues that historically speaking, the Commission has followed a policy of gradualism in protecting fledging telecommunications industries and small businesses, particularly if this policy will further the public interest.[21] In an oral Ex Parte presentation, Arch Wireless, Inc. (''Arch''), along with the American Association of Paging Carriers and the law firm of Blooston, Mordkofsky, Dickens, Duffy & Prendergast, suggested that the Commission revise its methodology and use revenues, rather than estimated CMRS messaging units, as the basis for configuring regulatory fees in the future.[22]

18. The 9.3% increase has been applied to the total revenue required to be collected from the CMRS Messaging industry, not to the per unit fee assessed in FY 2001. The FY 2002 unit fee results from dividing this new revenue requirement by the estimated number of units which we believe will be reported and a fee paid for FY 2002. While using a higher unit estimate of ''38.9 or even 45.3 million units'' would significantly lower the per unit fee, the commenters have not demonstrated that those estimates accurately represent the number of paying units currently in use by the messaging industry. Furthermore, the commenters have provided no basis to substantiate the claim that a $0.03 annual increase per unit will be damaging to the industry. With respect to the suggestion that revenues be used as the basis for determining regulatory fees for CMRS messaging, this suggestion will require further consideration, particularly in determining whether a comprehensive source of revenue information is available for all entities engaged in providing CMRS messaging services.

iii. Interstate Telecommunications Service Providers (ITSP)

19. AT&T Corporation (''AT&T'') asserts that the current regulatory fees mechanism does not conform to the methodology used for assessment and collection of universal service support and requests the Commission, to be consistent, reduce the time lag between the accrual of revenues and the payment of regulatory fees.[23] AT&T argues that this time lag between assessment and collection unfairly disadvantages certain carriers and reduces competition.[24] In revising its schedule of fees, the Commission follows a rigid time schedule that incorporates such steps as collecting data, reviewing the information, seeking public comments and reply comments, submitting a 60-day or 90-day notice to OMB and Congress, respectively, as well as to allow sufficient time for review and adoption of the Report and Order. Hence, AT&T's suggestion to use more current data from FCC Form 499–Q (submitted by carriers on August 1, 2002) is simply impractical given our rigid time schedule.[25] In addition, AT&T also notes that our fee calculations are based on 2001 revenue data, and since FY 2002 regulatory fees are not paid until September 2002, a time lag exists that could alter the regulatory rate for ITSP fees, which can be rectified by the use of FCC Form 499–Q (data from second quarter 2002). Carriers have not yet filed second

[14] 47 U.S.C. 159(a)(1).

[15] Comments submitted by Allied Personal Communications Industries Association of California on April 23, 2002, page 4.

[16] Ibid.

[17] Comments submitted on April 23, 2002 by the American Association of Paging Carriers (page 2), and the law firm of Blooston, Mordkofsky, Dickens, Duffy & Prendergast (page 3).

[18] American Association of Paging Carriers (pages 2, 4–6).

[19] Blooston, Mordkofsky, Dickens, Duffy & Prendergast, pages 1–2.

[20] Ibid., pages 2–4.

[21] Ibid., pages 5–6, 8–9.

[22] Notice of Oral Ex Parte Presentation, submitted on May 17, 2002.

[23] Comments submitted by AT&T on April 23, 2002, page 4.

[24] Ibid, page 5.

[25] Ibid, page 7.

quarter 2002 revenues in Form 499–Q filings, and in any case, Form 499–Q lacks sufficient detail to permit calculation of the regulatory fee base. However, for purposes of calculating ITSP regulatory fees, what is most important is the submission of a *comprehensive* data form that meets our rigid time schedule, and FCC Form 499–A serves this purpose well. Although FCC Form 499–Q may reflect more current revenues data, we believe that it is not submitted with sufficient detail to permit carriers to complete Form 159–W, which is used as the basis for calculating and paying the Interstate Telecommunications Service Providers (ITSP) fee obligation.

20. AT&T also suggests that the Commission simultaneously modify its regulatory fee collections methodology from a historical revenue-based assessment to a connection and capacity-based mechanism if and when the Commission modifies its universal service contribution methodology.[26] In the *Universal Service Contribution Methodology Further Notice,* we specifically sought comment on the appropriate basis for calculating regulatory fees if the Commission were to adopt a connection and capacity-based universal service contribution methodology.[27] Until we resolve the issue of how contributions to universal service should be calculated, contemplating any revision to our regulatory fee methodology would be premature.

C. Procedures for Payment of Regulatory Fees

21. We are retaining the procedures that we have established for the payment of regulatory fees. *See* paragraphs 22–24. Section 9(f) requires that we permit ''payment by installments in the case of fees in large amounts, and in the case of small amounts, shall require the payment of the fee in advance for a number of years not to exceed the term of the license held by the payer.'' *See* 47 U.S.C. 159(f)(1). Consistent with section 9(f), we are again establishing three categories of fee payments, based upon the category of service for which the fee payment is due and the amount of the fee to be paid. The fee categories are: (1) ''Standard'' fees, (2) ''large'' fees, and (3) ''small'' fees.

i. Annual Payments of Standard Fees

22. As we have in the past, we are treating regulatory fee payments by certain licensees as ''standard fees'' which are those regulatory fees that are payable in full on an annual basis. Payers of standard fees are not required to make advance payments for their full license term and are not eligible for installment payments. All standard fees are payable in full on the date we establish for payment of fees in their regulatory fee category. The payment dates for each regulatory fee category will begin September 10, 2002 and end at close of business September 25, 2002.

ii. Installment Payments for Large Fees

23. While time constraints will again preclude an opportunity for installment payments, regulatees in any category of service with a liability of $12,000 or more may choose to pay these fees on the last date that fee payments may be submitted. The date for installment payments will end at close of business on September 25, 2002.

iii. Advance Payments of Small Fees

24. As we have in the past, we are treating regulatory fee payments by certain licensees as ''small'' fees subject to advance payment consistent with the requirements of section 9(f)(2). Advance payments will be required from licensees of those services that we decided would be subject to advance payments in our FY 1994 *Report and Order*, and to those additional payers noted.[28] Payers of advance fees will submit the entire fee due for the full term of their licenses when filing their initial, renewal, or reinstatement application. Regulatees subject to a payment of small fees shall pay the amount due for the current fiscal year multiplied by the number of years in the term of their requested license. In the event that the required fee is adjusted following their payment of the fee, the payer would not be subject to the payment of a new fee until filing an application for renewal or reinstatement of the license. Thus, payment for the full license term would be made based upon the regulatory fee applicable at the time the application is filed. The starting date for payment of small fees established in this proceeding is September 10, 2002.

iv. De Minimis Fee Payment Liability

25. As we have in the past, regulatees whose *total regulatory fee liability*, including all categories of fees for which payment is due by an entity, amounts to less than $10 will be exempted from fee payment in FY 2002.

v. Standard Fee Calculations and Payment Dates

26. For licensees and permittees of Media (formerly Mass Media) services, we propose that the responsibility for payment of regulatory fees rests with the holder of the permit or license on October 1, 2001. However, in instances where a Media service license or authorization is *transferred or assigned after October 1, 2001*, and arrangements to pay have not been made between the two parties, the fee is still due and must be paid by the licensee or holder of the authorization on the date that the fee payment is due. For licensees, permittees and holders of other authorizations in the Wireline Competition Bureau (formerly Common Carrier) and Cable Services (presently within the Media Bureau) whose fees are not based on a subscriber, unit, or circuit count, we are proposing that fees be paid for any authorization issued on or before *October 1, 2001*. A pending change in the status of a license or permit that is not granted as of that date is not taken into account, and the fee is based on the authorization that existed on October 1, 2001.

27. For regulatees whose fees are based upon a subscriber, unit or circuit count, such as cable subscriber services and Commercial Mobile Radio Service (CMRS) cellular, mobile, and messaging services, the number of a regulatees' subscribers, units or circuits on *December 31, 2001*, will be used to calculate the fee payment.[29] A pending

[26] But see Verizon Reply Comments submitted on May 3, 2002.

[27] *See Federal-State Joint Board on Universal Service, 1998 Biennial Regulatory Review—Streamlined Contributor Reporting Requirements Associated with Administration of Telecommunications Relay Service, North American Numbering Plan, Local Number Portability, and Universal Service Support Mechanisms, Telecommunications Services for Individuals with Hearing and Speech Disabilities, and the Americans with Disabilities Act of 1990, Administration of the North American Plan and North American Numbering Plan Cost Recovery Contribution Factor and Fund Size, Number Resource Optimization, Telephone Number Portability, Trust-in-Billing and Billing Format*, CC Docket Nos. 96–45, 98–171, 90–571, 92–237, 99–200, 95–116, 98–170, Further Notice of Proposed Rulemaking and Order, paragraph 82 (released February 26, 2002) (Universal Service Contribution Methodology Further Notice).

[28] Applicants for new, renewal and reinstatement licenses in the following services will be required to pay their regulatory fees in advance: Land Mobile Services, Microwave Services, Marine (Ship) Service, Marine (Coast) Service, Private Land Mobile (Other) Services, Aviation (Aircraft) Service, Aviation (Ground) Service, General Mobile Radio Service (GMRS), 218–219 MHz Service (if any applications should be filed), Rural Radio Service, and Amateur Vanity Call Signs.

[29] Cable system operators are to compute their subscribers as follows: Number of single family dwellings + number of individual households in multiple dwelling unit (apartments, condominiums, mobile home parks, etc.) paying at the basic subscriber rate + bulk rate customers + courtesy and free service. Note: Bulk-Rate Customers = Total annual bulk-rate charge divided by basic annual subscription rate for individual households. Cable

Continued

change in the status of a license or permit that is not granted as of that date is not effective, and the fee is based on the classification that existed on that date. Where a license or authorization is transferred or assigned after December 31, 2001, the fee shall be paid by the licensee or holder of the authorization on the date that the payment is due. For facilities-based common carriers with active international bearer circuits, the fee is based on the circuit count as of December 31, 2001.

28. Because of the time constraint in paying regulatory fees, the Commission *highly recommends* that entities submitting *more than twenty-five (25) Form 159–C's* use the *electronic fee filer program* when sending in their regulatory fee payment. This will not only reduce errors that can result, but also reduce the amount of paperwork that is received by the Commission. Furthermore, as was the practice last year, the Commission will, for the convenience of payers, accept fee payments made *in advance* of the normal formal window for the payment of regulatory fees.

vi. Mandatory Use of FCC Registration Number (FRN)

29. Pursuant to MD Docket No. 00–205 adopted on August 24, 2001 effective December 3, 2001 regulatory fee filers are required to provide FRN's with regulatory fee payments.[30] This matter was first noted in the *FY 2001 Regulatory Fee NPRM*, to which the Commission received no comments. Regulatory fee payments received without an FRN will be retained by the Agency. The FCC will send the filer a letter notifying them that the payment was received without an FRN and that proper credit for the payment will not occur until the FRN is provided. The filer may receive dunning notices from the FCC until the appropriate FRN is provided for the payment.

vii. Population Count of AM and FM Radio Stations

30. The population count for radio stations is not derived merely by a census count of the surrounding community, but from a formula that incorporates various indices such as power, tower size, class size, and other technical attributes. The methodology for calculating the population count is listed in *Attachment H* of this *Report and Order*. Because a number of components are used to calculate the population city grade of each station, it is possible that in some instances the calculation of the population count and related fee may inadvertently be incorrectly stated in the Media Regulatory Fees Public Notice that identifies the radio station call signs and their respective fees. Therefore, if a licensee has paid the fee listed in the Media Regulatory Fees Public Notice and it is later determined that the population calculation for the station is incorrect, and a letter verifying the correct population count is provided from the supplier of the population calculation, the Commission will refund the fee amount overpaid. Similarly, if it is determined that the population calculation and related fee for the station has been understated, and the Commission obtains verification of the correct population calculation from the supplier of the population calculation, the Commission will bill the licensee for the difference in fees that should have been paid.

31. In addition, we will make corrections for such population calculation errors, whether by refunding or billing for corrected fee amounts, only for three (3) fiscal years after the error appears in the Media Regulatory Fees Public Notice. For example, in the case of a population calculation error resulting in an overstated fee amount, if the Media Regulatory Fees Public Notice for FY 2002 contains a population calculation and related fee error and the licensee provides the appropriate verification of the error before September 30, 2005, the Commission will refund the amount overpaid. Similarly, in a case where a population calculation error results in an understated fee amount, if the Fiscal Year 2002 population calculation error is discovered and verified before September 30, 2005, the Commission will bill the licensee for the difference between the correct fee and the fee listed in the Fiscal Year 2002 Media Regulatory Fees Public Notice. We believe that three years provides a reasonable time for a licensee or the Commission to discover and seek to rectify population calculation errors, and that limiting the time for correction of fees will protect both licensees and the Government from being subject to indefinite potential obligations to make corrective payments. We proposed this issue of addressing incorrect population counts for AM and FM radio stations in the *Notice of Proposed Rulemaking*, but we did not receive any comments or reply comments relating to this particular issue.

viii. Technical Changes

32. Regulatory fee payments may be made by Visa, MasterCard, American Express, and Discover credit cards. When paying by credit card, regulatees have two options: (1) Regulatees may submit their payment by using the Commission's FeeFiler (an electronic payment system), or (2) Regulatees may provide the requested credit card information on the FCC Form 159, (Remittance Advice), and mail it to the address described in the Public Notice. Refunds of regulatory fees paid by credit cards are made by check payable to the regulatory fee payor. *No refunds are issued to the card processor*.

33. It has come to our attention that we did not make corresponding revisions to certain descriptive portions of sections 1.1152 and 1.1157 of our rules when the regulatory fees for wireless radio services were amended to include standard annual regulatory fees based on payment units for Commercial Mobile Radio Service (CMRS) Mobile and CMRS Messaging. The descriptive portions of sections 1.1152 and 1.1157 of our rules are changed to reflect that it is no longer the case that all regulatory fee payments for wireless radio services are paid in advance when applications are filed.

34. The Commission incurs transaction costs when processing refunds. The Commission has determined that, in some instances, the transaction costs outweigh the dollar amount of the refund. Therefore, for purposes of more efficient money management, payments in excess of an application or regulatory fee will be refunded only if the overpayment is *$10 or more*.

D. Schedule of Regulatory Fees

35. The Commission's Schedule of Regulatory Fees for FY 2002 is contained in Attachment D of this *Report and Order*.

E. Enforcement

36. As required in 47 U.S.C. 159(c), an additional charge shall be assessed as a penalty for late payment of any regulatory fee. A late payment penalty of 25 percent of the amount of the required regulatory fee will be assessed on the first day following the deadline date for filing of these fees. Failure to pay regulatory fees and/or any late penalty will subject regulatees to sanctions, including the provisions set forth in the Debt Collection Improvement Act of 1996 (''DCIA''). The Commission assesses administrative processing charges on delinquent debts to recover additional costs incurred in

system operators may base their count on ''a typical day in the last full week'' of December 2001, rather than on a count as of December 31, 2001.

[30] 66 FR 47890 (September 14, 2001).

processing and handling the related debt pursuant to the DCIA and section 1.1940(d) of the Commission's Rules. These administrative processing charges will be assessed on any delinquent regulatory fee, in addition to the 25 percent late charge penalty. Partial or underpayment of regulatory fees are treated in the following manner. The licensee will be given credit for the amount paid, but if it is later determined that the fee paid is incorrect or was submitted after the deadline date, the 25 percent late charge penalty will be assessed on the portion that is submitted after the filing window. *See* 47 CFR 1.1164. Failure to pay regulatory fees can result in the initiation of a proceeding to revoke any and all authorizations held by the delinquent payor. *See* 47 CFR 1.1164.

IV. Procedural Matters

A. Ordering Clause

37. Accordingly, it is ordered that the rule changes specified herein be adopted. It is further ordered that the rule changes made herein will become effective September 9, 2002, which is no less that 30 days from the date of publication in the **Federal Register**. A Final Regulatory Flexibility Analysis (FRFA) has been performed and is found in Attachment A, and it is ordered that the Federal Communications Commission's Consumer and Governmental Affairs Bureau, Reference Information Center, send this to Small Business Administration (SBA). Finally, it is ordered that this proceeding is *terminated*.

B. Authority and Further Information

38. Authority for this proceeding is contained in sections 4(i) and (j), 8, 9, and 303(r) of the Communications Act of 1934, as amended.[31] It is ordered that this *Report and Order* is adopted. It is further ordered that the Commission's Consumer and Governmental Affairs Bureau, Reference Information Center, shall send a copy of this *Report and Order,* including the Final Regulatory Flexibility Analysis (FRFA), to the Chief Counsel for Advocacy of the Small Business Administration.

39. Further information about this proceeding may be obtained by contacting the Fees Hotline at (888) 225–5322.

List of Subjects in 47 CFR Part 1

Administrative practice and procedures, Communications common carriers, Radio, Telecommunications, Television.

Federal Communications Commission.

Marlene H. Dortch,

Secretary.

Rule Changes

Accordingly, part 1 of Title 47 of the Code of Federal Regulations is amended to read as follows:

PART 1—PRACTICE AND PROCEDURE

1. The authority citation for part 1 continues to read as follows:

Authority: 47 U.S.C. 151, 154(i), 154(j), 155, 225, 303(r), 309 and 325(e).

2. Section 1.1110 is amended by revising paragraph (a) introductory text to read as follows:

§ 1.1110 Form of payment.

(a) Fee payments should be in the form of a check, bank draft, on money order denominated in U.S. dollars and drawn on a United States financial institution and made payable to the Federal Communications Commission or by a Visa, MasterCard, American Express, or Discover credit card. No other credit card is acceptable. Fees for applications and other filings paid by credit card will not be accepted unless the credit card section of FCC Form 159 is completed in full. The Commission discourages applicants from submitting cash and will not be responsible for cash sent through the mail. Personal or corporate checks dated more than six months prior to their submission to the Commission's lockbox bank and postdated checks will not be accepted and will be returned as deficient. Third party checks (i.e., checks with a third party as maker or endorser) will not be accepted.

* * * * *

3. Section 1.1113 is amended by revising paragraph (a)(5) Note to read as follows:

§ 1.1113 Return or refund of charges.

(a) * * *

(5) * * *

Note— Payments in excess of an application fee will be refunded only if the overpayment is $10 or more.

* * * * *

4. Section 1.1152 is revised to read as follows:

§ 1.1152 Schedule of annual regulatory fees and filing locations for wireless radio services.

Exclusive use services (per license)	Fee amount [1]	Address
1. Land Mobile (Above 470 MHz and 220 MHz Local, Base Station & SMRS) (47 CFR, Part 90):		
(a) New, Renew/Mod (FCC 601 & 159)	$5.00	FCC, P.O. Box 358130, Pittsburgh, PA 15251–5130.
(b) New, Renew/Mod (Electronic Filing) (FCC 601 & 159)	5.00	FCC, P.O. Box 358994, Pittsburgh, PA 15251–5994.
(c) Renewal Only (FCC 601 & 159)	5.00	FCC, P.O. Box 358245, Pittsburgh, PA 15251–5245.
(d) Renewal Only (Electronic Filing) (FCC 601 & 159)	5.00	FCC, P.O. Box 358994, Pittsburgh, PA 15251–5994.
220 MHz Nationwide		
(a) New, Renew/Mod (FCC 601 & 159)	5.00	FCC, P.O. Box 358130, Pittsburgh, PA 15251–5130.
(b) New, Renew/Mod (Electronic Filing) (FCC 601 & 159)	5.00	FCC, P.O. Box 358994, Pittsburgh, PA 15251–5994.
(c) Renewal Only (FCC 601 & 159)	5.00	FCC, P.O. Box 358245, Pittsburgh, PA 15251–5245.
(d) Renewal Only (Electronic Filing) (FCC 601 & 159)	5.00	FCC, P.O. Box 358994, Pittsburgh, PA 15251–5994.
2. Microwave (47 CFR Pt. 101) (Private):		
(a) New, Renew/Mod (FCC 601 & 159)	10.00	FCC, P.O. Box 358130, Pittsburgh, PA 15251–5130.
(b) New, Renew/Mod (Electronic Filing) (FCC 601 & 159)	10.00	FCC, P.O. Box 358994, Pittsburgh, PA 15251–5994.
(c) Renewal Only (FCC 601 & 159)	10.00	FCC, P.O. Box 358245, Pittsburgh, PA 15251–5245.
(d) Renewal Only (Electronic Filing) (FCC 601 & 159)	10.00	FCC, P.O. Box 358994, Pittsburgh, PA 15251–5994.
3. 218–219 MHz Service:		
(a) New, Renew/Mod (FCC 601 & 159)	25.00	FCC, P.O. Box 358130, Pittsburgh, PA 15251–5130.
(b) New, Renew/Mod (Electronic Filing) (FCC 601 & 159)	25.00	FCC, P.O. Box 358994, Pittsburgh, PA 15251–5994.
(c) Renewal Only (FCC 601 & 159)	25.00	FCC, P.O. Box 358245, Pittsburgh, PA 15251–5245.

[31] 47 U.S.C. 154(i)–(j), 159, & 303(r).

Exclusive use services (per license)	Fee amount [1]	Address
(d) Renewal Only (Electronic Filing) (FCC 601 & 159)	25.00	FCC, P.O. Box 358994, Pittsburgh, PA 15251–5994.
4. Shared Use Services:		
Land Mobile (Frequencies Below 470 MHz—except 220 MHz)		
(a) New, Renew/Mod (FCC 601 & 159)	5.00	FCC, P.O. Box 358130, Pittsburgh, PA 15251–5130.
(b) New, Renew/Mod (Electronic Filing) (FCC 601 & 159)	5.00	FCC, P.O. Box 358994, Pittsburgh, PA 15251–5994.
(c) Renewal Only (FCC 601 & 159)	5.00	FCC, P.O. Box 358245, Pittsburgh, PA 15251–5245.
(d) Renewal Only (Electronic Filing) (FCC 601 & 159)	5.00	FCC, P.O. Box 358994, Pittsburgh, PA 15251–5994.
General Mobile Radio Service		
(a) New, Renew/Mod (FCC 605 & 159)	5.00	FCC, P.O. Box 358130, Pittsburgh, PA 15251–5130.
(b) New, Renew/Mod (Electronic Filing) (FCC 605 & 159)	5.00	FCC, P.O. Box 358994, Pittsburgh, PA 15251–5994.
(c) Renewal Only (FCC 605 & 159)	5.00	FCC, P.O. Box 358245, Pittsburgh, PA 15251–5245.
(d) Renewal Only (Electronic Filing) (FCC 605 & 159)	5.00	FCC, P.O. Box 358994, Pittsburgh, PA 15251–5994.
Rural Radio (Part 22)		
(a) New, Additional Facility, Major Renew/Mod (Electronic Filing) (FCC 601 & 159).	5.00	FCC, P.O. Box 358994, Pittsburgh, PA 15251–5994.
(b) Renewal, Minor Renew/Mod (Electronic Filing) (FCC 601 & 159).	5.00	FCC, P.O. Box 358994, Pittsburgh, PA 15251–5994.
Marine Coast		
(a) New Renewal/Mod (FCC 601 & 159)	5.00	FCC, P.O. Box 358130, Pittsburgh, PA 15251–5130.
(b) Renewal Only (FCC 601 & 159)	5.00	FCC, P.O. Box 358245, Pittsburgh, PA 15251–5245.
(c) Renewal Only (Electronic Filing) (FCC 601 & 159)	5.00	FCC, P.O. Box 358994, Pittsburgh, PA 15251–5994.
Aviation Ground		
(a) New, Renewal/Mod (FCC 601 & 159)	10.00	FCC, P.O. Box 358130, Pittsburgh, PA 15251–5130.
(b) Renewal Only (FCC 601 & 159)	10.00	FCC, P.O. Box 358245, Pittsburgh, PA 15251–5245.
(c) Renewal Only (Electronic Filing) (FCC 601 & 159)	10.00	FCC, P.O. Box 358994, Pittsburgh, PA 15251–5994.
Marine Ship		
(a) New, Renewal/Mod (FCC 605 & 159)	10.00	FCC, P.O. Box 358130, Pittsburgh, PA 15251–5130.
(b) New, Renewal/Mod (Electronic Filing) (FCC 605 & 159).	10.00	FCC, P.O. Box 358994, Pittsburgh, PA 15251–5994.
(c) Renewal Only (FCC 605 & 159)	10.00	FCC, P.O. Box 358245, Pittsburgh, PA 15251–5245.
(d) Renewal Only (Electronic Filing) (FCC 605 & 159)	10.00	FCC, P.O. Box 358994, Pittsburgh, PA 15251–5994.
Aviation Aircraft		
(a) New, Renew/Mod (FCC 605 & 159)	5.00	FCC, P.O. Box 358130, Pittsburgh, PA 15251–5130.
(b) New, Renew/Mod (Electronic Filing) (FCC 605 & 159)	5.00	FCC, P.O. Box 358994, Pittsburgh, PA 15251–5994.
(c) Renewal Only (FCC 605 & 159)	5.00	FCC, P.O. Box 358245, Pittsburgh, PA 15251–5245.
(d) Renewal Only (Electronic Filing) (FCC 605 & 159)	5.00	FCC, P.O. Box 358994, Pittsburgh, PA 15251–5994.
5. Amateur Vanity Call Signs:		
(a) Initial or Renew (FCC 605 & 159)	1.45	FCC, P.O. Box 358130, Pittsburgh, PA 15251–5130.
(b) Initial or Renew (Electronic Filing) (FCC 605 & 159)	1.45	FCC, P.O. Box 358994, Pittsburgh, PA 15251–5994.
6. CMRS Mobile Services (per unit) (FCC 159)	[2] .24	FCC, P.O. Box 358835, Pittsburgh, PA 15251–5835.
7. CMRS Messaging Services (per unit) (FCC 159)	[3] .08	FCC, P.O. Box 358835, Pittsburgh, PA 15251–5835.

[1] Note that ''small fees'' are collected in advance for the entire license term. Therefore, the annual fee amount shown in this table that is a small fee (categories 1 through 5) must be multiplied by the 5- or 10-year license term, as appropriate, to arrive at the total amount of regulatory fees owed. It should be further noted that application fees may also apply as detailed in § 1.1102 of this chapter.

[2] These are standard fees that are to be paid in accordance with § 1.1157(b) of this chapter.

[3] These are standard fees that are to be paid in accordance with § 1.1157(b) of this chapter.

5. Section 1.1153 is revised to read as follows:

§ 1.1153 Schedule of annual regulatory fees and filing locations for mass media services.

	Fee amount	Address
Radio [AM and FM] (47 CFR, Part 73)		
1. AM Class A:		
<=20,000 population	$500	FCC, Radio, P.O. Box 358835, Pittsburgh, PA 15251–5835.
20,001–50,000 population	925	
50,001–125,000 population	1,500	

	Fee amount	Address
125,001–400,000 population	2,250	
400,001–1,000,000 population	3,125	
1,000,000 population	4,975	
2. AM Class B:		
<=20,000 population	375	
20,001–50,000 population	725	
50,001–125,000 population	975	
125,001–400,000 population	1,575	
400,001–1,000,000 population	2,525	
1,000,000 population	4,100	
3. AM Class C:		
<=20,000 population	275	
20,001–50,000 population	375	
50,001–125,000 population	525	
125,001–400,000 population	800	
400,001–1,000,000 population	1,425	
1,000,000 population	2,075	
4. AM Class D:		
<=20,000 population	325	
20,001–50,000 population	525	
50,001–125,000 population	775	
125,001–400,000 population	950	
400,001–1,000,000 population	1,700	
1,000,000 population	2,625	
5. AM Construction Permit	370	
6. FM Classes A, B1 and C3:		
<=20,000 population	375	
20,001–50,000 population	725	
50,001–125,000 population	975	
125,001–400,000 population	1,575	
400,001–1,000,000 population	2,525	
?1,000,000 population	4,100	
7. FM Classes B, C, C1 and C2:		
<=20,000 population	500	
20,001–50,000 population	925	
50,001–125,000 population	1,500	
125,001–400,000 population	2,250	
400,001–1,000,000 population	3,125	
?1,000,000 population	4,975	
8. FM Construction Permits	1,500	
TV (47 CFR, Part 73) VHF Commercial		
1. Markets 1 thru 10	47,050	FCC, TV Branch, P.O. Box 358835, Pittsburgh, PA 15251–5835.
2. Markets 11 thru 25	34,700	
3. Markets 26 thru 50	23,625	
4. Markets 51 thru 100	15,150	
5. Remaining Markets	3,525	
6. Construction Permits	2,750	
UHF Commercial		
1. Markets 1 thru 10	12,800	FCC, UHF Commercial, P.O. Box 358835, Pittsburgh, PA 15251–5835.
2. Markets 11 thru 25	10,300	
3. Markets 26 thru 50	6,600	
4. Markets 51 thru 100	3,875	
5. Remaining Markets	1,075	
6. Construction Permits	5,175	
Satellite UHF/VHF Commercial		
1. All Markets	805	FCC Satellite TV, P.O. Box 358835, Pittsburgh, PA 15251–5835.
2. Construction Permits	420	
Low Power TV, TV/FM Translator, & TV/FM Booster (47 CFR Part 74).	320	FCC, Low Power, P.O. Box 358835, Pittsburgh, PA 15251–5835.
Broadcast Auxiliary	10	FCC, Auxiliary, P.O. Box 358835, Pittsburgh, PA 15251–5835.
Multipoint Distribution (Includes MMDS, MDS, & LMDS)	430	FCC, Multipoint, P.O. Box 358835, Pittsburgh, PA 15251–5835

6. Section 1.1154 is revised to read as follows:

§ 1.1154 Schedule of annual regulatory charges and filing locations for common carrier services.

	Fee amount	Address
Radio Facilities		
1. Microwave (Domestic Public Fixed) (Electronic Filing) (FCC Form 601 & 159).	$10.00	FCC, P.O. Box 358994, Pittsburgh, PA 15251–5994.

	Fee amount	Address
Carriers		
1. Interstate Telephone Service Providers (per interstate and international end-user revenues (see FCC Form 499–A).	.00153	FCC, Carriers, P.O. Box 358835, Pittsburgh, PA 15251–5835.

7. Section 1.1155 is revised to read as follows:

§ 1.1155 Schedule of regulatory fees and filing locations for cable television services.

	Fee amount	Address
1. Cable Television Relay Service	$65	FCC, Cable, P.O. Box 358835, Pittsburgh, PA 15251–5835.
2. Cable TV System	.53	

8. Section 1.1156 is revised to read as follows:

§ 1.1156 Schedule of regulatory fees and filing locations for international services.

	Fee amount	Address
Radio Facilities		
1. International (HF) Broadcast	$495	FCC, International, P.O. Box 358835, Pittsburgh, PA 15251–5835.
2. International Public Fixed	1,400	FCC, International, P.O. Box 358835, Pittsburgh, PA 15251–5835.
Space Stations (Geostationary Orbit)	99,700	FCC, Space Stations, P.O. Box 358835, Pittsburgh, PA 15251–5835.
Space Stations (Non-Geostationary Orbit)	103,200	FCC, Space Stations, P.O. Box 358835, Pittsburgh, PA 15251–5835.
Earth Stations		
Transmit/Receive & Transmit Only (per authorization or registration).	$140	FCC, Earth Station, P.O. Box 358835, Pittsburgh, PA 15251–5835.
Carriers		
1. International Bearer Circuits (per active 64KB circuit or equivalent).	$2.00	FCC, International, P.O. Box 358835, Pittsburgh, PA 15251–5835.

* * * * *

9. Section 1.1157 is amended by revising paragraphs (a) and (b) to read as follows:

§ 1.1157 Payment of charges for regulatory fees.

* * * * *

(a) (1) The amount of the regulatory fee payment that is due with any application for authorization shall be the multiple of the number of years in the entire term of the requested license or other authorization multiplied by the annual fee payment required in the Schedule of Regulatory Fees, effective at the time the application is filed. Except as set forth in § 1.1160, advance payments shall be final and shall not be readjusted during the term of the license or authorization, notwithstanding any subsequent increase or decrease in the annual amount of a fee required under the Schedule of Regulatory Fees.

(2) Failure to file the appropriate regulatory fee due with an application for authorization will result in the return of the accompanying application, including an application for which the Commission has assigned a specific filing deadline.

(b)(1) Payments of standard regulatory fees applicable to certain wireless radio, mass media, common carrier, cable and international services shall be filed in full on an annual basis at a time announced by the Commission or the Managing Director, pursuant to delegated authority, and published in the **Federal Register**.

(2) Large regulatory fees, as annually defined by the Commission, may be submitted in installment payments or in a single payment on a date certain as announced by the Commission or the Managing Director, pursuant to delegated authority, and published in the **Federal Register.**

* * * * *

10. Section 1.1158 is amended by revising the section heading and introductory paragraph to read as follows:

§ 1.1158 Form of payment for regulatory fees.

Any regulatory fee payment must be submitted in the form of a check, bank draft or money order denominated in U.S. dollars and drawn on a United States financial institution and made payable to the Federal Communications Commission or by Visa, Mastercard, American Express or Discover credit cards only. The Commission discourages applicants from submitting cash payments and will not be responsible for cash sent through the mail. Personal or corporate checks dated more than six months prior to their submission to the Commission's lockbox bank and postdated checks will not be accepted and will be returned as deficient.

11. Section 1.1160 is amended by revising paragraph (a)(1) to read as follows:

§ 1.1160 Refunds of regulatory fees.

(a) * * *

(1) When no regulatory fee is required or an excessive fee has been paid. In the case of an overpayment, the refund amount will be based on the applicants', permittees', or licensees' entire submission. All refunds will be issued to the payor named in the appropriate block of the FCC Form 159. Payments in excess of a regulatory fee will be refunded only if the overpayment is $10.00 or more.

* * * * *

Note: The following attachments will not appear in the Code of Federal Regulations.

Attachment A—Final Regulatory Flexibility Analysis

1. As required by the Regulatory Flexibility Act (RFA),[32–35] an Initial Regulatory Flexibility Analysis (IRFA) of the possible significant economic impact on small entities was incorporated in the *Notice of Proposed Rulemaking, In the Matter of Assessment and Collection of Regulatory Fees for Fiscal Year 2002.*[36] The Commission sought written public comments on the proposals in its FY 2002 regulatory fees NPRM, including comments on the IRFA. This present Final Regulatory Flexibility Analysis (FRFA) conforms to the RFA.[37]

I. Need for, and Objectives of, the Proposed Rules

2. This rulemaking proceeding is initiated to amend the Schedule of Regulatory Fees in the amount of $218,757,000, the amount that Congress has required the Commission to recover. The Commission seeks to collect the necessary amount through its revised fees, as contained in the attached Schedule of Regulatory Fees, in the most efficient manner possible and without undue burden on the public.

II. Summary of Significant Issues Raised by Public Comments in Response to the IRFA

3. None.

III. Description and Estimate of the Number of Small Entities to Which the Proposed Rules Will Apply

4. The RFA directs agencies to provide a description of and, where feasible, an estimate of the number of small entities that may be affected by the proposed rules, if adopted.[38] The RFA defines the term ''small entity'' as having the same meaning as the terms ''small business,'' ''small organization,'' and ''small governmental jurisdiction.'' [39] In addition, the term ''small business'' has the same meaning as the term ''small business concern'' under the Small Business Act.[40] A small business concern is one which: (1) Is independently owned and operated; (2) is not dominant in its field of operation; and (3) satisfies any additional criteria established by the Small Business Administration (SBA).[41] A small organization is generally ''any not-for-profit enterprise which is independently owned and operated and is not dominant in its field.'' [42] Nationwide, as of 1992, there were approximately 275,801 small organizations.[43] ''Small governmental jurisdiction''[44] generally means ''governments of cities, counties, towns, townships, villages, school districts, or special districts, with a population of less than 50,000.'' [45] As of 1992, there were approximately 85,006 governmental entities in the United States.[46] This number includes 38,978 counties, cities, and towns; of these, 37,566, or 96%, have populations of fewer than 50,000.[47] The Census Bureau estimates that this ratio is approximately accurate for all governmental entities. Thus, of the 85,006 governmental entities, we estimate that 81,600 (96%) are small entities. Below, we further describe and estimate the number of small entity licensees and regulatees that may be affected by these rules.

Cable Services or Systems

5. The SBA has developed a definition of small entities for cable and other pay television services, which includes all such companies generating $11 million or less in revenue annually.[48] This definition includes cable systems operators, closed circuit television services, direct broadcast satellite services, multipoint distribution systems, satellite master antenna systems and subscription television services. According to the Census Bureau data from 1992, there were 1,788 total cable and other pay television services and 1,423 had less than $11 million in revenue.[49]

6. The Commission has developed its own definition of a small cable system operator for purposes of rate regulation. Under the Commission's rules, a ''small cable company'' is one serving fewer than 400,000 subscribers nationwide.[50] Based on our most recent information, we estimate that there were 1,439 cable operators that qualified as small cable system operators at the end of 1995.[51] Since then, some of those companies may have grown to serve over 400,000 subscribers, and others may have been involved in transactions that caused them to be combined with other cable operators. Consequently, we estimate that there are fewer than 1,439 small entity cable system operators.

7. The Communications Act of 1934, as amended, also contains a definition of a small cable system operator, which is ''a cable operator that, directly or through an affiliate, serves in the aggregate fewer than 1 percent of all subscribers in the United States and is not affiliated with any entity or entities whose gross annual revenues in the aggregate exceed $250,000,000.'' [52] The Commission has determined that there are 68,980,000 subscribers in the United States.[53] Therefore, we estimate that an operator serving fewer than 689,800 subscribers shall be deemed a small operator, if its annual revenues, when combined with the total annual revenues of all of its affiliates, do not exceed $250 million in the aggregate.[54] Based

[32–35] 5 U.S.C. 603. The RFA, 5 U.S.C. 601 *et seq.,* has been amended by the Contract With America Advancement Act of 1996, Public Law No. 104–121, 110 Stat. 847 (1996) (CWAAA). Title II of the CWAAA is the Small Business Regulatory Enforcement Fairness Act of 1996 (SBREFA).

[36] 67 FR 17325 (April 10, 2002).

[37] 5 U.S.C. 604.

[38] 5 U.S.C. 603(b)(3).

[39] 5 U.S.C. 601(6).

[40] 5 U.S.C. 601(3) (incorporating by reference the definition of ''small business concern'' in 15 U.S.C. 632). Pursuant to the RFA, the statutory definition of a small business applies ''unless an agency, after consultation with the Office of Advocacy of the Small Business Administration and after opportunity for public comment, establishes one or more definitions of such term which are appropriate to the activities of the agency and publishes such definition(s) in the **Federal Register**.'' 5 U.S.C. 601(3).

[41] Small Business Act, 15 U.S.C. 632 (1996).

[42] 5 U.S.C. 601(4).

[43] 1992 Economic Census, U.S. Bureau of the Census, Table 6 (special tabulation of data under contract to Office of Advocacy of the U.S. Small Business Administration).

[44] 47 CFR 1.1162

[45] 5 U.S.C. 601(5).

[46] U.S. Dept. of Commerce, Bureau of the Census, ''1992 Census of Governments.''

[47] *Id.*

[48] 13 CFR 121.201, North American Industry Classification System (NAICS) codes 51321 and 51322.

[49] *1992 Economic Census Industry and Enterprise Receipts Size Report*, Table 2D, NAICS codes 51321 and 51322 (U.S. Bureau of the Census data under contract to the Office of Advocacy of the U.S. Small Business Administration).

[50] 47 CFR 76.901(e). The Commission developed this definition based on its determination that a small cable system operator is one with annual revenues of $100 million or less. *Implementation of Sections of the 1992 Cable Act: Rate Regulation, Sixth Report and Order and Eleventh Order on Reconsideration*, 10 FCC Rcd 7393 (1995), 60 FR 10534 (Feb. 27, 1995).

[51] Paul Kagan Associates, Inc., *Cable TV Investor*, Feb. 29, 1996 (based on figures for Dec. 30, 1995).

[52] 47 U.S.C. 543(m)(2).

[53] *Annual Assessment of the Status on Competition in the Market for the Delivery of Video Programming*, CS Docket No. 00–132, Seventh Annual Report, FCC 01–1 (released January 8, 2001), Table C–1.

[54] *Id.* 47 CFR 76.1403(b).

on available data, we estimate that the number of cable operators serving 689,800 subscribers or less totals 1,450.[55] We do not request nor collect information on whether cable system operators are affiliated with entities whose gross annual revenues exceed $250,000,000,[56] and therefore are unable at this time to estimate more accurately the number of cable system operators that would qualify as small cable operators under the definition in the Communications Act.

8. *Other Pay Services.* Other pay television services are also classified under the North American Industry Classification System (NAICS) codes 51321 and 51322, which includes cable systems operators, closed circuit television services, direct broadcast satellite services (DBS),[57] multipoint distribution systems (MDS),[58] satellite master antenna systems (SMATV), and subscription television services.

Wireline Competition Services and Related Entities

9. The most reliable source of information regarding the total numbers of certain common carrier and related providers nationwide appears to be data the Commission publishes annually in its Telecommunications Provider Locator report, which encompasses data compiled from FCC Form 499–A Telecommunications Reporting Worksheets.[59] According to data in the most recent report, there are 5,679 interstate service providers.[60] These providers include, *inter alia*, incumbent local exchange carriers, competitive access providers (CAPS)/ competitive local exchange carriers (CLECs), local resellers and other local exchange carriers, interexchange carriers, operator service providers, prepaid calling card providers, toll resellers, and other toll carriers.

10. We have included small incumbent local exchange carriers (LECs)[61] in this present RFA analysis. As noted above, a ''small business'' under the RFA is one that, *inter alia*, meets the pertinent small business size standard (*e.g.*, a telephone communications business having 1,500 or fewer employees), and ''is not dominant in its field of operation.''[62] The SBA's Office of Advocacy contends that, for RFA purposes, small incumbent LECs are not dominant in their field of operation because any such dominance is not ''national'' in scope.[63] We have therefore included small incumbent LECs in this FRFA analysis, although we emphasize that this FRFA action has no effect on Commission analyses and determinations in other, non-RFA contexts.

11. *Total Number of Telephone Companies Affected.* The Census Bureau reports that, at the end of 1992, there were 3,497 firms engaged in providing telephone services, as defined therein, for at least one year.[64] This number contains a variety of different categories of carriers, including local exchange carriers, interexchange carriers, competitive access providers, operator service providers, pay telephone operators, and resellers. It seems certain that some of these 3,497 telephone service firms may not qualify as small entities or small incumbent LECs because they are not ''independently owned and operated.''[65] It seems reasonable to conclude that fewer than 3,497 telephone service firms are small entity telephone service firms or small incumbent LECs that may be affected by these revised rules.

12. *Wireline Carriers and Service Providers.* The SBA has developed a definition of small entities for telephone communications companies other than radiotelephone (wireless) companies. The Census Bureau reports that there were 2,321 such telephone companies in operation for at least one year at the end of 1992.[66] According to the SBA's definition, a small business telephone company other than a radiotelephone (wireless) company is one employing no more than 1,500 persons.[67] All but 26 of the 2,321 non-radiotelephone (wireless) companies listed by the Census Bureau were reported to have fewer than 1,000 employees. Even if all 26 of the remaining companies had more than 1,500 employees, there would still be 2,295 non-radiotelephone (wireless) companies that might qualify as small entities or small incumbent LECs. Although it seems certain that some of these carriers are not independently owned and operated, we are unable at this time to estimate with greater precision the number of wireline carriers and service providers that would qualify as small business concerns under SBA's definition. Therefore, we estimate that fewer than 2,295 small telephone communications companies other than radiotelephone (wireless) companies are small entities or small incumbent LECs that may be affected by these revised rules.

13. *Local Exchange Carriers (LECS), Competitive Access Providers (CAPs), Interexchange Carriers (IXCs), Operator Service Providers (OSPs), Payphone Providers, and Resellers.* Neither the Commission nor the SBA has developed a definition for small LECs, competitive access providers (CAPs), interexchange carriers (IXCs), operator service providers (OSPs), payphone providers, or resellers. The closest applicable definition for these carrier-types under SBA rules is for telephone communications companies other than radiotelephone (wireless) companies.[68] The most reliable source of information that we know regarding the number of these carriers nationwide appears to be the data that we collect annually in connection with the FCC 499–A Telecommunications Reporting Worksheets.[69] According to our most recent data, there are 1,329 incumbent and other LECs, 532 CAPs and competitive local exchange carriers (CLECs), 229 IXCs, 22 OSPs, 936 payphone providers, 32 prepaid calling card providers, 38 other toll carriers, and 710 local and toll resellers.[70] Although it seems certain that some of these carriers are not independently owned and operated, or have more than 1,500 employees, we are unable at this time to estimate with greater precision the number of these carriers that would qualify as small business concerns under the SBA's definition. Therefore, we estimate that there are fewer than 1,329 small entity incumbent and other LECs, 532 CAPs/ CLECs, 229 IXCs, 22 OSPs, 936 payphone providers, and 710 local and toll resellers, 32 prepaid calling card providers, and 38 other toll carriers that may be affected by the revised rules.

International Services

14. The Commission has not developed a definition of small entities applicable to licensees in the international services. Therefore, the applicable definition of small entity is generally the definition under the SBA rules applicable to Communications Services, Not Elsewhere Classified (NEC).[71] This definition provides that a small entity is expressed as one with $11.0 million or less in annual receipts.[72] According to the Census Bureau, there were a total of 848 communications services providers, NEC, in operation in 1992, and a total of 775 had annual receipts of less than $10.0 million.[73]

[55] *FCC Announces New Subscriber Count for the Definition of Small Cable Operator*, Public Notice, DA–01–0158 (released January 24, 2001).

[56] We do receive such information on a case-by-case basis only if a cable operator appeals a local franchise authority's finding that the operator does not qualify as a small cable operator pursuant to § 76.1403(b) of the Commission's rules. *See* 47 CFR 76.1403(d).

[57] Direct Broadcast Services (DBS) are discussed with the international services, *infra*.

[58] Multipoint Distribution Services (MDS) are discussed with the mass media services, *infra*.

[59] FCC, Common Carrier Bureau, Industry Analysis Division, *Telecommunications Provider Locator*, Table 1 (November 2001).

[60] FCC, *Telecommunications Provider Locator* at Table 1.

[61] *See* 47 U.S.C. 251(h) (defining ''incumbent local exchange carrier'').

[62] 5 U.S.C. 601(3).

[63] Letter *from* Jere W. Glover, Chief Counsel for Advocacy, SBA, *to* William E. Kennard, Chairman, FCC (May 27, 1999). The Small Business Act contains a definition of ''small business concern,'' which the RFA incorporates into its own definition of ''small business.'' *See* 15 U.S.C. 632(a) (Small Business Act); 5 U.S.C. 601(3) (RFA). SBA regulations interpret ''small business concern'' to include the concept of dominance on a national basis. 13 CFR 121.102(b). Since 1996, out of an abundance of caution, the Commission has included small incumbent LECs in its regulatory flexibility analyses. *See, e.g., Implementation of the Local Competition Provisions of the Telecommunications Act of 1996*, CC Docket, 96–98, First Report and Order, 11 FCC Rcd 15499, 16144–45 (1996), 61 FR 45476 (Aug. 29, 1996).

[64] U.S. Department of Commerce, Bureau of the Census, *1992 Census of Transportation, Communications, and Utilities: Establishment and Firm Size*, at Firm Size 1–123 (1995) *(1992 Census)*.

[65] *See generally* 15 U.S.C. 632(a)(1).

[66] *1992 Census, supra,* at Firm Size 1–123.

[67] 13 CFR 121.201, NAICS codes 51331, 51333, and 51334.

[68] 13 CFR 121.201, NAICS codes 51331, 51333, and 51334.

[69] *See Telecommunications Provider Locator* at Table 1.

[70] *Telecommunications Provider Locator* at Table 1. The total for resellers includes both toll resellers and local resellers.

[71] An exception is the Direct Broadcast Satellite (DBS) Service, *infra*.

[72] 13 CFR 121.201, NAICS codes 48531, 513322, 51334, and 51339.

[73] *1992 Economic Census Industry and Enterprise Receipts Size Report*, Table 2D, NAICS codes 48531, 513322, 51334, and 513391 (U.S. Bureau of the

The Census report does not provide more precise data.

15. *International Broadcast Stations.* Commission records show that there are approximately 19 international high frequency broadcast station authorizations. We do not request nor collect annual revenue information, and are unable to estimate the number of international high frequency broadcast stations that would constitute a small business under the SBA definition. However, the Commission estimates that only six international high frequency broadcast stations are subject to regulatory fee payments.

16. *International Public Fixed Radio (Public and Control Stations).* There is one licensee in this service subject to payment of regulatory fees, and the licensee does not constitute a small business under the SBA definition.

17. *Fixed Satellite Transmit/Receive Earth Stations.* There are approximately 4,303 earth station authorizations, a portion of which are Fixed Satellite Transmit/Receive Earth Stations. We do not request nor collect annual revenue information, and are unable to estimate the number of the earth stations that would constitute a small business under the SBA definition.

18. *Fixed Satellite Small Transmit/Receive Earth Stations.* There are approximately 4,303 earth station authorizations, a portion of which are Fixed Satellite Small Transmit/Receive Earth Stations. We do not request nor collect annual revenue information, and are unable to estimate the number of fixed small satellite transmit/receive earth stations that would constitute a small business under the SBA definition.

19. *Fixed Satellite Very Small Aperture Terminal (VSAT) Systems.* These stations operate on a primary basis, and frequency coordination with terrestrial microwave systems is not required. Thus, a single ''blanket'' application may be filed for a specified number of small antennas and one or more hub stations. There are 485 current VSAT System authorizations. We do not request nor collect annual revenue information, and are unable to estimate the number of VSAT systems that would constitute a small business under the SBA definition.

20. *Mobile Satellite Earth Stations.* There are 21 licensees. We do not request nor collect annual revenue information, and are unable to estimate the number of mobile satellite earth stations that would constitute a small business under the SBA definition.

21. *Radio Determination Satellite Earth Stations.* There are four licensees. We do not request nor collect annual revenue information, and are unable to estimate the number of radio determination satellite earth stations that would constitute a small business under the SBA definition.

22. *Space Stations (Geostationary).* There are presently an estimated 71 Geostationary Space Station authorizations. We do not request nor collect annual revenue information, and are unable to estimate the number of geostationary space stations that would constitute a small business under the SBA definition.

23. *Space Stations (Non-Geostationary).* There are presently six Non-Geostationary Space Station authorizations. We do not request nor collect annual revenue information, and are unable to estimate the number of non-geostationary space stations that would constitute a small business under the SBA definition.

24. *Direct Broadcast Satellites.* Because DBS provides subscription services, DBS falls within the SBA-recognized definition of ''Cable and Other Pay Television Services.'' [74] This definition provides that a small entity is one with $11.0 million or less in annual receipts.[75] Currently, there are nine DBS authorizations, though there are only two DBS companies in operation at this time. We do not request nor collect annual revenue information for DBS services, and are unable to determine the number of DBS operators that would constitute a small business under the SBA definition.

Media Services

25. *Commercial Radio and Television Services.* The proposed rules and policies will apply to television broadcasting licensees and radio broadcasting licensees.[76] The SBA defines a television broadcasting station that has $10.5 million or less in annual receipts as a small business.[77] Television broadcasting stations consist of establishments primarily engaged in broadcasting visual programs by television to the public, except cable and other pay television services.[78] Included in this industry are commercial, religious, educational, and other television stations.[79] Also included are establishments primarily engaged in television broadcasting and which produce taped television program materials.[80] Separate establishments primarily engaged in producing taped television program materials are classified under another NAICS number.[81] There were 1,509 television stations operating in the nation in 1992.[82] That number has remained fairly constant as indicated by the approximately 1,686 operating television broadcasting stations in the nation as of September 30, 2001.[83] For 1992,[84] the number of television stations that produced less than $10.0 million in revenue was 1,155 establishments.[85] Only commercial stations are subject to regulatory fees.

26. Additionally, the SBA defines a radio broadcasting station that has $5 million or less in annual receipts as a small business.[86] A radio broadcasting station is an establishment primarily engaged in broadcasting aural programs by radio to the public.[87] Included in this industry are commercial, religious, educational, and other radio stations.[88] Radio broadcasting stations, which primarily are engaged in radio broadcasting and which produce radio program materials, are similarly included.[89] However, radio stations which are separate establishments and are primarily engaged in producing radio program material are classified under another NAICS number.[90] The 1992 Census indicates that 96 percent (5,861 of 6,127) of radio station establishments produced less than $5 million in revenue in 1992.[91] Official Commission records indicate that at total of 11,334 individual radio stations were operating in

Census data under contract to the Office of Advocacy of the U.S. Small Business Administration).

[74] 13 CFR 121.201, NAICS codes 51321 and 51322.

[75] 13 CFR 121.201, NAICS codes 51321 and 51322.

[76] While we tentatively believe that the SBA's definition of ''small business'' greatly overstates the number of radio and television broadcast stations that are small businesses and is not suitable for purposes of determining the impact of the proposals on small television and radio stations, for purposes of this *Report and Order* we utilize the SBA's definition in determining the number of small businesses to which the proposed rules would apply. We reserve the right to adopt, in the future, a more suitable definition of ''small business'' as applied to radio and television broadcast stations or other entities subject to the proposed rules in this *Report and Order,* and to consider further the issue of the number of small entities that are radio and television broadcasters or other small media entities. *See Report and Order in MM Docket No. 93–48 (Children's Television Programming),* 11 FCC Rcd 10660, 10737–38 (1996), 61 FR 43981 (Aug. 27, 1996), *citing* 5 U.S.C. 601(3).

[77] 13 CFR 121.201, NAICS code 51312.

[78] Economics and Statistics Administration, Bureau of Census, U.S. Department of Commerce, *1992 Census of Transportation, Communications and Utilities, Establishment and Firm Size, Series UC92–S–1,* Appendix A–9 (1995) (*1992 Census, Series UC92–S–1*).

[79] *Id.; see* Executive Office of the President, Office of Management and Budget, *Standard Industrial Classification Manual* (1987), at 283, which describes ''Television Broadcasting Stations'' (SIC code 4833, now NAICS code 51312) as: Establishments primarily engaged in broadcasting visual programs by television to the public, except cable and other pay television services. Included in this industry are commercial, religious, educational and other television stations. Also included here are establishments primarily engaged in television broadcasting and which produce taped television program materials.

[80] *1992 Census, Series UC92–S–1,* at Appendix A–9.

[81] *Id.,* NAICS code 51211 (Motion Picture and Video Tape Production); NAICS 51229 (Theatrical Producers and Miscellaneous Theatrical Services) (producers of live radio and television programs).

[82] FCC News Release No. 31327 (January 13, 1993); *1992 Census, Series UC92–S–1,* at Appendix A–9.

[83] FCC News Release, ''Broadcast Station Totals as of September 30, 2001.''

[84] A census to determine the estimated number of Communications establishments is performed every five years, in years ending with a ''2'' or ''7.'' *See 1992 Census, Series UC92–S–1,* at III.

[85] The amount of $10 million was used to estimate the number of small business establishments because the relevant Census categories stopped at $9,999,999 and began at $10,000,000. No category for $10.5 million existed. Thus, the number is as accurate as it is possible to calculate with the available information.

[86] 13 CFR 121.201, NAICS codes 513111 and 513112.

[87] *1992 Census, Series UC92–S–1,* at Appendix A–9.

[88] *Id.*

[89] *Id.*

[90] *Id.*

[91] The Census Bureau counts radio stations located at the same facility as one establishment. Therefore, each co-located AM/FM combination counts as one establishment.

1992.[92] As of September 30, 2001, Commission records indicate that a total of 13,012 radio stations were operating, of which 8,285 were FM stations.[93] Only commercial stations are subject to regulatory fees.

27. The rules may affect an estimated total of 1,230 television stations, approximately 1,281 of which are considered small businesses.[94] The revised rules will also affect an estimated total of 10,819 radio stations, approximately 12,209 of which are small businesses.[95] These estimates may overstate the number of small entities because the revenue figures on which they are based do not include or aggregate revenues from non-television or non-radio affiliated companies. There are also 2,256 low power television stations (LPTV).[96] Given the nature of this service, we will presume that all LPTV licensees qualify as small entities under the SBA definition.

28. *Auxiliary, Special Broadcast and Other Program Distribution Services.* This service involves a variety of transmitters, generally used to relay broadcast programming to the public (through translator and booster stations) or within the program distribution chain (from a remote news gathering unit back to the station). The Commission has not developed a definition of small entities applicable to broadcast auxiliary licensees. The applicable definitions of small entities are those, noted previously, under the SBA rules applicable to radio broadcasting stations and television broadcasting stations.[97]

29. The Commission estimates that there are approximately 3,600 translators and boosters. The Commission does not collect financial information on any broadcast facility, and the Department of Commerce does not collect financial information on these auxiliary broadcast facilities. We believe that most, if not all, of these auxiliary facilities could be classified as small businesses by themselves. We also recognize that most commercial translators and boosters are owned by a parent station which, in some cases, would be covered by the revenue definition of small business entity discussed above. These stations would likely have annual revenues that exceed the SBA maximum to be designated as a small business (either $5 million for a radio station or $10.5 million for a TV station). Furthermore, they do not meet the Small Business Act's definition of a ''small business concern'' because they are not independently owned and operated.[98]

30. *Multipoint Distribution Service (MDS).* This service has historically provided primarily point-to-multipoint and one-way video services to subscribers.[99] The Commission recently amended its rules to allow MDS licensees to provide a wide range of high-speed, two-way services to a variety of users.[100] In connection with the 1996 MDS auction, the Commission defined small businesses as entities that had annual average gross revenues for the three preceding years not in excess of $40 million.[101] The Commission established this small business definition in the context of this particular service and with the approval of the SBA.[102] The MDS auction resulted in 67 successful bidders obtaining licensing opportunities for 493 Basic Trading Areas (BTAs).[103] Of the 67 auction winners, 61 met the definition of a small business. At this time, we estimate that of the 61 small business MDS auction winners, 48 remain small business licensees. In addition to the 48 small businesses that hold BTA authorizations, there are approximately 392 incumbent MDS licensees that are considered small entities.[104] After adding the number of small business auction licensees to the number of incumbent licensees not already counted, we find that there are currently approximately 440 MDS licensees that are defined as small businesses under either the SBA or the Commission's rules. Some of those 440 small business licensees may be affected by these revised rules.

Wireless and Commercial Mobile Services

31. *Cellular Licensees.* Neither the Commission nor the SBA has developed a definition of small entities specific to cellular licensees. Therefore, the applicable definition of small entity is the definition under the SBA rules applicable to radiotelephone (wireless) companies. This provides that a small entity is a radiotelephone (wireless) company employing no more than 1,500 persons.[105] According to the Census Bureau, only twelve radiotelephone (wireless) firms from a total of 1,178 such firms which operated during 1992 had 1,000 or more employees.[106] Even if all twelve of these firms were cellular telephone companies, nearly all cellular carriers were small businesses under the SBA's definition. In addition, we note that there are 1,758 cellular licenses; however, a cellular licensee may own several licenses. According to the November 2001 *Telecommunications Provider Locater,* 858 wireless telephony providers reported that they were engaged in the provision of either cellular service, Personal Communications Service (PCS) services, and SMR telephony carriers, which are placed together in the data.[107] We do not have data specifying the number of these carriers that are not independently owned and operated or have more than 1,500 employees, and are unable at this time to estimate with greater precision the number of cellular service carriers that would qualify as small business concerns under the SBA's definition. We estimate that there are fewer than 858 small wireless service providers that may be affected by these revised rules.

32. *220 MHz Radio Service—Phase I Licensees.* The 220 MHz service has both Phase I and Phase II licenses. Phase I licensing was conducted by lotteries in 1992 and 1993. There are approximately 1,515 such non-nationwide licensees and four nationwide licensees currently authorized to operate in the 220 MHz band. The Commission has not developed a definition of small entities specifically applicable to such incumbent 220 MHz Phase I licensees. To estimate the number of such licensees that are small businesses, we apply the definition under the SBA rules applicable to Radiotelephone (wireless) Communications companies. This definition provides that a small entity is a radiotelephone (wireless) company employing no more than 1,500 persons.[108] According to the Census Bureau, only 12 radiotelephone (wireless) firms out of a total of 1,178 such firms which operated during 1992 had 1,000 or more employees.[109] If this general ratio continues in 2001 in the context of Phase I 220 MHz licensees, we estimate that nearly all such licensees are small businesses under the SBA's definition.

33. *220 MHz Radio Service—Phase II Licensees.* The Phase II 220 MHz service is a new service, and is subject to spectrum auctions. In the *220 MHz Third Report and Order,* 62 FR 16004, April 3, 1997, we adopted criteria for defining small and very

[92] FCC News Release, No. 31327 (Jan. 13, 1993).

[93] FCC News Release, ''Broadcast Station Totals as of September 30, 2001.''

[94] We use an estimated figure of 77 percent (from 1992) of TV stations operating at less than $10 million and apply it to the 2000 total of 1,663 TV stations to arrive at 1,281 stations categorized as small businesses.

[95] We use the 96% figure of radio station establishments with less than $5 million revenue from data presented in the year 2000 estimate (*FCC News Release,* September 30, 2000) and apply it to the 12,717 individual station count to arrive at 12,209 individual stations as small businesses.

[96] FCC News Release, ''Broadcast Station Totals as of September 30, 2001.''

[97] 13 CFR 121.201, NAICS codes 513111 and 513112.

[98] 15 U.S.C. 632.

[99] For purposes of this item, MDS includes single channel Multipoint Distribution Service (MDS), Local Multipoint Distribution Service (LMDS), and the Multichannel Multipoint Distribution Service (MMDS). *See* 66 FR 36177.

[100] *Amendment of Parts 21 and 74 to Enable Multipoint Distribution Service and Instructional Television Fixed Service Licensees to Engage in Fixed Two-Way Transmissions,* 13 FCC Rcd 19112 (1998), *recon.,* 14 FCC Rcd 12764 (1999), *further recon.,* 15 FCC Rcd 14566 (2000).

[101] 47 CFR 21.961 and 1.2110.

[102] *Amendment of Parts 21 and 74 of the Commission's Rules with Regard to Filing Procedures in the Multipoint Distribution Service and in the Instructional Television Fixed Service and Implementation of Section 309(j) of the Communications Act—Competitive Bidding,* 10 FCC Rcd 9589, 9670 (1995), 60 FR 36524 (July 17, 1995).

[103] Basic Trading Areas (BTAs) were designed by Rand McNally and are the geographic areas by which MDS was auctioned and authorized. *See id.* At 9608.

[104] 47 U.S.C. 309(j). (Hundreds of stations were licensed to incumbent MDS licensees prior to implementation of Section 309(j) of the Communications Act of 1934, 47 U.S.C. Section 309(j). For these pre-auction licenses, the applicable standard is SBA's small business size standard for ''other telecommunications'' (annual receipts of $11 million or less). *See* 13 CFR 121.201.

[105] 13 CFR 121.201, NAICS code 513322.

[106] *1992 Census, Series UC92–S–1,* at Table 5, NAICS code 513322.

[107] *Telecommunications Provider Locater,* Table 1 (November 2001).

[108] 13 CFR 121.201, NAICS code 513322.

[109] U.S. Bureau of the Census, U.S. Department of Commerce, 1992 Census of Transportation, Communications, and Utilities, UC92–S–1, Subject Series, Establishment and Firm Size, Table 5, Employment Size of Firms; 1992, NAICS codes 513321, 513322, and 51333.

small businesses for purposes of determining their eligibility for special provisions such as bidding credits and installment payments.[110] We have defined a small business as an entity that, together with its affiliates and controlling principals, has average gross revenues not exceeding $15 million for the preceding three years. A very small business is defined as an entity that, together with its affiliates and controlling principals, has average gross revenues that do not exceed $3 million for the preceding three years.[111] The SBA has approved these definitions.[112] Auctions of Phase II licenses commenced on September 15, 1998, and closed on October 22, 1998.[113] In the first auction, 908 licenses were auctioned in three different-sized geographic areas: three nationwide licenses, 30 Regional Economic Area Group (EAG) Licenses, and 875 Economic Area (EA) Licenses. Of the 908 licenses auctioned, 693 were sold.[114] Thirty-nine small businesses won licenses in the first 220 MHz auction. The second auction included 225 licenses: 216 EA licenses and 9 EAG licenses. Fourteen companies claiming small business status won 158 licenses.[115]

34. *700 MHz Guard Band Licenses.* In the *700 MHz Guard Band Order,* we adopted criteria for defining small businesses and very small businesses for purposes of determining their eligibility for special provisions such as bidding credits and installment payments.[116] We have defined a small business as an entity that, together with its affiliates and controlling principals, has average gross revenues not exceeding $15 million for the preceding three years. Additionally, a very small business is defined as an entity that, together with its affiliates and controlling principals, has average gross revenues that are not more than $3 million for the preceding three years. An auction of 52 Major Economic Area (MEA) licenses commenced on September 6, 2000, and closed on September 21, 2000.[117] Of the 104 licenses auctioned, 96 licenses were sold to 9 bidders. Five of these bidders were small businesses that won a total of 26 licenses. A second auction of 700 MHz Guard Band licenses commenced on February 13, 2001 and closed on February 21, 2001. All eight of the licenses auctioned were sold to three bidders. One of these bidders was a small business that won a total of two licenses.[118]

35. *Private and Common Carrier Paging.* In the Paging *Third Report and Order,* we adopted criteria for defining small businesses and very small businesses for purposes of determining their eligibility for special provisions such as bidding credits and installment payments.[119] We have defined a small business as an entity that, together with its affiliates and controlling principals, has average gross revenues not exceeding $15 million for the preceding three years. Additionally, a very small business is defined as an entity that, together with its affiliates and controlling principals, has average gross revenues that are not more than $3 million for the preceding three years.[120] The SBA has approved these definitions.[121] An auction of Metropolitan Economic Area licenses commenced on February 24, 2000, and closed on March 2, 2000.[122] Of the 985 licenses auctioned, 440 were sold. Fifty-seven companies claiming small business status won. At present, there are approximately 24,000 Private-Paging site-specific licenses and 74,000 Common Carrier Paging licenses. According to the most recent data in the *Telecommunications Provider Locator,* 608 carriers reported that they were engaged in the provision of either paging or ''other mobile'' services, which are placed together in the data.[123] We do not have data specifying the number of these carriers that are not independently owned and operated or have more than 1,500 employees, and therefore are unable at this time to estimate with greater precision the number of paging carriers that would qualify as small business concerns under the SBA's definition. Consequently, we estimate that there are fewer than 608 small paging carriers that may be affected by these revised rules. We estimate that the majority of private and common carrier paging providers would qualify as small entities under the SBA definition.

36. *Broadband Personal Communications Service (PCS).* The broadband PCS spectrum is divided into six frequencies designated A through F, and the Commission has held auctions for each block. The Commission defined ''small entity'' for Blocks C and F as an entity that has average gross revenues of less than $40 million in the three previous calendar years.[124] For Block F, an additional classification for ''very small business'' was added and is defined as an entity that, together with its affiliates, has average gross revenues of not more than $15 million for the preceding three calendar years.[125] These regulations defining ''small entity'' in the context of broadband PCS auctions have been approved by the SBA.[126] No small businesses within the SBA-approved definition bid successfully for licenses in Blocks A and B. There were 90 winning bidders that qualified as small entities in the Block C auctions. A total of 93 small and very small business bidders won approximately 40% of the 1,479 licenses for Blocks D, E, and F.[127] On March 23, 1999, the Commission re-auctioned 347 C, D, E, and F Block licenses; there were 48 small business winning bidders. An additional classification for ''very small business'' was added for C Block and is defined as ''an entity that together with its affiliates and persons or entities that hold interest in such entity and their affiliates, has average annual gross revenues that are not more than forty million dollars for the proceding three years.[128] The SBA approved this definition.''[129] Based on this information, we conclude that the number of small broadband PCS licensees will include the 90 winning C Block bidders and the 93 qualifying bidders in the D, E, and F blocks, plus the 48 winning bidders in the re-auction, for a total of 231 small entity PCS providers as defined by the SBA and the Commission's auction rules. On January 26, 2001, the Commission completed the auction of 422 C and F Broadband PCS licenses in Auction No. 35. Of the 35 winning bidders in this auction, 29 qualified as small or very small businesses.

37. *Narrowband PCS.* To date, two auctions of narrowband PCs licenses have been conducted. Through these auctions, the Commission has awarded a total of 41 licenses, out of which 11 were obtained by small businesses. For purposes of the two auctions that have already been held, small businesses were defined as entities with average gross revenues for the prior three calendar years of $40 million or less. To ensure meaningful participation of small business entities in the auctions, the

[110] *220 MHz Third Report and Order,* 12 FCC Rcd 10943, 11068–70, at paragraphs 291-295 (1997).

[111] *220 MHz Third Report and Order,* 12 FCC Rcd at 11068–69, paragraph 291.

[112] *See* Letter to D. Phython, Chief, Wireless Telecommunications Bureau (FCC) from A. Alvarez, Administrator, SBA (January 6, 1998).

[113] *See generally* Public Notice, ''220 MHz Service Auction Closes,'' Public Notice, 14 FCC Rcd 605 (1998).

[114] Public Notice, ''FCC Announces It is Prepared to Grant 654 Phase II 220 MHz Licenses After Final Payment is Made,'' Public Notice, 14 FCC Rcd 1085 (1999).

[115] ''Phase II 220 MHz Service Spectrum Auction Closes'', Public Notice, 14 FCC Rcd 11218 (1999).

[116] *See* Service Rules for the 746–764 MHz Bands, and Revisions to Part 27 of the Commission's Rules, WT Docket No. 99–168, *Second Report and Order,* 65 FR 17599 (April 4, 2000).

[117] *See generally* Public Notice, ''220 MHz Service Auction Closes,'' Report No. WT 98–36 (Wireless Telecommunications Bureau, October 23, 1998).

[118] ''700 MHz Guard Bands Auction Closes,'' Public Notice, DA 01–478 (rel. February 22, 2001).

[119] *220 MHz Third Report and Order,* 62 FR 16004 (April 3, 1997), at paragraphs 291–295.

[120] 700 MHz Guard Band Auction Closes,'' Public Notice, 15 FCC Rcd 18026 (2000).

[121] ''Revision of Part 22 and Part 90 of the Commission's Rules to Facilitate Future Development of Paging Systems,'' *Memorandum Opinion and Order on Reconsideration and Third Report and Order,* 14 FCC Rcd 10030, at paragraph 98–107 (1999).

[122] ''Revision of Part 22 and Part 90 of the Commission's Rules to Facilitate Future Development of Paging Systems,'' Memorandum Opinion and Order on Reconsideration and Third Report and Order, 14 FCC Rcd 10030, at paragraph 98 (1999).

[123] *See Telecommunications Provider Locater* at Table 1 (November 2001).

[124] *See generally* ''929 and 931 MHz Paging Auction Closes,'' Public Notice, 15 FCC Rcd 4858 (2000).

[125] *See* Amendment of Parts 20 and 24 of the Commission's Rules—Broadband PCS Competitive Bidding and the Commercial Mobile Radio Service Spectrum Cap, *Report and Order,* FCC 96–278, WT Docket No. 96–59 Sections 60 (released June 24, 1996), 61 FR 33859 (July 1, 1996).

[126] *See, e.g.,* Implementation of Section 309(j) of the Communications Act—Competitive Bidding, PP Docket No. 93–253, *Fifth Report and Order,* 9 FCC Rcd 5532, 5581–84 (1994).

[127] FCC News, *Broadband PCS, D, E and F Block Auction Closes,* No. 71744 (released January 14, 1997).

[128] *See* Amendment of the Commission's Rules Regarding Installment Payment Financing for Personal Communications Services (PCS) Licenses, Fourth Report and Order, 13 FCC Rcd 15743 at 15767–68, paragraphs 45–46 (1998).

[129] *See* Letter to Amy Zoslov, Chief, Auctions and Industry Analysis Division from A. Alvarez, Administrator, SBA (December 2, 1998).

Commission adopted a two-tiered definition of small businesses in the *Narrowband PCS Second Report and Order*.[130] A small business is an entity that, together with affiliates and controlling interests, has average gross revenues for the three preceding years of not more than $40 million. A very small business is an entity that, together with affiliates and controlling interests, has average gross revenues for the three preceding years of not more than $15 million. These definitions have been approved by the SBA.[131] In the future, the Commission will auction 459 licenses to serve Metropolitan Trading Areas (MTAs) and 408 response channel licenses. There is also one megahertz of narrowband PCS spectrum that has been held in reserve and that the Commission has not yet decided to release for licensing. The Commission cannot predict accurately the number of licenses that will be awarded to small entities in future auctions.

However, four of the 16 winning bidders in the two previous narrowband PCS auctions were small businesses, as that term was defined under the Commission's Rules. The Commission assumes, for purposes of this IRFA, that a large portion of the remaining narrowband PCS licenses will be awarded to small entities. The Commission also assumes that at least some small businesses will acquire narrowband PCS licenses by means of the Commission's partitioning and disaggregation rules.

38. *Rural Radiotelephone Service.* The Commission has not adopted a definition of small entity specific to the Rural Radiotelephone Service.[132] A significant subset of the Rural Radiotelephone Service is the Basic Exchange Telephone Radio Systems (BETRS).[133] We will use the SBA's definition applicable to radiotelephone (wireless) companies, i.e., an entity employing no more than 1,500 persons.[134] There are approximately 1,000 licensees in the Rural Radiotelephone Service, and we estimate that almost all of them qualify as small entities under the SBA's definition.

39. *Air-Ground Radiotelephone Service.* The Commission has not adopted a definition of small entity specific to the Air-Ground Radiotelephone Service.[135] We will use the SBA's definition applicable to radiotelephone (wireless) companies, *i.e.,* an entity employing no more than 1,500 persons.[136] There are approximately 100 licensees in the Air-Ground Radiotelephone Service, and we estimate that almost all of them qualify as small under the SBA definition.

40. *Specialized Mobile Radio (SMR).* Pursuant to 47 CFR 90.814(b)(1), the Commission has defined ''small business'' for purposes of auctioning 900 MHz SMR licenses, 800 MHz SMR licenses for the upper 200 channels, and 800 MHz SMR licenses for the lower 230 channels on the 800 MHz band, as a firm that has had average annual gross revenues of $15 million or less in the three preceding calendar years.[137] The SBA has approved this small business size standard for the 800 MHz and 900 MHz auctions.[138] Sixty winning bidders for geographic area licenses in the 900 MHz SMR band qualified as small business under the $15 million size standard. The auction of the 525 800 MHz SMR geographic area licenses for the upper 200 channels began on October 28, 1997, and was completed on December 8, 1997.[139] Ten winning bidders for geographic area licenses for the upper 200 channels in the 800 MHz SMR band qualified as small businesses under the $15 million size standard.[140] An auction of 800 MHz SMR geographic area licenses for the General Category channels began on August 16, 2000 and was completed on September 1, 2000. Of the 1,050 licenses offered in that auction, 1,030 licenses were sold. Eleven winning bidders for licenses for the General Category channels in the 800 MHz SMR band qualified as small business under the $15 million size standard. In an auction completed on December 5, 2000, a total of 2,800 Economic Area licenses in the lower 80 channels of the 800 MHz SMR service were sold. Of the 22 winning bidders, 19 claimed small business status. Thus, 40 winning bidders for geographic licenses in the 800 MHz SMR band qualified as small businesses. In addition, there are numerous incumbent site-by-site SMR licenses on the 800 and 900 MHz band.

41. These revised fees in the Report and Order apply to SMR providers in the 800 MHz and 900 MHz bands that either hold geographic area licenses or have obtained extended implementation authorizations. We do not know how many firms provide 800 MHz or 900 MHz geographic area SMR service pursuant to extended implementation authorizations, nor how many of these providers have annual revenues of no more than $15 million. One firm has over $15 million in revenues. We assume, for purposes of this FRFA, that all of the remaining existing extended implementation authorizations are held by small entities, as that term is defined by the SBA.

42. *Private Land Mobile Radio (PLMR).* PLMR systems serve an essential role in a range of industrial, business, land transportation, and public safety activities. These radios are used by companies of all sizes operating in all U.S. business categories. The Commission has not developed a definition of small entity specifically applicable to PLMR licensees due to the vast array of PLMR users. For the purpose of determining whether a licensee is a small business as defined by the SBA, each licensee would need to be evaluated within its own business area.

43. The Commission is unable at this time to estimate the number of small businesses which could be impacted by the rules. The Commission's 1994 Annual Report on PLMRs[141] indicates that at the end of fiscal year 1994 there were 1,087,267 licensees operating 12,481,989 transmitters in the PLMR bands below 512 MHz. Because any entity engaged in a commercial activity is eligible to hold a PLMR license, the revised rules in this context could potentially impact every small business in the United States.

44. *Amateur Radio Service.* We estimate that 8,000 applicants will apply for vanity call signs in FY 2001. These licensees are presumed to be individuals, and therefore not small entities. All other amateur licensees are exempt from payment of regulatory fees.

45. *Aviation and Marine Radio Service.* Small businesses in the aviation and marine radio services use a marine very high frequency (VHF) radio, any type of emergency position indicating radio beacon (EPIRB) and/or radar, a VHF aircraft radio, and/or any type of emergency locator transmitter (ELT). The Commission has not developed a definition of small entities specifically applicable to these small businesses. The applicable definition of small entity is the definition under the SBA rules for radiotelephone (wireless) communications.[142]

46. Most applicants for recreational licenses are individuals. Approximately 581,000 ship station licensees and 131,000 aircraft station licensees operate domestically and are not subject to the radio carriage requirements of any statute or treaty. For purposes of our evaluations and conclusions in this FRFA, we estimate that there may be at least 712,000 potential licensees which are individuals or are small entities, as that term is defined by the SBA. We estimate that only 16,800 will be subject to FY 2001 regulatory fees.

47. *Fixed Microwave Services.* Microwave services include common carrier,[143] private-operational fixed,[144] and broadcast auxiliary radio services.[145] At present, there are

[130] In the Matter of Amendment of the Commission's Rules to Establish New Personal Communications Services, Narrowband PCS, Docket No. ET 92–100, Docket No. PP93–253, *Second Report and Order and Second Further Notice of Proposed Rulemaking*, 65 FR 35875 (June 6, 2000).

[131] *See* Letter to Amy Zoslov, Chief, Auctions and Industry Analysis Division from A. Alvarez, Administrator, SBA (December 2, 1998).

[132] The service is defined in § 22.99 of the Commission's Rules, 47 CFR 22.99.

[133] BETRS is defined in §§ 22.757 and 22.759 of the Commission's Rules, 47 CFR 22.757 and 22.759.

[134] 13 CFR 121.201, NAICS codes 513321, 513322, and 51333.

[135] The service is defined in § 22.99 of the Commission's Rules, 47 CFR 22.99.

[136] 13 CFR 121.201, NAICS codes 513321, 513322, and 51333.

[137] 47 CFR 90.814(b)(1).

[138] *See* Letter to Thomas J. Sugrue, Chief, Wireless Telecommunications Bureau (FCC) from A. Alvarez, Administrator, SBA (August 10, 1999).

[139] *See* Letter to Daniel B. Phython, Chief, Wireless Telecommunications Bureau (FCC) from A. Alvarez, Administrator, SBA (October 27, 1997).

[140] *Id.*

[141] Federal Communications Commission, *60th Annual Report, Fiscal Year 1994*, at paragraph 116.

[142] 13 CFR 121.201, NAICS codes 513321, 513322, and 51333.

[143] 47 CFR 101 *et seq.* (formerly, part 21 of the Commission's Rules).

[144] Persons eligible under parts 80 and 90 of the Commission's rules can use Private Operational-Fixed Microwave services. *See* 47 CFR parts 80 and 90. Stations in this service are called operational-fixed to distinguish them from common carrier and public fixed stations. Only the licensee may use the operational-fixed station, and only for communications related to the licensee's commercial, industrial, or safety operations.

[145] Auxiliary Microwave Service is governed by part 74 of Title 47 of the Commission's Rules. *See*

approximately 22,015 common carrier fixed licensees and 61,670 private operational-fixed licensees and broadcast auxiliary radio licensees in the microwave services. The Commission has not yet defined a small business with respect to microwave services. For purposes of this FRFA, we will use the SBA's definition applicable to radiotelephone (wireless) companies—*i.e.,* an entity with no more than 1,500 persons. [146] We estimate that all of the Fixed Microwave licensees (excluding broadcast auxiliary licensees) would qualify as small entities under the SBA definition for radiotelephone (wireless) companies.

48. *Public Safety Radio Services*. Public Safety radio services include police, fire, local government, forestry conservation, highway maintenance, and emergency medical services. [147] There are a total of approximately 127,540 licensees within these services. Governmental entities [148] as well as private businesses comprise the licensees for these services. As indicated *supra* in paragraph four of this FRFA, all governmental entities with populations of less than 50,000 fall within the definition of a small entity. [149] All licensees in this category are exempt from the payment of regulatory fees.

49. *Personal Radio Services*. Personal radio services provide short-range, low power radio for personal communications, radio signaling, and business communications not provided for in other services. The services include the citizen's band (CB) radio service, general mobile radio service (GMRS), radio control radio service, and family radio service (FRS). [150] Since the CB, GMRS, and FRS licensees are individuals, no small business definition applies for these services. We are unable at this time to estimate the number of other licensees that would qualify as small under the SBA's definition; however, only GMRS licensees are subject to regulatory fees.

50. *Offshore Radiotelephone Service*. This service operates on several UHF TV broadcast channels that are not used for TV broadcasting in the coastal areas of states bordering the Gulf of Mexico. [151] There are presently approximately 55 licensees in this service. We are unable to estimate at this time the number of licensees that would qualify as small under the SBA's definition for radiotelephone (wireless) communications.

51. *Wireless Communications Services*. This service can be used for fixed, mobile, radiolocation and digital audio broadcasting satellite uses. The Commission defined ''small business'' for the wireless communications services (WCS) auction as an entity with average gross revenues of $40 million for each of the three preceding years, and a ''very small business'' as an entity with average gross revenues of $15 million for each of the three preceding years. The SBA has approved these definitions. [152] The FCC auctioned geographic area licenses in the WCS service. In the auction, there were seven winning bidders that qualified as very small business entities, and one that qualified as a small business entity. We conclude that the number of geographic area WCS licensees affected includes these eight entities.

52. *39 GHz Service*. The Commission defined ''small entity'' for 39 GHz licenses as an entity that has average gross revenues of less than $40 million in the three previous calendar years. [153] An additional classification for ''very small business'' was added and is defined as an entity that, together with their affiliates, has average gross revenues of not more than $15 million for the preceding three calendar years. [154] These regulations defining ''small entity'' in the context of 39 GHz auctions have been approved by the SBA. The auction of the 2,173 39 GHz licenses began on April 12, 2000 and closed on May 8, 2000. The 18 bidders who claimed small business status won 849 licenses.

53. *Local Multipoint Distribution Service*. The auction of the 1,030 Local Multipoint Distribution Service (LMDS) licenses began on February 18, 1998 and closed on March 25, 1998. The Commission defined ''small entity'' for LMDS licenses as an entity that has average gross revenues of less than $40 million in the three previous calendar years. [155] An additional classification for ''very small business'' was added and is defined as an entity that, together with its affiliates, has average gross revenues of not more than $15 million for the preceding three calendar years. [156] These regulations defining ''small entity'' in the context of LMDS auctions have been approved by the SBA. [157] There were 93 winning bidders that qualified as small entities in the LMDS auctions. A total of 93 small and very small business bidders won approximately 277 A Block licenses and 387 B Block licenses. On March 27, 1999, the Commission re-auctioned 161 licenses; there were 40 small business winning bidders. Based on this information, we conclude that the number of small LMDS licenses will include the 93 winning bidders in the first auction and the 40 winning bidders in the re-auction, for a total of 133 small entity LMDS providers as defined by the SBA and the Commission's auction rules.

54. *218–219 MHz Service*. The first auction of 218–219 MHz spectrum resulted in 170 entities winning licenses for 595 Metropolitan Statistical Area (MSA) licenses. Of the 594 licenses, 557 were won by entities qualifying as a small business. For that auction, we defined a small business as an entity that, together with its affiliates, has no more than a $6 million net worth and, after federal income taxes (excluding any carry over losses), has no more than $2 million in annual profits each year for the previous two years. [158] *In the 218–219 MHz Report and Order and Memorandum Opinion and Order,* we defined a small business as an entity that, together with its affiliates and persons or entities that hold interests in such an entity and their affiliates, has average annual gross revenues not to exceed $15 million for the preceding three years. [159] A very small business is defined as an entity that, together with its affiliates and persons or entities that hold interests in such an entity and its affiliates, has average annual gross revenues

47 CFR 74 *et seq.* Available to licensees of broadcast stations and to broadcast and cable network entities, broadcast auxiliary microwave stations are used for relaying broadcast television signals from the studio to the transmitter, or between two points such as a main studio and an auxiliary studio. The service also includes mobile TV pickups, which relay signals from a remote location back to the studio.

[146] 13 CFR 121.201, NAICS codes 513321, 513322, 51333.

[147] With the exception of the special emergency service, these services are governed by Subpart B of part 90 of the Commission's Rules, 47 CFR 90.15 through 90.27. The police service includes 26,608 licensees that serve state, county, and municipal enforcement through telephony (voice), telegraphy (code) and teletype and facsimile (printed material). The fire radio service includes 22,677 licensees comprised of private volunteer or professional fire companies as well as units under governmental control. The local government service that is presently comprised of 40,512 licensees that are state, county, or municipal entities that use the radio for official purposes not covered by other public safety services. There are 7,325 licensees within the forestry service which is comprised of licensees from state departments of conservation and private forest organizations who set up communications networks among fire lookout towers and ground crews. The 9,480 state and local governments are licensed to highway maintenance service provide emergency and routine communications to aid other public safety services to keep main roads safe for vehicular traffic. The 1,460 licensees in the Emergency Medical Radio Service (EMRS) use the 39 channels allocated to this service for emergency medical service communications related to the delivery of emergency medical treatment. 47 CFR 90.15 through 90.27. The 19,478 licensees in the special emergency service include medical services, rescue organizations, veterinarians, handicapped persons, disaster relief organizations, school buses, beach patrols, establishments in isolated areas, communications standby facilities, and emergency repair of public communications facilities. 47 CFR 90.33 through 90.55.

[148] 47 CFR 1.1162.

[149] 5 U.S.C. 601(5).

[150] Licensees in the Citizens Band (CB) Radio Service, General Mobile Radio Service (GMRS), Radio Control (R/C) Radio Service and Family Radio Service (FRS) are governed by Subpart D, Subpart A, Subpart C, and Subpart B, respectively, of part 95 of the Commission's Rules. 47 CFR 95.401 through 95.428; 95.1 through 95.181; 95.201 through 95.225; 47 CFR 95.191 through 95.194.

[151] This service is governed by subpart I of part 22 of the Commission's Rules. *See* 47 CFR 22.1001 through 22.1037.

[152] *See* Letter to Amy Zoslov, Chief, Auctions and Industry Analysis Division from A. Alvarez, Administrator, SBA (December 2, 1998).

[153] *See* In the Matter of Amendment of the Commission's Rules Regarding the 37.0–38.6 GHz and 38.6–40.0 GHz Band, Report and Order, 12 FCC Rcd 18600 (1997).

[154] *Id.*

[155] See Local Multipoint Distribution Service, Second Report and Order, 62 FR 23148, April 29, 1997.

[156] *Id.*

[157] *See* Letter to Daniel Phythyon, Chief, Wireless Telecommunications Bureau (FCC) from A. Alvarez, Administrator, SBA (January 6, 1998).

[158] Implementation of Section 309(j) of the Communications Act—Competitive Bidding, PP WT Docket No. 93–253, *Fourth Report and Order,* 59 FR 24947 (May 13, 1994).

[159] In the Matter of Amendment of Part 95 of the Commission's Rules to Provide Regulatory Flexibility in the 218–219 MHz Service, WT Docket No. 98–169, *Report and Order and Memorandum Opinion and Order,* 64 FR 59656 (November 3, 1999).

not to exceed $3 million for the preceding three years. [160] We cannot estimate, however, the number of licenses that will be won by entities qualifying as small or very small businesses under our rules in future auctions of 218–219 MHz spectrum. Given the success of small businesses in the previous auction, and the above discussion regarding the prevalence of small businesses in the subscription television services and message communications industries, we assume for purposes of this IRFA that in future auctions, all of the licenses may be awarded to small businesses by these revised rules.

III. Description of Projected Reporting, Recordkeeping and Other Compliance Requirements

55. With certain exceptions, the Commission's Schedule of Regulatory Fees applies to all Commission licensees and regulatees. Most licensees will be required to count the number of licenses or call signs authorized, complete and submit an FCC Form 159 (''FCC Remittance Advice''), and pay a regulatory fee based on the number of licenses or call signs. [161] Interstate telephone service providers must compute their annual regulatory fee based on their interstate and international end-user revenue using information they already supply to the Commission in compliance with the Form 499-A, Telecommunications Reporting Worksheet, and they must complete and submit the FCC Form 159. Compliance with the fee schedule will require some licensees to tabulate the number of units (*e.g.*, cellular telephones, pagers, cable TV subscribers) they have in service, and complete and submit an FCC Form 159. Licensees ordinarily will keep a list of the number of units they have in service as part of their normal business practices. No additional outside professional skills are required to complete the FCC Form 159, and it can be completed by the employees responsible for an entity's business records.

56. Each licensee must submit the FCC Form 159 to the Commission's lockbox bank after computing the number of units subject to the fee. Licensees may also file electronically to minimize the burden of submitting multiple copies of the FCC Form 159. Applicants who pay small fees in advance and provide fee information as part of their application must use FCC Form 159.

57. Licensees and regulatees are advised that failure to submit the required regulatory fee in a timely manner will subject the licensee or regulatee to a late payment penalty of 25 percent in addition to the required fee. [162] If payment is not received, new or pending applications may be dismissed, and existing authorizations may be subject to rescission. [163] Further, in accordance with the Debt Collection Improvement Act of 1996, federal agencies may bar a person or entity from obtaining a federal loan or loan insurance guarantee if that person or entity fails to pay a delinquent debt owed to any federal agency. [164] Nonpayment of regulatory fees is a debt owed the United States pursuant to 31 U.S.C. 3711 *et seq.*, and the *Debt Collection Improvement Act of 1996,* Public Law 194–134. Appropriate enforcement measures as well as administrative and judicial remedies, may be exercised by the Commission. Debts owed to the Commission may result in a person or entity being denied a federal loan or loan guarantee pending before another federal agency until such obligations are paid. [165]

58. The Commission's rules currently provide for relief in exceptional circumstances. Persons or entities may request a waiver, reduction or deferment of payment of the regulatory fee. [166] However, timely submission of the required regulatory fee must accompany requests for waivers or reductions. This will avoid any late payment penalty if the request is denied. The fee will be refunded if the request is granted. In exceptional and compelling instances (where payment of the regulatory fee along with the waiver or reduction request could result in reduction of service to a community or other financial hardship to the licensee), the Commission will defer payment in response to a request filed with the appropriate supporting documentation.

IV. Steps Taken To Minimize Significant Economic Impact on Small Entities, and Significant Alternatives Considered

59. The RFA requires an agency to describe any significant alternatives that it has considered in reaching its proposed approach, which may include the following four alternatives: (1) The establishment of differing compliance or reporting requirements or timetables that take into account the resources available to small entities; (2) the clarification, consolidation, or simplification of compliance or reporting requirements under the rule for small entities; (3) the use of performance, rather than design, standards; and (4) an exemption from coverage of the rule, or any part thereof, for small entities. As described in Section IV of this IRFA, *supra,* we have created procedures in which all fee-filing licensees and regulatees use a single form, FCC Form 159, and have described in plain language the general filing requirements. We have also created Attachment F, *infra*, which gives ''Detailed Guidance on Who Must Pay Regulatory Fees.'' Because the collection of fees is statutory, our efforts at proposing alternatives are constrained and, throughout these annual fee proceedings, have been largely directed toward simplifying the instructions and necessary procedures for all filers. We have sought comment on other alternatives that might simplify our fee procedures or otherwise benefit small entities, while remaining consistent with our statutory responsibilities in this proceeding.

60. *The Omnibus Consolidated and Emergency Supplemental Appropriations Act for FY 2000,* Public Law 106–553, requires the Commission to revise its Schedule of Regulatory Fees in order to recover the amount of regulatory fees that Congress, pursuant to Section 9(a) of the Communications Act, as amended, has required the Commission to collect for Fiscal Year (FY) 2002.[167] As noted, we have previously sought comment on the proposed methodology for implementing these statutory requirements and any other potential impact of these proposals on small entities.

61. With the use of actual cost accounting data for computation of regulatory fees, we found that some fees which were very small in previous years would have increased dramatically and would have a disproportionate impact on smaller entities. The methodology we are adopting in this *Report and Order* minimizes this impact by limiting the amount of increase and shifting costs to other services which, for the most part, are larger entities.

62. Several categories of licensees and regulatees are exempt from payment of regulatory fees. *See, e.g.,* footnote 161, *supra*, and Attachment F of the *Report and Order, infra.*

Report to Small Business Administration: The Commission will send a copy of this *Report and Order,* including a copy of the FRFA to the Chief Counsel for Advocacy of the Small Business Administration. The Report and Order and FRFA (or summaries thereof) will also be published in the **Federal Register**.

Report to Congress: The Commission will send a copy of this Final Regulatory Flexibility Analysis, along with this *Report and Order,* in a report to Congress pursuant to the Congressional Review Act, 5 U.S.C. 801(a)(1)(A).

[160] Amendment of Part 95 of the Commission's Rules to Provide Regulatory Flexibility in the 218–219 MHz Service, Report and Order and Memorandum Opinion and Order, 64 FR 59656 (1999).

[161] The following categories are exempt from the Commission's Schedule of Regulatory Fees: Amateur radio licensees (except applicants for vanity call signs) and operators in other non-licensed services (*e.g.,* Personal Radio, part 15, ship and aircraft). Governments and non-profit (exempt under section 501(c) of the Internal Revenue Code) entities are exempt from payment of regulatory fees and need not submit payment. Non-commercial educational broadcast licensees are exempt from regulatory fees as are licensees of auxiliary broadcast services such as low power auxiliary stations, television auxiliary service stations, remote pickup stations and aural broadcast auxiliary stations where such licenses are used in conjunction with commonly owned non-commercial educational stations. Emergency Alert System licenses for auxiliary service facilities are also exempt as are instructional television fixed service licensees. Regulatory fees are automatically waived for the licensee of any translator station that: (1) is not licensed to, in whole or in part, and does not have common ownership with, the licensee of a commercial broadcast station; (2) does not derive income from advertising; and (3) is dependent on subscriptions or contributions from members of the community served for support. Receive only earth station permittees are exempt from payment of regulatory fees. A regulatee will be relieved of its fee payment requirement if its total fee due, including all categories of fees for which payment is due by the entity, amounts to less than $10.

[162] 47 CFR 1.1164.

[163] 47 CFR 1.1164(c).

[164] Public Law 104–134, 110 Stat. 1321 (1996).

[165] 31 U.S.C. 7701(c)(2)(B).

[166] 47 CFR 1.1166.

[167] 47 U.S.C. 159(a).

Attachment B—Sources of Payment Unit Estimates for FY 2002

In order to calculate individual service fees for FY 2002, we adjusted FY 2001 payment units for each service to more accurately reflect expected FY 2002 payment liabilities. We obtained our updated estimates through a variety of means. For example, we used Commission licensee data bases, actual prior year payment records and industry and trade association projections when available. We tried to obtain verification for these estimates from multiple sources and, in all cases, we compared FY 2002 estimates with actual FY 2001 payment units to ensure that our revised estimates were reasonable. Where appropriate, we adjusted and/or rounded our final estimates to take into consideration the fact that certain variables that impact on the number of payment units cannot yet be estimated exactly. These include an unknown number of waivers and/or exemptions that may occur in FY 2002 and the fact that, in many services, the number of actual licensees or station operators fluctuates from time to time due to economic, technical or other reasons. Therefore, when we note, for example, that our estimated FY 2002 payment units are based on FY 2001 actual payment units, it does not necessarily mean that our FY 2002 projection is *exactly* the same number as FY 2001. It means that we have either rounded the FY 2002 number or adjusted it slightly to account for these variables.

Fee category	Sources of payment unit estimates
Land Mobile (All), Microwave, 218–219 MHz,[168] Marine (Ship & Coast), Aviation (Aircraft & Ground), GMRS, Amateur Vanity Call Signs, Domestic Public Fixed.	Based on Wireless Telecommunications Bureau (WTB) projections of new applications and renewals taking into consideration existing Commission licensee data bases. Aviation (Aircraft) and Marine (Ship) estimates have been adjusted to take into consideration the licensing of portions of these services on a voluntary basis.
CMRS Mobile Services	Based on Wireless Telecommunications Bureau estimates.
CMRS Messaging Services	Based on Wireless Telecommunications Bureau estimates.
AM/FM Radio Stations	Based on estimates from Mass Media Bureau estimates.
UHF/VHF Television Stations	Based on Mass Media Bureau estimates and actual FY 2001 payment units.
AM/FM/TV Construction Permits	Based on Mass Media Bureau estimates and actual FY 2001 payment units.
LPTV, Translators Boosters	Based on actual FY 2001 payment units.
Auxiliaries	Based on Wireless Telecommunications Bureau estimates.
MDS/LMDS/MMDS	Based on Mass Media Bureau estimates.
Cable Antenna Relay Device (CARS)	Based on Wireline Competition Bureau (previously Cable Services Bureau) estimates.
Cable Television System Subscribers	Based on Wireline Competition Bureau (previously Cable Services Bureau) and industry estimates of subscribership.
Interstate Telecommunication Service Providers	Based on actual FY 2001 interstate revenues reported on Telecommunications Reporting Worksheet, adjusted for FY 2002 revenue growth for industry as estimated by Wireline Competition Bureau.
Earth Stations	Based on International Bureau estimates.
Space Stations (GSOs & NGSOs)	Based on International Bureau licensee data bases.
International Bearer Circuits	Based on International Bureau estimates.
International HF Broadcast Stations, International Public Fixed Radio Service.	Based on International Bureau estimates.

[168] The Wireless Telecommunications Bureau's staff advises that they anticipate receiving only 25 applications for 218–219 MHz (formerly IVDS) in FY 2001.

Fee category	FY 2002 payment units	Payment years	FY 2001 revenue estimate	Pro-rated FY 2002 revenue requirement	Computed new FY 2002 regulatory fee	Rounded new FY 2002 regulatory fee	Expected Fy 2002 revenue
PLMRS (Exclusive Use)	4,100	10	275,000	300,575	7	5	205,000
PLMRS (Shared use)	43,500	10	2,900,000	3,169,700	7	5	2,175,000
Microwave	11,500	10	1,195,000	1,306,135	11	10	1,150,000
218–219 MHz (Formerly IVDS)	5	10	1,250	1,366	27	25	1,250
Marine (Ship)	5,200	10	550,000	601,150	12	10	520,000
GMRS	3,180	5	50,000	54,650	3	5	79,500
Aviation (Aircraft)	2,700	10	175,000	191,275	7	5	135,000
Marine (Coast)	900	10	65,000	71,045	8	10	90,000
Aviation (Ground)	2,000	5	85,000	92,905	9	10	100,000
Amateur Vanity Call Signs	9,000	10	120,000	131,160	1.46	1.45	130,500
AM Class A	76	1	146,300	159,906	2,104	2,100	159,600
AM Class B	1,672	1	1,806,300	1,974,286	1,181	1,175	1,964,600
AM Class C	990	1	618,760	676,305	683	685	678,150
AM Class D	1,933	1	2,033,850	2,222,998	1,150	1,150	2,222,950
FM Classes A, B1 & C3	3,192	1	4,160,000	4,546,880	1,424	1,425	4,548,600
FM Classes B, C, C1 & C2	2,956	1	5,166,300	5,646,766	1,910	1,900	5,616,400
AM Construction Permits	48	1	16,240	17,750	370	370	17,760
FM Construction Permits	202	1	277,500	303,308	1,502	1,500	303,000
Satellite TV	128	1	93,980	102,720	803	805	103,040
Satellite TV Construction Permit	5	1	1,920	2,099	420	420	2,100
VHF Markets 1–10	44	1	1,894,200	2,070,361	47,054	47,050	2,070,200

Fee category	FY 2002 payment units	Payment years	FY 2001 revenue estimate	Pro-rated FY 2002 revenue requirement	Computed new FY 2002 regulatory fee	Rounded new FY 2002 regulatory fee	Expected Fy 2002 revenue
VHF Markets 11–25	61	1	1,936,675	2,116,786	34,701	34,700	2,116,700
VHF Markets 26–50	76	1	1,642,025	1,794,733	23,615	23,625	1,795,500
VHF Markets 51–100	114	1	1,581,250	1,728,306	15,161	15,150	1,727,100
VHF Remaining Markets	215	1	691,025	755,290	3,513	3,525	757,875
VHF Construction Permits	22	1	55,350	60,498	2,750	2,750	60,500
UHF Markets 1–10	97	1	1,136,250	1,241,921	12,803	12,800	1,241,600
UHF Markets 11–25	98	1	922,500	1,008,293	10,289	10,300	1,009,400
UHF Markets 26–50	129	1	778,250	850,627	6,594	6,600	851,400
UHF Markets 51–100	190	1	672,375	734,906	3,868	3,875	736,250
UHF Remaining Markets	206	1	201,250	219,966	1,068	1,075	221,450
UHF Construction Permits	59	1	280,000	306,040	5,187	5,175	305,325
Auxiliaries	24,000	1	270,000	295,110	12	10	240,000
International HF Broadcast	6	1	2,720	2,973	495	495	2,970
LPTV/Translators/Boosters	2,800	1	823,500	900,086	321	320	896,000
CARS	1,600	1	93,500	102,196	64	65	104,000
Cable Systems	68,980,000	1	33,431,844	36,541,005	0.53	0.53	36,541,005
Interstate Telecommunication Service Providers	66,544,000,000	1	93,387,376	102,072,402	0.00153	0.00153	102,072,402
CMRS Mobile Services (Cellular/Public Mobile)	125,000,000	1	27,404,520	29,953,140	0.24	0.24	29,953,140
CMRS Messaging Services	23,600,000	1	1,625,054	1,776,184	0.08	0.08	1,776,184
MDS/MMDS/LMDS	2,300	1	900,000	983,700	428	430	989,000
International Bearer Circuits	2,830,000	1	4,202,255	4,593,065	1.62	2	5,660,000
International Public Fixed	1	1	1,275	1,394	1,394	1,400	1,400
Earth Stations	3,873	1	501,120	547,724	141	140	542,220
Space Stations (Geostationary)	71	1	6,476,250	7,078,541	99,698	99,700	7,078,700
Space Stations (Non-geostationary)	6	1	566,550	619,239	103,207	103,200	619,200
Total Estimated Revenue to be Collected			201,214,514	219,927,464			219,571,972
Total Revenue Requirement				218,757,000			218,757,000
Difference				1,170,464			814,972

Note.—1.093 factor applied based on the amount Congress designated for recovery through regulatory fees (Public Law 107–77 and 47 U.S.C. 159(a)(2)).

Attachment D—FY 2002 Schedule of Regulatory Fees

Fee category	Annual regulatory fee
PLMRS (per license) (Exclusive Use) (47 CFR part 90)	$5
Microwave (per license) (47 CFR part 101)	10
218–219 MHz (Formerly Interactive Video Data Service) (per license) (47 CFR part 95)	25
Marine (Ship) (per station) (47 CFR part 80)	10
Marine (Coast) (per license) (47 CFR part 80)	10
General Mobile Radio Service (per license) (47 CFR part 95)	5
Rural Radio (47 CFR part 22) (previously listed under the Land Mobile category)	5
PLMRS (Shared Use) (per license) (47 CFR part 90)	5
Aviation (Aircraft) (per station) (47 CFR part 87)	5
Aviation (Ground) (per license) (47 CFR part 87)	10
Amateur Vanity Call Signs (per call sign) (47 CFR part 97)	1.45
CMRS Mobile Services (per unit) (47 CFR parts 20, 22, 24, 27, 80 and 90)	.24
CMRS Messaging Services (per unit) (47 CFR parts 20, 22, 24 and 90)	.08
Multipoint Distribution Services (MMDS, LMDS & MDS) (per call sign) (47 CFR part 21)	430
AM Radio Construction Permits	370

Fee category	Annual regulatory fee
FM Radio Construction Permits	1,500
TV (47 CFR part 73) VHF Commercial:	
Markets 1–10	47,050
Markets 11–25	34,700
Markets 26–50	23,625
Markets 51–100	15,150
Remaining Markets	3,525
Construction Permits	2,750
TV (47 CFR part 73) UHF Commercial:	
Markets 1–10	12,800
Markets 11–25	10,300
Markets 26–50	6,600
Markets 51–100	3,875
Remaining Markets	1,075
Construction Permits	5,175
Satellite Television Stations (All Markets)	805
Construction Permits—Satellite Television Stations	420
Low Power TV, TV/FM Translators & Boosters (47 CFR part 74)	320
Broadcast Auxiliary (47 CFR part 74)	10
CARS (47 CFR part 78)	65
Cable Television Systems (per subscriber) (47 CFR part 76)	.53
Interstate Telecommunication Service Providers (per revenue dollar)	.00153
Earth Stations (47 CFR part 25)	140
Space Stations (per operational station in geostationary orbit) (47 CFR part 25) also includes Direct Broadcast Satellite Service (per operational station) (47 CFR part 100)	99,700
Space Stations (per operational system in non-geostationary orbit) (47 CFR part 25)	103,200
International Bearer Circuits (per active 64KB circuit)	2
International Public Fixed (per call sign) (47 CFR part 23)	1,400
International (HF) Broadcast (47 CFR part 73)	495

FY 2002 RADIO STATION REGULATORY FEES

Population Served	AM Class A	AM Class B	AM Class C	AM Class D	FM Classes A, B1 & C3	FM Classes B, C, C1 & C2
<=20,000	500	375	275	325	375	500
20,001–50,000	925	725	375	525	725	925
50.001–125,000	1,500	975	525	775	975	1,500
125,001–400,000	2,250	1,575	800	950	1,575	2,250
400,001–1,000,000	3,125	2,525	1,425	1,700	2,525	3,125
>1,000,000	4,975	4,100	2,075	2,625	4,100	4,975

Attachment E—Comparison Between FY 2001, FY 2002 Proposed and Final Regulatory Fees

Fee category	Annual regulatory fee FY 2001	NPRM proposed fee FY 2002	Annual regulatory fee FY 2002
PLMRS (per license) (Exclusive Use) (47 CFR part 90)	5	5	5
Microwave (per license) (47 CFR part 101)	5	10	10
218–219 MHz (Formerly Interactive Video Data Service) (per license) (47 CFR part 95)	10	25	25
Marine (Ship) (per station) (47 CFR part 80)	10	10	10
Marine (Coast) (per license) (47 CFR part 80)	5	10	10
General Mobile Radio Service (per license) (47 CFR part 95)	5	5	5
Rural Radio (47 CFR part 22) (previously listed under Land Mobile)	5	5	5
PLMRS (Shared Use) (47 CFR part 90)	5	5	5
Aviation (Aircraft) (per station) (47 CFR part 87)	5	5	5
Aviation (Ground) (per license) (47 CFR part 87)	10	10	10
Amateur Vanity Call Signs (per call sign) (47 CFR part 97)	1.20	1.45	1.45
CMRS Mobile Services (per unit) (47 CFR parts 20, 22, 24, 27, 80 and 90)	.27	.24	.24
CMRS Messaging Services (per unit) (47 CFR parts 20, 22, 24 and 90)	.05	.08	.08
Multipoint Distribution Services (Includes MMDS, LMDS & MDS) (per call sign) (47 CFR part 21)	450	430	430
AM Construction Permits	280	370	370
FM Construction Permits	925	1,500	1,500
TV (47 CFR part 73) VHF Commercial:			
Markets 1–10	45,100	47,050	47,050
Markets 11–25	32,825	34,700	34,700
Markets 26–50	21,325	23,625	23,625
Markets 51–100	13,750	15,150	15,150
Remaining Markets	3,275	3,525	3,525
Construction Permits	3,075	2,750	2,750

Fee category	Annual regulatory fee FY 2001	NPRM proposed fee FY 2002	Annual regulatory fee FY 2002
TV (47 CFR part 73) UHF Commercial:			
Markets 1–10	15,150	12,800	12,800
Markets 11–25	12,300	10,300	10,300
Markets 26–50	7,075	6,600	6,600
Markets 51–100	4,075	3,875	3,875
Remaining Markets	1,150	1,075	1,075
Construction Permits	4,000	5,175	5,175
Satellite Television Stations (All Markets)	740	805	805
Construction Permits—Satellite Television Stations	480	420	420
Low Power TV, TV/FM Translators & Boosters (47 CFR part 74)	305	320	320
Broadcast Auxiliary (47 CFR part 74)	10	10	10
CARS (47 CFR part 78)	55	65	65
Earth Stations (47 CFR part 25)	180	140	140
Cable Television Systems (per subscriber) (47 CFR part 76)	.49	.53	.53
Interstate Telecommunication Service Providers (per revenue dollar)	.00132	.00153	.00153
Space Stations (per operational station in geostationary orbit) (47 CFR part 25) also includes Direct Broadcast Satellite Service (per operational station) (47 CFR part 100)	98,125	99,700	99,700
Space Stations (per operational system in non-geostationary orbit) (47 CFR part 25)	94,425	123,850	103,200
International Bearer Circuits (per active 64KB circuit)	5	2	2
International Public Fixed (per call sign) (47 CFR part 23)	1,275	1,400	1,400
International (HF) Broadcast (47 CFR part 73)	680	495	495

FY 2001 RADIO STATION REGULATORY FEES

Population served	AM Class A	AM Class B	AM Class C	AM Class D	FM Classes A, B1 & C3	FM Classes B, C, C1 & C2
<=20,000	450	350	250	300	350	450
20,001–50,000	850	675	350	475	675	850
50.001–125,000	1,375	900	475	700	900	1,375
125,001–400,000	2,050	1,450	725	875	1,450	2,050
400,001–1,000,000	2,850	2,300	1,300	1,550	2,300	2,850
>1,000,000	4,550	3,750	1,900	2,400	3,750	4,550

FY 2001 RADIO STATION REGULATORY FEES

Population served	AM Class A	AM Class B	AM Class C	AM Class D	FM Classes A, B1 & C3	FM Classes B, C, C1 & C2
<=20,000	500	375	275	325	375	500
20,001–50,000	925	725	375	525	725	925
50.001–125,000	1,500	975	525	775	975	1,500
125,001–400,000	2,250	1,575	800	950	1,575	2,250
400,001–1,000,000	3,125	2,525	1,425	1,700	2,525	3,125
>1,000,000	4,975	4,100	2,075	2,625	4,100	4,975

Attachment F—Detailed Guidance on Who Must Pay Regulatory Fees

1. The guidelines below provide an explanation of regulatory fee categories established by the Schedule of Regulatory Fees in section 9(g) of the Communications Act,[169] as modified in the instant *Report and Order.* Where regulatory fee categories need interpretation or clarification, we have relied on the legislative history of section 9, our own experience in establishing and regulating the Schedule of Regulatory Fees for Fiscal Years (FY) 1994 through 2001, and the services subject to the fee schedule. The categories and amounts set out in the schedule have been modified to reflect changes in the number of payment units, additions and changes in the services subject to the fee requirement and the benefits derived from the Commission's regulatory activities, and to simplify the structure of the schedule. The schedule may be similarly modified or adjusted in future years to reflect changes in the Commission's budget and in the services regulated by the Commission.[170]

2. *Exemptions.* Governments and nonprofit entities are exempt from paying regulatory fees and should not submit payment. A nonprofit entity is required to have on file with the Commission an IRS Determination Letter documenting that it is exempt from taxes under section 501 of the Internal Revenue Code or the certification of a governmental authority attesting to its nonprofit status. In instances where the IRS Determination Letter or the letter of certification from a governmental authority attesting to its nonprofit status is not sufficiently current, the nonprofit entity may be asked to submit more current documentation. The governmental exemption applies even where the government-owned or community-owned facility is in competition with a commercial operation. Other specific exemptions are discussed below in the descriptions of other particular service categories.

[169] 47 U.S.C. 159(g).

[170] 47 U.S.C. 159(b)(2), (3).

1. Private Wireless Radio Services

3. Two levels of statutory fees were established for the Private Wireless Radio Services—exclusive use services and shared use services. Thus, licensees who generally receive a higher quality communication channel due to exclusive or lightly shared frequency assignments will pay a higher fee than those who share marginal quality assignments. This dichotomy is consistent with the directive of section 9, that the regulatory fees reflect the benefits provided to the licensees.[171] In addition, because of the generally small amount of the fees assessed against Private Wireless Radio Service licensees, applicants for new licenses and reinstatements and for renewal of existing licenses are required to pay a regulatory fee covering the entire license term, with only a percentage of all licensees paying a regulatory fee in any one year. Applications for modification or assignment of existing authorizations do not require the payment of regulatory fees. The expiration date of those authorizations will reflect only the unexpired term of the underlying license rather than a new license term.

a. Exclusive Use Services

4. *Private Land Mobile Radio Services (PLMRS) (Exclusive Use):* Regulatees in this category include those authorized under part 90 of the Commission's Rules to provide limited access Wireless Radio service that allows high quality voice or digital communications between vehicles or to fixed stations to further the business activities of the licensee. These services, using the 220–222 MHz band and frequencies at 470 MHz and above, may be offered on a private carrier basis in the Specialized Mobile Radio Services (SMRS).[172] For FY 2002, PLMRS licensees will pay a $5 annual regulatory fee per license, payable for an entire ten-year license term at the time of application for a new, renewal, or reinstatement license.[173] The total regulatory fee due is $50 for the ten-year term.

5. *Microwave Services:* These services include private and commercial microwave systems and private and commercial carrier systems authorized under part 101 of the Commission's Rules to provide telecommunications services between fixed points on a high quality channel of communications. Microwave systems are often used to relay data and to control railroad, pipeline, and utility equipment. Commercial systems typically are used for video or data transmission or distribution. For FY 2002, Microwave licensees will pay a $10 annual regulatory fee per license, payable for an entire ten-year license term at the time of application for a new, renewal, or reinstatement license. The total regulatory fee due is $100 for the ten-year license term.

6. *218–219 MHz (Formerly Interactive Video Data Service (IVDS)):* The 218–219 MHz service is a two-way, point-to-multi-point radio service allocated high quality channels of communications and authorized under part 95 of the Commission's Rules. The 218–219 MHz service provides information, products, and services, and also the capability to obtain responses from subscribers in a specific service area. The 218–219 MHz service is offered on a private carrier basis. The Commission anticipated receiving 25 applications in the 218–219 MHz service during FY 2001. For FY 2002, we anticipate receiving five applications and propose that the annual regulatory fee for 218–219 MHz licensees be set at $25 per application. The total regulatory fee due would be $250 for the ten-year license term.

b. Shared Use Services

7. *Marine (Ship) Service:* This service is a shipboard radio service authorized under part 80 of the Commission's Rules to provide telecommunications between watercraft or between watercraft and shore-based stations. Radio installations are required by domestic and international law for large passenger or cargo vessels. Radio equipment may be voluntarily installed on smaller vessels, such as recreational boats. The Telecommunications Act of 1996 gave the Commission the authority to license certain ship stations by rule rather than by individual license. The Commission exercises that authority. Private boat operators sailing entirely within domestic U.S. waters and who are not otherwise required by treaty or agreement to carry a radio, are no longer required to hold a marine license, and they will not be required to pay a regulatory fee. For FY 2002, parties required to be licensed and those choosing to be licensed for Marine (Ship) Stations will pay a $10 annual regulatory fee per station, payable for an entire ten-year license term at the time of application for a new, renewal, or reinstatement license. The total regulatory fee due is $100 for the ten-year license term.

8. *Marine (Coast) Service:* This service includes land-based stations in the maritime services, authorized under part 80 of the Commission's Rules, to provide communications services to ships and other watercraft in coastal and inland waterways. For FY 2002, licensees of Marine (Coast) Stations will pay a $10 annual regulatory fee per call sign, payable for the entire ten-year license term at the time of application for a new, renewal, or reinstatement license. The total regulatory fee due is $100 per call sign for the ten-year license term.

9. *Private Land Mobile Radio Services (PLMRS)(Shared Use):* These services include Land Mobile Radio Services operating under parts 90 and 95 of the Commission's Rules. Services in this category provide one-or two-way communications between vehicles, persons or fixed stations on a shared basis and include radiolocation services, industrial radio services, and land transportation radio services. For FY 2002, licensees of services in this category will pay a $5 annual regulatory fee per call sign, payable for an entire ten-year license term at the time of application for a new, renewal, or reinstatement license. The total regulatory fee due is $50 for the ten-year license term.

10. *Aviation (Aircraft) Service:* These services include stations authorized to provide communications between aircraft and between aircraft and ground stations and include frequencies used to communicate with air traffic control facilities pursuant to part 87 of the Commission's Rules. The Telecommunications Act of 1996 gave the Commission the authority to license certain aircraft radio stations by rule rather than by individual license. The Commission exercises that authority. Private aircraft operators flying entirely within domestic U.S. airspace and who are not otherwise required by treaty or agreement to carry a radio are no longer required to hold an aircraft license, and they will not be required to pay a regulatory fee. For FY 2002, parties required to be licensed and those choosing to be licensed for Aviation (Aircraft) Stations will pay a $5 annual regulatory fee per station, payable for the entire ten-year license term at the time of application for a new, renewal, or reinstatement license. The total regulatory fee due is $50 per station for the ten-year license term.

11. *Aviation (Ground) Service:* This service includes stations authorized to provide ground-based communications

[171] 47 U.S.C. 159(b)(1)(A).

[172] This category only applies to licensees of shared-use private 220–222 MHz and 470 MHz and above in the Specialized Mobile Radio (SMR) service who have elected not to change to the Commercial Mobile Radio Service (CMRS). Those who have elected to change to the CMRS are referred to paragraph 14 of this Attachment.

[173] Although this fee category includes licenses with ten-year terms, the estimated volume of ten-year license applications in FY 2000 is less than one-tenth of one percent and, therefore, is statistically insignificant.

to aircraft for weather or landing information, or for logistical support pursuant to part 87 of the Commission's Rules. Certain ground-based stations which only serve itinerant traffic, i.e., possess no actual units on which to assess a fee, are exempt from payment of regulatory fees. For FY 2002, licensees of Aviation (Ground) Stations will pay a $10 annual regulatory fee per license, payable for the entire five-year license term at the time of application for a new, renewal, or reinstatement license. The total regulatory fee is $50 per call sign for the five-year license term.

12. *General Mobile Radio Service (GMRS):* These services include Land Mobile Radio licensees providing personal and limited business communications between vehicles or to fixed stations for short-range, two-way communications pursuant to part 95 of the Commission's Rules. For FY 2002, GMRS licensees will pay a $5 annual regulatory fee per license, payable for an entire five-year license term at the time of application for a new, renewal or reinstatement license. The total regulatory fee due is $25 per license for the five-year license term.

c. Amateur Radio Vanity Call Signs

13. *Amateur Vanity Call Signs:* This category covers voluntary requests for specific call signs in the Amateur Radio Service authorized under part 97 of the Commission's Rules. Applicants for Amateur Vanity Call-Signs will continue to pay a $1.20 annual regulatory fee per call sign, as prescribed in the FY 2001 fee schedule, payable for an entire ten-year license term at the time of application for a vanity call sign until the FY 2002 fee schedule becomes effective. The total regulatory fee due would be $12 per license for the ten-year license term.[174] For FY 2002, Amateur Vanity Call Sign applicants will pay a $1.45 annual regulatory fee per call sign, payable for an entire ten-year term at the time of application for a new, renewal or reinstatement license. The total regulatory fee due is $14.50 per call sign for the ten-year license term.

d. Commercial Wireless Radio Services

14. *Commercial Mobile Radio Services (CMRS) Mobile Services:* The Commercial Mobile Radio Service (CMRS) is an ''umbrella'' descriptive term attributed to various existing broadband services authorized to provide interconnected mobile radio services for profit to the public, or to such classes of eligible users as to be effectively available to a substantial portion of the public. CMRS Mobile Services include certain licensees which formerly were licensed as part of the Private Radio Services (e.g., Specialized Mobile Radio Services) and others formerly licensed as part of the Common Carrier Radio Services (e.g., Public Mobile Services and Cellular Radio Service). While specific rules pertaining to each covered service remain in separate parts 22, 24, 27, 80 and 90, general rules for CMRS are contained in part 20. CMRS Mobile Services will include: Specialized Mobile Radio Services (part 90);[175] Broadband Personal Communications Services (part 24), Public Coast Stations (part 80); Public Mobile Radio (Cellular, 800 MHz Air-Ground Radiotelephone, and Offshore Radio Services) (part 22); and Wireless Communications Service (part 27). Each licensee in this group will pay an annual regulatory fee for each mobile or cellular unit (mobile or telephone number), assigned to its customers, including resellers of its services. For FY 2002, the regulatory fee is $.24 per unit.

15. *Commercial Mobile Radio Services (CMRS) Messaging Services:* The Commercial Mobile Radio Service (CMRS) is an ''umbrella'' descriptive term attributed to various existing narrowband services authorized to provide interconnected mobile radio services for profit to the public, or to such classes of eligible users as to be effectively available to a substantial portion of the public. CMRS Messaging Services include certain licensees which formerly were licensed as part of the Private Radio Services (e.g., Private Paging and Radiotelephone Service), licensees formerly licensed as part of the Common Carrier Radio Services (e.g., Public Mobile One-Way Paging), licensees of Narrowband Personal Communications Service (PCS) (e.g., one-way and two-way paging), and 220–222 MHz Band and Interconnected Business Radio Service. In addition, this category includes small SMR systems authorized for use of less than 10 MHz of bandwidth. While specific rules pertaining to each covered service remain in separate parts 22, 24 and 90, general rules for CMRS are contained in part 20. Each licensee in the CMRS Messaging Services will pay an annual regulatory fee for each unit (pager, telephone number, or mobile) assigned to its customers, including resellers of its services. For FY 2002, the regulatory fee is $.08 per unit.

16. Finally, with regard to our definition of a CMRS payment units, we clarify that fees are assessable on each CMRS subscriber considered ''active'' as of December 31, 2001. Examples of CMRS subscribers include: subscribers of terrestrial mobile telephone services, subscribers of one-way or two-way paging services, and subscribers of other wireless messaging services that are capable of transmitting and/or receiving data communications. A ''feeable'' CMRS payment unit is a CMRS subscriber that has possession of a mobile device that can transmit or receive voice or non-voice communications, or a CMRS subscriber has a contractual agreement for the provision of a CMRS service. The responsible payer of the regulatory fee is the CMRS licensee. For example, John Doe purchases a pager and obtains a paging services contract from Paging Licensee X. Paging Licensee X is responsible for paying the applicable regulatory fee for this unit. Further, if John Doe purchases a pager and obtains paging services from a paging reseller which resells services from Paging Licensee X, Paging Licensee X is still responsible for paying the applicable regulatory fee for this CMRS payment unit.

2. Media Services

17. The regulatory fees for the Media fee category apply to broadcast licensees and permittees. Noncommercial Educational Broadcasters are exempt from regulatory fees.

a. Commercial Radio

18. These categories include licensed Commercial AM (Classes A, B, C, and D) and FM (Classes A, B, B1, C, C1, C2, and C3) Radio Stations operating under part 73 of the Commission's Rules.[176] We have combined class of station and city grade contour population data to formulate a schedule of radio fees which differentiate between stations based on class of station and population served. In general, higher class stations and stations in metropolitan areas will pay

[174] Section 9(h) exempts ''amateur radio operator licenses under part 97 of the Commission's rules (47 CFR part 97)'' from the requirement. However, section 9(g)'s fee schedule explicitly includes ''Amateur vanity call signs'' as a category subject to the payment of a regulatory fee.

[175] This category does not include licensees of private shared-use 220 MHz and 470 MHz and above in the Specialized Mobile Radio (SMR) service who have elected to remain non-commercial. Those who have elected not to change to the Commercial Mobile Radio Service (CMRS) are referred to paragraph 4 of this Attachment.

[176] The Commission acknowledges that certain stations operating in Puerto Rico and Guam have been assigned a higher level station class than would be expected if the station were located on the mainland. Although this results in a higher regulatory fee, we believe that the increased interference protection associated with the higher station class is necessary and justifies the fee.

higher fees than lower class stations and stations located in rural areas. The specific fee that a station must pay is determined by where it ranks after weighting its fee requirement (determined by class of station) with its population. The regulatory fee classifications for Radio Stations for FY 2002 are as follows:

FY 2002 RADIO STATION REGULATORY FEES

Population served	AM class A	AM class B	AM class C	AM class D	FM classes A, B1 & C3	FM classes B, C, C1 & C2
<=20,000	500	375	275	325	375	500
20,001–50,000	925	725	375	525	725	925
50.001–125,000	1,500	975	525	775	975	1,500
125,001–400,000	2,250	1,575	800	950	1,575	2,250
400,001–1,000,000	3,125	2,525	1,425	1,700	2,525	3,125
>1,000,000	4,975	4,100	2,075	2,625	4,100	4,975

19. Licensees may determine the appropriate fee payment by referring to the FCC's internet world wide web site (*http://www.fcc.gov*) or by calling the FCC's National Call Center (1–888–225–5322). The same information may be included in the Public Notices mailed to each licensee for which we have a current address on file.

(Note: Non-receipt of a Public Notice does not relieve a licensee of its obligation to submit its regulatory fee payment).

b. Construction Permits—Commercial AM Radio

20. This category includes holders of permits to construct *new* Commercial AM Stations. For FY 2002, a regulatee who held a construction permit on October 1, 2001 will pay a fee of $370 for each permit. A regulatee pays a construction permit fee only if the permit is for a new facility. If the regulatee held a license on October 1, 2001 or prior, but also has a construction permit to make modifications to the licensed facility, it is required to pay the applicable *license fee* for the designated group in the above table.

c. Construction Permits—Commercial FM Radio

21. This category includes holders of permits to construct *new* Commercial FM Stations. For FY 2002, a regulatee who held a construction permit on October 1, 2001 will pay a fee of $1,500 for each permit. A regulatee pays a construction permit fee only if the permit is for a new facility. If the regulatee held a license on October 1, 2001 or prior, but also has a construction permit to make modifications to the licensed facility, it is required to pay the applicable *license fee* for the designated group in the above table.

d. Commercial Television Stations

22. This category includes licensed Commercial VHF and UHF Television Stations covered under part 73 of the Commission's Rules, except commonly owned Television Satellite Stations, addressed separately below. Markets are Nielsen Designated Market Areas (DMA) as listed in the *Television & Cable Factbook*, Stations Volume No. 70, 2002 Edition, Warren Publishing, Inc., or similar source. The fees for each station categories are as follows:

VHF Markets 1–10	$47,050
VHF Markets 11–25	34,700
VHF Markets 26–50	23,625
VHF Markets 51–100	15,150
VHF Remaining Markets	3,525
UHF Markets 1–10	12,800
UHF Markets 11–25	10,300
UHF Markets 26–50	6,600
UHF Markets 51–100	3,875
UHF Remaining Markets	1,075

e. Commercial Television Satellite Stations

23. Commonly owned Television Satellite Stations in any market (authorized pursuant to Note 5 of § 73.3555 of the Commission's Rules) that retransmit programming of the primary station are assessed a fee of $805 annually. Those stations designated as Television Satellite Stations in the 2002 Edition of the *Television and Cable Factbook* (or similar source) are subject to the fee applicable to Television Satellite Stations. All other television licensees are subject to the regulatory fee payment required for their class of station and market.

f. Construction Permits—Commercial VHF Television Stations

24. This category includes holders of permits to construct *new* Commercial VHF Television Stations authorized as of October 1, 2001. For FY 2002, a regulatee who held a construction permit on October 1, 2001 will pay a fee of $2,750 for each permit. A regulatee pays a construction permit fee only if the permit is for a new facility. If the regulatee held a license on October 1, 2001 or prior, but also has a construction permit to make modifications to the licensed facility, it is required to pay the applicable *license fee* for the designated group within which the television station appears.

g. Construction Permits—Commercial UHF Television Stations

25. This category includes holders of permits to construct *new* UHF Television Stations authorized as of October 1, 2001. For FY 2002, a regulatee who held a construction permit on October 1, 2001 will pay a fee of $5,175 for each permit. A regulatee pays a construction permit fee only if the permit is for a new facility. If the regulatee held a license on October 1, 2001 or prior, but also has a construction permit to make modifications to the licensed facility, it is required to pay the applicable *license fee* for the designated group within which the television station appears.

h. Construction Permits—Satellite Television Stations

26. The fee for UHF and VHF Television Satellite Station construction permits for FY 2002 is $420. A regulatee who held a construction permit on October 1, 2001 will pay a fee of $420 for each permit. A regulatee pays a construction permit fee only if the permit is for a new facility. If the regulatee held a license on October 1, 2001 or prior, but also has a construction permit to make modifications to the licensed facility, it is required to pay the applicable *license fee* for the designated group within which the station appears.

i. Low Power Television, FM Translator and Booster Stations, TV Translator and Booster Stations

27. This category includes Low Power UHF/VHF Television stations operating under part 74 of the Commission's Rules with a transmitter power output limited to 1 kW for a UHF facility and, generally, 0.01 kW for a VHF facility. Low Power Television (LPTV) stations may retransmit the programs and signals of a TV Broadcast Station, originate programming, and/or operate as a subscription service. This category also includes translators and boosters operating under part 74 which rebroadcast the signals of full service stations on a frequency different from the parent station (translators) or on the same frequency (boosters). The stations in this category are secondary to full service stations in terms of frequency priority. We have also received requests for waivers of the regulatory fees from operators of community based Translators. These Translators are generally not affiliated with commercial broadcasters, are nonprofit, nonprofitable, or only marginally profitable, serve small rural communities, and are supported financially by the residents of the communities served. We are aware of the difficulties these Translators have in paying even minimal regulatory fees, and we have addressed those concerns in the ruling on reconsideration of the FY 1994 *Report and Order.* Community based Translators that meet certain requirements will have their fees waived.[177] For FY 2002, licensees in low power television, FM translator and booster, and TV translator and booster category will pay a regulatory fee of $320 for each license held.

j. Broadcast Auxiliary Stations

28. This category includes licensees of remote pickup stations (either base or mobile) and associated accessory equipment authorized pursuant to a single license, Aural Broadcast Auxiliary Stations (Studio Transmitter Link and Inter-City Relay) and Television Broadcast Auxiliary Stations (TV Pickup, TV Studio Transmitter Link, TV Relay) authorized under part 74 of the Commission's Rules. Auxiliary Stations are generally associated with a particular television or radio broadcast station or cable television system. This category does not include translators and boosters (see paragraph 26 *infra*). For FY 2002, licensees of Commercial Auxiliary Stations will pay a $10 annual regulatory fee on a per call sign basis.

k. Multipoint Distribution Service

29. This category includes Multipoint Distribution Service (MDS), Local Multipoint Distribution Service (LMDS), and Multichannel Multipoint Distribution Service (MMDS), authorized under parts 21 and 101 of the Commission's Rules to use microwave frequencies for video and data distribution within the United States. For FY 2002, MDS and MMDS stations will pay an annual regulatory fee of $430 per call sign.

3. Cable Services

a. Cable Television Systems

30. This category includes operators of Cable Television Systems, providing or distributing programming or other services to subscribers under part 76 of the Commission's Rules. For FY 2002, Cable Systems will pay a regulatory fee of $.53 per subscriber.[178] Payments for Cable Systems are to be made on a per subscriber basis as of December 31, 2001. Cable Systems should determine their subscriber numbers by calculating the number of single family dwellings, the number of individual households in multiple dwelling units, *e.g.,* apartments, condominiums, mobile home parks, etc., paying at the basic subscriber rate, the number of bulk rate customers and the number of courtesy or fee customers. In order to determine the number of bulk rate subscribers, a system should divide its bulk rate charge by the annual subscription rate for individual households. *See* FY 1994 *Report and Order,* Appendix B at paragraph 31.[179]

b. Cable Antenna Relay Service

31. This category includes Cable Antenna Relay Service (CARS) stations used to transmit television and related audio signals, signals of AM and FM Broadcast Stations, and cablecasting from the point of reception to a terminal point from where the signals are distributed to the public by a Cable Television System. For FY 2002, licensees will pay an annual regulatory fee of $65 per CARS license.

4. Wireline Competition Services

a. Commercial Microwave (Domestic Public Fixed Radio Service)

32. This category includes licensees in the Point-to-Point Microwave Radio Service, Local Television Transmission Radio Service, and Digital Electronic Message Service, authorized under part 101 of the Commission's Rules to use microwave frequencies for video and data distribution within the United States. These services are now included in the Microwave category (see paragraph 5 *supra*).

b. Interstate Telecommunication Service Providers

33. This category includes all providers of local and telephone services to end users. Covered services include the interstate and international portion of wireline local exchange service, local and long distance private line services for both voice and data, dedicated and network packet and packet-like services, long distance message telephone services, and other local and toll services. Providers of such services are referred to herein as ''interstate telecommunication service providers''.

34. Interstate service providers include CAP/CLECs, incumbent local exchange carriers (local telephone operating companies), interexchange carriers (long distance telephone companies), local resellers, OSPs (operator service providers that enable customers to make away from home calls and to place calls with alternative billing arrangements), payphone service providers, prepaid card, private service providers, satellite carriers that provide fixed local or message toll services, shared tenant service providers, toll resellers, and other local and other service providers.

35. To avoid imposing a double payment burden on resellers, we base the regulatory fee on end-user revenues. Interstate telecommunication service providers, including resellers, must submit fee payments based upon their proportionate share of interstate and international end-user revenues for local and toll services. We use the terms end-user revenues, local service and toll service, based on the methodology used for calculating contributions to the Universal Service support mechanisms.[180] Interstate telecommunication service providers do not pay the Common Carrier regulatory fee on revenue from the provision of intrastate local and toll services, wireless monthly and local message services, satellite toll services, carrier's

[177] See 10 FCC Rcd 12759, 12762 (1995).

[178] Cable systems are to pay their regulatory fees on a per subscriber basis rather than per 1,000 subscribers as set forth in the statutory fee schedule. See FY 1994 *Report and Order* at paragraph 100.

[179] 59 FR 30984 (June 16, 1994).

[180] *See 1998 Biennial Regulatory Review—Streamlined Contributor Reporting Requirements Associated with Administration of Telecommunications Relay Services, North American Numbering Plan, Local Number Portability, and Universal Service Support Mechanisms,* Report and Order, FCC 99–175, CC Docket No. 98–171 (rel. July 14, 1999), 64 FR 41320 (Jul. 30, 1999) (*Contributor Reporting Requirements Order).*

carrier telecommunications services, customer premises equipment, Internet service and non-telecommunications services. For FY 2002, carriers must multiply their interstate and international revenue from subject local and toll services by the factor 0.00153 to determine the appropriate fee for this category of service. Regulatees may want to use the following worksheet to determine their fee payment:

CALENDAR 2001 REVENUE INFORMATION

[show amounts in whole dollars]

Name	Amount
1. Service provided by U.S. carriers that both originates and terminates in foreign points. FCC Form 499–A Line 412 (e)	.....
2. Interstate end-user revenues from all telecommunications services. FCC Form 499–A Line 420(d)	.....
3. International end-user revenues from all telecommunications services except international-to-international. FCC Form 499–A Line 420(e)	.....
4. Total end-user revenues (Sum of Lines 1, 2 and 3) Note: Also enter this number on Block (28A)—''FCC Code 1''.	.....
5. End-user interstate mobile service monthly and activation charges. FCC Form 499–A Line 409(d)	.....
6. End-user international mobile service monthly and activation charges. FCC Form 499–A Line 409(e)	.....
7. End-user interstate mobile service message charges including roaming charges but excluding toll charges.FCC Form 499–A Line 410(d)	.....
8. End-user international mobile service message charges including roaming charges but excluding toll charges.FCC Form 499–A Line 410(e)	.....
9. End-user interstate satellite services. FCC Form 499–A Line 416(d)	.....
10. End-user international satellite services. FCC Form 499–A Line 416(e)	.....
11. Surcharges on mobile and satellite services identified as recovering universal service contributions and included in Line 403(d) or 403(e) on your FCC Form 499. [Note: You may not include in Block 11 universal service pass-through surcharges applied to local or toll services, nor any surcharges identified as intrastate surcharges.]	.....
12. Interstate and international revenues from resellers that do not contribute to USF. FCC Form 499–A Line 511(b)	.....
13. Total excluded end-user revenues. (Sum Lines 5 through 12.) Note: Also enter this number on Block (29A)—''FCCCode 2''.	.....
14. Total subject revenues. (Line 4 minus Line 13) Note: Also enter this number in Block (25A)—''Quantity''.	.....
15. Interstate telecommunications service provider fee factor	.00153
16. 2002 Regulatory Fee (Line 14 times Line 15)* Note: Also enter this number in Block (27A)—''Total Fee''.	

*You are exempt from filing if the amount on line 16 is less than $10.

5. International Services

a. Earth Stations

36. Very Small Aperture Terminal (VSAT) Earth Stations, equivalent C-Band Earth Stations and antennas, and earth station systems comprised of very small aperture terminals operate in the 12 and 14 GHz bands and provide a variety of communications services to other stations in the network. *VSAT* systems consist of a network of technically-identical small Fixed-Satellite Earth Stations which often include a larger hub station. VSAT Earth Stations and C-Band Equivalent Earth Stations are authorized pursuant to part 25 of the Commission's Rules. *Mobile Satellite Earth Stations,* operating pursuant to part 25 of the Commission's Rules under blanket licenses for mobile antennas (transceivers), are smaller than one meter and provide voice or data communications, including position location information for mobile platforms such as cars, buses, or trucks.[181] *Fixed-Satellite Transmit/Receive and Transmit-Only Earth Station antennas,* authorized or registered under part 25 of the Commission's Rules, are operated by private and public carriers to provide telephone, television, data, and other forms of communications. Included in this category are telemetry, tracking and control (TT&C) earth stations, and earth station uplinks. For FY 2002, licensees of VSATs, Mobile Satellite Earth Stations, and Fixed-Satellite, Transmit/Receive and Transmit-Only Earth Stations will pay a fee of $140 per authorization or registration *as well as a separate fee of $140 for each associated Hub Station.*

37. *Receive-only earth stations.* For FY 2002, there is no regulatory fee for receive-only earth stations.

b. Space Stations (Geostationary Orbit)

38. Geostationary Orbit (also referred to as Geosynchronous) Space Stations are domestic and international satellites positioned in orbit to remain approximately fixed relative to the earth. Most are authorized under part 25 of the Commission's Rules to provide communications between satellites and earth stations on a common carrier and/or private carrier basis. In addition, this category includes Direct Broadcast Satellite (DBS) Service which includes space stations authorized under part 100 of the Commission's rules to transmit or re-transmit signals for direct reception by the general public encompassing both individual and community reception. For FY 2002, entities authorized to operate geostationary space stations (including DBS satellites) will be assessed an annual regulatory fee of $99,700 per operational station in orbit. Payment is required for any geostationary satellite that has been launched and tested and is authorized to provide service.

c. Space Stations (Non-Geostationary Orbit)

39. Non-Geostationary Orbit Systems (such as Low Earth Orbit (LEO) Systems) are space stations that orbit the earth in non-geosynchronous orbit. They are authorized under part 25 of the Commission's rules to provide communications between satellites and earth stations on a common carrier and/or private carrier basis. For FY 2002, entities authorized to operate Non-Geostationary Orbit Systems (NGSOs) will be assessed an annual regulatory fee of $103,200 per operational system in orbit. Payment is required for any NGSO System that has one or more operational satellites operational. In our FY 1997 *Report and Order*[182] at paragraph 75 we retained our requirement that licensees of LEOs pay the LEO regulatory fee upon their certification of operation of a single satellite pursuant to section 25.120(d). We require payment of this fee following commencement of operations

[181] Mobile earth stations are hand-held or vehicle-based units capable of operation while the operator or vehicle is in motion. In contrast, transportable units are moved to a fixed location and ooperate in a stationary (fixed) mode. Both are assessed the same regulatory fee for FY 2001.

[182] 65 FR 37408 (July 11, 1997).

of a system's first satellite to insure that we recover our regulatory costs related to LEO systems from licensees of these systems as early as possible so that other regulatees are not burdened with these costs any longer than necessary. Because section 25.120(d) has significant implications beyond regulatory fees (such as whether the entire planned cluster is operational in accordance with the terms and conditions of the license) we previously clarified our definition of an operational LEO satellite to prevent misinterpretation of our intent as follows:

Licensees of Non-Geostationary Satellite Systems (such as LEOs) are assessed a regulatory fee upon the commencement of operation of a system's first satellite as reported annually pursuant to §§ 25.142(c), 25.143(e), 25.145(g), or upon certification of operation of a single satellite pursuant to § 25.120(d).

d. International Bearer Circuits

40. Regulatory fees for International Bearer Circuits are to be paid by facilities-based common carriers (either domestic or international) activating the circuit in any transmission facility for the provision of service to an end user or resale carrier. Payment of the fee for bearer circuits by non-common carrier submarine cable operators is required for circuits sold on an indefeasible right of use (IRU) basis or leased to any customer, including themselves or their affiliates, other than an international common carrier authorized by the Commission to provide U.S. international common carrier services. *See* FY 1994 *Report and Order* at 5367 [183]. Payment of the international bearer circuit fee is also required by non-common carrier satellite operators for circuits sold or leased to any customer, including themselves or their affiliates, other than an international common carrier authorized by the Commission to provide U.S. international common carrier services. The fee is based upon active 64 Kbps circuits, or equivalent circuits. Under this formulation, 64 Kbps circuits or their equivalent will be assessed a fee. Equivalent circuits include the 64 Kbps circuit equivalent of larger bit stream circuits. For example, the 64 Kbps circuit equivalent of a 2.048 Mbps (or E–1) circuit is 30 64 Kbps circuits; a 155 Mbps (or STM–1) circuit is 1,890 64 Kbps circuits. Analog circuits such as 3 and 4 kHz circuits used for international service are also included as 64 kbps circuits. However, any derived circuits (circuits derived from 64 Kbps bearer circuits by the use of digital circuit multiplication systems) are not equivalent 64 kbps bearer circuits. Such derived circuits are not subject to payment of a fee. Only the 64 Kbps bearer circuit from which they have been derived will be subject to payment of a fee. Resold circuits are not subject to payment of a fee. For FY 2002, the regulatory fee is $2 for each active 64 Kbps bearer circuit or equivalent. For television channels, we assess fees as follows:

Analog television channel size in MHz—	Number of equivalent 64 Kbps circuits
36	630
24	288
18	240

e. International Public Fixed

41. This fee category includes common carriers authorized under part 23 of the Commission's Rules to provide radio communications between the United States and a foreign point via microwave or HF troposcatter systems, other than satellites and satellite earth stations, but not including service between the United States and Mexico and the United States and Canada using frequencies above 72 MHz. For FY 2002, International Public Fixed Radio Service licensees will pay a $1,400 annual regulatory fee per call sign.

f. International (HF) Broadcast

42. This category covers International Broadcast Stations licensed under part 73 of the Commission's Rules to operate on frequencies in the 5,950 kHz to 26,100 kHz range to provide service to the general public in foreign countries. For FY 2002, International HF Broadcast Stations will pay an annual regulatory fee of $495 per station license.

Attachment G—Description of FCC Activities

Licensing: This activity includes the authorization or licensing of radio stations, telecommunications equipment and radio operators, as well as the authorization of common carrier and other services and facilities. Includes direct organizational FTE and FTE workyear effort provided by staff offices to support policy direction, program development, legal services, and executive direction, as well as support services associated with licensing activities.

Competition: This activity includes formal inquiries, rulemaking proceedings to establish or amend the Commission's rules and regulations, action on petitions for rulemaking, and requests for rule interpretations or waivers; economic studies and analyses; spectrum planning, modeling, propagation-interference analyses and allocation; and development of equipment standards. Includes direct organizational FTE and FTE workyear effort provided by staff offices to support policy direction, program development, legal services, and executive direction, as well as support services associated with activities to promote competition.

Enforcement: This activity includes enforcement of the Commission's rules, regulations and authorizations, including investigations, inspections, compliance monitoring, and sanctions of all types. Also includes the receipt and disposition of formal and informal complaints regarding common carrier rates and services, the review and acceptance/rejection of carrier tariffs, and the review, prescription and audit of carrier accounting practices. Includes direct organizational FTE and FTE workyear effort provided by staff offices to support policy direction, program development, legal services, and executive direction, as well as support services associated with enforcement activities.

Consumer Information Services: This activity includes the publication and dissemination of Commission decisions and actions, and related activities; public reference and library services; the duplication and dissemination of Commission records and databases; the receipt and disposition of public inquiries; consumer, small business, and public assistance; and public affairs and media relations. Includes direct organizational FTE and FTE workyear effort provided by staff offices to support policy direction, program development, legal services, and executive direction, as well as support services associated with consumer information activities.

Spectrum Management: This activity includes management of the electromagnetic spectrum as mandated by the Communications Act of 1934, as amended. Spectrum management includes the structure and processes for allocating, allotting, assigning, and licensing this scarce resource to the private sector and state and local governments in a way that promotes competition while ensuring that the public interest is best served. In order to manage spectrum in both an efficient and equitable manner, the Commission prepares economic, technical and engineering studies, coordinates with federal agencies, and represents U.S. industry in international forums. This

[183] 59 FR 30984 (june 16, 1994).

activity includes direct organizational FTEs and FTE workyear efforts provided by staff offices that support policy direction, program development, legal services, and executive direction, as well as support services associated with spectrum management activities.

Attachment H—Factors, Measurements and Calculations That Go Into Determining Station Signal Contours and Associated Population Coverages

AM Stations

Specific information on each day tower, including field ratio, phasing, spacing and orientation was retrieved, as well as the theoretical pattern RMS figure (mV/m @ 1 km) for the antenna system. The standard, or modified standard if pertinent, horizontal plane radiation pattern was calculated using techniques and methods specified in §§ 73.150 and 73.152 of the Commission's rules.[184] Radiation values were calculated for each of 72 radials around the transmitter site (every 5 degrees of azimuth). Next, estimated soil conductivity data was retrieved from a database representing the information in FCC Figure M3. Using the calculated horizontal radiation values, and the retrieved soil conductivity data, the distance to the city grade (5 mV/m) contour was predicted for each of the 72 radials. The resulting distance to city grade contours were used to form a geographical polygon. Population counting was accomplished by determining which 1990 block centroids were contained in the polygon. The sum of the population figures for all enclosed blocks represents the total population for the predicted city grade coverage area.

FM Stations

The maximum of the horizontal and vertical HAAT (m) and ERP (kW) was used. Where the antenna HAMSL was available, it was used in lieu of the overall HAAT figure to calculate specific HAAT figures for each of 72 radials under study. Any available directional pattern information was applied as well, to produce a radial-specific ERP figure. The HAAT and ERP figures were used in conjunction with the propagation curves specified in § 73.313 of the Commission's rules to predict the distance to the city grade (70 dBuV/m or 3.17 mV/m) contour for each of the 72 radials.[185] The resulting distance to city grade contours were used to form a geographical polygon. Population counting was accomplished by determining which 1990 block centroids were contained in the polygon. The sum of the population figures for all enclosed blocks represents the total population for the predicted city grade coverage area.

Attachment I

Parties Filing Comments on the Notice of Proposed Rulemaking

Steven Karty
William J. Hanrahan
AT&T Corporation (''AT&T'')
American Association of Paging Carriers (''AAPC'')
Blooston, Mordkofsky, Dickens, Duffy & Prendergast (''BMDDP'')
Allied Personal Communications Industries Association of California (''Allied'')

Parties Filing Reply Comments

Verizon, Inc. (''Verizon'')
American Mobile Telecommunications Association, Inc. (''AMTA'')

Parties Filing a Notice of Oral Ex Parte Presentation

Arch Wireless, Inc. (''Arch'')
Filed by Wilkinson, Barker, Knauer, LLP
Other Entities Present at the Meeting:
American Association of Paging Carriers (''AAPC'')
Law Firm of Blooston, Mordkofsky, Dickens, Duffy & Prendergast (''BMDDP'')
Arch Wireless, Inc. (''Arch'')

Attachment J—AM and FM Radio Regulatory Fees

The List of regulatory fees is available from the FCC Public Reference Room, CY–A257, 445 12th St. SW, Washington, DC 20554.

Statement of Commissioner Michael Copps, Concurring

Re: Assessment and Collection of Regulatory Fees for Fiscal Year 2002

I am concerned that the Commission does not address when or how it would adjust the regulatory fees to take into account changes to the cost of regulating various services. The paging industry argues that it faces a 60 percent per unit increase in regulatory fees this year due to a declining subscriber base, notwithstanding reduced regulatory resources devoted to paging. Today's order concludes that the paging industry has not demonstrated that an increase from $.05 to $.08 per unit per year would harm the industry as a whole, but fails to address the underlying concern about revisions to the Commission's methodology. I take some comfort, however, that the Commission plans to have in place a new accounting system in the near future, and that, in the meantime, our rules expressly provide that individual providers may seek reduction or deferral of regulatory fees due to financial hardship.

[FR Doc. 02–17308 Filed 7–11–02; 8:45 am]
BILLING CODE 6712–02–P

[184] 47 CFR 73.150 and 73.152.

[185] 47 CFR 73.313.

Federal Register

Friday,
July 12, 2002

Part IV

Department of the Interior

Bureau of Indian Affairs

Indian Entities Recognized and Eligible To Receive Services From the United States Bureau of Indian Affairs; Notice

DEPARTMENT OF THE INTERIOR

Bureau of Indian Affairs

Indian Entities Recognized and Eligible To Receive Services From the United States Bureau of Indian Affairs

AGENCY: Bureau of Indian Affairs, Interior.

ACTION: Notice.

SUMMARY: Notice is hereby given of the current list of 562 tribal entities recognized and eligible for funding and services from the Bureau of Indian Affairs by virtue of their status as Indian tribes. This notice is published pursuant to Section 104 of the Act of November 2, 1994 (Pub. L. 103–454; 108 Stat. 4791, 4792).

FOR FURTHER INFORMATION CONTACT: Daisy West, Bureau of Indian Affairs, Division of Tribal Government Services, MS–4631–MIB, 1849 C Street, NW, Washington, D.C. 20240. Telephone number: (202) 208–2475.

SUPPLEMENTARY INFORMATION: This notice is published in exercise of authority delegated to the Assistant Secretary—Indian Affairs under 25 U.S.C. 2 and 9 and 209 DM 8.

Published below is a list of federally acknowledged tribes in the contiguous 48 states and in Alaska. The list is updated from the notice published on March 13, 2000 (65 FR 13298). Six tribal entities have been added to the list. Three of the six tribes became newly recognized since the last publication. The other three tribes were omitted from earlier **Federal Register** publications of the Tribal Entities List. The Shawnee Tribe and the Graton Rancheria, were recognized under Titles 7 and 14 of the Act of December 27, 2000, Pub. L. 106–568, 114 Stat. 2868. The Cowlitz Indian Tribe was acknowledged under 25 CFR part 83. The final determination for federal acknowledgment became effective on January 4, 2002. The Assistant Secretary—Indian Affairs reaffirmed the formal recognition of the King Salmon Tribe, the Shoonaq' Tribe of Kodiak, and the Lower Lake Rancheria, on December 29, 2000. The reaffirmation acknowledged that an administrative oversight had occurred and that three tribes had been omitted from the **Federal Register** list of entities recognized and eligible to receive services from the United States Bureau of Indian Affairs.

Several tribes have also made changes to their tribal name. Most of the name changes are minor in nature, except for the California Valley Miwok Tribe (formerly the Sheep Ranch Rancheria). To aid in identifying tribal name changes, the tribe's former name is included with the new tribal name. We will continue to list the tribe's former name for several years before dropping the former name from the list. We have also made several corrections. To aid in identifying corrections, the tribe's previously listed name is included with the tribal name.

The listed entities are acknowledged to have the immunities and privileges available to other federally acknowledged Indian tribes by virtue of their government-to-government relationship with the United States as well as the responsibilities, powers, limitations and obligations of such tribes. We have continued the practice of listing the Alaska Native entities separately solely for the purpose of facilitating identification of them and reference to them given the large number of complex Native names.

Dated: July 1, 2002.

Neal A. McCaleb,

Assistant Secretary—Indian Affairs.

Indian Tribal Entities Within the Contiguous 48 States Recognized and Eligible To Receive Services From the United States Bureau of Indian Affairs

Absentee-Shawnee Tribe of Indians of Oklahoma
Agua Caliente Band of Cahuilla Indians of the Agua Caliente Indian Reservation, California
Ak Chin Indian Community of the Maricopa (Ak Chin) Indian Reservation, Arizona
Alabama-Coushatta Tribes of Texas
Alabama-Quassarte Tribal Town, Oklahoma
Alturas Indian Rancheria, California
Apache Tribe of Oklahoma
Arapahoe Tribe of the Wind River Reservation, Wyoming
Aroostook Band of Micmac Indians of Maine
Assiniboine and Sioux Tribes of the Fort Peck Indian Reservation, Montana
Augustine Band of Cahuilla Mission Indians of the Augustine Reservation, California
Bad River Band of the Lake Superior Tribe of Chippewa Indians of the Bad River Reservation, Wisconsin
Bay Mills Indian Community, Michigan (previously listed as the Bay Mills Indian Community of the Sault Ste. Marie Band of Chippewa Indians, Bay Mills Reservation, Michigan)
Bear River Band of the Rohnerville Rancheria, California
Berry Creek Rancheria of Maidu Indians of California
Big Lagoon Rancheria, California
Big Pine Band of Owens Valley Paiute Shoshone Indians of the Big Pine Reservation, California
Big Sandy Rancheria of Mono Indians of California
Big Valley Band of Pomo Indians of the Big Valley Rancheria, California
Blackfeet Tribe of the Blackfeet Indian Reservation of Montana
Blue Lake Rancheria, California
Bridgeport Paiute Indian Colony of California
Buena Vista Rancheria of Me-Wuk Indians of California
Burns Paiute Tribe of the Burns Paiute Indian Colony of Oregon
Cabazon Band of Cahuilla Mission Indians of the Cabazon Reservation, California
Cachil DeHe Band of Wintun Indians of the Colusa Indian Community of the Colusa Rancheria, California
Caddo Indian Tribe of Oklahoma
Cahuilla Band of Mission Indians of the Cahuilla Reservation, California
Cahto Indian Tribe of the Laytonville Rancheria, California
California Valley Miwok Tribe, California (formerly the Sheep Ranch Rancheria of Me-Wuk Indians of California)
Campo Band of Diegueno Mission Indians of the Campo Indian Reservation, California
Capitan Grande Band of Diegueno Mission Indians of California:
  Barona Group of Capitan Grande Band of Mission Indians of the Barona Reservation, California
  Viejas (Baron Long) Group of Capitan Grande Band of Mission Indians of the Viejas Reservation, California
Catawba Indian Nation (aka Catawba Tribe of South Carolina)
Cayuga Nation of New York
Cedarville Rancheria, California
Chemehuevi Indian Tribe of the Chemehuevi Reservation, California
Cher-Ae Heights Indian Community of the Trinidad Rancheria, California
Cherokee Nation, Oklahoma
Cheyenne-Arapaho Tribes of Oklahoma
Cheyenne River Sioux Tribe of the Cheyenne River Reservation, South Dakota
Chickasaw Nation, Oklahoma
Chicken Ranch Rancheria of Me-Wuk Indians of California
Chippewa-Cree Indians of the Rocky Boy's Reservation, Montana
Chitimacha Tribe of Louisiana
Choctaw Nation of Oklahoma
Citizen Potawatomi Nation, Oklahoma
Cloverdale Rancheria of Pomo Indians of California
Cocopah Tribe of Arizona
Coeur D'Alene Tribe of the Coeur D'Alene Reservation, Idaho
Cold Springs Rancheria of Mono Indians of California
Colorado River Indian Tribes of the Colorado River Indian Reservation, Arizona and California

Comanche Nation, Oklahoma (formerly the Comanche Indian Tribe)
Confederated Salish & Kootenai Tribes of the Flathead Reservation, Montana
Confederated Tribes of the Chehalis Reservation, Washington
Confederated Tribes of the Colville Reservation, Washington
Confederated Tribes of the Coos, Lower Umpqua and Siuslaw Indians of Oregon
Confederated Tribes of the Goshute Reservation, Nevada and Utah
Confederated Tribes of the Grand Ronde Community of Oregon
Confederated Tribes of the Siletz Reservation, Oregon
Confederated Tribes of the Umatilla Reservation, Oregon
Confederated Tribes of the Warm Springs Reservation of Oregon
Confederated Tribes and Bands of the Yakama Nation, Washington (formerly the Confederated Tribes and Bands of the Yakama Indian Nation of the Yakama Reservation)
Coquille Tribe of Oregon
Cortina Indian Rancheria of Wintun Indians of California
Coushatta Tribe of Louisiana
Cow Creek Band of Umpqua Indians of Oregon
Cowlitz Indian Tribe, Washington
Coyote Valley Band of Pomo Indians of California
Crow Tribe of Montana
Crow Creek Sioux Tribe of the Crow Creek Reservation, South Dakota
Cuyapaipe Community of Diegueno Mission Indians of the Cuyapaipe Reservation, California
Death Valley Timbi-Sha Shoshone Band of California
Delaware Nation, Oklahoma (formerly the Delaware Tribe of Western Oklahoma)
Delaware Tribe of Indians, Oklahoma
Dry Creek Rancheria of Pomo Indians of California
Duckwater Shoshone Tribe of the Duckwater Reservation, Nevada
Eastern Band of Cherokee Indians of North Carolina
Eastern Shawnee Tribe of Oklahoma
Elem Indian Colony of Pomo Indians of the Sulphur Bank Rancheria, California
Elk Valley Rancheria, California
Ely Shoshone Tribe of Nevada
Enterprise Rancheria of Maidu Indians of California
Flandreau Santee Sioux Tribe of South Dakota
Forest County Potawatomi Community, Wisconsin (previously listed as the Forest County Potawatomi Community of Wisconsin Potawatomi Indians, Wisconsin)
Fort Belknap Indian Community of the Fort Belknap Reservation of Montana
Fort Bidwell Indian Community of the Fort Bidwell Reservation of California
Fort Independence Indian Community of Paiute Indians of the Fort Independence Reservation, California
Fort McDermitt Paiute and Shoshone Tribes of the Fort McDermitt Indian Reservation, Nevada and Oregon
Fort McDowell Yavapai Nation, Arizona (formerly the Fort McDowell Mohave-Apache Community of the Fort McDowell Indian Reservation)
Fort Mojave Indian Tribe of Arizona, California & Nevada
Fort Sill Apache Tribe of Oklahoma
Gila River Indian Community of the Gila River Indian Reservation, Arizona
Grand Traverse Band of Ottawa and Chippewa Indians, Michigan (previously listed as the Grand Traverse Band of Ottawa & Chippewa Indians of Michigan)
Graton Rancheria, California
Greenville Rancheria of Maidu Indians of California
Grindstone Indian Rancheria of Wintun-Wailaki Indians of California
Guidiville Rancheria of California
Hannahville Indian Community, Michigan (previously listed as the Hannahville Indian Community of Wisconsin Potawatomie Indians of Michigan)
Havasupai Tribe of the Havasupai Reservation, Arizona
Ho-Chunk Nation of Wisconsin (formerly the Wisconsin Winnebago Tribe)
Hoh Indian Tribe of the Hoh Indian Reservation, Washington
Hoopa Valley Tribe, California
Hopi Tribe of Arizona
Hopland Band of Pomo Indians of the Hopland Rancheria, California
Houlton Band of Maliseet Indians of Maine
Hualapai Indian Tribe of the Hualapai Indian Reservation, Arizona
Huron Potawatomi, Inc., Michigan
Inaja Band of Diegueno Mission Indians of the Inaja and Cosmit Reservation, California
Ione Band of Miwok Indians of California
Iowa Tribe of Kansas and Nebraska
Iowa Tribe of Oklahoma
Jackson Rancheria of Me-Wuk Indians of California
Jamestown S'Klallam Tribe of Washington
Jamul Indian Village of California
Jena Band of Choctaw Indians, Louisiana
Jicarilla Apache Nation, New Mexico (formerly the Jicarilla Apache Tribe of the Jicarilla Apache Indian Reservation)
Kaibab Band of Paiute Indians of the Kaibab Indian Reservation, Arizona
Kalispel Indian Community of the Kalispel Reservation, Washington
Karuk Tribe of California
Kashia Band of Pomo Indians of the Stewarts Point Rancheria, California
Kaw Nation, Oklahoma
Keweenaw Bay Indian Community, Michigan (previously listed as the Keweenaw Bay Indian Community of L'Anse and Ontonagon Bands of Chippewa Indians of the L'Anse Reservation, Michigan)
Kialegee Tribal Town, Oklahoma
Kickapoo Tribe of Indians of the Kickapoo Reservation in Kansas
Kickapoo Tribe of Oklahoma
Kickapoo Traditional Tribe of Texas
Kiowa Indian Tribe of Oklahoma
Klamath Indian Tribe of Oregon
Kootenai Tribe of Idaho
La Jolla Band of Luiseno Mission Indians of the La Jolla Reservation, California
La Posta Band of Diegueno Mission Indians of the La Posta Indian Reservation, California
Lac Courte Oreilles Band of Lake Superior Chippewa Indians of Wisconsin (previously listed as the Lac Courte Oreilles Band of Lake Superior Chippewa Indians of the Lac Courte Oreilles Reservation of Wisconsin)
Lac du Flambeau Band of Lake Superior Chippewa Indians of the Lac du Flambeau Reservation of Wisconsin
Lac Vieux Desert Band of Lake Superior Chippewa Indians, Michigan (previously listed as the Lac Vieux Desert Band of Lake Superior Chippewa Indians of Michigan)
Las Vegas Tribe of Paiute Indians of the Las Vegas Indian Colony, Nevada
Little River Band of Ottawa Indians, Michigan (previously listed as the Little River Band of Ottawa Indians of Michigan)
Little Traverse Bay Bands of Odawa Indians, Michigan (previously listed as the Little Traverse Bay Bands of Odawa Indians of Michigan)
Lower Lake Rancheria, California
Los Coyotes Band of Cahuilla Mission Indians of the Los Coyotes Reservation, California
Lovelock Paiute Tribe of the Lovelock Indian Colony, Nevada
Lower Brule Sioux Tribe of the Lower Brule Reservation, South Dakota
Lower Elwha Tribal Community of the Lower Elwha Reservation, Washington
Lower Sioux Indian Community in the State of Minnesota (previously listed as the Lower Sioux Indian Community of Minnesota Mdewakanton Sioux Indians of the Lower Sioux Reservation in Minnesota)

Lummi Tribe of the Lummi Reservation, Washington
Lytton Rancheria of California
Makah Indian Tribe of the Makah Indian Reservation, Washington
Manchester Band of Pomo Indians of the Manchester-Point Arena Rancheria, California
Manzanita Band of Diegueno Mission Indians of the Manzanita Reservation, California
Mashantucket Pequot Tribe of Connecticut
Match-e-be-nash-she-wish Band of Pottawatomi Indians of Michigan
Mechoopda Indian Tribe of Chico Rancheria, California
Menominee Indian Tribe of Wisconsin
Mesa Grande Band of Diegueno Mission Indians of the Mesa Grande Reservation, California
Mescalero Apache Tribe of the Mescalero Reservation, New Mexico
Miami Tribe of Oklahoma
Miccosukee Tribe of Indians of Florida
Middletown Rancheria of Pomo Indians of California
Minnesota Chippewa Tribe, Minnesota (Six component reservations: Bois Forte Band (Nett Lake); Fond du Lac Band; Grand Portage Band; Leech Lake Band; Mille Lacs Band; White Earth Band)
Mississippi Band of Choctaw Indians, Mississippi
Moapa Band of Paiute Indians of the Moapa River Indian Reservation, Nevada
Modoc Tribe of Oklahoma
Mohegan Indian Tribe of Connecticut
Mooretown Rancheria of Maidu Indians of California
Morongo Band of Cahuilla Mission Indians of the Morongo Reservation, California
Muckleshoot Indian Tribe of the Muckleshoot Reservation, Washington
Muscogee (Creek) Nation, Oklahoma
Narragansett Indian Tribe of Rhode Island
Navajo Nation, Arizona, New Mexico & Utah
Nez Perce Tribe of Idaho
Nisqually Indian Tribe of the Nisqually Reservation, Washington
Nooksack Indian Tribe of Washington
Northern Cheyenne Tribe of the Northern Cheyenne Indian Reservation, Montana
Northfork Rancheria of Mono Indians of California
Northwestern Band of Shoshoni Nation of Utah (Washakie)
Oglala Sioux Tribe of the Pine Ridge Reservation, South Dakota
Omaha Tribe of Nebraska
Oneida Nation of New York
Oneida Tribe of Indians of Wisconsin (previously listed as the Oneida Tribe of Wisconsin)
Onondaga Nation of New York
Osage Tribe, Oklahoma
Ottawa Tribe of Oklahoma
Otoe-Missouria Tribe of Indians, Oklahoma
Paiute Indian Tribe of Utah (Cedar City Band of Paiutes, Kanosh Band of Paiutes, Koosharem Band of Paiutes, Indian Peaks Band of Paiutes, and Shivwits Band of Paiutes)
Paiute-Shoshone Indians of the Bishop Community of the Bishop Colony, California
Paiute-Shoshone Tribe of the Fallon Reservation and Colony, Nevada
Paiute-Shoshone Indians of the Lone Pine Community of the Lone Pine Reservation, California
Pala Band of Luiseno Mission Indians of the Pala Reservation, California
Pascua Yaqui Tribe of Arizona
Paskenta Band of Nomlaki Indians of California
Passamaquoddy Tribe of Maine
Pauma Band of Luiseno Mission Indians of the Pauma & Yuima Reservation, California
Pawnee Nation of Oklahoma
Pechanga Band of Luiseno Mission Indians of the Pechanga Reservation, California
Penobscot Tribe of Maine
Peoria Tribe of Indians of Oklahoma
Picayune Rancheria of Chukchansi Indians of California
Pinoleville Rancheria of Pomo Indians of California
Pit River Tribe, California (includes Big Bend, Lookout, Montgomery Creek & Roaring Creek Rancherias & XL Ranch)
Poarch Band of Creek Indians of Alabama
Pokagon Band of Potawatomi Indians, Michigan and Indiana (previously listed as the Pokagon Band of Potawatomi Indians of Michigan)
Ponca Tribe of Indians of Oklahoma
Ponca Tribe of Nebraska
Port Gamble Indian Community of the Port Gamble Reservation, Washington
Potter Valley Rancheria of Pomo Indians of California
Prairie Band of Potawatomi Nation, Kansas (formerly the Prairie Band of Potawatomi Indians)
Prairie Island Indian Community in the State of Minnesota (previously listed as the Prairie Island Indian Community of Minnesota Mdewakanton Sioux Indians of the Prairie Island Reservation, Minnesota)
Pueblo of Acoma, New Mexico
Pueblo of Cochiti, New Mexico
Pueblo of Jemez, New Mexico
Pueblo of Isleta, New Mexico
Pueblo of Laguna, New Mexico
Pueblo of Nambe, New Mexico
Pueblo of Picuris, New Mexico
Pueblo of Pojoaque, New Mexico
Pueblo of San Felipe, New Mexico
Pueblo of San Juan, New Mexico
Pueblo of San Ildefonso, New Mexico
Pueblo of Sandia, New Mexico
Pueblo of Santa Ana, New Mexico
Pueblo of Santa Clara, New Mexico
Pueblo of Santo Domingo, New Mexico
Pueblo of Taos, New Mexico
Pueblo of Tesuque, New Mexico
Pueblo of Zia, New Mexico
Puyallup Tribe of the Puyallup Reservation, Washington
Pyramid Lake Paiute Tribe of the Pyramid Lake Reservation, Nevada
Quapaw Tribe of Indians, Oklahoma
Quartz Valley Indian Community of the Quartz Valley Reservation of California
Quechan Tribe of the Fort Yuma Indian Reservation, California & Arizona
Quileute Tribe of the Quileute Reservation, Washington
Quinault Tribe of the Quinault Reservation, Washington
Ramona Band or Village of Cahuilla Mission Indians of California
Red Cliff Band of Lake Superior Chippewa Indians of Wisconsin
Red Lake Band of Chippewa Indians, Minnesota (previously listed as the Red Lake Band of Chippewa Indians of the Red Lake Reservation, Minnesota)
Redding Rancheria, California
Redwood Valley Rancheria of Pomo Indians of California
Reno-Sparks Indian Colony, Nevada
Resighini Rancheria, California (formerly the Coast Indian Community of Yurok Indians of the Resighini Rancheria)
Rincon Band of Luiseno Mission Indians of the Rincon Reservation, California
Robinson Rancheria of Pomo Indians of California
Rosebud Sioux Tribe of the Rosebud Indian Reservation, South Dakota
Round Valley Indian Tribes of the Round Valley Reservation, California (formerly the Covelo Indian Community)
Rumsey Indian Rancheria of Wintun Indians of California
Sac & Fox Tribe of the Mississippi in Iowa
Sac & Fox Nation of Missouri in Kansas and Nebraska
Sac & Fox Nation, Oklahoma
Saginaw Chippewa Indian Tribe of Michigan (previously listed as the Saginaw Chippewa Indian Tribe of Michigan, Isabella Reservation)
St. Croix Chippewa Indians of Wisconsin (previously listed as the St. Croix Chippewa Indians of Wisconsin, St. Croix Reservation)
St. Regis Band of Mohawk Indians of New York

Salt River Pima-Maricopa Indian Community of the Salt River Reservation, Arizona
Samish Indian Tribe, Washington
San Carlos Apache Tribe of the San Carlos Reservation, Arizona
San Juan Southern Paiute Tribe of Arizona
San Manual Band of Serrano Mission Indians of the San Manual Reservation, California
San Pasqual Band of Diegueno Mission Indians of California
Santa Rosa Indian Community of the Santa Rosa Rancheria, California
Santa Rosa Band of Cahuilla Mission Indians of the Santa Rosa Reservation, California
Santa Ynez Band of Chumash Mission Indians of the Santa Ynez Reservation, California
Santa Ysabel Band of Diegueno Mission Indians of the Santa Ysabel Reservation, California
Santee Sioux Tribe of the Santee Reservation of Nebraska
Sauk-Suiattle Indian Tribe of Washington
Sault Ste. Marie Tribe of Chippewa Indians of Michigan
Scotts Valley Band of Pomo Indians of California
Seminole Nation of Oklahoma
Seminole Tribe of Florida, Dania, Big Cypress, Brighton, Hollywood & Tampa Reservations
Seneca Nation of New York
Seneca-Cayuga Tribe of Oklahoma
Shakopee Mdewakanton Sioux Community of Minnesota (previously listed as the Shakopee Mdewakanton Sioux Community of Minnesota (Prior Lake))
Shawnee Tribe, Oklahoma
Sherwood Valley Rancheria of Pomo Indians of California
Shingle Springs Band of Miwok Indians, Shingle Springs Rancheria (Verona Tract), California
Shoalwater Bay Tribe of the Shoalwater Bay Indian Reservation, Washington
Shoshone Tribe of the Wind River Reservation, Wyoming
Shoshone-Bannock Tribes of the Fort Hall Reservation of Idaho
Shoshone-Paiute Tribes of the Duck Valley Reservation, Nevada
Sisseton-Wahpeton Sioux Tribe of the Lake Traverse Reservation, South Dakota
Skokomish Indian Tribe of the Skokomish Reservation, Washington
Skull Valley Band of Goshute Indians of Utah
Smith River Rancheria, California
Snoqualmie Tribe, Washington
Soboba Band of Luiseno Indians, California (formerly the Soboba Band of Luiseno Mission Indians of the Soboba Reservation)
Sokaogon Chippewa Community, Wisconsin (previously listed as the Sokaogon Chippewa Community of the Mole Lake Band of Chippewa Indians, Wisconsin)
Southern Ute Indian Tribe of the Southern Ute Reservation, Colorado
Spirit Lake Tribe, North Dakota
Spokane Tribe of the Spokane Reservation, Washington
Squaxin Island Tribe of the Squaxin Island Reservation, Washington
Standing Rock Sioux Tribe of North & South Dakota
Stockbridge Munsee Community, Wisconsin (previously listed as the Stockbridge-Munsee Community of Mohican Indians of Wisconsin)
Stillaguamish Tribe of Washington
Summit Lake Paiute Tribe of Nevada
Suquamish Indian Tribe of the Port Madison Reservation, Washington
Susanville Indian Rancheria, California
Swinomish Indians of the Swinomish Reservation, Washington
Sycuan Band of Diegueno Mission Indians of California
Table Bluff Reservation—Wiyot Tribe, California
Table Mountain Rancheria of California
Te-Moak Tribe of Western Shoshone Indians of Nevada (Four constituent bands: Battle Mountain Band; Elko Band; South Fork Band and Wells Band)
Thlopthlocco Tribal Town, Oklahoma
Three Affiliated Tribes of the Fort Berthold Reservation, North Dakota
Tohono O'odham Nation of Arizona
Tonawanda Band of Seneca Indians of New York
Tonkawa Tribe of Indians of Oklahoma
Tonto Apache Tribe of Arizona
Torres-Martinez Band of Cahuilla Mission Indians of California
Tule River Indian Tribe of the Tule River Reservation, California
Tulalip Tribes of the Tulalip Reservation, Washington
Tunica-Biloxi Indian Tribe of Louisiana
Tuolumne Band of Me-Wuk Indians of the Tuolumne Rancheria of California
Turtle Mountain Band of Chippewa Indians of North Dakota
Tuscarora Nation of New York
Twenty-Nine Palms Band of Mission Indians of California (previously listed as the Twenty-Nine Palms Band of Luiseno Mission Indians of California
United Auburn Indian Community of the Auburn Rancheria of California
United Keetoowah Band of Cherokee Indians in Oklahoma (previously listed as the United Keetoowah Band of Cherokee Indians of Oklahoma)
Upper Lake Band of Pomo Indians of Upper Lake Rancheria of California
Upper Sioux Community, Minnesota (previously listed as the Upper Sioux Indian Community of the Upper Sioux Reservation, Minnesota)
Upper Skagit Indian Tribe of Washington
Ute Indian Tribe of the Uintah & Ouray Reservation, Utah
Ute Mountain Tribe of the Ute Mountain Reservation, Colorado, New Mexico & Utah
Utu Utu Gwaitu Paiute Tribe of the Benton Paiute Reservation, California
Walker River Paiute Tribe of the Walker River Reservation, Nevada
Wampanoag Tribe of Gay Head (Aquinnah) of Massachusetts
Washoe Tribe of Nevada & California (Carson Colony, Dresslerville Colony, Woodfords Community, Stewart Community, & Washoe Ranches)
White Mountain Apache Tribe of the Fort Apache Reservation, Arizona
Wichita and Affiliated Tribes (Wichita, Keechi, Waco & Tawakonie), Oklahoma
Winnebago Tribe of Nebraska
Winnemucca Indian Colony of Nevada
Wyandotte Tribe of Oklahoma
Yankton Sioux Tribe of South Dakota
Yavapai-Apache Nation of the Camp Verde Indian Reservation, Arizona
Yavapai-Prescott Tribe of the Yavapai Reservation, Arizona
Yerington Paiute Tribe of the Yerington Colony & Campbell Ranch, Nevada
Yomba Shoshone Tribe of the Yomba Reservation, Nevada
Ysleta Del Sur Pueblo of Texas
Yurok Tribe of the Yurok Reservation, California
Zuni Tribe of the Zuni Reservation, New Mexico

Native Entities Within the State of Alaska Recognized and Eligible to Receive Services From the United States Bureau of Indian Affairs

Village of Afognak
Agdaagux Tribe of King Cove
Native Village of Akhiok
Akiachak Native Community
Akiak Native Community
Native Village of Akutan
Village of Alakanuk
Alatna Village
Native Village of Aleknagik
Algaaciq Native Village (St. Mary's)
Allakaket Village
Native Village of Ambler
Village of Anaktuvuk Pass
Yupiit of Andreafski
Angoon Community Association
Village of Aniak
Anvik Village
Arctic Village (See Native Village of Venetie Tribal Government)
Asa'carsarmiut Tribe (formerly the Native Village of Mountain Village)
Native Village of Atka
Village of Atmautluak

Atqasuk Village (Atkasook)
Native Village of Barrow Inupiat Traditional Government
Beaver Village
Native Village of Belkofski
Village of Bill Moore's Slough
Birch Creek Tribe
Native Village of Brevig Mission
Native Village of Buckland
Native Village of Cantwell
Native Village of Chanega (aka Chenega)
Chalkyitsik Village
Cheesh-Na Tribe (formerly the Native Village of Chistochina)
Village of Chefornak
Chevak Native Village
Chickaloon Native Village
Native Village of Chignik
Native Village of Chignik Lagoon
Chignik Lake Village
Chilkat Indian Village (Klukwan)
Chilkoot Indian Association (Haines)
Chinik Eskimo Community (Golovin)
Native Village of Chitina
Native Village of Chuathbaluk (Russian Mission, Kuskokwim)
Chuloonawick Native Village
Circle Native Community
Village of Clarks Point (previously listed as the Village of Clark's Point)
Native Village of Council
Craig Community Association
Village of Crooked Creek
Curyung Tribal Council (formerly the Native Village of Dillingham)
Native Village of Deering
Native Village of Diomede (aka Inalik)
Village of Dot Lake
Douglas Indian Association
Native Village of Eagle
Native Village of Eek
Egegik Village
Eklutna Native Village
Native Village of Ekuk
Ekwok Village
Native Village of Elim
Emmonak Village
Evansville Village (aka Bettles Field)
Native Village of Eyak (Cordova)
Native Village of False Pass
Native Village of Fort Yukon
Native Village of Gakona
Galena Village (aka Louden Village)
Native Village of Gambell
Native Village of Georgetown
Native Village of Goodnews Bay
Organized Village of Grayling (aka Holikachuk)
Gulkana Village
Native Village of Hamilton
Healy Lake Village
Holy Cross Village
Hoonah Indian Association
Native Village of Hooper Bay
Hughes Village
Huslia Village
Hydaburg Cooperative Association
Igiugig Village
Village of Iliamna
Inupiat Community of the Arctic Slope
Iqurmuit Traditional Council (formerly the Native Village of Russian Mission)
Ivanoff Bay Village
Kaguyak Village
Organized Village of Kake
Kaktovik Village (aka Barter Island)
Village of Kalskag
Village of Kaltag
Native Village of Kanatak
Native Village of Karluk
Organized Village of Kasaan
Native Village of Kasigluk
Kenaitze Indian Tribe
Ketchikan Indian Corporation
Native Village of Kiana
King Island Native Community
King Salmon Tribe
Native Village of Kipnuk
Native Village of Kivalina
Klawock Cooperative Association
Native Village of Kluti Kaah (aka Copper Center)
Knik Tribe
Native Village of Kobuk
Kokhanok Village
Native Village of Kongiganak
Village of Kotlik
Native Village of Kotzebue
Native Village of Koyuk
Koyukuk Native Village
Organized Village of Kwethluk
Native Village of Kwigillingok
Native Village of Kwinhagak (aka Quinhagak)
Native Village of Larsen Bay
Levelock Village
Lesnoi Village (aka Woody Island)
Lime Village
Village of Lower Kalskag
Manley Hot Springs Village
Manokotak Village
Native Village of Marshall (aka Fortuna Ledge)
Native Village of Mary's Igloo
McGrath Native Village
Native Village of Mekoryuk
Mentasta Traditional Council
Metlakatla Indian Community, Annette Island Reserve
Native Village of Minto
Naknek Native Village
Native Village of Nanwalek (aka English Bay)
Native Village of Napaimute
Native Village of Napakiak
Native Village of Napaskiak
Native Village of Nelson Lagoon
Nenana Native Association
New Koliganek Village Council (formerly the Koliganek Village)
New Stuyahok Village
Newhalen Village
Newtok Village
Native Village of Nightmute
Nikolai Village
Native Village of Nikolski
Ninilchik Village
Native Village of Noatak
Nome Eskimo Community
Nondalton Village
Noorvik Native Community
Northway Village
Native Village of Nuiqsut (aka Nooiksut)
Nulato Village
Nunakauyarmiut Tribe (formerly the Native Village of Toksook Bay)
Native Village of Nunapitchuk
Village of Ohogamiut
Village of Old Harbor
Orutsararmuit Native Village (aka Bethel)
Oscarville Traditional Village
Native Village of Ouzinkie
Native Village of Paimiut
Pauloff Harbor Village
Pedro Bay Village
Native Village of Perryville
Petersburg Indian Association
Native Village of Pilot Point
Pilot Station Traditional Village
Native Village of Pitka's Point
Platinum Traditional Village
Native Village of Point Hope
Native Village of Point Lay
Native Village of Port Graham
Native Village of Port Heiden
Native Village of Port Lions
Portage Creek Village (aka Ohgsenakale)
Pribilof Islands Aleut Communities of St. Paul & St. George Islands
Qagan Tayagungin Tribe of Sand Point Village
Qawalangin Tribe of Unalaska
Rampart Village
Village of Red Devil
Native Village of Ruby
Saint George Island (*See* Pribilof Islands Aleut Communities of St. Paul & St. George Islands)
Native Village of Saint Michael
Saint Paul Island (*See* Pribilof Islands Aleut Communities of St. Paul & St. George Islands)
Village of Salamatoff
Native Village of Savoonga
Organized Village of Saxman
Native Village of Scammon Bay
Native Village of Selawik
Seldovia Village Tribe
Shageluk Native Village
Native Village of Shaktoolik
Native Village of Sheldon's Point
Native Village of Shishmaref
Shoonaq' Tribe of Kodiak
Native Village of Shungnak
Sitka Tribe of Alaska
Skagway Village
Village of Sleetmute
Village of Solomon
South Naknek Village
Stebbins Community Association
Native Village of Stevens
Village of Stony River
Takotna Village
Native Village of Tanacross
Native Village of Tanana
Native Village of Tatitlek

Native Village of Tazlina
Telida Village
Native Village of Teller
Native Village of Tetlin
Central Council of the Tlingit & Haida Indian Tribes
Traditional Village of Togiak
Tuluksak Native Community
Native Village of Tuntutuliak
Native Village of Tununak
Twin Hills Village
Native Village of Tyonek
Ugashik Village
Umkumiute Native Village
Native Village of Unalakleet
Native Village of Unga
Village of Venetie (*See* Native Village of Venetie Tribal Government)
Native Village of Venetie Tribal Government (Arctic Village and Village of Venetie)
Village of Wainwright
Native Village of Wales
Native Village of White Mountain
Wrangell Cooperative Association
Yakutat Tlingit Tribe

[FR Doc. 02–17508 Filed 7–11–02; 8:45 am]
BILLING CODE 4310–4J–P

Federal Register

Friday,
July 12, 2002

Part V

Department of Housing and Urban Development

Notice on Applying to HUD for Designation of State or Locally Developed Housing in the State of New York as ''Covered Units'' Eligible for Inclusion in the Federal Public Housing Program

DEPARTMENT OF HOUSING AND URBAN DEVELOPMENT

[Docket No. FR–4774–N–01]

Notice on Applying to HUD for Designation of State or Locally Developed Housing in the State of New York as ''Covered Units'' Eligible for Inclusion in the Federal Public Housing Program

AGENCY: Office of the Assistant Secretary for Public and Indian Housing, HUD.

ACTION: Notice to public housing agencies on applying to HUD for designation of certain New York state public housing units as Federally covered units.

SUMMARY: The purpose of this Notice is to: advise public housing agencies (PHAs) in the State of New York on applying for designation of public housing units developed and funded in accordance with New York law as ''covered units,'' up to 7,000 of which will be eligible to receive Federal public housing operating and capital funds allocated according to statutory and regulatory formulas; obtain information about all developments and units that could be ''covered units''; and obtain PHAs' preferences as to which of their developments and units they would want included in the Federal housing program.

DATES: PHAs must respond by: September 10, 2002.

ADDRESSES: Submit one original set of information requested in this notice to HUD Headquarters at the following address: HUD Office of Public and Indian Housing, Grants Management Center, 501 School St. SW., 8th Floor, Washington, DC 20024.

Provide one copy of the information requested in this notice to the local HUD Program Center or HUB.

FOR FURTHER INFORMATION CONTACT: Sherry Fobear-McCown, Program Analyst, Office of Policy, Program and Legislative Initiatives, Office of Public and Indian Housing, Department of Housing and Urban Development, 451 Seventh Street, SW, Room 4116, Washington, DC 20410; telephone: (202) 708–0713 (this is not a toll-free number). Persons with hearing or speech impairments may access that number via TTY by calling the Federal Information Relay Service at (800) 877–8339.

SUPPLEMENTARY INFORMATION:

I. Background

Section 9(n) of the United States Housing Act of 1937 (1937 Act), added by section 519 of the Quality Housing and Work Responsibility Act of 1998 (Title V of Pub. L. 105–276), authorized the Secretary of HUD to include State and locally developed public housing units developed under New York law into the Federal public housing program for purposes of receiving allocations of operating and capital funds pursuant to statutory and regulatory formulas. This provision authorizes the inclusion of not more than 7,000 units in New York in the federal public housing program. However, a separate provision of the same law (Sec. 226 of Pub. L. 105–276) prohibited the use of these Federal funds to provide new assistance for State and locally developed public housing units. These conflicting provisions gave rise to legal questions concerning HUD's authority and responsibility to implement section 9(n). Both the United States District Court for the Southern District of New York and the United States Court of Appeals for the Second Circuit have issued decisions this year, indicating that implementation of section 9(n) should proceed retroactive to Fiscal Year 2000.

II. Eligibility

A New York public housing agency that operates, owns, or manages covered locally developed public housing units is eligible to seek inclusion of those units in the Federal public housing program. The term ''covered locally developed public housing units'' is defined by section 9(n)(1)(b) of the 1937 Act as public housing units developed pursuant to laws of the State of New York and that received debt service and operating subsidies pursuant to such laws.

III. Funding

Funding for ''covered units'' will be provided from the public housing Operating Fund and Capital Fund. Funding for ''covered units'' will cover Fiscal Year 2000 through 2003 and thereafter, and will directly reduce the amount of Operating Fund and Capital Fund monies in Fiscal Year 2003 and thereafter that would otherwise be distributed to all public housing agencies.

IV. Response Due Date and Address for Submission

Information requested by this notice, and in the form and manner described in this Notice, is due no later than September 10, 2002. No exceptions to this deadline will be considered. Submit one original set of documents to HUD Headquarters at the following address and one copy to the local HUB or Program Center: HUD Office of Public and Indian Housing, Grants Management Center, Michael E. Diggs, Director, 501 School St. SW., 8th Floor, Washington, DC 20024, Telephone: (202) 358–0221 (this is not a toll-free number). Persons with hearing or speech impairments may access that number via TTY by calling the Federal Information Relay Service at (800) 877–8339.

V. Required Materials

PHAs interested in having units designated as ''covered units'' shall submit the following information for *all* units they administer that were developed pursuant to the laws of the State of New York and that received debt service and operating subsidies pursuant to such laws. This information will be used to aid HUD in determining which units shall receive the ''covered'' designation.

Provide the following in the order it is presented. Items 1–11 shall be submitted for each site:

(1) Name of development;

(2) Number of units;

(3) Location (census tract);

(4) Age and general condition;

(5) Composition of units by bedroom size, and family, elderly, or disabled designation;

(6) Current vacancy rate and vacancy rate for past two years;

(7) If readily available, actual operating expenses for the last two fiscal years; if such information is not readily available, list any unusually large recent, current, or projected operating costs (e.g. extraordinarily high utilities costs);

(8) Summary of large capital improvements made over preceding five-year period;

(9) Projected capital needs for next five years;

(10) Debt service amounts (if any);

(11) Extraordinary liabilities the Federal government may need to assume (e.g., litigation);

(12) Most recent Public Housing Assessment System (PHAS) rating and designation for the PHA from HUD, or copy of any recent performance assessment from applicable State or local government or other independent entity; and

(13) Other information requested by HUD as necessary to complete its review.

In addition, the PHA shall identify in its submission the developments and total number of units it seeks to include in the Federal public housing program and any other factors HUD should take into account.

Paperwork Reduction Act Statement

The information collection requirements contained in this notice NOFA have been submitted to the Office of Management and Budget (OMB) for emergency approval under the Paperwork Reduction Act of 1995 (44 U.S.C. 3501–3520). Upon approved, the OMB Control Number will be published in a separate notice. An agency may not conduct or sponsor, and a person is not required to respond to, a collection of information unless the collection displays a valid control number.

VI. Final Approval

Final approval and funding, for both fiscal years commencing with Fiscal Year 2000 and future fiscal years, are subject to any further relevant legislative action; acceptable submission and HUD approval of all information required by this Notice; documentation of sufficient managerial competence HUD may require if PHAS or other assessments of competence are not applicable or sufficient; an independent physical inspection satisfactory to HUD; and the execution of an Annual Contributions Contract (ACC) or ACC amendment including the covered units selected pursuant to this Notice.

Dated: June 27, 2002.

Michael Liu,

Assistant Secretary for Public and Indian Housing.

[FR Doc. 02–17605 Filed 7–11–02; 8:45 am]

BILLING CODE 4210–33–P

Federal Register

Friday,
July 12, 2002

Part VI

Department of Health and Human Services

Office of Community Services

Fiscal Year 2002 Training, Technical Assistance and Capacity-Building Program; Availability of Funds and Request for Applications, Spring, 2002 Announcement; Notices

DEPARTMENT OF HEALTH AND HUMAN SERVICES

Office of Community Services

[Program Announcement No. OCS 2002–13]

Fiscal Year 2002 Training, Technical Assistance and Capacity-Building Program; Availability of Funds and Request for Applications, Spring, 2002 Announcement

AGENCY: Office of Community Services (OCS), Administration for Children and Families (ACF), Department of Health and Human Services (DHHS).

ACTION: Request for applications under the Office of Community Services' Training, Technical Assistance and Capacity-Building Program.

SUMMARY: The Office of Community Services announces that competing applications will be accepted for new grants pursuant to the Secretary's authority under Section 674(b) of the Community Services Block Grant (CSBG) Act, as amended, by the Community Opportunities, Accountability, and Training, and Educational Services (Coats) Human Services Reauthorization Act of 1998, (Pub. L. 105–285). This program announcement consists of seven parts. Part A provides information on the legislative authority and defines terms used in the program announcement. Part B describes the purposes of the program, the priority areas that will be considered for funding, and which organizations are eligible to apply in each priority area. Part C provides details on application prerequisites, anticipated amounts of funds available in each priority area, estimated number of grants to be awarded, and other grant-related information. Part D provides information on application procedures including the availability of forms, where to submit an application, criteria for initial screening of applications, and project evaluation criteria. Part E provides guidance on the content of an application package. Part F provides instructions for completing an application. Part G details post-award requirements.

DATES: The closing date for submission of applications is August 26, 2002. The closing date for receipt of applications is 4:30 p.m. Eastern time zone. Applications received after 4:30 p.m. on the closing date will be classified as late. Postmarks and other similar documents do not establish receipt of an application. Detailed application submission instructions, including addresses where applications must be sent are found in Part D of this program announcement.

FOR FURTHER INFORMATION CONTACT: Margaret Washnitzer, Director, Division of State Assistance, Office of Community Services, Administration for Children and Families, 370 L'Enfant Promenade, SW, Washington, DC 20447, (202) 401–9343. This program announcement, along with the necessary applications forms, is accessible on the OCS web site for reading or downloading at: *http://www.acf.dhhs.gov/programs/ocs* Additional copies of this program announcement can be obtained by calling (202) 401–9343.

The Catalog of Federal Domestic Assistance number is ''93.570.'' This Program announcement title is ''Training, Technical Assistance, and Capacity-Building Program.''

Part A—Preamble

1. Legislative Authority

Sections 674(b)(2) and 678A(a)(1)(A) of the Community Services Block Grant (CSBG) Act of 1981, (Pub. L. 97–35) as amended by the Coats Human Services Reauthorization Act of 1998, (Pub. L. 105–285) authorizes the Secretary of Health and Human Services to utilize a percentage of appropriated funds for: Training, technical assistance, planning, evaluation, performance measurement, monitoring, to assist States in carrying out corrective actions and to correct programmatic deficiencies of eligible entities, and for reporting and data collection activities related to programs or projects carried out under the CSBG Act. The Secretary may carry out these activities through grants, contracts, or cooperative agreements. To address program quality in financial management practices, management information and reporting systems, measurement of program results, and to ensure responsiveness to identified local needs, the Secretary is required to distribute funds directly to eligible entities, or statewide or local organizations (including faith-based organizations) or associations with demonstrated expertise in providing training to individuals and organizations on methods of effectively addressing the needs of low-income families and communities. The Secretary may carry out the remaining activities through appropriate entities.

The process for determining the technical assistance, training and capacity-building activities to be carried out must (a) ensure that the needs of eligible entities and programs relating to improving program quality, including financial management practices, are addressed to the maximum extent feasible; and (b) incorporate mechanisms to ensure responsiveness to local needs, including an on-going procedure for obtaining input from State and national networks of eligible entities. Thus, the CSBG Monitoring and Assessment Task Force (MATF) continues to focus on implementation of the Results-Oriented Management and Accountability (ROMA) system to address the challenges and unmet needs of States and Community Action Agencies and to increase program quality and management within the Community Services Network. The Task Force has taken a comprehensive approach to monitoring, including establishing national goals and outcome measures and target dates for nation-wide implementation; reviewing data needs relevant to these outcome measures; and assessing technical assistance and training provided toward capacity building within the Community Services Network.

2. Definitions of Terms

For purposes of the FY 2001 CSBG Training, Technical Assistance and Capacity-Building Program, the following definitions apply:

At-Risk Agencies refers to CSBG eligible entities in crises. The problem(s) to be addressed must be of a complex or pervasive nature that cannot be adequately addressed through existing local or State resources.

Capacity-building refers to activities that assist Community Action Agencies (CAAs) and other eligible entities to improve or enhance their overall or specific capability to plan, deliver, manage and evaluate programs efficiently and effectively to produce intended results for low-income individuals. This may include upgrading internal financial management or computer systems, establishing new external linkages with other organizations, improving board functioning, adding or refining a program component or replicating techniques or programs piloted in another local community, or making other cost effective improvements.

Community in relationship to broad representation refers to any group of individuals who share common distinguishing characteristics including residency, for example, the ''low-income'' community, or the ''religious'' community or the ''professional'' community. The individual members of these ''communities'' may or may not reside in a specific neighborhood, county or school district but the local service provider may be implementing programs and strategies that will have a measurable affect on them. Community

in this context is viewed within the framework of both community conditions and systems, i.e., (1) public policies, formal written and unstated norms adhered to by the general population; (2) service and support systems, economic opportunity in the labor market and capital stakeholders; (3) civic participation; and (4) an equity as it relates to the economic and social distribution of power.

Community Services Network (CSN) refers to the various organizations involved in planning and implementing programs funded through the Community Services Block Grant or providing training, technical assistance or support to them. The network includes local Community Action Agencies and other eligible entities; State CSBG offices and their national association; CAA State, regional and national associations; and related organizations which collaborate and participate with Community Action Agencies and other eligible entities in their efforts on behalf of low-income people.

Cooperative Agreement is an award instrument of financial assistance where ''substantial involvement'' is anticipated between the awarding agency and the recipient during the performance of the contemplated project or activity. ''Substantial involvement'' means that the recipient can expect Federal programmatic collaboration or participation in managing the award. The specific responsibilities of the awarding agency and the recipient will be determined as part of the process of creating the cooperative agreement.

Eligible applicants described in this announcement shall be eligible entities, organizations (including faith-based and community-based) or associations with demonstrated expertise in providing training to individuals and organizations on methods of effectively addressing the needs of low-income families and communities. See description of Eligible Entities below.

Eligible entity means any organization that was officially designated as a Community Action Agency (CAA) or a community action program under section 673(1) of the Community Services Block Grant Act, as amended by the Human Services Amendments of 1994 (Pub. L. 103–252), and meets all the requirements under Sections 673(1)(A)(I), and 676A of the CSBG Act, as amended by the Coats Human Services Reauthorization Act of 1998. All eligible entities are current recipients of Community Services Block Grant funds, including migrant and seasonal farmworker organizations that received CSBG funding in the previous fiscal year. In cases where eligible entity status is unclear, a final determination will be made by OCS/ACF.

Hub is a Department of Health and Human Services designation for multiple regional locations.

Local service providers are local public or private non-profit agencies that receive Community Services Block Grant funds from States to provide services to, or undertake activities on behalf of, low-income people.

Nationwide refers to the scope of the technical assistance, training, data collection, or other capacity-building projects to be undertaken with grant funds. Nationwide projects must provide for the implementation of technical assistance, training or data collection for all or a significant number of States, and the local service providers who administer CSBG funds.

Non-profit Organization refers to an organization, including faith-based, which has ''demonstrated experience in providing training to individuals and organizations on methods of effectively addressing the needs of low income families and communities.'' Acceptable documentation for eligible non-profit status is limited to: (1) A copy of a current, valid Internal Revenue service tax exemption certificate; (2) a copy of the applicant organization's listing in the Internal Revenue Service's most recent list of tax-exempt organizations described in section 501(c)(3) of the IRS code; and/or (3) Articles of incorporation bearing the seal of the State in which the corporation or association is domiciled.

Outcome Measures are indicators that focus on the direct results one wants to have on customers.

Performance Measurement is a tool used to objectively assess how a program is accomplishing its mission through the delivery of products, services, and activities.

Program technology exchange refers to the process of sharing expert technical and programmatic information, models, strategies and approaches among the various partners in the Community Services Network. This may be done through written case studies, guides, seminars, technical assistance, and other mechanisms.

Regional Networks refers to CAA State Associations within a region.

Results-Oriented Management and Accountability (ROMA) System: ROMA is a system, which provides a framework for focusing on results for local agencies funded by the Community Services Block Grant Program. It involves setting goals and strategies and developing plans and techniques that focus on a result-oriented performance based model for management.

State means all of the 50 States and the District of Columbia. Except where specifically noted, for purposes of this program announcement, it also includes specified Territories.

State CSBG Lead Agency (SCLA) is the lead agency designated by the Governor of the State to develop the State CSBG application and to administer the CSBG Program.

Statewide refers to training and technical assistance activities and other capacity building activities undertaken with grant funds that will have significant impact, i.e. activities should impact at least 50 percent of the eligible entities in a State.

Technical assistance is an activity, generally utilizing the services of an expert (often a peer), aimed at enhancing capacity, improving programs and systems, or solving specific problems. Such services may be provided proactively to improve systems or as an intervention to solve specific problems.

Territories refer to the Commonwealth of Puerto Rico, and American Samoa for the purpose of this announcement.

Training is an educational activity or event which is designed to impart knowledge, understanding, or increase the development of skills. Such training activities may be in the form of assembled events such as workshops, seminars, conferences or programs of self-instructional activities.

Part B—Purposes/Program Priority Areas

The principal purposes of this Training, Technical Assistance and Capacity-Building announcement are to:

Provide an opportunity for national associations that provide training and technical assistance to the Community Services Network to extend and enhance their efforts;

Continue a national effort to build strong administration and financial management capabilities among ''at risk'' local community action programs through crisis aversion intervention and timely technical assistance; and

Clarify and re-announce a competition for grants to promote partnerships between community action agencies and other service providers, including faith-based organizations, to promote achievement of ROMA client and community goals. An original competition for such grants, announced as Priority Area 4.0, *Partnerships Among Suppliers and Providers of Service to Low-Income People,* in the January 18, 2002

Federal Register, was suspended. Previous applicants have the opportunity to re-apply under Priority 2.0, Strengthening Partnerships, prior to the closing date of this announcement.

Priority areas of the Office of Community Services' Fiscal Year 2002 Spring Training, Technical Assistance and Capacity-Building Program are as follows:

Priority Area 1.0: National CAA Capacity Building

Sub-Priority Areas:
1.1 National Training (NT)
1.2 Strengthening CAA Capacity to Address Legal Issues (LF)
1.3 National Peer to Peer Assistance (PP)

Priority Area 2.0: Strengthening Partnerships

Sub-Priority Areas:
2.1 Coordination Strategies Between Community Action and Other Service Providers, Including Faith-Based Organizations to Advance ROMA Client Goals 1 and 6 (FP)
2.2 Coordination Strategies Between Community Action And Other Service Providers, Including Faith-Based Organizations to Advance ROMA Community Goals 2 and 3 (FC)

Priority Area 1.0: National CAA Capacity Building

This priority area addresses activities to assist states and eligible entities to acquire skills and further understand legal frameworks for community action. In order to ensure that OCS meets its compliance and technical assistance responsibilities for the CSBG Program and continues its effective partnership with the Community Services Network, grants awarded under Priority 1.1 will be funded in the form of a Cooperative Agreement. A Cooperative agreement is to be renewed annually for a specified number of years.

Sub-Priority 1.1: National Training (NT)

OCS will fund one national organization associated with community action to: (a) Re-engage the public in an on-going dialogue about the conditions of poverty and how community action at the State and local levels may address those conditions more effectively; (b) identify and promote strategies for integrating services within communities to address the multiple conditions of poverty among individuals and families and that help them achieve greater self-sufficiency; (c) identify and promote strategies for improving the supportive conditions of communities in which poor families live; and (d) identify and promote community action strategies for strengthening the family environment in which children are raised through greater engagement of fathers and the promotion of healthy marriages. In addition, OCS will support an effort to identify and reward ''excellence'' among community action programs that have achieved measurable outcomes in one or more of the areas described above.

Eligible Applicants: National non-profit associations representing Community Action Agencies.

Anticipated Grant Awards: One cooperative agreement (up to $500,000 annually for a maximum of three years).

Sub-Priority 1.2: Strengthening CAA Capacity to Address Legal Issues (LF)

OCS will fund one national non-profit organization to provide legal assistance to local community action agencies to help them improve the lives of clients and the conditions of communities in which they live. Specifically, the successful applicant will provide legal assistance to: (1) Help agencies understand and advocate for the rights of clients in such matters as community governance and/or service eligibility; (2) safeguard the statutory role of agencies as client and community advocates; (3) interpret Federal, State, and local statutes or regulations that pertain to the roles and functions of community action; and (4) assist local agencies involved in litigation or formal administrative actions to obtain appropriate legal counsel.

Eligible Applicants: National, non-profit legal services organizations.

Anticipated Grant Awards: One grant (up to $250,000 annually for a maximum of three years).

Sub-Priority 1.3: National Peer-to-Peer Assistance

The purpose of this Sub-Priority is to continue to strengthen the fiscal and management capacity of eligible entities, especially those that may be considered ''at risk.'' OCS will fund one project which will provide coordinated, timely, peer-to-peer technical assistance and crisis aversion intervention for CAAs which have identified themselves as experiencing programmatic, administrative, board, and/or fiscal management problems. Peer-to-peer assistance may involve helping an agency resolve adverse program monitoring or audit findings, improve or upgrade financial management systems, prevent losses of funds, avert serious deterioration of the board of directors, or other immediate problems that prevent the agency carrying out their client and community service obligations.

Eligible Applicants: Community action agencies and other eligible entities and state-wide organizations or associations of community action agencies.

Anticipated Grant Awards: One grant (up to $300,000 annually for a maximum of two years).

Priority Area 2.0: Strengthening Partnerships

One of the primary goals of the Administration is to encourage expansion of the number and kinds of organizations devoted to helping communities and low-income citizens achieve their potential. The Administration has developed a ''Faith-based and Community-based Initiative'' that has, among other things, called for the removal of barriers thereby creating greater participation of faith-based groups in providing community services, and stronger coordination among all service organizations within a community that address the needs of low-income citizens.

OCS recognizes that the Community Services Network (CSN) has a long history of forming partnerships with a variety of service providers at the community level, including faith-based organizations. OCS intends to encourage further expansion of such collaborative efforts to achieve both client and community goals.

OCS intends to fund the development and dissemination of two technical assistance documents intended to help partners in the CSN, at both the State and community levels, learn ways to enhance collaboration of community action with other service providers, including faith-based and community organizations. In addition, OCS will support capacity-building efforts in selected States and/or communities to form new or expanded community action partnerships to achieve specific client or community results, and to disseminate the results of these capacity-building efforts to the Network.

Sub-Priority Area 2.1 Coordination Strategies Between Community Action Agencies and Other Service Providers, Such As Faith-Based, Charitable, and/or Other Community Groups, to Advance ROMA Client Goals 1 and 6 (FP)

OCS will fund up to four technical assistance and capacity building efforts to promote the achievement of client-focused Goals 1 and 6:

Guide to Achieving Client Outcomes Through Community Action Partnerships with Other Service Providers, Such As Faith-Based, Charitable, and/or Other Community Groups—OCS will support the development of a technical assistance guide to help State and local community

action agencies learn of ways to establish or expand partnerships with other service providers, such as faith-based, charitable, and/or other community groups, to advance client-focused community action ROMA Goals 1 and 6—client/family self-sufficiency and family strengthening. Specifically, the successful applicant for the grant to develop this guide will describe in its application how it will: (1) Identify State or local partners within the CSN that have a history of successful linkage/collaboration with other providers, such as faith-based, charitable, and/or other community groups working to achieve client-focused outcomes; (2) gather information about the ways these partnerships have been achieved, including formal and informal methods for establishing and maintaining the collaboration, interchange of information, human and financial resources, client referral and case management, and capturing and reporting results; (3) gather insights and analyses from participating community action and other service provider staff on particular strengths and challenges of such collaboration; and (4) develop a guide based on the information described above in a manner useful to the CSN.

Eligible Applicants: State CSBG Lead Agencies, State CAA Associations, local CSBG eligible entities, and non-profit organizations.

Anticipated Grant Awards: One (up to $45,000 for 12 months).

Capacity-Building Grants to Promote Self-sufficiency and/or Family Strengthening Through Collaboration Between Community Action and Other Service Providers, Including Faith-Based and Community Organizations—OCS will fund between one and three States or local community action agencies or other non-profit service providers, to build new or expanded collaborations. Specifically, OCS seeks to encourage innovative work among organizations to promote client/family self-sufficiency and/or to strengthen families. The successful applicant(s) will describe in their application(s): (1) The specific goal(s) they intend to advance through new or expanded partnerships between community action and other service providers, including faith-based and community organizations; (2) the specific and measurable client-focused results the proposed collaboration(s) are intended to achieve and the means by which such results will be measured and reported; (3) the particular contributions each organizational partner will bring to the collaboration, including special skills, and human and financial resources; (4) evidence of previous success, including descriptions of other collaborations, and measurable client improvements that resulted from such collaborative work; and (5) formal letters of agreement and participation among all collaborating organizations with specific descriptions of anticipated contributions of resources and time to the effort.

Eligible Applicants: State CSBG Lead Agencies, State CAA Associations, eligible entities, and non-profit organizations.

Anticipated Grant Awards: Up to three ($20,000 each for 12 months).

Sub-Priority Area 2.2 Coordination Strategies Between Community Action Agencies and Other Service Providers, Such as Faith-Based, Charitable, and/or Other Community Groups To Advance ROMA Community Goals 2 and 3 (FC)

As with sub-priority area 2.1, OCS will fund up to four grants to promote the achievement of community-focused goals (community development and citizen empowerment) through new or expanded collaboration between community action and other service providers, such as faith-based, charitable, and/or other community groups. OCS will solicit applications in two categories:

Guide to Achieving Community Development/Citizen Empowerment Goals Through Collaboration Between Community Action and other Service Providers, Such as Faith-Based, Charitable, and/or Other Community Groups—OCS will support the development of a technical assistance guide to help State and local community action agencies learn of ways to establish or expand partnerships with other service providers to advance community development and citizen empowerment—ROMA national goals 2 and 3.

Specifically, the successful applicant for the grant to develop this guide will describe in its application how it will: (1) Identify State or local partners within the Network that have a history of successful linkage/collaboration with other service providers, such as faith-based, charitable, and/or other community groups, to achieve community outcomes; (2) gather information about the ways these partnerships have been achieved, including formal and informal methods for establishing and maintaining the collaboration, interchange of information, human and financial resources, client referral and case management, and capturing and reporting results; (3) gather insights and analyses from participating community action other service provider staff and clients on particular strengths and challenges of such collaboration; and (4) develop a guide based on the information described above in a manner useful to the CSN.

Eligible Applicants: State CSBG Lead Agencies, State CAA Associations, local eligible entities, and non-profit organizations.

Anticipated Grant Awards: One (up to $45,000 for 12 months).

Capacity-Building Grants to Promote Community Development and/or Citizen Empowerment Through Collaboration Between Community Action and Other Service Providers, Such as Faith-Based, Charitable, and/or Other Community Groups—OCS will fund between one and three States or local community action agencies or other non-profit organizations, to build new or expanded collaborations. Specifically, OCS seeks to encourage innovative work among organizations to promote community development and/or citizen empowerment. The successful applicant(s) will describe in their application(s): (1) The specific goal(s) they intend to advance through new or expanded partnerships between community action other service providers, including faith-based and community organizations; (2) the specific and measurable community and client-focused results the proposed collaboration(s) are intended to achieve and the means by which such results will be measured and reported; (3) the particular contributions each organizational partner will bring to the collaboration, including special skills, and human and financial resources; (4) evidence of previous success, including descriptions of other collaborations, and measurable community and client improvements that resulted from such collaborative work; and (5) formal letters of agreement and participation among all collaborating organizations with specific descriptions of anticipated contributions of resources and time to the effort.

Eligible Applicants: State CSBG Lead Agencies, State CAA Associations, local eligible entities, and non-profit organizations

Anticipated Grant Awards: Up to three ($20,000 each for 12 months).

Part C—Application Prerequisites

1. Eligible Applicants

See individual sub-priority areas in Part B.

2. Forms of Awards

The Office of Community Services intends to support grants for successful

applicants under all priority areas with the exception of one cooperative agreement under Sub-Priority Area 1.1. A cooperative agreement is an award instrument of financial assistance when substantial involvement is anticipated between the awarding office and the recipient organization during performance of the contemplated project.

OCS invites qualified entities to submit competing grant applications for the award of cooperative agreements under the FY 2002 Spring Training, Technical Assistance and Capacity Building Program Announcement. The purpose of the cooperative agreement is to assure that there is increased capacity in the community services network to provide national ROMA training, timely, coordinated peer-to-peer-technical assistance to address crises at the local level by CSBG-service providers; and to develop tools to promote collaboration between community action and other community groups, including faith-based/charitable organizations. The duties and responsibilities of the applicant and ACF/OCS in fulfilling the agreement will include the following:

Applicant Role and Responsibilities

1. Develop and implement work plans that will ensure that the services and activities approved in the application address the training and technical assistance needs of the community services network based on the requirement for specified projects.

2. Collaborate with the OCS to finalize the major goals and objectives of the overall project and exchange information on strategies for achieving the goals and objectives.

3. Provide a plan to access the outcomes of the project quarterly.

4. Promote the involvement of OCS in applicant meetings, conferences and initiatives to strengthen the knowledge base of the applicant and the OCS.

OCS Roles and Responsibilities

1. Within 60 days of the award of the grant, OCS will meet with the grantee to coordinate and develop a joint work plan with agreed upon short- and long-term priorities based on the applicant's work plan.

2. Discuss mechanisms of obtaining project status.

3. Through the duration of the cooperative agreement, review and comment on materials prior to their finalization.

4. Promote the involvement of OCS in applicant meetings, conferences and initiatives to strengthen the knowledge base of the applicant and the OCS.

5. Promote the involvement of OCS in applicant meetings, conferences and initiatives to strengthen the knowledge base of the applicant and the OCS.

6. Work collaboratively with the grantee in reviewing and providing feedback to address need for project adjustments and updates.

7. Develop any special conditions related to implementation of such projects.

3. Availability of Funds

The total amount of funds currently available for new grants and one cooperative agreement in FY 2002 under this Program Announcement is $1,260,000. For multi-year projects, continued funding is dependent upon proof of satisfactory performance and the availability of Federal funds. Amounts expected to be available and numbers of grants under each sub-priority area stated in Part B are as follows:

Sub-priority area	Approx. funds available for new projects	Estimated number of new grants
1.1: National Training (NT)	$500,000	1
1.2: Strengthen CAA Capacity to Address Legal Issues (LF)	250,000	1
1.3: National Peer-to-Peer Assistance (PP)	300,000	1
2.1 Coordination Strategies Between Community Action and Other Service Providers, Including Faith-Based and Community Organizations, to Advance ROMA Client Goals I and VI (FP).	105,000	4
Guide ($45,000)		
Capacity Building ($60,000)		
2.2 Coordination Strategies Between Community Action And Other Service Providers, Including Faith-Based Organizations, to Advance ROMA Community Goals II and III (FC).	105,000	4
Guide ($45,000)		
Capacity Building ($60,000)		
Total	1,260,000	Up to 11 Grants

4. Project and Budget Periods

This announcement is inviting applications for project periods up to 3 years. Awards, on a competitive basis, will be for a one-year budget period, although project periods may be for up to 3 years. Applications for continuation grants funded under these awards beyond the one-year budget period but within the 3 year project period will be entertained in subsequent years on a noncompetitive basis, subject to availability of funds, satisfactory progress of the grantee and a determination that continued funding would be in the best interest of the Government.

Note: Please note that specific project periods under this announcement vary depending on the Sub-Priority Area.

5. Project Beneficiaries

The overall intended beneficiaries of the projects to be funded under this Spring FY 2002 CSBG Training, Technical Assistance and Capacity Building Program Announcement are the various ''partners'' in the Community Services Network. Specific beneficiaries are indicated under each sub-priority area in Part B.

6. Sub-Contracting or Delegating Projects

OCS will not fund any project where the role of the applicant is primarily to serve as a conduit for funds to organizations other than the applicant. This prohibition does not bar the making of subgrants or subcontracting for specific services or activities needed to conduct the project. However, the applicant must have a substantive role in the implementation of the project for which funding is requested.

7. Separate Multiple Applications

Separate applications must be made for each sub-priority area. An applicant

will receive only one grant in a sub-priority area. Applicants that receive more than one grant for a common budget and project period must be mindful that salaries and wages claimed for the same persons cannot collectively exceed 100 percent of the total annual salary. The sub-priority area must be clearly identified by title and number.

8. Project Evaluations

Each application must include an assessment or self-evaluation to determine the degree to which the goals and objectives of the project are met, such as client satisfaction surveys, administration of simple before/after tests of knowledge with comparison of scores to show grasp of teaching points, simple measures of the results of service delivery, and others as appropriate. Goal setting and goal measurement should be the framework for evaluation. Goals, to the extent suitable, should be impact-oriented.

Part D—Application Procedures

Availability of Forms

Applications for awards under this Spring FY 2002 CSBG Training, Technical Assistance and Capacity Building Program must be submitted on Standard Forms (SF) 424, 424A, and 424B. Part F and the attachments to this program announcement contain all the instructions and forms required for submission of an application. These forms may be photocopied for use in developing the application.

Part F also contains instructions for the project narrative. The project narrative must be submitted on plain bond paper along with the SF–424 and related forms.

A copy of this program announcement and the required forms are available on the Internet through the OCS web site at: *http://www.acf.dhhs.gov/programs/ocs.*

If the program announcement cannot be accessed through the OCS web site, it can be obtained by writing or telephoning the office listed under the section entitled **FOR FURTHER INFORMATION** at the beginning of this program announcement.

2. Deadlines

Refer to the section entitled ''Closing Date'' at the beginning of this program announcement for the last day on which applications should be submitted.

Mailed applications shall be considered as meeting the announced deadline if they are received on or before deadline time and date. Applicants are responsible for mailing applications well in advance when using all mail services to ensure that the applications are received on or before the deadline time and date. Mailed applications must be sent to: U.S. Department of Health and Human Services, Administration for Children and Families, Office of Grants Management, ''Attention: CSBG Training, Technical Assistance, and Capacity Building Program'', 370 L'Enfant Promenade, SW., 4th Floor, Washington, DC 20447.

Applications hand-carried by applicants, applicant couriers, or by overnight/express mail couriers, shall be considered as meeting an announced deadline if they are received on or before the deadline date, between the hours of 8 a.m. and 4:30 p.m. EST, Monday through Friday, excluding Federal holidays, at the: Administration for Children and Families, Office of Grants Management, ''Attention: CSBG Training, Technical Assistance and Capacity Building Program'', 901 D Street, SW., 2nd Floor Mailroom, Washington, DC 20024.

ACF cannot accommodate transmission of applications by fax or through other electronic media. Therefore, applications transmitted to ACF electronically will not be accepted regardless of date or time of submission and time of receipt. Applications, once submitted, are considered final and no additional materials will be accepted.

Late applications. Applications that do not meet the criteria above are considered late applications. ACF shall notify each late applicant that its application will not be considered in the current competition.

Extension of deadlines. ACF may extend the deadline for all applicants affected by acts of God such as floods and hurricanes, when there is widespread disruption of the mail service. A determination to extend or waive deadline requirements rest with the Chief Grants Management Officer.

3. Number of Copies Required

One signed original application and two copies should be submitted at the time of initial submission (OMB 0970–0062).

4. Designation of Sub-Priority Area

The first page of the SF–424 must contain in the lower right-hand corner a designation indicating under which sub-priority are funds are being requested. For example, if you are applying for Sub-Priority Area 2.6—Local Capacity Building, you must have a designation of 2.6 in the lower right-hand corner. Without this clear designation, your proposal may not be reviewed correctly.

5. Paperwork Reduction Act of 1995 (Pub. L. 104–13)

Public reporting burden for this collection of information is estimated to average 10 hours per response, including time for reviewing instructions, gathering and maintaining the data needed and reviewing the collection of information.

All information collections within this Program Announcement are approved under OMB Control Number 0970–0062 which expires 12/31/2003.

An agency may not conduct or sponsor and a person is not required to respond to, a collection of information unless it displays a currently valid OMB control number.

6. State Single Point of Contact (SPOC)

This program is covered under Executive Order 12372, ''Intergovernmental Review of Federal Programs'' and 45 CFR Part 100, ''Intergovernmental Review of Department of Health and Human Services Programs and Activities.'' Under the Order, States may design their own processes for reviewing and commenting on proposed Federal assistance under covered programs. Note: State/territory participation in the intergovernmental review process does not signify applicant eligibility for financial assistance under a program. A potential applicant must meet the eligibility requirements of the program for which it is applying prior to submitting an application to its SPOC, if applicable, or to ACF.

The following States and Territories have elected to participate under the Executive Order process and have established a Single Point of Contact (SPOC): Arkansas, California, Delaware, District of Columbia, Florida, Georgia, Illinois, Iowa, Kentucky, Maine, Maryland, Michigan, Mississippi, Missouri, Nevada, New Hampshire, New Mexico, North Carolina, North Dakota, Rhode Island, South Carolina, Texas, Utah, West Virginia, Wisconsin, American Samoa, Guam. Puerto Rico, the Commonwealth of Northern Mariana Islands, and the United States Virgin Islands.

Jurisdictions not listed have elected not to participate in the Executive Order process. Applicants from these jurisdictions or for projects to be administered by Federally recognized Indian Tribes need take no action in regard to E.O. 12372.

Although the jurisdictions described above no longer participate in the process, entities which have met the eligibility requirements of the program are still eligible to apply for a grant even

if a State, territory, commonwealth, etc. does not have a SPOC. All remaining jurisdictions participate in the Executive Order process and have established SPOCs. Applicants from participating jurisdictions should contact their SPOCs as soon as possible to alert them of the prospective applications and receive instructions. Applicants must submit any required material to the SPOCs as soon as possible so that the program office can obtain and review SPOC comments as part of the award process. The applicant must submit all materials, if any, to the SPOC and indicate the date of this submittal (or the date of contact if no submittal is required) on the Standard Form 424, item 16a. Under 45 CFR 100.8(a), a SPOC has 60 days from the application deadline to comment on proposed new or competing continuation awards.

SPOCs are encouraged to eliminate the submission of routine endorsements as official recommendations. Additionally, SPOCs are requested to clearly differentiate between mere advisory comments and those Official State process recommendations which they intend to trigger the ''accommodate or explain'' rule under 45 CFR 100.10.

When comments are submitted directly to ACF, they should be addressed to: U.S. Department of Health and Human Services, Administration for Children and Families, Office of Grants Management, 4th Floor, Aerospace Center, 370 L'Enfant Promenade, SW., Washington, DC 20447.

A list of the Single Points of Contact for each State and Territory is included as Attachment H to this program announcement.

7. Application Consideration

Applications that meet the screening requirements in Sections 8.a. and 8.b. below will be reviewed competitively. Such applications will be referred to reviewers for a numerical score and explanatory comments based solely on responsiveness to program guidelines and evaluation criteria published in this announcement.

Qualified panelists not directly responsible for programmatic management of the grant will review applications. The results of these reviews will assist OCS in considering competing applications. Reviewers' scores will weigh heavily in funding decisions but will not be the only factors considered. Applications will be ranked and generally considered in order of the average scores assigned by reviewers. However, highly ranked applications are not guaranteed funding since other factors deemed relevant may be considered including, but not limited to, the timely and proper completion of projects funded with OCS funds granted in the past five years; comments of reviewers and government officials; staff evaluation and input; geographic distribution; previous program performance of applicants; compliance with grant terms under previous DHHS grants; audit reports; investigative reports; and applicant's progress in resolving any final audit disallowance on OCS or other Federal agency grants.

OCS reserves the right to discuss applications with other Federal or non-Federal funding sources to ascertain the applicant's performance record.

8. Criteria For Screening Applications

a. Initial Screening

All applicants will receive a written acknowledgment with an assigned identification number. This number, along with any other identifying codes, must be referenced in all subsequent communications concerning the application. If an acknowledgment is not received within three weeks after the deadline date, please notify ACF by telephone at (202) 401–5103.

All applications that meet the published deadline for submission will be screened to determine completeness and conformity to the requirements of this Announcement. Only those applications meeting the following requirements will be reviewed and evaluated competitively. Others will be returned to the applicants with a notation that they were unacceptable.

(1) The application must contain a Standard Form 424 ''Application for Federal Assistance'' (SF–424), a budget (SF–424A), and signed ''Assurances'' (SF–424B) completed according to instructions published in Part F and Attachments A, B, and C of this program announcement.

(2) A budget narrative, which corresponds to the object class categories in the SF 424A for the use of Federal funds, must be included in the application.

(3) The SF–424 and the SF–424B must be signed by an official of the applicant organization who has authority to obligate the organization legally.

(4) A project narrative must also accompany the standard forms.

b. Pre-Rating Review

Applications, which pass the initial screening, will be forwarded to reviewers and/or OCS staff to verify, prior to the programmatic review, that the applications comply with this program announcement in the following areas:

(1) *Eligibility:* Applicant meets the eligibility requirements found in Part B. Applicant also must be aware that the applicant's legal name as required on the SF 424 (item 5) *must match* that listed as corresponding to the Employer Identification Number (Item 6).

(2) *Duration of Project:* The application contains a project that can be successfully implemented in the project period.

(3) *Target Populations:* The application clearly targets the specific outcomes and benefits of the project to State staff administering CSBG funds, CAA State or regional associations, and/or local providers of CSBG-funded services and activities. Benefits to low-income consumers of CSBG services also must be identified.

(4) *Program Focus:* The application must address the purpose of the sub-priority area under which funding is being requested.

An application may be disqualified from the competition and returned to the applicant if it does not conform to one or more of the above requirements.

c. Evaluation Criteria

Applications that pass the pre-rating review will be assessed and scored by reviewers. Each reviewer will give a numerical score to each application reviewed. These numerical scores will be supported by explanatory statements on a formal rating form describing major strengths and weaknesses under each applicable criterion published in this announcement.

The in-depth evaluation and review process will use the following criteria coupled with the specific requirements contained in Part B.

Criteria for Review and Evaluation of Applications Submitted under this Program Announcement

(1) Criterion I: Need for Assistance (Maximum: 20 points)

(a) The application documents that the project addresses vital needs related to the purposes stated under the appropriate sub-priority area discussed in this program announcement (Part B) and provides statistics and other data and information in support of its contention. (0–10 points).

(b) The application provides current supporting documentation or other testimonies regarding needs from *State* CSBG Directors, *local* service providers and/or State and Regional organizations of local service providers. (0–10 points)

(2) Criterion II: Work Program (Maximum: 30 points)

The work program is results-oriented, appropriately related to the legislative

mandate and specifically related to the sub-priority area under which funds are being requested.

Applicant addresses the following: Specific outcomes to be achieved; performance targets that the project is committed to achieving, including reasons for not setting lower or higher target levels and how the project will verify the achievement of these targets; critical milestones which must be achieved if results are to be gained; organizational support, including priority this project has for the agency; past performance in similar work; and specific resources contributed to the project that are critical to success.

Applicant defines the comprehensive nature of the project and methods that will be used to ensure that the results can be used to address a statewide or nationwide project as defined by the priority area.

(3) Criterion III: Significant and Beneficial Impact: (Maximum: 15 points)

Applicant adequately describes how the project will assure long-term program and management improvements and have advantages over other products offered to achieve the same outcomes for State CSBG offices, CAA State and/or regional associations, and/or local providers of CSBG services and activities.

The applicant indicates the types and amounts of public and/or private resources it will mobilize, how those resources will directly benefit the project, and how the project will ultimately benefit low-income individuals and families.

If proposing a project with a training and technical assistance focus, applicant indicates the number of organizations and/or staff it will impact.

If proposing a project with a data collection focus, applicant provides a description of the mechanism it will use to collect data, how it can assure collections from a significant number of States, and the number of States willing to submit data to the applicant.

If proposing to develop a symposium series or other policy-related project(s), the applicant identifies the number and types of beneficiaries.

Methods of securing participant feedback and evaluations of activities are described in the application.

(4) Criterion IV: Evidence of Significant Collaborations (Maximum 10 Points)

Applicant describes how it will involve partners in the Community Services Network in its activities. Where appropriate, applicant describes how it will interface with other related organizations.

If subcontracts are proposed, documentation of the willingness and capacity for the subcontracting organization(s) to participate is described.

(5) Criterion V: Ability of Applicant to Perform (Maximum: 20 points)

(a) The applicant demonstrates that it has experience and a successful track record relevant to the specific activities and program area that it proposes to undertake.

If applicant is proposing to provide training and technical assistance, it details its competence in the specific program priority area and as a deliverer with expertise in the specific fields of training and technical assistance on a nationwide basis.

If applicable, information provided by the applicant also addresses related achievements and competence of each cooperating or sponsoring organization. (0–10 points)

(b) Applicant fully describes, for example in a resume, the experience and skills of the proposed project director and primary staff showing specific qualifications and professional experiences relevant to the successful implementation of the proposed project. (0–10 points)

(6) Criterion VI: Adequacy of Budget (Maximum: 5 points)

(a) The resources requested are reasonable and adequate to accomplish the project. (0–3 points)

(b) Total costs are reasonable and consistent with anticipated results. (0–2 points)

Part E—Contents of Application and Receipt Process

1. Contents of the Application

A cover letter containing an e-mail address and a facsimile (FAX) number, if available, should accompany the application. This will facilitate receipt of an acknowledgment from ACF that the application has been received. (See Part D., 8.a.)

Each application should include one original and two additional copies of the following:

a. A completed Standard Form 424 which has been signed by an official of the organization applying for the grant who has authority to obligate the organization legally. The applicant must be aware that, in signing and submitting the application for this award, it is certifying that it will comply with the Federal requirements concerning the drug-free workplace and debarment regulations set forth in Attachments D and E.

b. ''Budget Information-Non-Construction Programs'' (SF–424A). (Attachment B)

c. A completed, signed and dated ''Assurances—Non-Construction Programs'' (SF–424B). (Attachment C)

d. Drug-free Certification. (The applicant is certifying that it will comply with this requirement by signing and submitting the SF–424.) (Attachment D)

e. Debarment Certification. (Attachment E)

f. Certification Regarding Environmental Tobacco Smoke. (The applicant is certifying that it will comply with this requirement by signing and submitting the SF–424.) (Attachment F)

g. Disclosure of Lobbying Activities, SF–LLL. Complete, sign and date form, as appropriate. (Attachment G)

h. A Project Abstract of 500 words or less. The abstract should provide a succinct description of the need, project goals, and a summary of work plan and the proposed impact. Abstract will be maintained as part of the Grantee Administration Tracking System (GATES).

i. A Project Narrative consisting of the following elements preceded by a consecutively numbered table of contents that will describe the project in the following order:

(i) Need for Assistance

(ii) Work Program

(iii) Significant and Beneficial Impact

(iv) Evidence of Significant Collaborations

(v) Ability of Applicant to Perform

(vi) Appendices including proof of non-profit status, such as IRS determination of non-profit status, where applicable; relevant sections of by-laws, articles of incorporation, and/or statement from appropriate State CSBG office which confirms eligibility; resumes; Single Point of Contact comments, where applicable; and any partnership/collaboration agreements.

The original must bear the signature of the authorizing official representing the applicant organization.

The total number of pages for the entire application package should not exceed 35 pages, including appendices. Pages should be numbered sequentially throughout.

If appendices include photocopied materials, they must be legible.

Applications should be two-hole punched at the top center and fastened separately with a compressor slide paper fastener or a binder clip. The submission of bound applications or

applications enclosed in a binder are specifically discouraged.

Applications must be submitted on white 8½ x 11-inch paper only since OCS may find it necessary to duplicate them for review purposes. They must not include colored, oversized or folded materials; organizational brochures or other promotional materials; slides; films; clips; etc. They will be discarded if included.

Part F—Instructions for Completing Application Package

(Approved by the OMB under Control Number 0970–0062)

The standard forms attached to this program announcement shall be used when submitting applications for all funds under this announcement.

It is recommended that the applicant reproduce the SF–424, (Attachment A), SF–424A (Attachment B), SF–424B (Attachment C) and that the application be typed on the copies. If an item on the SF–424 cannot be answered or does not appear to be related or relevant to the assistance requested, the applicant should write ''NA'' for ''Not applicable.''

The application should be prepared in accordance with the standard instructions in Attachments A and B corresponding to the forms, as well as the specific instructions set forth below:

SF–424 ''Application for Federal Assistance'' Item

Item

1. For the purposes of this program announcement, all projects are considered ''Applications''; there are no ''Pre-Applications.''

5. and 6. The legal name of the applicant must match that listed as corresponding to the Employer Identification Number. Where the applicant is a previous Department of Health and Human Services grantee, enter the Central Registry System Employee Identification Number (CRS/EIN) and the Payment Identifying Number, if one has been assigned, in the Block entitled ''Federal Identifier'' located at the top right hand corner of the form.

7. If the applicant is a non-profit corporation, enter ''N'' in the box and specify ''non-profit corporation'' in the space marked ''Other.'' Proof of non-profit status such as IRS determination, articles of incorporation, or by-laws, must be included as an appendix to the project narrative.

8. For the purposes of this announcement, all applications are ''New.''

9. Enter ''DHHS–ACF/OCS.''

10. The Catalog of Federal Domestic Assistance number for the OCS program covered under this announcement is ''93.570.''

The title is ''Office of Community Services'' Discretionary CSBG Awards—Fiscal Year 2002 Spring Training, Technical Assistance, and Capacity-Building Programs.''

15a. For purposes of this announcement, this amount should reflect the amount requested for the entire project period.

15b–e. These items should reflect both cash and third party in-kind contributions for the total project period.

2. SF–424A—''Budget Information-Non-Construction Programs''

See instructions accompanying the form as well as the instructions set forth below:

In completing these sections, the Federal budget entries will relate to the requested OCS Training and Technical Assistance Program funds only, and Non-Federal will include mobilized funds from all other sources—applicant, State, and other. Federal funds, other than those requested from the Training and Technical Assistance Program should be included in Non-Federal entries.

Sections A and D must contain entries for both Federal (OCS) and non-Federal (mobilized).

Section A—Budget Summary

Col. (a): Line 1—Enter ''OCS Training and Technical Assistance Program''; Col.

(b): Line 1—Enter ''93.570''.

Col. (c) and (d): Not Applicable

Col. (e)–(g): For lines 1 enter in column (e), (f) and (g) the appropriate amounts needed to support the project for the entire project period.

Line 5—Enter the figures from Line 1 for all columns completed under (e), (f), and (g).

Section B—Budget Categories

This section should contain entries for OCS funds only. For all projects, the first budget period of 12 months will be entered in Column #1. Allowability of costs is governed by applicable cost principles set forth in 45 CFR Parts 74 and 92.

A separate itemized budget justification should be included to explain fully and justify major items, as indicated below. The budget justification should immediately follow the Table of Contents.

Column 5: Enter total requirements for Federal funds by the Object Class Categories of this section.

Line 6a—Personnel: Enter the total costs of salaries and wages.

Justification: Identify the project director. Specify by title or name the percentage of time allocated to the project, the individual annual salaries and the cost to the project (both Federal and Non-Federal) of the organization's staff who will be working on the project.

Line 6b—Fringe Benefits: Enter the total costs of fringe benefits, unless treated as part of an approved indirect cost rate which is entered on line 6j.

Justification: Enter the total costs of fringe benefits, unless treated as part of an approved indirect cost rate.

Line 6c—Travel: Enter total cost of all travel by employees of the project. Do not enter costs for consultant's travel.

Justification: Include the name(s) of traveler(s), total number of trips, destinations, length of stay, mileage rate, transportation costs and subsistence allowances.

Line 6d–Equipment: Enter the total costs of all non-expendable personal property to be acquired by the project. Equipment means tangible non-expendable personal property having a useful life of more than one year and an acquisition cost of $5,000 or more per unit.

Justification: Equipment to be purchased with Federal funds must be required to conduct the project, and the applicant organization or its subgrantees must not already have the equipment or a reasonable facsimile available to the project. The justification also must contain plans for future use or disposal of the equipment after the project ends.

Line 6e—Supplies: Enter the total costs of all tangible personal property (surplus) other than that included on line 6d.

Line 6h—Other: Enter the total of all other costs. Such costs, where applicable, may include, but are not limited to, insurance, food, medical and dental costs (noncontractual), fees and travel paid directly to individual consultants, local transportation (all travel which does not require per diem is considered local travel), space and equipment rentals, printing and publication, computer use training costs including tuition and stipends, training service costs including wage payments to individuals and supportive service payments, and staff development costs.

Line 6j—Indirect Charges: Enter the total amount of indirect costs. This line should be used only when the applicant currently has an indirect cost rate approved by the U.S. Department of Health and Human Services or other Federal agencies. With the exception of States and local governments, applicants should enclose a copy of the

current approved rate agreement if it was negotiated with a Federal agency other than the U.S. Department of Health and Human Services. For an educational institution, the indirect costs on training grants will be allowed at the lesser of the institution's actual indirect costs or 8 percent of the total direct costs.

If the applicant organization is in the process of initially developing or renegotiating a rate, it should immediately, upon notification that an award will be made, develop a tentative indirect cost rate proposal based on its most recently completed fiscal year in accordance with the principles set forth in the pertinent DHHS Guide for Establishing Indirect Cost Rates, and submit it to the appropriate DHHS Regional Office.

It should be noted that when an indirect cost rate is requested, those costs included in the indirect cost pool cannot be budgeted or charged as direct costs to the grant.

Line 6k—Totals: The total amount shown in Section B, Column (5), should be the same as the amount shown in Section A, line 5, column (e).

Line 7—Program Income: Enter the estimated amount of income, if any is expected to be generated from this project. Separately show expected program income generated from OCS support and income generated from other mobilized funds. Do not add or subtract this amount from the budget total. Show the nature and source of income in the program narrative statement.

Column 5: Carry totals from column 1 to column 5 for all line items.

Justification: Describe the nature, source and anticipated use of program income in the Program Narrative Statement.

Section C—Non-Federal Resources

This section is to record the amounts of Non-Federal resources that will be used to support the project. Non-Federal resources refer to other than OCS funds for which the applicant has received a commitment. Provide a brief explanation, on a separate sheet, showing the type of contribution, broken out by Object Class Categories, section B.6) and whether it is cash or third party in-kind. The firm commitment of these required funds must be documented and submitted with the application.

Except in unusual situations, this documentation must be in the form of letters of commitment or letters of intent from the organization(s)/individuals from which funds will be received.

Line 8—Col. (a): Enter the project title.

Col. (b): Enter the amount of cash or donations to be made by the applicant.

Col. (c): Enter the State contribution.

Col. (d): Enter the amount of cash and third party in-kind contributions to be made from all other sources.

Col. (e): Enter the total of column (b), (c), and (d). Lines 9, 10, and 11 should be left blank.

Line 12—Carry the total of each column of line 8, (b) through (e). The amount in column (e) should be equal to the amount on section A, Line 5, and column (f).

Justification: Describe third party in-kind contributions, if included.

Section D—Forecasted Cash Needs

Line 13—Enter the amount of Federal (OCS) cash needed for this grant for first year and by quarter, during the first 12-month budget period.

Line 14—Enter the amount of cash from all other sources needed by quarter during the first year.

Line 15—Enter the total of Lines 13 and 14 for all columns.

Section E—Budget Estimates of Federal Funds Needed For Balance of the Project

To be completed by applicants applying for funds for a three year project period.

Section F—Other Budget Information

Line 21—Include narrative justification required under Section B for each object class category for the total project period.

Line 22—Enter the type of HHS or other Federal agency approved indirect cost rate (provisional, predetermined, final or fixed) that will be in effect during the funding period, the estimated amount of the base to which the rate is applied and the total indirect expense. Also, enter the date the rate was approved, where applicable. Attach a copy of the approved rate agreement if it was negotiated with a Federal agency other than the U.S. Department of Health and Human Services. If the applicant decides not apply an indirect cost rate to the proposal, then ''this line should be left blank.''

Line 23—Provide any other explanations and continuation sheets required or deemed necessary to justify or explain the budget information.

3. SF–424B ''Assurances Non-Construction''

Applicant must sign and return the ''Assurances'' found at Attachment C with its application.

4. Project Narrative

Each narrative section of the application must address one or more of the focus areas described in Part B and follow the format outlined below:

(a) Need for Assistance
(b) Work Program
(c) Significant and Beneficial Impact
(d) Evidence of Significant Collaborations
(e) Ability of the Applicant to Perform
(f) Adequacy of the Budget

Part G—Post Award Information and Reporting Requirements

Following approval of the applications selected for funding, notice of project approval and authority to draw down project funds will be made in writing. The official award document is the Financial Assistance Award, which indicates, the amount of Federal funds approved for use in the project, the project and budget periods for which support is provided, the terms and conditions of the award, and the total project period for which support is contemplated.

In addition to the standard terms and conditions which will be applicable to grants, grantee will be subject to the provisions of 45 CFR parts 74 (non-governmental) and 92 (governmental) and OMB Circulars A–122 (nonprofit) and A–87 (governmental).

Grantees will be required to submit semi-annual program progress narrative and financial reports (SF–269) as well as a final program progress narrative report and a final financial report.

Grantees are subject to the audit requirements in 45 CFR parts 74 (non-governmental) and 92 (governmental) and OMB Circular A–133.

Section 319 of Public Law 101–121, signed into law on October 23, 1989 imposes prohibitions and requirements for disclosure and certification related to lobbying on recipients of Federal contracts, grants, cooperative agreements, and loans. It provides exemptions for Indian tribes and tribal organizations. Current and prospective recipients (and their sub-tier contractors and/or grantees) are prohibited from using Federal funds, other than profits from a Federal contract, for lobbying Congress or any Federal agency in connection with the award of a contract, grant, cooperative agreement, or loan. In addition, for each award action in excess of $100,000 (or $150,000 for loans) the law requires recipients and their subtier contractors and/or subgrantees (1) to certify that they have neither used nor will use any appropriated funds for payment to lobbyists, (2) to disclose the name, address, payment details, and purpose of any agreements with lobbyists whom recipients or their subtier Contractors or subgrantee will pay with profits or *non-*

appropriated funds on or after December 22, 1989, and (3) to file quarterly up-dates about the use of lobbyists if material changes occur in their use. The law establishes civil penalties for noncompliance. See Attachment F for certification and disclosure forms to be submitted with the applications for this program.

Public Law 103–227, Part C. Environmental Tobacco Smoke, also known as the Pro-Children Act of 1994 (Act), requires that smoking not be permitted in any portion of any indoor facility owned or leased or contracted for by an entity and used routinely or regularly for the provision of health, day care, education, or library services to children under the age of 18, if the services are funded by Federal programs either directly or through States or local governmental by Federal grant, contract, loan or loan guarantee. The law does not apply to facilities funded solely by Medicare or Medicaid funds, and portions of facilities used for in-patient drug or alcohol treatment. Failure to comply with the provisions of the law may result in the imposition of a civil monetary penalty of up to $1,000 per day and/or the imposition of an administrative compliance order on the responsible entity.

By signing and submitting this application, the applicant/grantee certifies that it will comply with the requirement of the Act. The applicant/grantee further agrees that it will require the language of this certification be included in any sub-awards, which contain provisions for children's services and that all subgrantees shall certify accordingly.

Attachment H indicates the regulations that apply to all applicants/grantees under this program.

Dated: June 27, 2002.

Clarence H. Carter,

Director, Office of Community Services.

List of Attachments

A—Application For Federal Assistance, SF 424

B—Budget Information—Non-Construction Programs, SF 424A

C—Assurances—Non-Construction Programs, SF 424B

D—Certification Regarding Drug-Free Work Place

E—Debarment Certification

F—Certification Regarding Environmental Tobacco Smoke

G—Disclosure of Lobbying Activities, SF–LLL

H—Listing of State Single Points of Contact

BILLING CODE 4184–01–P

Attachment A, Page 1

OMB Approval No. 0348-0043

APPLICATION FOR FEDERAL ASSISTANCE

2. DATE SUBMITTED	Applicant Identifier	
3. DATE RECEIVED BY STATE	State Application Identifier	
4. DATE RECEIVED BY FEDERAL AGENCY	Federal Identifier	

1. TYPE OF SUBMISSION:

Application: ☐ Construction ☐ Non-Construction

Preapplication: ☐ Construction ☐ Non-Construction

5. APPLICANT INFORMATION

Legal Name:

Organizational Unit:

Address *(give city, county, State, and zip code)*:

Name and telephone number of person to be contacted on matters involving this application *(give area code)*

6. EMPLOYER IDENTIFICATION NUMBER *(EIN)*:

☐☐ – ☐☐☐☐☐☐☐

7. TYPE OF APPLICANT: *(enter appropriate letter in box)* ☐

A. State
B. County
C. Municipal
D. Township
E. Interstate
F. Intermunicipal
G. Special District
H. Independent School Dist.
I. State Controlled Institution of Higher Learning
J. Private University
K. Indian Tribe
L. Individual
M. Profit Organization
N. Other (Specify) _____

8. TYPE OF APPLICATION:

☐ New ☐ Continuation ☐ Revision

If Revision, enter appropriate letter(s) in box(es) ☐ ☐

A. Increase Award B. Decrease Award C. Increase Duration
D. Decrease Duration Other*(specify)*:

_____

9. NAME OF FEDERAL AGENCY:

10. CATALOG OF FEDERAL DOMESTIC ASSISTANCE NUMBER:

☐☐ – ☐☐☐

TITLE:

11. DESCRIPTIVE TITLE OF APPLICANT'S PROJECT:

12. AREAS AFFECTED BY PROJECT *(Cities, Counties, States, etc.)*:

13. PROPOSED PROJECT

Start Date	Ending Date

14. CONGRESSIONAL DISTRICTS OF:

a. Applicant

b. Project

15. ESTIMATED FUNDING:

a. Federal	$ .00
b. Applicant	$ .00
c. State	$ .00
d. Local	$ .00
e. Other	$ .00
f. Program Income	$ .00
g. TOTAL	$ .00

16. IS APPLICATION SUBJECT TO REVIEW BY STATE EXECUTIVE ORDER 12372 PROCESS?

a. YES. THIS PREAPPLICATION/APPLICATION WAS MADE AVAILABLE TO THE STATE EXECUTIVE ORDER 12372 PROCESS FOR REVIEW ON:

DATE _____

b. No. ☐ PROGRAM IS NOT COVERED BY E. O. 12372
☐ OR PROGRAM HAS NOT BEEN SELECTED BY STATE FOR REVIEW

17. IS THE APPLICANT DELINQUENT ON ANY FEDERAL DEBT?

☐ Yes If "Yes," attach an explanation. ☐ No

18. TO THE BEST OF MY KNOWLEDGE AND BELIEF, ALL DATA IN THIS APPLICATION/PREAPPLICATION ARE TRUE AND CORRECT, THE DOCUMENT HAS BEEN DULY AUTHORIZED BY THE GOVERNING BODY OF THE APPLICANT AND THE APPLICANT WILL COMPLY WITH THE ATTACHED ASSURANCES IF THE ASSISTANCE IS AWARDED.

a. Type Name of Authorized Representative	b. Title	c. Telephone Number
d. Signature of Authorized Representative		e. Date Signed

Previous Edition Usable
Authorized for Local Reproduction

Standard Form 424 (Rev. 7-97)
Prescribed by OMB Circular A-102

BILLING CODE 4184–01–C

Attachment A, Page 2

Public reporting burden for this collection of information is estimated to average 45 minutes per response, including time for reviewing instructions, searching existing data sources, gathering and maintaining the

data needed, and completing and reviewing the collection of information. Send comments regarding the burden estimate or any other aspect of this collection of information, including suggestions for reducing this burden, to the Office of Management and Budget, Paperwork Reduction Project (0348–0043), Washington, DC 20503.

Please do not return your completed form to the Office of Management and Budget. Send it to the address provided by the sponsoring agency.

This is a standard form used by applicants as a required facesheet for preapplications and applications submitted for Federal assistance. It will be used by Federal agencies to obtain applicant certification that States which have established a review and comment procedure in response to Executive Order 12372 and have selected the program to be included in their process, have been given an opportunity to review the applicant's submission.

Item and Entry

1. Self-explanatory.

2. Date application submitted to Federal agency (or State if applicable) and applicant's control number (if applicable).

3. State use only (if applicable).

4. If this application is to continue or revise an existing award, enter present Federal identifier number. If for a new project, leave blank.

5. Legal name of applicant, name of primary organizational unit which will undertake the assistance activity, complete address of the applicant, and name and telephone number of the person to contact on matters related to this application.

6. Enter Employer Identification Number (EIN) as assigned by the Internal Review Service.

7. Enter the appropriate letter in the space provided.

8. Check appropriate box and enter appropriate letter(s) in the space(s) provided:

—''New'' means a new assistance award.

—''Continuation'' means an extension for an additional funding/budget period for a project with a projected completion date.

—''Revision'' means any change in the Federal Government's financial obligation or contingent liability form an existing obligation.

9. Name of Federal agency from which assistance is being requested with this application.

10. Use the Catalog of Federal Domestic Assistance number and title of the programs under which assistance is requested.

11. Enter a brief descriptive title of the project. If more than one program is involved, you should append an explanation on a separate sheet. If appropriate (e.g., construction or real property projects), attach a map showing project location. For preapplications, use a separate sheet to provide a summary description of this project.

12. List only the largest political entities affected (e.g., State, counties, cities).

13. Self-explanatory.

14. List the applicant's Congressional District and any District(s) affected by the program or project.

15. Amount requested or to be contributed during the first funding/budget period by each contributor. Value of in-kind contributions should be included on appropriate lines as applicable. If the action will result in a dollar change to an existing award, indicate the amount of the change. For decreases, enclose the amounts in parentheses. If both basic and supplemental amounts are included, show breakdown on an attached sheet. For multiple program funding, use totals and show breakdown using same categories as item 15.

16. Applicants should contact the State Single Point of Contact (SPOC) for Federal Executive Order 12372 to determine whether the application is subject to the State intergovernmental review process.

17. This question applies to the applicant organization, not the person who signs as the authorized representative. Categories of debt include delinquent audit disallowances, loans and taxes.

18. To be signed by the authorized representative of the applicant. A copy of the governing body's authorization for you to sign this application as official representative must be on file in the applicant's office (Certain Federal agencies may require that this authorization be submitted as part of the application.)

BILLING CODE 4184–01–P

Attachment B, Page 1

BUDGET INFORMATION - Non-Construction Programs

OMB Approval No. 0348-0044

SECTION A - BUDGET SUMMARY

Grant Program Function or Activity (a)	Catalog of Federal Domestic Assistance Number (b)	Estimated Unobligated Funds		New or Revised Budget		
		Federal (c)	Non-Federal (d)	Federal (e)	Non-Federal (f)	Total (g)
1.		$	$	$	$	$
2.						
3.						
4.						
5. Totals		$	$	$	$	$

SECTION B - BUDGET CATEGORIES

6. Object Class Categories	GRANT PROGRAM, FUNCTION OR ACTIVITY				Total
	(1)	(2)	(3)	(4)	(5)
a. Personnel	$	$	$	$	$
b. Fringe Benefits					
c. Travel					
d. Equipment					
e. Supplies					
f. Contractual					
g. Construction					
h. Other					
i. Total Direct Charges *(sum of 6a-6h)*					
j. Indirect Charges					
k. TOTALS *(sum of 6i and 6j)*	$	$	$	$	$
7. Program Income	$	$	$	$	$

Authorized for Local Reproduction

Previous Edition Usable

Standard Form 424A (Rev. 7-97)
Prescribed by OMB Circular A-10

Attachment B, Page 2

SECTION C - NON-FEDERAL RESOURCES

(a) Grant Program	(b) Applicant	(c) State	(d) Other Sources	(e) TOTALS
8.	$	$	$	$
9.				
10.				
11.				
12. TOTAL *(sum of lines 8-11)*	$	$	$	$

SECTION D - FORECASTED CASH NEEDS

	Total for 1st Year	1st Quarter	2nd Quarter	3rd Quarter	4th Quarter
13. Federal	$	$	$	$	$
14. Non-Federal					
15. TOTAL *(sum of lines 13 and 14)*	$	$	$	$	$

SECTION E - BUDGET ESTIMATES OF FEDERAL FUNDS NEEDED FOR BALANCE OF THE PROJECT

(a) Grant Program	FUTURE FUNDING PERIODS (Years)			
	(b) First	(c) Second	(d) Third	(e) Fourth
16.	$	$	$	$
17.				
18.				
19.				
20. TOTAL *(sum of lines 16-19)*	$	$	$	$

SECTION F - OTHER BUDGET INFORMATION

21. Direct Charges:	22. Indirect Charges:
23. Remarks:	

Authorized for Local Reproduction

Standard Form 424A (Rev. 7-97) Page

BILLING CODE 4184–01–C

Instructions for the SF–424A

Public reporting burden for this collection of information is estimated to average 180 minutes per response, including time for reviewing instructions, searching existing data sources, gathering and maintaining the data needed, and completing and reviewing the collection of information. Send comments regarding the burden estimate or any other aspect of this collection of information, including suggestions for reducing this burden, to the Office of Management and Budget, Paperwork Reduction Project (0348–0044), Washington, DC 20503.

Please do not return your completed form to the Office of Management and Budget. Send to the address provided by the sponsoring agency.

General Instructions

This form is designed so that application can be made for funds from one or more grant programs. In preparing the budget, adhere to any existing Federal grantor agency guidelines which prescribe now and whether budgeted amounts should be separately shown for different functions or activities within the program. For some programs, grantor agencies may require budgets to be separately shown by function or activity. For other programs, grantor agencies may require a breakdown by function or activity. Sections A, B, C, and D should include budget estimates for the whole project except when applying for assistance which requires Federal authorization in annual or other funding period increments. In the latter case, Sections A, B, C, and D should provide the budget for the first budget period (usually a year) and Section E should present the need for Federal assistance in the subsequent budget periods. All applications should contain a breakdown by the object class categories shown in Lines a–k of section B.

Section A. Budget Summary Lines 1–4 Columns (a) and (b)

For applications pertaining to a single Federal grant program (Federal Domestic Assistance Catalog number) and not requiring a functional or activity breakdown, enter on Line 1 under Column (a) the Catalog program title and the Catalog number in Column (b).

For applications pertaining to a single program requiring budget amounts by multiple functions or activities, enter the name of each activity or function on each line in Column (a), and enter the Catalog number in Column (b). For applications pertaining to multiple programs where none of the programs require a breakdown by function or activity, enter the Catalog program title on each line in Column (a) and the respective Catalog number on each line in Column (b).

For applications pertaining to multiple programs where one or more programs require a breakdown by function or activity, prepare a separate sheet for each program requiring the breakdown. Additional sheets should be used when one form does not provide adequate space for all breakdown of data required. However, when more than one sheet is used, the first page should provide the summary totals by programs.

Lines 1–4, Columns (c) through (g)

For new applications, leave Column (c) and (d) blank. For each line entry in Columns (a) and (b), enter in Columns (e), (f), and (g) the appropriate amounts of funds needed to support the project for the first funding period usually a year).

For continuing grant program applications, submit these forms before the end of each funding period as required by the grantor agency. Enter in Columns (c) and (d) the estimated amounts of funds which will remain unobligated at the end of the grant funding period only if the Federal grantor agency instructions provide for this. Otherwise, leave these columns blank. Enter in columns (e) and (f) the amounts of funds needed for the upcoming period. The amounts(s) in Column (g) should be the sum of amounts in Columns (e) and (f).

For supplemental grants and changes to existing grants, do not use Columns (c) and (d). Enter in Column (e) the amount of the increase or decrease of Federal funds and enter in Column (f) the amount of the increase or decrease of non-Federal funds. In Column (g) enter the new total budgeted amount (Federal and non-Federal) which includes the total previous authorized budgeted amounts plus or minus, as appropriate, the amounts shown in Columns (e) and (f). The amount(s) in Column (g) should not equal the sum of amounts in Columns (e) and (f).

Line 5—Show the total for all columns used.

Section B. Budget Categories

In the column headings (1) through (4), enter the titles of the same programs, functions, and activities shown on Lines 1–4, Column (a), Section A. When additional sheets are prepared for Section A, provide similar column headings on each sheet. For each program, function or activity, fill in the total requirements for funds (both Federal and non-Federal) by object class categories.

Line 6a-j—Show the totals of Lines 6a to 6h in each column.

Line 6j—Show the amount of indirect cost.

Line 6k—Enter the total amounts on lines 6i and 6j. For all applications for new grants and continuation grants the total amount in column (5), Line 6k, should be the same as the total amount shown in Section A, Column (g), Line 5. For supplemental grants and changes to grants, the total amount of the increase or decrease as shown in Columns (1)–(4), Line 6k should be the same as the sum of the amounts in Section A, Columns (e) and (f) on Line 5.

Line 7—Enter the estimated amount of income, if any, expected to be generated from this project. Do not add or subtract this amount from the total project amount. Show under the program narrative statement the nature and source of income. The estimated amount of program income may be considered by the Federal grantor agency in determining the total amount of the grant.

Section C. Non-Federal Resources

Lines 8–11—Enter amounts of non-Federal resources that will be used on the grant. If in-kind contributions are included, provide a brief explanation on a separate sheet.

Column (a)—Enter the program titles identical to Column (a), Section A. A breakdown by function or activity is not necessary.

Column (b)—Enter the contribution to be made by the applicant.

Column (c)—Enter the amount of the State's cash and in-kind contribution if the applicant is not a State or State agency. Applicants which are a State or State agencies should leave this column blank.

Column (d)—Enter the amount of cash and in-kind contributions to be made from all other sources.

Column (e)—Enter total of Columns (b), (c), and (d).

Line 12—Enter the total for each of Columns (b)-(e). The amount in Column (e) should be equal to the amount on Line 5, Column (f), Section A.

Section D. Forecasted Cash Needs

Line 13—Enter the amount of cash needed by quarter from the grantor agency during the first year.

Line 14—Enter the amount of cash from all other sources needed by quarter during the first year.

Line 15—Enter the totals of amounts on Lines 13 and 14.

Section E. Budget Estimates of Federal Funds Needed for Balance of the Project

Lines 16–19—Enter in Column (a) the same grant program titles shown in Column (a), Section A. A breakdown by function or activity is not necessary. For new applications and continuation grant applications, enter in the proper columns amounts of Federal funds which will be needed to complete the program or project over the succeeding funding periods (usually in years). This section need not be completed for revisions (amendments, changes, or supplements) to funds for the current year of existing grants.

If more than four lines are needed to list the program titles, submit additional schedules as necessary.

Line 20—Enter the total for each of the Columns (b)–(3). When additional schedules are prepared for this Section, annotate accordingly and show the overall totals on this line.

Section F. Other Budget Information

Line 21—Use this space to explain amounts for individual direct object class cost categories that may appear to be out of the ordinary or to explain the details as required by the Federal grantor agency

Line 22—Enter the type of indirect rate (provisions, predetermined, final or fixed) that will be in effect during the funding period, the estimated amount of the base to which the rate is applied, and the total indirect expense.

Line 23—Provide any other explanations or comments deemed necessary.

Attachment C

OMB Approval No. 0348–0040

Assurances—Non-Construction Programs

Public reporting burden for this collection of information is estimated to average 15 minutes per response, including time for reviewing instructions, searching existing data sources, gathering and maintaining the data needed, and completing and reviewing the collection of information. Send comments regarding the burden estimate or any other aspect of this collection of information, including suggestions for reducing this burden, to the Office of Management and Budget, Paperwork Reduction Project (0349–0040), Washington, DC 20503.

Please do not return your completed form to the Office of Management and Budget. Send it to the address provided by the sponsoring agency.

Note: Certain of these assurances may not be applicable to your project or program. If you have questions, please contact the awarding agency. Further, certain Federal awarding agencies may require applicants to certify to additional assurances. If such is the case, you will be notified.

As the duly authorized representative of the applicant, I certify that the applicant:

1. Has the legal authority to apply for Federal assistance and the institutional, managerial and financial capability (including funds sufficient to pay the non-Federal share of project cost) to ensure proper planning, management and completion of the project described in this application.

2. Will give the awarding agency, the Comptroller General of the United States and, if appropriate, the State, through any authorized representative, access to and the right to examine all records, books, papers, or documents related to the award; and will establish a proper accounting system in accordance with generally accepted accounting standards or agency directives.

3. Will establish safeguards to prohibit employees from using their positions for a purpose that constitutes or presents the appearance of personal or organizational conflict interest, or personal gain.

4. Will initiate and complete the work within the applicable time frame after receipt of approval of the awarding agency.

5. Will comply with the Intergovernmental Personnel Act of 1970 (42 U.S.C. §§ 4728–4763) relating to prescribed standards for merit systems for programs funded under one of the 19 statutes or regulations specified in Appendix A of OPM's Standards for a Merit System of Personnel Administration (5 CFR 900, Subpart F).

6. Will comply with all Federal statutes relating to nondiscrimination. These include but are not limited to: (a) Title VI of the Civil Rights Act of 1964 (P.L. 88–352) which prohibits discrimination on the basis of race, color, or national origin; (b) Title IX of the Education Amendments of 1972, as amended (20 U.S.C. §§ 1681–1683, and 1685–1686), which prohibits discrimination on the basis of sex; (c) Section 504 of the Rehabilitation Act of 1973, as amended (29 U.S.C. § 794), which prohibits discrimination on the basis of handicaps; (d) the Age Discrimination Act of 1975, as amended (42 U.S.C. §§ 6101–6107), which prohibits discrimination on the basis of age; (e) the Drug Abuse Office and Treatment Act of 1972 (P.L. 92–255), as amended, relating to nondiscrimination on the basis of drug abuse; (f) the Comprehensive Alcohol Abuse and Alcoholism Prevention, Treatment and Rehabilitation Act of 1970 (P.L. 91–616), as amended, relating to nondiscrimination on the basis of alcohol abuse or alcoholism; (g) §§ 523 and 527 of the Public Health Service Act of 1912 (42 U.S.C. §§ 290 dd–3 and 290 ee–3), as amended, relating to confidentiality of alcohol and drug abuse patient records; (h) Title VII of the Civil Rights Act of 1968 (42 U.S.C. §§ 3601 et seq.), as amended, relating to nondiscrimination in the sale, rental or financing of housing; (i) any other nondiscrimination provisions in the specific statute(s) under which application for Federal assistance is being made; and, (j) the requirements of any other nondiscrimination statute(s) which may apply to the application.

7. Will comply, or has already complied, with the requirements of Titles II and III of the Uniform Relocation Assistance and Real Property Acquisition Policies Act of 1970 (P.L. 91–646) which provide for fair and equitable treatment of persons displaced or whose property is acquired as a result of Federal or federally-assisted programs. These requirements apply to all interests in real property acquired for project purposes regardless of Federal participation in purchases.

8. Will comply, as applicable, with provisions of the Hatch Act (5 U.S.C. §§ 1501–1508 and 7324–7328) which limit the political activities of employees whose principal employment activities are funded in whole or in part with Federal funds.

9. Will comply, as applicable, with the provisions of the Davis-Bacon Act (40 U.S.C. §§ 276a to 276a–7), the Copeland Act (40 U.S.C. § 276c and 18 U.S.C. § 874), and the Contract Work Hours and Safety Standards Act (40 U.S.C. §§ 327–333), regarding labor standards for federally-assisted construction subagreements.

10. Will comply, if applicable, with flood insurance purchase requirements of Section 102(a) of the Flood Disaster Protection Act of 1973 (P.L. 93–234) which requires recipients in a special flood hazard area to participate in the program and to purchase flood insurance if the total cost of insurable construction and acquisition is $10,000 or more.

11. Will comply with environmental standards which may be prescribed pursuant to the following: (a) Institution of environmental quality control measure under the National Environmental Policy Act of 1969 (P.L. 91–190) and Executive Order (EO) 11514: (b) notification of violating facilities pursuant to EO 11738; (c) protection of wetlands pursuant to EO 11990; (d) evaluation of flood hazards in floodplains in accordance with EO 11988; (e) assurance of project consistency with the approved State management program developed under the Coastal Zone Management Act of 1972 (16 U.S.C. §§ 1451 et seq.); (f) conformity of Federal actions to State (Clean Air) Implementation Plans under Section 176(c) of the Clean Air Act of 1955, as amended (42 U.S.C. §§ 7401 et seq.); (g) protection of underground sources of drinking water under the Safe Drinking Water Act of 1974, as amended (P.L. 93–523); and, (h) protection of endangered species under the Endangered Species Act of 1973, as amended (P.L. 93–205).

12. Will comply with the Wild and Scenic Rivers Act of 1968 (16 U.S.C. §§ 1271 et seq.) related to protecting components or potential components of the national wild and scenic rivers system.

13. Will assist the awarding agency in assuring compliance with section 106 of the National Historic Preservation act of 1966, as amended (16 U.S.C. § 470), EO 11593 (identification and protection of historic properties), and the Archaeological and Historic Preservation Act of 1974 (16 U.S.C. §§ 469a–1 et seq.).

14. Will comply with P.L. 93–348 regarding the protection of human subjects involved in research, development, and related activities supported by this award of assistance.

15. Will comply with the Laboratory Animal Welfare Act of 1966 (P.L. 89–544, as amended, 7 U.S.C. §§ 2131 et seq.) pertaining to the care, handling, and treatment of warm blooded animals held for research, teaching, or other activities supported by this award of assistance.

16. Will comply with the Lead-Based Paint Poisoning Prevention Act (42 U.S.C. §§ 4801 et seq.) which prohibits the use of lead-based paint in construction or rehabilitation of residence structures.

17. Will cause to be performed the required financial and compliance audits in accordance with the Single Audit Act Amendments of 1996 and OMB Circular No. A–133, ''Audits of States, Local Governments, and Non-Profit Organizations.''

18. Will comply with all applicable requirements of all other Federal laws, executive orders, regulations, and policies governing this program.

Signature of Authorized Certifying Official

Title

Applicant Organization

Date submitted

Certification Regarding Drug-Free Workplace Requirements

This certification is required by the regulations implementing the Drug-Free Workplace Act of 1988: 45 CFR Part 76, Subpart, F. Sections 76.630(c) and (d)(2) and 76.645(a)(1) and (b) provide that a Federal agency may designate a central receipt point for STATE–WIDE AND STATE AGENCY–WIDE certifications, and for notification of criminal drug convictions. For the Department of Health and Human Services, the central pint is: Division of Grants Management and Oversight, Office of Management and Acquisition, Department of Health and Human Services, Room 517–D,

200 Independence Avenue, SW Washington, DC 20201.

Certification Regarding Drug-Free Workplace Requirements (Instructions for Certification)

1. By signing and/or submitting this application or grant agreement, the grantee is providing the certification set out below.

2. The certification set out below is a material representation of fact upon which reliance is placed when the agency awards the grant. If it is later determined that the grantee knowingly rendered a false certification, or otherwise violates the requirements of the Drug-Free Workplace Act, the agency, in addition to any other remedies available to the Federal Government, may take action authorized under the Drug-Free Workplace Act.

3. For grantees other than individuals, Alternate I applies.

4. For grantees who are individuals, Alternate II applies.

5. Workplaces under grants, for grantees other than individuals, need not be identified on the certification. If known, they may be identified in the grant application. If the grantee does not identify the workplaces at the time of application, or upon award, if there is no application, the grantee must keep the identity of the workplace(s) on file in its office and make the information available for Federal inspection. Failure to identify all known workplaces constitutes a violation of the grantee's drug-free workplace requirements.

6. Workplace identifications must include the actual address of buildings (or parts of buildings) or other sites where work under the grant takes place. Categorical descriptions may be used (e.g., all vehicles of a mass transit authority or State highway department while in operation, State employees in each local unemployment office, performers in concert halls or radio studios).

7. If the workplace identified to the agency changes during the performance of the grant, the grantee shall inform the agency of the change(s), if it previously identified the workplaces in question (see paragraph five).

8. Definitions of terms in the Nonprocurement Suspension and Debarment common rule and Drug-Free Workplace common rule apply to this certification. Grantees' attention is called, in particular, to the following definitions from these rules:

Controlled substance means a controlled substance in Schedules I through V of the Controlled Substances Act (21 U.S.C. 812) and as further defined by regulation (21 CFR 1308.11 through 1308.15);

Conviction means a finding of guilt (including a plea of nolo contendere) or imposition of sentence, or both, by any judicial body charged with the responsibility to determine violations of the Federal or State criminal drug statutes;

Criminal drug statute means a Federal or non-Federal criminal statute involving the manufacture, distribution, dispensing, use, or possession of any controlled substance;

Employee means the employee of a grantee directly engaged in the performance of work under a grant, including: (i) All direct charge employees; (ii) All indirect charge employees unless their impact or involvement is insignificant to the performance of the grant; and, (iii) Temporary personnel and consultants who are directly engaged in the performance of work under the grant and who are on the grantee's payroll. This definition does not include workers not on the payroll of the grantee (e.g., volunteers, even if used to meet a matching requirement; consultants or independent contractors not on the grantee's payroll; or employees of subrecipients or subcontractors in covered workplaces).

Certification Regarding Drug-Free Workplace Requirements

Alternate I. (Grantees Other Than Individuals)

The grantee certifies that it will or will continue to provide a drug-free workplace by:

(a) Publishing a statement notifying employees that the unlawful manufacture, distribution, dispensing, possession, or use of a controlled substance is prohibited in the grantee's workplace and specifying the actions that will be taken against employees for violation of such prohibition;

(b) Establishing an ongoing drug-free awareness program to inform employees about—

(1) The dangers of drug abuse in the workplace;

(2) The grantee's policy of maintaining a drug-free workplace;

(3) Any available drug counseling, rehabilitation, and employee assistance programs; and

(4) The penalties that may be imposed upon employees for drug abuse violations occurring in the workplace;

(c) Making it a requirement that each employee to be engaged in the performance of the grant be given a copy of the statement required by paragraph (a);

(d) Notifying the employee in the statement required by paragraph (a) that, as a condition of employment under the grant, the employee will—

(1) Abide by the terms of the statement; and

(2) Notify the employer in writing of his or her conviction for a violation of a criminal drug statute occurring in the workplace no later than five calendar days after such conviction;

(e) Notifying the agency in writing, within ten calendar days after receiving notice under paragraph (d)(2) from an employee or otherwise receiving actual notice of such conviction. Employers of convicted employees must provide notice, including position title, to every grant officer or other designee on whose grant activity the convicted employee was working, unless the Federal agency has designated a central point for the receipt of such notices. Notice shall include the identification number(s) of each affect grant;

(f) Taking one of the following actions, within 30 calendar days of receiving notice under paragraph (d)(2), with respect to any employee who is so convicted—

(1) Taking appropriate personnel action against such an employee, up to and including termination, consistent with the requirements of the Rehabilitation Act of 1973, as amended; or

(2) Requiring such employee to participate satisfactorily in a drug abuse assistance or rehabilitation program approved for such purposes by a Federal, State, or local health, law enforcement, or other appropriate agency;

(g) Making a good faith effort to continue to maintain a drug-free workplace through implementation of paragraphs (a), (b), (c), (d), (e) and (f).

(B) The grantee may insert in the space provided (below the sites) for the performance or work done in connection with the specific grant:

_____

Place of Performance
(Street address, city, county, state, zip code)

Check if there are workplaces on file that are not identified here.

Alternate II. (Grantees Who Are Individuals)

(a) The grantee certifies that, as a condition of the grant, he or she will not engage in the unlawful manufacture, distribution, dispensing, possession, or use of a controlled substance in conducting any activity with the grant;

(b) If convicted of a criminal drug offense resulting from a violation occurring during the conduct of any grant activity, he or she will report the conviction, in writing, within 10 calendar days of the conviction, to every grant officer or other designee, unless the Federal agency designates a central point for the receipt of such notices. When notice is made to such a central point, it shall include the identification number(s) of each affected grant.

Administration for Children and Families, U.S. Department of Health and Human Services: Certification Regarding Debarment, Suspension and Other Responsibility Matters

Certification Regarding Debarment, Suspension, and Other Responsibility Matters—Primary Covered Transactions

Instructions for Certification

1. By signing and submitting this proposal, the prospective primary participant is providing the certification set out below.

2. The inability of a person to provide the certification required below will not necessarily result in denial of participation in this covered transaction. The prospective participant shall submit an explanation of why it cannot provide the certification set out below. The certification or explanation will be considered in connection with the department or agency's determination whether to enter into this transaction. However, failure of the prospective primary participant to furnish a certification or an explanation shall disqualify such person from participation in this transaction.

3. The certification in this clause is a material representation of fact upon which reliance was placed when the department or agency determined to enter into this transaction. If it is later determined that the prospective primary participant knowingly rendered an erroneous certification, in addition to other remedies available to the Federal Government, the department or agency may terminate this transaction for cause or default.

4. The prospective primary participant shall provide immediate written notice to the department or agency to which this proposal is submitted if at any time the prospective primary participant learns that its certification was erroneous when submitted or has become erroneous by reason of changed circumstances.

5. The terms covered transaction, debarred, suspended, ineligible, lower tier covered transaction, participant, person, primary covered transaction, principal, proposal, and voluntarily excluded, as used in this clause, have the meanings set out in the Definitions and Coverage sections of the rules implementing Executive Order 12549. You may contact the department or agency to which this proposal is being submitted for assistance in obtaining a copy of those regulations.

6. The prospective primary participant agrees by submitting this proposal that, should the proposed covered transaction be entered into, it shall not knowingly enter into any lower tier covered transaction with a person who is proposed for debarment under 48 CFR part 9, subpart 9.4, debarred, suspended, declared ineligible, or voluntarily excluded from participation in this covered transaction, unless authorized by the department or agency entering into this transaction.

7. The prospective primary participant further agrees by submitting this proposal that it will include the clause titled ''Certification Regarding Debarment, Suspension, Ineligibility and Voluntary Exclusion-Lower Tier Covered Transaction,'' provided by the department or agency entering into this covered transaction, without modification, in all lower tier covered transactions and in all solicitations for lower tier covered transactions.

8. A participant in a covered transaction may rely upon a certification of a prospective participant in a lower tier covered transaction that it is not proposed for debarment under 48 CFR part 9, subpart 9.4, debarred, suspended, ineligible, or voluntarily excluded from the covered transaction, unless is knows that the certification is erroneous. A participant may decide the method and frequency by which it determines the eligibility of its principals. Each participant may, but is not required to, check the List of Parties Excluded from Federal Procurement and Nonprocurement Programs.

9. Nothing contained in the foregoing shall be construed to require establishment of a system of records in order to render in good faith the certification required by this clause. The knowledge and information of a participant is not required to exceed that which is normally possessed by a prudent person in the ordinary course of business dealings.

10. Except for transactions authorized under paragraph 6 of these instructions, if a participant in a covered transaction knowingly enters into a lower tier covered transaction with a person who is proposed for debarment under 48 CFR part 9, subpart 9.4, suspended, debarred, ineligible, or voluntarily excluded from participation in this transaction, in addition to other remedies available to the Federal Government, the department or agency may terminate this transaction for cause or default.

Certification Regarding Debarment, Suspension, and Other Responsibility Matters—Primary Covered Transactions

(1) The prospective primary participant certifies to the best of its knowledge and belief, that it and its principals:

(a) Are not presently debarred, suspended, proposed for debarment, declared ineligible, or voluntarily excluded by any Federal department or agency;

(b) Have not within a three-year period preceding this proposal been convicted of or had a civil judgment rendered against them for commission of fraud or a criminal offense in connection with obtaining, attempting to obtain, or performing a public (Federal, State or local) transaction or contract under a public transaction; violation of Federal or State antitrust statutes or commission of embezzlement, theft, forgery, bribery, falsification or destruction of records, making false statements, or receiving stolen property;

(c) Are not presently indicted for or otherwise criminally or civilly charged by a governmental entity (Federal, State or local) with commission of any of the offenses enumerated in paragraph (1)(b) of this certification; and

(d) Have not within a three-year period preceding this application/proposal had one or more public transactions (Federal, State or local) terminated for cause or default.

(2) Where the prospective primary participant is unable to certify to any of the statements in this certification, such prospective participant shall attach an explanation to this proposal.

Certification Regarding Debarment, Suspension, Ineligibility and Voluntary Exclusion—Lower Tier Covered Transactions

Instructions for Certification

1. By signing and submitting this proposal, the prospective lower tier participant is providing the certification set out below.

2. The certification in this clause is a material representation of fact upon which reliance was placed when this transaction was entered into. If it is later determined that the prospective lower tier participant knowingly rendered an erroneous certification, in addition to other remedies available to the Federal Government the department or agency with which this transaction originated may pursue available remedies, including suspension and/or debarment.

3. The prospective lower tier participant shall provide immediate written notice to the person to which this proposal is submitted if at any time the prospective lower tier participant learns that its certification was erroneous when submitted or had become erroneous by reason of changed circumstances.

4. The terms covered transaction, debarred, suspended, ineligible, lower tier covered transaction, participant, person, primary covered transaction, principal, proposal, and voluntarily excluded, as used in this clause, have the meaning set out in the Definitions and Coverage sections of rules implementing Executive Order 12549. You may contact the person to which this proposal is submitted for assistance in obtaining a copy of those regulations.,

5. The prospective lower tier participant agrees by submitting this proposal that, [[Page 33043]] should the proposed covered transaction be entered into, it shall not knowingly enter into any lower tier covered transaction with a person who is proposed for debarment under 48 CFR part 9, subpart 9.4, debarred, suspended, declared ineligible, or voluntarily excluded from participation in this covered transaction, unless authorized by the department or agency with which this transaction originated.

6. The prospective lower tier participant further agrees by submitting this proposal that it will include this clause titled ''Certification Regarding Debarment, Suspension, Ineligibility and Voluntary Exclusion-Lower Tier Covered Transaction,'' without modification, in all lower tier covered transactions and in all solicitations for lower tier covered transactions.

7. A participant in a covered transaction may rely upon a certification of a prospective participant in a lower tier covered transaction that it is not proposed for debarment under 48 CFR part 9, subpart 9.4, debarred, suspended, ineligible, or voluntarily excluded from covered transactions, unless it knows that the certification is erroneous. A participant may decide the method and frequency by which it determines the eligibility of its principals. Each participant may, but is not required to, check the List of Parties Excluded from Federal Procurement and Nonprocurement Programs.

8. Nothing contained in the foregoing shall be construed to require establishment of a system of records in order to render in good faith the certification required by this clause. The knowledge and information of a participant is not required to exceed that which is normally possessed by a prudent person in the ordinary course of business dealings.

9. Except for transactions authorized under paragraph 5 of these instructions, if a participant in a covered transaction knowingly enters into a lower tier covered transaction with a person who is proposed for debarment under 48 CFR part 9, subpart 9.4, suspended, debarred, ineligible, or voluntarily excluded from participant in this transaction, in addition to other remedies available to the Federal Government, the department or agency with which this transaction originated may pursue available remedies, including suspension and/or debarment.

Certification Regarding Debarment, Suspension, Ineligibility an Voluntary Exclusion—Lower Tier Covered Transactions

(1) The proposective lower tier participant certifies, by submission of this proposal, that neither it nor its principals is presently debarred, suspended, proposed for debarment, declared ineligible, or voluntarily excluded from participation in this transaction by any Federal department or agency.

(2) Where the prospective lower tier participant is unable to certify to any of the statements in this certification, such prospective participant shall attach an explanation to this proposal.

Attachment F

Certification Regarding Environmental Tobacco Smoke

Public Law 103227, Part C Environmental Tobacco Smoke, also known as the Pro Children Act of 1994 (Act), requires that smoking not be permitted in any portion of any indoor routinely owned or leased or contracted for by an entity and used routinely or regularly for provision of health, day care, education, or library services to children under the age of 18, if the services are funded by Federal programs either directly or through State or local governments, by Federal grant, contract, loan, or loan guarantee. The law does not apply to children's services provided in private residences, facilities funded solely by Medicare or Medicaid funds, and portions of facilities used for inpatient drug or alcohol treatment. Failure to comply with the provisions of the law may result in the imposition of a civil monetary penalty of up to $1000 per day and/or the imposition of an administrative compliance order on the responsible entity. By signing and submitting this application the applicant/grantee certifies that it will comply with the requirements of the Act.

The applicant/grantee further agrees that it will require the language of this certification be included in any subawards which contain provisions for the children's services and that all subgrantees shall certify accordingly.

Certification Regarding Lobbying

Certification for Contracts, Grants, Loans, and Cooperative Agreements

The undersigned certifies, to the best of his or her knowledge and belief, that:

(1) No Federal appropriated funds have been paid or will be paid, by or on behalf of the undersigned, to any person for influencing or attempting to influence an officer or employee of an agency, a Member of Congress, an officer or employee of Congress, or an employee of a Member of Congress in connection with the awarding of any Federal contract, the making of any grant, the making of any Federal loan, the entering into of any cooperative agreement, and the extension, continuation, renewal amendment, or modification of any Federal contract, grant, loan, or cooperative agreement.

(2) If any funds other than Federal appropriated funds have been paid or will be paid to any person for influencing or attempting to influence an officer or employee of any agency, a Member of Congress, an officer or employee of Congress, or an employee of a Member of Congress in connection with this Federal contract, grant, loan, or cooperative agreement, the undersigned shall complete and submit Standard Form–LLL, ''Disclosure Form to Report Lobbying,'' in accordance with its instructions.

(3) The undersigned shall require that the language of this certification be included in the award documents for all subawards at all tiers (including subcontracts, subgrants, and contracts under grants, loans, and cooperative agreements) and that all subrecipients shall certify and disclose accordingly. This certification is a material representation of fact upon which reliance was placed when this transaction was made or entered into. Submission of this certification is a prerequisite for making or entering into this transaction imposed by section 1352, title 31, U.S. Code, Any person who fails to file the required certification shall be subject to a civil penalty of not less than $10,000 and not more than $100,000 for each such failure.

Statement for Loan Guarantees and Loan Insurance

The undersigned states, to the best of his or her knowledge and belief, that:

If any funds have been paid or will be paid to any person for influencing or attempting to influence an officer or employee of any agency, a Member of Congress, an officer or employee of Congress, or an employee of a Member of Congress in connection with this commitment providing for the United States to insure or guarantee a loan, the undersigned shall complete and submit Standard Form–LLL, ''Disclosure Form to Report Lobbying,'' in accordance with its instructions. Submission of this statement in a prerequisite for making or entering into this transaction imposed by section 1352, title 31, U.S. Code. Any person who fails to file the required statement shall be subject to a civil penalty of not less than $10,000 and not more than $100,000 for each such failure.

_____

Signature

_____

Title

_____

Organization

Attachment G, Page 2

DISCLOSURE OF LOBBYING ACTIVITIES

Approved by OMB 0348-0046

Complete this form to disclose lobbying activities pursuant to 31 U.S.C. 1352
(See reverse for public burden disclosure.)

1. Type of Federal Action:	2. Status of Federal Action:	3. Report Type:
☐ a. contract b. grant c. cooperative agreement d. loan e. loan guarantee f. loan insurance	☐ a. bid/offer/application b. initial award c. post-award	☐ a. initial filing b. material change **For Material Change Only:** year _____ quarter _____ date of last report _____

4. Name and Address of Reporting Entity:	5. If Reporting Entity in No. 4 is a Subawardee, Enter Name and Address of Prime:
☐ Prime ☐ Subawardee Tier _____, *if known*: **Congressional District**, *if known*:	 **Congressional District**, *if known*:
6. Federal Department/Agency:	**7. Federal Program Name/Description:** CFDA Number, *if applicable*: _____
8. Federal Action Number, *if known*:	**9. Award Amount**, *if known*: $
10. a. Name and Address of Lobbying Registrant (*if individual, last name, first name, MI*):	**b. Individuals Performing Services** (*including address if different from No. 10a*) (*last name, first name, MI*):
11. Information requested through this form is authorized by title 31 U.S.C. section 1352. This disclosure of lobbying activities is a material representation of fact upon which reliance was placed by the tier above when this transaction was made or entered into. This disclosure is required pursuant to 31 U.S.C. 1352. This information will be reported to the Congress semi-annually and will be available for public inspection. Any person who fails to file the required disclosure shall be subject to a civil penalty of not less that $10,000 and not more than $100,000 for each such failure.	Signature: _____ Print Name: _____ Title: _____ Telephone No.: _____ Date: _____
Federal Use Only:	Authorized for Local Reproduction Standard Form LLL (Rev. 7-97)

BILLING CODE 4184–01–C

Attachment G, Page 3

Instructions for Completion of SF–LLL, Disclosure of Lobbying Activities

This disclosure form shall be completed by the reporting entity, whether subawardee or prime Federal recipient, at the initiation or receipt of a covered Federal action, or a material change to a previous filing, pursuant to title 31 U.S.C. section 1352. The filing of a form is required for each payment or agreement to make payment to any lobbying entity for influencing or attempting to influence an officer or employee of any agency, a Member of Congress, an officer or employee of Congress, or an employee of a Member of Congress in connection with a covered Federal action. Complete all items that apply for both the initial filing and material change report. Refer to the implementing guidance published by the Office of Management and Budget for additional information.

1. Identify the type of covered Federal action for which lobbying activity is and/or has been secured to influence the outcome of a covered Federal action

2. Identify the status of the covered Federal action.

3. Identify the appropriate classification of this report. If this is a followup report caused by a material change to the information previously reported, enter the year and quarter in which the change occurred. Enter the date of the last previously submitted report by this reporting entity for this covered Federal action.

4. Enter the full name, address, city, State and zip code of the reporting entity. Include Congressional District, if known. Check the appropriate classification of the reporting entity that designates if it is, or expects to be, a prime or subaward recipient. Identify the tier of the subawardee, e.g., the first subawardee of the prime is the 1st tier. Subawards include but are not limited to subcontracts, subgrants and contract awards under grants.

5. If the organization filing the report in item 4 checks "Subawardee," then enter the full name, address, city, State and zip code of the prime Federal recipient. Include Congressional District, if known.

6. Enter the name of the Federal agency making the award or loan commitment. Include at least one organizational level below agency name, if known. For example, Department of Transportation, United States Coast Guard.

7. Enter the Federal program name or description for the covered Federal action (item 1). If known, enter the full Catalog of Federal Domestic Assistance (CFDA) number for grants, cooperative agreements, loans, and loan commitments.

8. Enter the most appropriate Federal identifying number available for the Federal action identified in item 1 (e.g., Requests for Proposal (RFP) number; Invitation for Bid (IFB) number; grant announcement number; the contract, grant, or loan award number; the application/proposal control number assigned by the Federal agency). Include prefixes, e.g., ''RFP–DE–90–001.''

9. For a covered Federal action where there has been an award or loan number commitment by the Federal agency, enter the Federal amount of the award/loan commitment for the prime entity identified in item 4 or 5.

10. (a) Enter the full name, address, city, State and zip code of the lobbying registrant under the Lobbying Disclosure Act of 1995 engaged by the reporting entity identified in item 4 to influence the covered Federal action.

(b) Enter the full names of the individual(s) performing services, and include full address if different from 10(a). Enter Last Name, First Name, and Middle Initial (MI).

11. The certifying official shall sign and date the form, print his/her name, title, and telephone number.

According to the Paperwork Reduction Act, as amended, no persons are required to respond to a collection of information unless it displays a valid OMB Control Number. The valid OMB control number for this information collection is OMB No. 0348–0046. Public reporting burden for this collection of information is estimated to average 10 minutes per response, including time for reviewing instructions, searching existing data sources, gathering and maintaining the data needed, and completing and reviewing the collection of information. Send comments regarding the burden estimate or any other aspect of this collection of information, including suggestions for reducing this burden, to the Office of Management and Budget, Paperwork Reduction Project (0348–0046), Washington, DC 20503.

State Single Point of Contact Listing Maintained by OMB

In accordance with Executive Order #12372, ''Intergovernmental Review of Federal Programs,'' Section 4, ''the Office of Management and Budget (OMB) shall maintain a list of official State entities designated by the States to review and coordinate proposed financial assistance and direct Federal development.'' This attached listing is the OFFICIAL OMB LISTING. OMB's point of contact for the SPOC list is Frederick J. Charney (202) 395–3993 or grants@omb.eop.gov. This listing is also published in the Catalogue of Federal Domestic Assistance biannually.

OMB State Single Point of Contact Listing

Arizona

Joni Saad
Arizona State Clearinghouse
3800 N. Central Avenue
Fourteenth Floor
Phoenix, Arizona 85012
Telephone: (602) 280–1315
FAX: (602) 280–8144

Arkansas

Mr. Tracy L. Copeland
Manager, State Clearinghouse
Office of Intergovernmental Services
Department of Finance and Administration
515 W. 7th St., Room 412
Little Rock, Arkansas 72203
Telephone: (501) 682–1074
FAX: (501) 682–5206

California

Grants Coordination
State Clearinghouse
Office of Planning & Research
1400 Tenth Street, Room 121
Sacramento, California 95814
Telephone: (916) 445–0613
FAX: (916) 323–3018

Delaware

Francine Booth
State Single Point of Contact
Executive Department
Office of the Budget
540 S. Dupont Highway
Suite 5
Dover, Delaware 19901
Telephone: (302) 739–3326
FAX: (302) 739–5661

District of Columbia

Charles Nichols
State Single Point of Contact
Office of Grants Mgmt. & Dev.
717 14th Street, N.W. Suite 1200
Washington, DC 20005
Telephone: (202) 727–1700 (direct)
(202) 727–6537 (secretary)
FAX: (202) 727–1617

Florida

Florida State Clearinghouse
Department of Community Affairs
2555 Shumard Oak Blvd.
Tallahassee, Florida 32399–2100
Telephone: (850) 922–5438
FAC: (850) 414–0479
Contact: Cherie Trainor

Georgia

Deborah Stephens
Coordinator
Georgia State Clearinghouse
270 Washington Street, S.W.—8th Floor
Atlanta, Georgia 30334
Telephone: (404) 656–3855
FAX: (404) 656–7901

Illinois

Virginia Bova, State Single Point of Contact
Illinois Department of Commerce and Community Affairs
James R. Thompson Center
100 West Randolph, Suite 3–400
Chicago, Illinois 60601
Telephone: (312) 814–6028
FAX (312) 814–1800

Indiana

Renee Miller
State Budget Agency
212 State House
Indianapolis, Indiana 46204–2796
Telephone: (317) 232–2971 (directline)
FAX: (317) 233–3323

Iowa

Steven R. McCann
Division for Community Assistance
Iowa Department of Economic Development
200 East Grand Avenue
Des Moines, Iowa 50309
Telephone: (515) 242–4719
FAX: (515) 242–4809

Kentucky

Kevin J. Goldsmith, Director
Sandra Brewer, Executive Secretary
Intergovernmental Affairs
Office of the Governor
700 Capitol Avenue
Frankfort, Kentucky 40601
Telephone: (502) 564–2611
FAX: (502) 564–0437

Maine

Joyce Benson
State Planning Office
184 State Street
38 State House Station
Augusta, Maine 04333
Telephone: (207) 287–3261
FAX: (207) 287–6489

Maryland

Linda Janey
Manager, Plan & Project Review
Maryland Office of Planning
301 W. Preston Street—Room 1104
Baltimore, Maryland 21201–2365
Staff Contact: Linda Janey
Telephone: (410) 767–4490
FAX: (410) 767–4480

Michigan

Richard Pfaff
Southeast Michigan Council of Governments
660 Plaza Drive—Suite 1900
Detroit, Michigan 48226
Telephone: (313) 961–4266
FAX: (313) 961–4869

Mississippi

Cathy Mallette
Clearinghouse Officer
Department of Finance and Administration
550 High Street
303 Walters Sillers Building
Jackson, Mississippi 39201–3087
Telephone: (601) 359–6762
FAX: (601) 359–6758

Missouri

Lois Pohl
Federal Assistance Clearinghouse
Office of Administration
P.O. Box 809
Jefferson Building, 9th Floor
Jefferson City, Missouri 65102
Telephone: (314) 751–4834
FAX: (314) 751–7819

Nevada

Department of Administration

State Clearinghouse
209 E. Musser Street, Room 220
Carson City, Nevada 89710
Telephone: (702) 687–4065
FAX: (702) 687–3983
Contact: Heather Elliot
(702) 687–6367

New Hampshire

Jeffrey H. Taylor
Director, New Hampshire Office of State Planning
Attn: Intergovermental Review Process
Mike Blake
2½ Beacon Street
Concord, New Hampshire 03301
Telephone: (603) 271–1728
FAX: (603) 271–1728

New Mexico

Nick Mandell
Local Government Division
Room 201 Bataan Memorial Building
Santa Fe, New Mexico 87503
Telephone: (505) 827–3640
Fax: (505) 827–4984

North Carolina

Jeanette Furney
North Carolina Department of Administration
116 West Jones Street—Suite 5106
Raleigh, North Carolina 27603–8003
Telephone: (919) 733–7232
FAX: (919) 733–9571

North Dakota

North Dakota Single Point of Contact
Office of Intergovernmental Assistance
600 East Boulevard Avenue
Bismarck, North Dakota 58505–0170
Telephone: (701) 224–2094
FAX: (701) 224–2308

Rhode Island

Kevin Nelson
Review Coordinator
Department of Administration
Division of Planning
One Capitol Hill, 4th Floor
Providence, Rhode Island 02908–5870
Telephone: (401) 277–2656
FAX: (401) 277–2083

South Carolina

Omeagia Burgess
State Single Point of Contact
Budget and Control Board
Office of State Budget
1122 Ladies Street—12th Floor
Columbia, South Carolina 29201
Telephone: (803) 734–0494
FAX: (803) 734–0645

Texas

Tom Adams
Governors Office
Director, Intergovernmental Coordination
P.O. Box 12428
Austin, Texas 78711
Telephone: (512) 463–1771
FAX: (512) 936–2681

Utah

Carolyn Wright
Utah State Clearinghouse
Office of Planning and Budget
Room 116 State Capitol
Salt Lake City, Utah 84114
Telephone: (801) 538–1027
FAX: (801) 538–1547

West Virginia

Fred Cutlip, Director
Community Development Division
W. Virginia Development Office
Building #6, Room 553
Charleston, West Virginia 25305
Telephone: (304) 558–4010
FAX: (304) 558–3248

Wisconsin

Jeff Smith
Section Chief, Federal/State Relations
Wisconsin Department of Administration
101 East Wilson Street—6th Floor
P.O. Box 7868
Madison, Wisconsin 53707
Telephone: (608) 266–0267
FAX: (608) 267–6931

Wyoming

Sandy Ross
State Single Point of Contact
Department of Administration and Information
2001 Capitol Avenue, Room 214
Cheyenne, WY 82002
Telephone: (307) 777–5492
FAX: (307) 777–3696

[FR Doc. 02–17520 Filed 7–11–02; 8:45 am]

BILLING CODE 4184–01–P

Federal Register

Friday,
July 12, 2002

Part VII

Department of Health and Human Services

Centers for Disease Control and Prevention

Preliminary Guidance for Notification of Possession of Select Agents; Notice

DEPARTMENT OF HEALTH AND HUMAN SERVICES

Centers for Disease Control and Prevention

Preliminary Guidance for Notification of Possession of Select Agents

AGENCY: Centers for Disease Control and Prevention, Department of Health and Human Services.

ACTION: General notice.

SUMMARY: The purpose of this Notice is to announce preliminary guidance for notification of possession of select agents as mandated in Section 202(a) of Public Law 107–188 ''Public Health Security and Bioterrorism Preparedness and Response Act of 2002.''

FOR FURTHER INFORMATION CONTACT: John R. Moore, Centers for Disease Control and Prevention, Office of Program Planning and Evaluation, 1600 Clifton Road NE, Mailstop D–23, Atlanta, Georgia 30333. Telephone: (404) 639–7070.

SUPPLEMENTARY INFORMATION: On June 12, 2002, President George W. Bush signed Public Law 107–188 ''Public Health Security and Bioterrorism Preparedness and Response Act of 2002.'' Section 202(a) of the Act directs the Secretary of the Department of Health and Human Services, within 30 days of enactment, to provide written guidance on how persons in possession of biological agents or toxins shall notify the Secretary of such possession. To meet this requirement, the Centers for Disease Control and Prevention (CDC) has submitted a proposed data collection instrument (see draft form below) and guidance document to the Office for Management and Budget (OMB) for approval under the Paperwork Reduction Act. CDC published a notice in the **Federal Register** on July 2, 2002 inviting public comments on the proposed data collection. Public comments are due by July 16, 2002. Within two weeks of this date, and upon receipt of OMB approval, CDC will publish another notice in the **Federal Register** announcing approval and publication of the data collection instrument. The data collection instrument will contain the list of select agents currently contained in 42 CFR part 72, appendix A.

Each facility should designate a responsible facility official (RFO) to complete this form by September 10, 2002. It is the responsibility of the RFO to ensure management oversight of this notification requirement. The RFO should be either a safety officer, a senior management official of the facility, or both, who has been authorized by the facility to complete and submit the notification form. The RFO should not be an individual who actually possesses, uses, or transfers such agents or toxins. To complete the notification form, the RFO will need to inventory its facility and consult with others (*e.g.*, principal investigators) as necessary to obtain the information required for the notification form. The RFO must review and sign the notification form and will be the point of contact if CDC has questions concerning the form or other matters related to the Act. Many facilities will receive the form via direct mailing, and the form will also be published in the **Federal Register**.

Further guidance, the approved data collection instrument, and location of submission will be announced at a later date.

Dated: July 10, 2002.

Nancy E. Cheal,

Acting Associate Director for Policy, Planning and Evaluation, Centers for Disease Control and Prevention.

BILLING CODE 4163–18–P

DRAFT

FORM APPROVED
OMB NO. 0920-XXXX
EXP DATE XX/XX/XXXX

DEPARTMENT OF HEALTH AND HUMAN SERVICES CENTERS FOR DISEASE CONTROL AND PREVENTION NATIONAL CENTER FOR INFECTIOUS DISEASES LABORATORY REGISTRATION/SELECT AGENT TRANSFER PROGRAM ATLANTA, GA 30333	U.S. DEPARTMENT OF AGRICULTURE ANIMAL AND PLANT HEALTH INSPECTION SERVICE VETERINARY SERVICES NATIONAL CENTER FOR IMPORT-EXPORT, PRODUCTS PROGRAM RIVERDALE, MD 20737

NOTIFICATION OF POSSESSION OF SELECT AGENTS OR HIGH CONSEQUENCE LIVESTOCK PATHOGENS AND TOXINS

NAME OF FACILITY	NAME OF RESPONSIBLE FACILTIY OFFICAL (RFO) AND ADDRESS, IF DIFFERENT FROM FACILITY
ADDRESS OF FACILITY	TITLE OF RFO
	RFO TELEPHONE NUMBER
	RFO FAX NUMBER

CHECK ("X") FOR EACH AGENT(S) OR TOXIN(S) USED OR POSSESSED BY YOUR FACILITY (CHECK ONE OR MORE CATEGORIES AS APPROPRIATE)	VIABLE	NUCLEIC ACID OR GENETIC ELEMENTS FROM AGENT	VACCINE APPROVED BY USDA OR FDA (modified)	REGISTERED WITH HHS SELECT AGENT PROGRAM
HHS SELECT AGENTS				
☐ CRIMEAN-CONGO HAEMORRHAGIC FEVER VIRUS				
☐ EBOLA VIRUSES				
☐ LASSA FEVER VIRUS				
☐ MARBURG VIRUS				
☐ *RICKETTSIA PROWAZEKII*				
☐ *RICKETTSIA RICKETTSII*				
☐ SOUTH AMERICAN HAEMORRHAGIC FEVER VIRUSES				
☐ TICK-BORNE ENCEPHALITIS COMPLEX VIRUSES				
☐ VARIOLA MAJOR VIRUS (SMALLPOX VIRUS)				
☐ VIRUSES CAUSING HANTAVIRUS PULMONARY SYNDROME				
☐ YELLOW FEVER VIRUS				
☐ *YERSINIA PESTIS*				
☐ ABRIN				
☐ CONOTIXINS				
☐ DIACETOXYSCIRPENOL				
☐ RICIN				
☐ SAXITOXIN				
☐ TETRODOTOXIN				
USDA-HHS OVERLAP AGENTS				
☐ *BACILLUS ANTHRACIS*				
☐ *BRUCELLA ABORTUS*				
☐ *BRUCELLA MELITENSIS*				
☐ *BRUCELLA SUIS*				
☐ *BURKHOLDERIA (PSEUDOMONAS) MALLEI*				
☐ *BURKHOLDERIA (PSEUDOMONAS) PSEUDOMALLEI*				
☐ *CLOSTRIDIUM BOTULINUM*				
☐ *COCCIDIOIDES IMMITIS*				
☐ *COXIELLA BURNETTII*				
☐ EASTERN EQUINE ENCEPHALITIS VIRUS				
☐ EQUINE MORBILLIVIRUS (HENDRA VIRUS)/NIPAH VIRUS				
☐ *FRANCISELLA TULARENSIS*				
☐ RIFT VALLEY FEVER VIRUS				
☐ VENEZUELAN EQUINE ENCEPHALITIS VIRUS				
☐ AFLATOXINS				
☐ BOTULINUM TOXINS				
☐ *CLOSTRIDIUM PERFRINGENS* EPSILON TOXIN				
☐ SHIGATOXIN				
☐ STAPHYLOCOCCAL ENTEROTOXIN				
☐ T-2 TOXIN				

DRAFT

CHECK ("X") FOR EACH AGENT(S) OR TOXIN(S) USED OR POSSESSED BY YOUR FACILITY (CHECK ONE OR MORE CATEGORIES AS APPROPRIATE)	VIABLE	NUCLEIC ACID OR GENETIC ELEMENTS FROM AGENT	VACCINE APPROVED BY USDA OR FDA (modified)	REGISTERED WITH HHS SELECT AGENT PROGRAM
USDA HIGH CONSEQUENCE OF LIVESTOCK PATHOGENS AND TOXINS				
☐ AFRICAN HORSE SICKNESS VIRUS				
☐ AFRICAN SWINE FEVER				
☐ AKABANE VIRUS				
☐ AVIAN INFLUENZA VIRUS (HIGHLY PATHOGENIC)				
☐ BLUE TONGUE VIRUS (EXOTIC)				
☐ BOVINE SPONGIFORM ENCEPALOPATHY AGENT				
☐ CAMEL POX VIRUS				
☐ CLASSICAL SWINE FEVER				
☐ *COWDRIA RUMINANTIUM* (HEARTWATER)				
☐ FOOT AND MOUTH DISEASE VIRUS				
☐ GOAT POX VIRUS				
☐ JAPANESE ENCEPHALITIS VIRUS				
☐ LUMPY SKIN DISEASE VIRUS				
☐ MALIGNANT CATARRHAL FEVER				
☐ MENANGLE VIRUS				
☐ *MYCOPLASMA CAPRICOLUM/M.*F 38/M.*M YCOIDES CAPRI* (CONTAGIOUS CAPRINE PLEUROPNEUMONIA AGENT)				
☐ *MYCOPLASMA MYCOIDES MYCOIDES* (CONTAGIOUS BOVINE PLEUROPNEUMONIA AGENT)				
☐ NEWCASTLE DISEASE VIRUS (EXOTIC)				
☐ PESTE DES PETITS RUMINANTS				
☐ RINDERPEST VIRUS				
☐ SHEEP POX				
☐ SWINE VESICULAR DISEASE VIRUS				
☐ VESICULAR STOMATITIS VIRUS				

TYPE OF FACILITY: ☐ ACADEMIC ☐ GOVERNMENT ☐ COMMERICAL ☐ PRIVATE ☐ OTHER (PLEASE EXPLAIN)

TPYE OF WORK TO BE PERFORMED AT FACILITY *(PROPOSED USE OF MATERIAL AND DERIVATIVES; DIAGNOSTICS, VACCINE DEVELOPMENT, ETC., IF FOR USE IN ANIMALS, SPECIFY SPECIES)*

FOR ANY LISTED AGENTS OR TOXINS POSSESSED BY YOUR FACILIY, LIST U.S. VETERINARY PERMIT FOR IMPORTATION AND TRANSPORTATIONS OF CONTROLLED MATERIALS AND ORGANISMS AND VECTORS NUMBERS (VS Form 16-6A) (if applicable)

CDC SELECT AGENT TRANSFER PROGRAM REGISTRATION NUMBER AND EXPIRATION DATE (if applicable)

I hereby certify that I have been designated as the Responsible Facility Official for the institution/organization listed above, that I am authorized to bind the institution/organization, and that the information supplied on this form is to the best of my knowledge accurate and truthful. I understand that a false statement on any part of this form could result in a fine up to $500,000 or imprisonment or up to five years, or both for each violation (18 U.S.C §1001; 1 8 U.S.C § § 3559,3571)

SIGNATURE OF RESPONSIBLE FACILITY OFFICIAL

TYPED NAME AND TITLE | DATE

☐ **DECLARATION OF NON-POSSESSION: THIS FACILITY DOES NOT POSSESS AN AGENT ON THIS LIST.**

I hereby certify that I have been designated as the Responsible Facility Official for the institution/organization listed above, that I am authorized to bind the institution/organization, and that the information supplied on this form is to the best of my knowledge accurate and truthful. I understand that a false statement on any part of this form could result in a fine of up to $500,000 or imprisonment or up to five years, or both for each violation (18 U.S.C §10011 8 U.S.C § § 3559,3571).

SIGNATURE OF RESPONSIBLE FACILITY OFFICIAL

TYPED NAME AND TITLE | DATE

Public reporting burden of this collection of information is estimated to average 2 hours per response, including the time for reviewing instructions, searching existing data sources, gathering and maintaining the data needed and completing and reviewing the collection of information. An agency may not conduct or or sponsor, and a person in not required to respond to a collection of information unless it displays a currently valid OMB control number. Send comments regarding this burden estimate or any other aspect of this collection of information, including suggestions for reducing this burden to CDC/ATSDR information Clearance Officer; 1600 Clifton Road NE, MS D-24, Atlanta, Georgia 30333; ATTN: PRA (0920-xxxx).

RETURN THIS FORM TO:

[LOCATION TO BE DETERMINED]

CDC FORM XXXX
DATE

[FR Doc. 02–17771 Filed 7–11–02; 10:24 am]
BILLING CODE 4163–18–C

Federal Register

Friday,
July 12, 2002

Part VIII

Department of the Interior

Bureau of Indian Affairs

Indian Gaming; Notice

DEPARTMENT OF THE INTERIOR

Bureau of Indian Affairs

Indian Gaming

AGENCY: Bureau of Indian Affairs, Interior.

ACTION: Notice of amendment to approved Tribal-State Compact.

SUMMARY: Under Section 11 of the Indian Gaming Regulatory Act of 1988 (IGRA), Public Law 100–497, 25 U.S.C. 2710, the Secretary of the Interior shall publish, in the **Federal Register**, notice of the approved Tribal-State compacts for the purpose of engaging in Class III gaming activities on Indian lands. The Assistant Secretary—Indian Affairs, Department of the Interior, through his delegated authority, has approved the Amendment to the Tribal-State Compact for Class III Gaming between the Puyallup Tribe of Indians and the State of Washington, which was executed on May 30, 2002.

DATES: This action is effective July 12, 2002.

FOR FURTHER INFORMATION CONTACT: George T. Skibine, Director, Office of Indian, Gaming Management, Bureau of Indian Affairs, Washington, DC 20240, (202) 219–4066.

Dated: June 19, 2002.

Neal A. McCaleb,

Assistant Secretary—Indian Affairs.

[FR Doc. 02–17642 Filed 7–11–02; 11:14 am]

BILLING CODE 4310–4N–M

Reader Aids

Federal Register

Vol. 67, No. 134

Friday, July 12, 2002

CUSTOMER SERVICE AND INFORMATION

Federal Register/Code of Federal Regulations	
General Information, indexes and other finding aids	**202–523–5227**
Laws	**523–5227**
Presidential Documents	
Executive orders and proclamations	**523–5227**
The United States Government Manual	**523–5227**
Other Services	
Electronic and on-line services (voice)	**523–3447**
Privacy Act Compilation	**523–3187**
Public Laws Update Service (numbers, dates, etc.)	**523–6641**
TTY for the deaf-and-hard-of-hearing	**523–5229**

ELECTRONIC RESEARCH

World Wide Web

Full text of the daily Federal Register, CFR and other publications is located at: **http://www.access.gpo.gov/nara**

Federal Register information and research tools, including Public Inspection List, indexes, and links to GPO Access are located at: **http://www.nara.gov/fedreg**

E-mail

FEDREGTOC-L (Federal Register Table of Contents LISTSERV) is an open e-mail service that provides subscribers with a digital form of the Federal Register Table of Contents. The digital form of the Federal Register Table of Contents includes HTML and PDF links to the full text of each document.

To join or leave, go to **http://listserv.access.gpo.gov** and select *Online mailing list archives, FEDREGTOC-L, Join or leave the list (or change settings);* then follow the instructions.

PENS (Public Law Electronic Notification Service) is an e-mail service that notifies subscribers of recently enacted laws.

To subscribe, go to **http://hydra.gsa.gov/archives/publaws-l.html** and select *Join or leave the list* (or change settings); then follow the instructions.

FEDREGTOC-L and **PENS** are mailing lists only. We cannot respond to specific inquiries.

Reference questions. Send questions and comments about the Federal Register system to: **info@fedreg.nara.gov**

The Federal Register staff cannot interpret specific documents or regulations.

FEDERAL REGISTER PAGES AND DATE, JULY

44015–44348 1
44349–44522 2
44523–44756 3
44757–45048 5
45049–45292 8
45293–45626 9
45627–45894 10
45895–46092 11
46093–46368 12

CFR PARTS AFFECTED DURING JULY

At the end of each month, the Office of the Federal Register publishes separately a List of CFR Sections Affected (LSA), which lists parts and sections affected by documents published since the revision date of each title.

3 CFR

Proclamations:
7529 (See 7576).....45285
7575.....44755
7576.....45285
Executive Orders:
13021 (Revoked by 13270).....45288
13129 (See EO 13268).....44751
13224 (Amended by EO 13268).....44751
13268.....44751
13269.....45287
13270.....45288
13271.....46091

7 CFR

301.....44523
457.....46093
762.....44015
982.....45049
1200.....44349
1520.....45895
Proposed Rules:
300.....45922
319.....45922
800.....44571
922.....44095
1724.....44396
1726.....44396
1755.....44396

8 CFR

214.....44344
Proposed Rules:
103.....45402
212.....45402
245.....45402

9 CFR

94 .....44016, 44524, 45896
Proposed Rules:
93.....44097

10 CFR

431.....45018, 45028
Proposed Rules:
170.....44573
171.....44573

12 CFR

Ch. III.....44351
261a.....44526
Proposed Rules:
703.....44270
704.....44270
1720.....44577

14 CFR

21.....45194
25.....44018, 45627
36.....45194
39 .....44024, 44028, 44030, 44526, 44527, 45053, 45192, 45293, 45295, 45629, 45897, 46096, 46098, 46100
71 .....45192, 45630, 45631, 45632
91.....45194
95.....44033, 45296
97.....46102
1260.....45790
1274.....45790
Proposed Rules:
25.....44111
39 .....44116, 44119, 44401, 44404, 44578, 45410, 45412, 45675, 45678, 45680, 46130, 46132
71.....45682

15 CFR

700.....45632
719.....45632
720.....45632
766.....45632
Proposed Rules:
930.....44407

17 CFR

1.....44036
4.....44931
30.....45056
140.....45299
240.....46104
Proposed Rules:
210.....44964
229.....44964

18 CFR

284.....44529

21 CFR

14.....45900
172.....45300
510.....45900
522.....45901
558.....44931
Proposed Rules:
312.....44931

22 CFR

11.....46108
126.....44352

24 CFR

Proposed Rules:
1000.....44787

25 CFR

11.....44353
170.....44355

580 46109
Proposed Rules:
504 46134

26 CFR

1 45310
602 45310
Proposed Rules:
1 ....45414, 45683, 45933
31 ....44579, 45414
301 44579

27 CFR

Proposed Rules:
9 45437

28 CFR

Proposed Rules:
549 46136

29 CFR

1904 44037
1915 44533
Proposed Rules:
1904 44124

30 CFR

250 ....44265, 44357

31 CFR

103 44048

32 CFR

199 45311

33 CFR

100 ....44547, 44548, 44550, 44551, 45313, 45633
117 ....44553, 45059
165 ....44057, 44059, 44360, 44362, 44364, 44367, 44555, 44557, 44558, 44562, 44564, 44566, 45060, 45313, 45902, 45903, 45905, 45907
Proposed Rules:
110 45071
117 44582
165 45945

34 CFR

200 45038

36 CFR

1201 44757
1275 44765
Proposed Rules:
1254 45683

37 CFR

261 45240

39 CFR

111 45061

40 CFR

52 ....44061, 44062, 44065, 44369, 45064, 45066, 45909, 45914
63 ....44371, 44766, 45588, 45886
81 ....44769, 45635, 45637
180 ....45639, 45643, 45650
228 44770
258 45948
271 44069
302 45314
Proposed Rules:
52 ....44127, 44128, 44410, 45073, 45074, 45684, 45947
60 45684
63 ....44672, 44713, 46028, 46258
81 ....44128, 45688
258 45948
261 46139
302 45440

42 CFR

412 44073
413 44073

44 CFR

64 44077
65 45656
67 ....45658, 45665
Proposed Rules:
67 ....45689, 45691

45 CFR

0 45357
2510 45357
2520 45357
2521 45357
2522 45357
2524 45357
2525 45357
2526 45357
2528 45357
2550 45357

46 CFR

540 44774

47 CFR

0 46112
1 ....45362, 46298
2 45380
15 45666
18 45666
21 45362
22 45362
24 45362
25 45362
27 ....45362, 45380
36 44079
43 45387
63 45387
73 ....44777, 45362, 45380
74 45362
80 45362
90 45362
95 45362
100 45362
101 45362
Proposed Rules:
73 ....44790, 44791, 44792, 46148

48 CFR

1842 44777
204 46112
252 46123
253 46112

49 CFR

172 46123
174 46123
175 46123
176 46123
177 46123
501 44083
541 44085
571 45440
573 45822
574 45822
576 45822
579 45822
659 44091
Proposed Rules:
571 ....44416, 46149

50 CFR

17 ....44372, 44382, 44502
229 44092
300 44778
600 44778
622 44569
635 45393
648 ....44392, 44570, 45401
660 44778
679 ....44093, 45069, 45671, 45673, 45920, 45921, 46024
Proposed Rules:
17 ....44934, 45696
216 44132
223 44133
224 44133
600 ....45444, 45445, 45697
648 ....44139, 44792, 45447
660 45952
679 44794
697 45445

REMINDERS

The items in this list were editorially compiled as an aid to Federal Register users. Inclusion or exclusion from this list has no legal significance.

RULES GOING INTO EFFECT JULY 12, 2002

ENVIRONMENTAL PROTECTION AGENCY

Air pollutants, hazardous; national emission standards:
- Generic Maximum Achievable Control Technology—
  - Cyanide chemicals, carbon black, ethylene, and spandex; published 7-12-02

Air programs:
- Acid Rain and Nitrogen Oxides Budget Trading Programs; definitions and continuous emission monitoring provisions; revisions; published 6-12-02

Air quality implementation plans; approval and promulgation; various States:
- Minnesota; published 5-13-02

Hazardous waste:
- Land disposal restrictions—
  - Chemical Waste Management, Inc., Kettleman City, CA; treatment variance; published 5-28-02

TRANSPORTATION DEPARTMENT

Federal Aviation Administration

Airworthiness directives:
- Air Tractor, Inc.; published 5-31-02
- Teledyne Continental Motors; published 6-27-02

TRANSPORTATION DEPARTMENT

Federal Highway Administration

Payment procedures:
- Engineering and design related services contracts; administration; published 6-12-02

COMMENTS DUE NEXT WEEK

AGRICULTURE DEPARTMENT

Agricultural Marketing Service

Dates (domestic) produced or packed in—
- California; comments due by 7-15-02; published 6-14-02 [FR 02-15058]

AGRICULTURE DEPARTMENT

Animal and Plant Health Inspection Service

Hawaiian and territorial quarantine notices:
- Gardenia blooms from Hawaii; interstate movement; comments due by 7-15-02; published 5-15-02 [FR 02-12135]

Plant-related quarantine, domestic:
- Oriental fruit fly; comments due by 7-15-02; published 5-15-02 [FR 02-12136]
- Pink bollworm; Oklahoma removed from quarantined States regulated area lists; comments due by 7-15-02; published 5-16-02 [FR 02-12250]

Viruses, serums, toxins, etc.:
- Equine influenza vaccine, killed virus; comments due by 7-15-02; published 5-15-02 [FR 02-12134]

COMMERCE DEPARTMENT

National Oceanic and Atmospheric Administration

Fishery conservation and management:
- Alaska; fisheries of Exclusive Economic Zone—
  - Gulf of Alaska groundfish; comments due by 7-15-02; published 5-14-02 [FR 02-12033]
- Northeastern United States fisheries—
  - Northeast multispecies; comments due by 7-16-02; published 7-1-02 [FR 02-16266]

CONSUMER PRODUCT SAFETY COMMISSION

Upholstered furniture flammability; regulatory options; meeting; comments due by 7-18-02; published 3-20-02 [FR 02-06633]

DEFENSE DEPARTMENT

Federal Acquisition Regulation (FAR):
- Training and education cost principle; comments due by 7-15-02; published 5-15-02 [FR 02-12079]

ENVIRONMENTAL PROTECTION AGENCY

Air pollutants, hazardous; national emission standards:
- Engine test cells/stands; comments due by 7-15-02; published 5-14-02 [FR 02-11296]
- Secondary aluminum production; comments due by 7-15-02; published 6-14-02 [FR 02-14625]

Air programs:
- New marine compression-ignition engines at or above 30 liters/cyclinder; air pollution emissions control; comments due by 7-16-02; published 5-29-02 [FR 02-11736]

Air quality implementation plans; approval and promulgation; various States:
- California; comments due by 7-15-02; published 6-14-02 [FR 02-14511]

Civil monetary penalties; inflation adjustment; comments due by 7-18-02; published 6-18-02 [FR 02-15190]

Hazardous waste program authorizations:
- Oregon; comments due by 7-17-02; published 6-17-02 [FR 02-14760]

FEDERAL COMMUNICATIONS COMMISSION

Common carrier services:
- Satellite communications—
  - Orbital debris mitigation; comments due by 7-17-02; published 5-3-02 [FR 02-10995]
- Wireless telecommunications services—
  - Multipoint distribution service and instructional television fixed service; rulemaking petition; comments due by 7-16-02; published 5-17-02 [FR 02-12429]
  - Multipoint distribution service and instructional television fixed service; rulemaking petition; correction; comments due by 7-16-02; published 5-24-02 [FR C2-12429]

Digital television stations; table of assignments:
- Montana; comments due by 7-15-02; published 5-31-02 [FR 02-13646]

Radio stations; table of assignments:
- California; comments due by 7-15-02; published 6-11-02 [FR 02-14675]
- Colorado; comments due by 7-15-02; published 6-11-02 [FR 02-14673]
- Various States; comments due by 7-15-02; published 6-18-02 [FR 02-15213]

FEDERAL DEPOSIT INSURANCE CORPORATION

Conflict of interests:
- Agency contractors; integrity and fitness; minimum standards; comments due by 7-15-02; published 5-15-02 [FR 02-12020]

GENERAL SERVICES ADMINISTRATION

Federal Acquisition Regulation (FAR):
- Training and education cost principle; comments due by 7-15-02; published 5-15-02 [FR 02-12079]

Federal Management Regulation:
- Internet GOV Domain; comments due by 7-15-02; published 5-16-02 [FR 02-12127]

INTERIOR DEPARTMENT

Fish and Wildlife Service

Endangered and threatened species:
- Critical habitat designations—
  - Roswell springsnail, Koster's tyronia, etc.; comments due by 7-14-02; published 5-31-02 [FR 02-13534]
  - Various plants from Northwestern Hawaiian Islands, HI; comments due by 7-15-02; published 5-14-02 [FR 02-11225]

INTERIOR DEPARTMENT

Surface Mining Reclamation and Enforcement Office

Permanent program and abandoned mine land reclamation plan submissions:
- Kentucky; comments due by 7-19-02; published 6-19-02 [FR 02-15484]
- Wyoming; comments due by 7-19-02; published 6-19-02 [FR 02-15485]

Surface coal mining and reclamation operations:
- Bonding and other financial assurance mechanisms for treatment of long-term pollutional discharges and acid/toxic mine drainage related issues; comments due by 7-16-02; published 5-17-02 [FR 02-12462]

JUSTICE DEPARTMENT

Immigration and Naturalization Service

Nonimmigrant classes:
- Aliens—
  - Special registration requirements; comments due by 7-15-02; published 6-13-02 [FR 02-15037]

JUSTICE DEPARTMENT

Security risk assessments:

Aviation Transportation and Security Act—
Aviation training for aliens and other designated individuals; flight training screening; comments due by 7-15-02; published 6-14-02 [FR 02-15060]
Aviation training for aliens and other designated individuals; flight training screening; comments due by 7-15-02; published 6-14-02 [FR 02-15061]

NATIONAL AERONAUTICS AND SPACE ADMINISTRATION

Federal Acquisition Regulation (FAR):
Training and education cost principle; comments due by 7-15-02; published 5-15-02 [FR 02-12079]

SECURITIES AND EXCHANGE COMMISSION

Investment companies:
Transactions with portfolio and subadvisory affiliates; comments due by 7-19-02; published 5-8-02 [FR 02-11228]
Securities:
Management's discussion and analysis about application of critical accounting policies; disclosure; comments due by 7-19-02; published 5-20-02 [FR 02-12259]

TRANSPORTATION DEPARTMENT

Federal Aviation Administration

Aircraft products and parts; certification procedures:
Registration requirements; court of competent jurisdiction; comments due by 7-17-02; published 6-17-02 [FR 02-15195]
Airworthiness directives:
Boeing; comments due by 7-15-02; published 5-29-02 [FR 02-12949]
Bombardier; comments due by 7-18-02; published 6-18-02 [FR 02-15243]
Eurocopter France; comments due by 7-15-02; published 5-16-02 [FR 02-12052]
General Electric Co.; comments due by 7-15-02; published 5-16-02 [FR 02-12050]
Airworthiness standards:
Special conditions—
Israel Aircraft Industries, Ltd. model 1124/1124A airplanes; comments due by 7-17-02; published 6-17-02 [FR 02-15196]
Learjet Model 35, 36, 35A, and 36A series airplanes; comments due by 7-15-02; published 6-13-02 [FR 02-14979]
Class E airspace; comments due by 7-15-02; published 5-20-02 [FR 02-12609]

TRANSPORTATION DEPARTMENT

Transportation Security Administration

Private charter passenger aircraft; security rules; comments due by 7-19-02; published 6-19-02 [FR 02-15490]

TREASURY DEPARTMENT

Foreign Assets Control Office

Reporting and procedures regulations:
Civil penalties information; disclosure; comments due by 7-19-02; published 6-19-02 [FR 02-15377]

TREASURY DEPARTMENT

Internal Revenue Service

Income taxes:
Retirement plans; required distributions; cross-reference; comments due by 7-16-02; published 4-17-02 [FR 02-08964]
Tax-exempt bonds issued by State and local governments; arbitrage and private activity restrictions; investment-type property and private loan (prepayment); comments due by 7-16-02; published 4-17-02 [FR 02-09356]
Procedure and administration:
Levy restrictions during installment agreements; comments due by 7-16-02; published 4-17-02 [FR 02-09237]

VETERANS AFFAIRS DEPARTMENT

National cemeteries:
Eligibility for burial of adult children, minor children, and certain Filipino veterans; comments due by 7-15-02; published 5-16-02 [FR 02-12210]

LIST OF PUBLIC LAWS

This is a continuing list of public bills from the current session of Congress which have become Federal laws. It may be used in conjunction with ''P L U S'' (Public Laws Update Service) on 202–523–6641. This list is also available online at *http://www.nara.gov/fedreg/plawcurr.html*.

The text of laws is not published in the **Federal Register** but may be ordered in ''slip law'' (individual pamphlet) form from the Superintendent of Documents, U.S. Government Printing Office, Washington, DC 20402 (phone, 202–512–1808). The text will also be made available on the Internet from GPO Access at *http://www.access.gpo.gov/nara/nara005.html*. Some laws may not yet be available.

H.R. 327/P.L. 107–198

Small Business Paperwork Relief Act of 2002 (June 28, 2002; 116 Stat. 729)

S. 2578/P.L. 107–199

To amend title 31 of the United States Code to increase the public debt limit. (June 28, 2002; 116 Stat. 734)

Last List June 26, 2002

Public Laws Electronic Notification Service (PENS)

PENS is a free electronic mail notification service of newly enacted public laws. To subscribe, go to *http://hydra.gsa.gov/archives/publaws-l.html* or send E-mail to **listserv@listserv.gsa.gov** with the following text message:

SUBSCRIBE PUBLAWS-L Your Name.

Note: This service is strictly for E-mail notification of new laws. The text of laws is not available through this service. **PENS** cannot respond to specific inquiries sent to this address.