AUTHENTICATED
U.S. GOVERNMENT
INFORMATION
GPO

Federal Register

1–15–09 Thursday
Vol. 74 No. 10 Jan. 15, 2009

Pages 2293–2756

The **FEDERAL REGISTER** (ISSN 0097–6326) is published daily, Monday through Friday, except official holidays, by the Office of the Federal Register, National Archives and Records Administration, Washington, DC 20408, under the Federal Register Act (44 U.S.C. Ch. 15) and the regulations of the Administrative Committee of the Federal Register (1 CFR Ch. I). The Superintendent of Documents, U.S. Government Printing Office, Washington, DC 20402 is the exclusive distributor of the official edition. Periodicals postage is paid at Washington, DC.

The **FEDERAL REGISTER** provides a uniform system for making available to the public regulations and legal notices issued by Federal agencies. These include Presidential proclamations and Executive Orders, Federal agency documents having general applicability and legal effect, documents required to be published by act of Congress, and other Federal agency documents of public interest.

Documents are on file for public inspection in the Office of the Federal Register the day before they are published, unless the issuing agency requests earlier filing. For a list of documents currently on file for public inspection, see *www.federalregister.gov.*

The seal of the National Archives and Records Administration authenticates the Federal Register as the official serial publication established under the Federal Register Act. Under 44 U.S.C. 1507, the contents of the **Federal Register** shall be judicially noticed.

The **Federal Register** is published in paper and on 24x microfiche. It is also available online at no charge as one of the databases on GPO Access, a service of the U.S. Government Printing Office.

The online edition of the **Federal Register** *www.gpoaccess.gov/nara,* available through GPO Access, is issued under the authority of the Administrative Committee of the Federal Register as the official legal equivalent of the paper and microfiche editions (44 U.S.C. 4101 and 1 CFR 5.10). It is updated by 6 a.m. each day the **Federal Register** is published and includes both text and graphics from Volume 59, Number 1 (January 2, 1994) forward.

For more information about GPO Access, contact the GPO Access User Support Team, call toll free 1-888-293-6498; DC area 202-512-1530; fax at 202-512-1262; or via e-mail at *gpoaccess@gpo.gov.* The Support Team is available between 7:00 a.m. and 9:00 p.m. Eastern Time, Monday–Friday, except official holidays.

The annual subscription price for the **Federal Register** paper edition is $749 plus postage, or $808, plus postage, for a combined **Federal Register, Federal Register** Index and List of CFR Sections Affected (LSA) subscription; the microfiche edition of the **Federal Register** including the **Federal Register** Index and LSA is $165, plus postage. Six month subscriptions are available for one-half the annual rate. The prevailing postal rates will be applied to orders according to the delivery method requested. The price of a single copy of the daily **Federal Register,** including postage, is based on the number of pages: $11 for an issue containing less than 200 pages; $22 for an issue containing 200 to 400 pages; and $33 for an issue containing more than 400 pages. Single issues of the microfiche edition may be purchased for $3 per copy, including postage. Remit check or money order, made payable to the Superintendent of Documents, or charge to your GPO Deposit Account, VISA, MasterCard, American Express, or Discover. Mail to: U.S. Government Printing Office—New Orders, P.O. Box 979050, St. Louis, MO 63197-9000; or call toll free 1-866-512-1800, DC area 202-512-1800; or go to the U.S. Government Online Bookstore site, see *bookstore.gpo.gov.*

There are no restrictions on the republication of material appearing in the **Federal Register.**

How To Cite This Publication: Use the volume number and the page number. Example: 74 FR 12345.

Postmaster: Send address changes to the Superintendent of Documents, Federal Register, U.S. Government Printing Office, Washington, DC 20402, along with the entire mailing label from the last issue received.

SUBSCRIPTIONS AND COPIES

PUBLIC

Subscriptions:

Paper or fiche	**202–512–1800**
Assistance with public subscriptions	**202–512–1806**

General online information **202–512–1530; 1–888–293–6498**

Single copies/back copies:

Paper or fiche	**202–512–1800**
Assistance with public single copies	**1–866–512–1800 (Toll-Free)**

FEDERAL AGENCIES

Subscriptions:

Paper or fiche	**202–741–6005**
Assistance with Federal agency subscriptions	**202–741–6005**

FEDERAL REGISTER WORKSHOP

THE FEDERAL REGISTER: WHAT IT IS AND HOW TO USE IT

FOR: Any person who uses the Federal Register and Code of Federal Regulations.

WHO: Sponsored by the Office of the Federal Register.

WHAT: Free public briefings (approximately 3 hours) to present:

1. The regulatory process, with a focus on the Federal Register system and the public's role in the development of regulations.

2. The relationship between the Federal Register and Code of Federal Regulations.

3. The important elements of typical Federal Register documents.

4. An introduction to the finding aids of the FR/CFR system.

WHY: To provide the public with access to information necessary to research Federal agency regulations which directly affect them. There will be no discussion of specific agency regulations.

WHEN: Tuesday, January 27, 2009
9:00 a.m.–12:30 p.m.

WHERE: Office of the Federal Register
Conference Room, Suite 700
800 North Capitol Street, NW.
Washington, DC 20002

RESERVATIONS: (202) 741–6008

Printed on recycled paper.

Contents

Federal Register

Vol. 74, No. 10

Thursday, January 15, 2009

Agency for Healthcare Research and Quality
NOTICES
Agency Information Collection Activities; Proposals, Submissions, and Approvals, 2596–2598

Agricultural Marketing Service
RULES
Mandatory Country of Origin Labeling of Beef, Pork, Lamb, Chicken, Goat Meat, Wild and Farm-raised Fish and Shellfish, etc., 2658–2707

Agriculture Department
See Agricultural Marketing Service
See Commodity Credit Corporation
See Food and Nutrition Service
See Rural Utilities Service
NOTICES
Agency Information Collection Activities; Proposals, Submissions, and Approvals, 2508

Alcohol, Tobacco, Firearms, and Explosives Bureau
NOTICES
Agency Information Collection Activities; Proposals, Submissions, and Approvals, 2617–2618

Coast Guard
RULES
Security Zones:
Steam Generator Transit, Captain of the Port Zone San Diego; San Diego, CA, 2373–2376

Commerce Department
See Industry and Security Bureau
See International Trade Administration
See National Oceanic and Atmospheric Administration

Commodity Credit Corporation
RULES
Environmental Quality Incentives Program, 2293–2317
Wetlands Reserve Program, 2317–2337

Consumer Product Safety Commission
PROPOSED RULES
Children's Products Containing Lead:
Exemptions for Certain Electronic Devices, 2435–2439
Interpretative Rule on Inaccessible Component Parts, 2439–2443
Proposed Determinations Regarding Lead Content Limits on Certain Materials or Products, 2433–2435
Proposed Procedures and Requirements for a Commission Determination or Exclusion, 2428–2433

Defense Acquisition Regulations System
RULES
Defense Federal Acquisition Regulation Supplement:
Clean Air Act and Clean Water Act Exemptions, 2414
Contract Actions Supporting Contingency Operations or Facilitating Defense Against or Recovery from Nuclear, Biological, Chemical, or Radiological Attack, 2407
Delegation of Authority for Single Award Task or Delivery Order Contracts, 2416–2417
DoD Law of War Program, 2418–2421
List of Firms Owned or Controlled by the Government of a Terrorist Country, 2413
Pilot Program for Transition to Follow-On Contracting After Use of Other Transaction Authority, 2415–2416
Removal of North Korea from the List of Terrorist Countries, 2421–2422
Responsible Prospective Contractors, 2414–2415
Security–Guard Functions, 2421
Senior DoD Officials Seeking Employment with Defense Contractors, 2408–2410
Separation of Senior Roles in Source Selection, 2407–2408
Statutory Waiver for Commercially Available Off–the–Shelf Items, 2422–2424
Steel for Military Construction Projects, 2417–2418
U.S.–International Atomic Energy Agency Additional Protocol, 2411–2413
Whistleblower Protections for Contractor Employees, 2410–2411

Defense Department
See Defense Acquisition Regulations System
See Defense Acquisition Regulations System
See Navy Department
RULES
Federal Acquisition Regulation:
FAR Case 2000–305, Commercially Available Off–the–Shelf (COTS) Items, 2713–2724
FAR Case 2001–004, Exemption of Certain Service Contracts from the Service Contract Act (SCA), 2724–2731
FAR Case 2004038, Federal Procurement Data System (FPDS), 2712–2713
FAR Case 2005–012, Combating Trafficking in Persons, 2741–2745
FAR Case 2006–023, SAFETY Act: Implementation of DHS Regulations, 2733–2739
FAR Case 2006–030, Electronic Products Environmental Assessment Tool (EPEAT), 2740–2741
FAR Case 2007–016, Trade Agreements–New Thresholds, 2745–2746
FAR Case 2008–003, Public Disclosure of Justification and Approval Documents for Noncompetitive Contracts–Section 844 of the National Defense Authorization Act for Fiscal Year 2008, 2731–2733
Federal Acquisition Circular 200530; Introduction, 2710–2711
Federal Acquisition Circular 2005–30; Small Entity Compliance Guide, 2746–2748
Federal Acquisition Regulation: Technical Amendment, 2746

Defense
See Defense Department

Drug Enforcement Administration
NOTICES
Controlled Substances Importer; Registrations, 2618–2619
Controlled Substances Manufacturer; Registrations, 2619–2620

Education Department
NOTICES
Agency Information Collection Activities; Proposals, Submissions, and Approvals, 2517–2518
Federal Family Education Loan Program (FFELP), 2518–2564
Proposed Long-Range Plans (Fiscal Years 2010–2014), 2564–2569
State Charter School Facilities Incentive Grants Program:
Inviting Applications for New Awards for Fiscal Year (FY) 2009; Overview Information, 2569–2573
Women's Educational Equity Act Program:
Inviting Applications for New Awards for Fiscal Year (FY) 2009; Correction, 2573

Employee Benefits Security Administration
RULES
Civil Penalties Under ERISA Section 502(c)(4); Correction, 2373

Employment and Training Administration
NOTICES
Advancing Registered Apprenticeship into the 21st Century:
Collaborating For Success; Solicitation for Grant Applications, 2620–2632
Affirmative Determination Regarding Application for Reconsideration:
American Multimedia, Inc., Burlington, NC, 2632
Prime Tanning Co., Inc., Berwick, ME, 2632
Amended Certification Regarding Eligibility to Apply for Worker Adjustment Assistance and Alternative Trade Adjustment Assistance:
American Axle & Manufacturing, Detroit Manufacturing Complex, Detroit, MI, 2633
Negative Determination on Reconsideration:
IAC Canton, Inc., a Subsidiary of International Automotive Components Group, North America, Inc., Canton, OH, 2633
Public Briefings on Using Redesigned Labor Certification Forms and Stakeholder Meeting, 2634
Revised Determination on Reopening:
Trilogy Finishing, Inc. in Detroit, MI, 2634–2635
Solicitation for Grant Applications (SGA) [SGA/DFA–PY–08–09], 2635

Energy Department
See Federal Energy Regulatory Commission

Environmental Protection Agency
RULES
Approval and Promulgation of Air Quality Implementation Plans:
Arkansas; Emissions Inventory for the Crittenden County Ozone Non-attainment Area; Emissions Statements, 2383–2387
Texas; Approval of the Section 110(a)(1) Maintenance Plan for the 1997 8-Hour Ozone Standard for El Paso County, 2387–2392
Finding of Failure to Submit State Implementation Plans Required by the 1999 Regional Haze Rule, 2392–2395
Prevention of Significant Deterioration (PSD) and Nonattainment New Source Review (NSR):
Aggregation and Project Netting, 2376–2383
PROPOSED RULES
Approval and Promulgation of Air Quality Implementation Plans:
Arkansas; Emissions Inventory for the Crittenden County Ozone Nonattainment Area; Emissions Statements, 2460–2461
Texas; Approval of the Section 110(a)(1) Maintenance Plan for the 1997 8–Hour Ozone Standard for El Paso County, 2460
Oil Pollution Prevention:
Spill Prevention, Control, and Countermeasure Rule Requirements; Amendments, 2461–2465
Prevention of Significant Deterioration (PSD) and Nonattainment New Source Review (NSR):
Debottlenecking, 2460

Executive Office for Immigration Review
RULES
Reorganization of Regulations on Control of Employment of Aliens, 2337–2340

Executive Office of the President
See Management and Budget Office
See Presidential Documents

Farm Credit Administration
RULES
Rules of Practice and Procedure:
Adjusting Civil Money Penalties for Inflation, 2340–2342

Federal Aviation Administration
RULES
Class E Airspace; Modification:
Alamosa, CO, 2350–2351
Use of Additional Portable Oxygen Concentrator Devices On Board Aircraft, 2351–2355
PROPOSED RULES
Airworthiness Directives:
Piper Aircraft, Inc. Models PA 46 350P and PA 46R 350T Airplanes, 2425–2427
Proposed Modification of the Atlantic High and San Juan Low Offshore Airspace Areas; East Coast, United States, 2427–2428
NOTICES
Noise Exposure Map and Noise Compatibility Program:
General Mitchell International Airport, Milwaukee, WI, 2645–2646
Operating Limitations at New York Laguardia Airport; Order, 2646–2648
Petition for Exemption; Summary of Petition Received, 2648

Federal Communications Commission
RULES
Digital Television Distributed Transmission System Technologies:
Announcement of Effective Date, 2405–2406
NOTICES
Agency Information Collection Activities; Proposals, Submissions, and Approvals, 2586–2590

Federal Energy Regulatory Commission
PROPOSED RULES
Contract Reporting Requirements of Intrastate Natural Gas Companies, 2443
NOTICES
Agency Information Collection Activities; Proposals, Submissions, and Approvals, 2573–2574

Applications:
Alaska Village Electric Cooperative, 2574–2575
Borough of High Bridge, NJ, 2575–2576
BPUS Generation Development LLC, 2576
Granite County, 2576–2577
Greenwood County, SC, 2577–2578
Rockhouse Mountain Energy, LLC, 2578
Spaur Ranch, 2578–2579
Combined Notice of Filings, 2579–2580
Commission Staff Attendance at Midwest ISO Meetings, 2580–2583
Environmental Impact Statements; Intent, etc.:
Idaho Power Co., 2583–2584
FERC Staff Attendance at Southwest Power Pool Independent Coordinator of Transmission (ICT) Stakeholder Policy Committee Meeting:
Louisiana Public Service Commission v. Entergy Services, Inc., et al., 2584–2585
Filings:
Miller, Forrest E., 2585
Meetings:
FERC Staff Attendance; Southwest Power Pool Board of Directors/Members Committee and Southwest Power Pool Regional State Committee, 2585
Petition for Rate Approval:
Michigan Consolidated Gas Co., 2585–2586

Federal Highway Administration
NOTICES
Emergency Temporary Closure of I–395 & I–66 in the Commonwealth of Virginia, 2648–2650

Federal Housing Enterprise Oversight Office
RULES
Flood Insurance, 2347–2350

Federal Housing Financing Agency
RULES
Flood Insurance, 2347–2350
Freedom of Information Act, 2342–2347

Federal Maritime Commission
NOTICES
Ocean Transportation Intermediary License; Reissuances, 2590–2591
Ocean Transportation Intermediary License; Revocations, 2591–2592

Federal Motor Carrier Safety Administration
NOTICES
Meetings; Sunshine Act, 2650

Federal Reserve System
NOTICES
Formations of, Acquisitions by, and Mergers of Bank Holding Companies, 2592

Federal Trade Commission
NOTICES
Proposed Consent Agreements:
American Nationwide Mortgage Co., Inc.; Analysis of Proposed Consent Order to Aid Public Comment, 2592–2594
Michael Gendrolis dba Good Life Funding; Analysis of Proposed Consent Order to Aid Public Comment, 2594–2595

Fish and Wildlife Service
PROPOSED RULES
Endangered and Threatened Wildlife and Plants:
Status Review of the Bald Eagle (Haliaeetus leucocephalus) in the Sonoran Desert Area of Central Arizona and Northwestern Mexico, 2465–2467

Food and Drug Administration
RULES
Institutional Review Boards; Registration Requirements, 2358–2369
PROPOSED RULES
Milk and Cream Products and Yogurt Products:
Proposal to Revoke the Standards for Lowfat Yogurt and Nonfat Yogurt and to Amend the Standard for Yogurt, 2443–2460
NOTICES
Agency Information Collection Activities; Proposals, Submissions, and Approvals, 2598–2599
Guidance for Clinical Investigators, Sponsors, and Institutional Review Boards on Adverse Event Reporting—Improving Human Subject Protection; Availability, 2599–2600
Guidance for Industry:
Referral Program for the Food and Drug Administration to the National Oceanic and Atmospheric Administration Seafood Inspection Program, etc., 2600–2601
Public Workshop:
Unique Device Identification System, 2601–2605
Secure Supply Chain Pilot Program, 2605–2608

Food and Nutrition Service
NOTICES
Summer Food Service Program 2009 Reimbursement, 2508–2510

Foreign Claims Settlement Commission
NOTICES
Agency Information Collection Activities; Proposals, Submissions, and Approvals, 2620

General Services Administration
RULES
Federal Acquisition Regulation:
FAR Case 2000–305, Commercially Available Off-the-Shelf (COTS) Items, 2713–2724
FAR Case 2001–004, Exemption of Certain Service Contracts from the Service Contract Act (SCA), 2724–2731
FAR Case 2004038, Federal Procurement Data System (FPDS), 2712–2713
FAR Case 2005–012, Combating Trafficking in Persons, 2741–2745
FAR Case 2006–023, SAFETY Act: Implementation of DHS Regulations, 2733–2739
FAR Case 2006–030, Electronic Products Environmental Assessment Tool (EPEAT), 2740–2741
FAR Case 2007–016, Trade Agreements–New Thresholds, 2745–2746
FAR Case 2008–003, Public Disclosure of Justification and Approval Documents for Noncompetitive Contracts–Section 844 of the National Defense Authorization Act for Fiscal Year 2008, 2731–2733
Federal Acquisition Circular 200530; Introduction, 2710–2711
Federal Acquisition Circular 2005–30; Small Entity Compliance Guide, 2746–2748

Federal Acquisition Regulation: Technical Amendment, 2746
Federal Management Regulation:
FMR Case 2008–102–2, Utilization, Donation, and Disposal of Foreign Gifts and Decorations, 2395–2396
Federal Travel Regulation:
Fly America Act; United States and European Union ''Open Skies'' Air Transport Agreement (US–EU Open Skies Agreement), 2396–2397
Privately Owned Vehicle Mileage Reimbursement, 2397–2398

Health and Human Services Department
See Agency for Healthcare Research and Quality
See Food and Drug Administration
See Indian Health Service
See National Institutes of Health
RULES
Institutional Review Boards:
Registration Requirements, 2399–2405
NOTICES
Request for Information; Availability:
Potential Roles for HHS in Developing a Dynamic Environment to Encourage the Innovation and Diffusion of Medical Technologies that Enhance Health System Value, 2595–2596

Homeland Security Department
See Coast Guard
See U.S. Customs and Border Protection

Housing and Urban Development Department
See Federal Housing Enterprise Oversight Office
RULES
Civil Money Penalties:
Certain Prohibited Conduct, 2750–2752
Real Estate Settlement Procedures Act (RESPA):
Rule to Simplify and Improve the Process of Obtaining Mortgages, etc., 2369–2370

HSB
See U.S. Customs and Border Protection

Indian Health Service
NOTICES
Agency Information Collection Activities; Proposals, Submissions, and Approvals:
Background Investigations of Individuals in Positions involving Regular contact with or Control Over Indian Children; Correction, 2608
HIV Knowledge/Attitudes/Practice Customer Survey, 2608

Industry and Security Bureau
RULES
License Requirements Policy for Iran and for Certain Weapons of Mass Destruction Proliferators, 2355–2358

Interior Department
See Fish and Wildlife Service
See Land Management Bureau
See National Park Service
See Reclamation Bureau

Internal Revenue Service
RULES
Postponement of Certain Tax–related Deadlines by Reason of Federally Declared Disaster, etc., 2370–2373
NOTICES
Agency Information Collection Activities; Proposals, Submissions, and Approvals, 2650–2654
Open Season for Membership to the Electronic Tax Administration Advisory Committee (ETAAC), 2654–2655

International Trade Administration
NOTICES
Antidumping:
Polyethylene Retail Carrier Bags from Thailand, 2511–2512
Countervailing Duties:
Corrosion–Resistant Carbon Steel Flat Products from the Republic of Korea, 2512–2514

International Trade Commission
NOTICES
Investigations:
Frozen Fish Fillets from Vietnam, 2616–2617

Justice Department
See Alcohol, Tobacco, Firearms, and Explosives Bureau
See Drug Enforcement Administration
See Executive Office for Immigration Review
See Foreign Claims Settlement Commission
NOTICES
Consent Decree:
Citibank Global Market Holdings, Inc., 2617

Labor Department
See Employee Benefits Security Administration
See Employment and Training Administration

Land Management Bureau
NOTICES
Call for Nomination to Fill Vacancy on BLM Boise District Resource Advisory Council, 2610
Potential for Oil Shale Development, 2611–2612
Survey Plat Filings:
Nevada, 2610

Management and Budget Office
NOTICES
Federal Family Education Loan Program (FFELP), 2518–2564
FY 2008 Cost of Outpatient Medical, Dental, and Cosmetic Surgery Services Furnished by Department of Defense Medical Treatment Facilities:
Certain Rates Regarding Recovery From Tortiously Liable Third Persons, 2636

National Aeronautics and Space Administration
RULES
Federal Acquisition Regulation:
FAR Case 2000–305, Commercially Available Off–the–Shelf (COTS) Items, 2713–2724
FAR Case 2001–004, Exemption of Certain Service Contracts from the Service Contract Act (SCA), 2724–2731
FAR Case 2004038, Federal Procurement Data System (FPDS), 2712–2713
FAR Case 2005–012, Combating Trafficking in Persons, 2741–2745
FAR Case 2006–023, SAFETY Act: Implementation of DHS Regulations, 2733–2739
FAR Case 2006–030, Electronic Products Environmental Assessment Tool (EPEAT), 2740–2741

FAR Case 2007–016, Trade Agreements–New Thresholds, 2745–2746
FAR Case 2008–003, Public Disclosure of Justification and Approval Documents for Noncompetitive Contracts–Section 844 of the National Defense Authorization Act for Fiscal Year 2008, 2731–2733
Federal Acquisition Circular 200530; Introduction, 2710–2711
Federal Acquisition Circular 2005–30; Small Entity Compliance Guide, 2746–2748
Federal Acquisition Regulation: Technical Amendment, 2746

National Institutes of Health
NOTICES
Meetings:
National Institute of Allergy and Infectious Diseases Special Emphasis Panel, etc., 2609

National Nanotechnology Coordination Office
NOTICES
Meetings:
Human and Environmental Exposure Assessment Workshop, 2635–2636

National Oceanic and Atmospheric Administration
PROPOSED RULES
Interjurisdictional Fisheries Act; Disaster Assistance Programs; Fisheries Assistance Programs, 2467–2478
Magnuson–Stevens Fishery Conservation and Management Act Provisions:
Fisheries of the Northeastern United States, 2478–2507

National Park Service
NOTICES
Environmental Impact Statements; Intent, etc.:
Big Thicket National Preserve, TX, 2614

Navy Department
NOTICES
Environmental Impact Statements; Intent:
Basing the U.S. Marine Corps Joint Strike Fighter F–35B on the East Coast, 2514–2515
Basing the U.S. Marine Corps Joint Strike Fighter F–35B on the West Coast, 2515–2516
Meetings:
Secretary of the Navy Advisory Panel, 2516–2517

Office of Federal Housing Enterprise Oversight
See Federal Housing Enterprise Oversight Office

Office of Management and Budget
See Management and Budget Office

Postal Regulatory Commission
NOTICES
Review of Nonpostal Services, 2636–2637

Postal Service
NOTICES
Meetings; Sunshine Act, 2638

Presidential Documents
PROCLAMATIONS
Special observances:
Religious Freedom Day (Proc. 8338), 2753–2756

Public Health Service
See Agency for Healthcare Research and Quality
See Food and Drug Administration
See Indian Health Service
See National Institutes of Health

Reclamation Bureau
NOTICES
Environmental Impact Statements; Availability, etc.:
Grassland Bypass Project, 2010–2019, Fresno and Merced Counties, CA, 2615–2616

Rural Utilities Service
NOTICES
Environmental Assessment; Intent, etc.:
Fitzgerald Renewable Energy, LLC, 2510

Securities and Exchange Commission
See Securities and Exchange Commission
NOTICES
Meetings; Sunshine Act, 2638
Order of Suspension of Trading:
JPM Co., and Tidalwave Holdings, Inc., 2638
Self–Regulatory Organizations; Proposed Rule Changes:
Chicago Board Options Exchange, Inc., 2638–2640
The NASDAQ Stock Market LLC, 2640–2641

Social Security Administration
NOTICES
Agency Information Collection Activities; Proposals, Submissions, and Approvals, 2642–2644

State Department
RULES
Visas:
Documentation of Immigrants under the Immigration and Nationality Act, as Amended; Electronic Petition for Diversity Immigrant Status, 2369
NOTICES
Culturally Significant Objects Imported for Exhibition Determinations:
Genghis Khan, 2644
The El Peru–Waka Archaeological Project, 2644
Wine, Worship and Sacrifice; The Golden Graves of Ancient Vani, 2644–2645

Transportation Department
See Federal Aviation Administration
See Federal Highway Administration
See Federal Motor Carrier Safety Administration

Treasury Department
See Internal Revenue Service
NOTICES
Call for Redemption of 13–1/4 Percent Treasury Bonds of 2009–14, 2650
Federal Family Education Loan Program (FFELP), 2518–2564

U.S. Customs and Border Protection
NOTICES
Agency Information Collection Activities; Proposals, Submissions, and Approvals, 2609–2610

Veterans Affairs Department
NOTICES
Computer Matching Program Between the Department of Veterans Affairs (VA) and the Department of Defense (DoD), 2655–2656

Separate Parts In This Issue

Part II
Agriculture Department, Agricultural Marketing Service, 2658–2707

Part III
Defense Department, 2710–2748
General Services Administration, 2710–2748
National Aeronautics and Space Administration, 2710–2748

Part IV
Housing and Urban Development Department, 2750–2752

Part V
Presidential Documents, 2753–2756

Reader Aids

Consult the Reader Aids section at the end of this page for phone numbers, online resources, finding aids, reminders, and notice of recently enacted public laws.

To subscribe to the Federal Register Table of Contents LISTSERV electronic mailing list, go to http://listserv.access.gpo.gov and select Online mailing list archives, FEDREGTOC-L, Join or leave the list (or change settings); then follow the instructions.

CFR PARTS AFFECTED IN THIS ISSUE

A cumulative list of the parts affected this month can be found in the Reader Aids section at the end of this issue.

7 CFR
60 2658
65 2658
1466 2293
1467 2317

8 CFR
1274a 2337

12 CFR
622 2340
1202 2342
1250 2347
1773 2347

14 CFR
71 2350
121 2351

Proposed Rules:
39 2425
71 2427

15 CFR
742 2355
744 2355
746 2355

16 CFR

Proposed Rules:
1500 (4 documents) 2428, 2433, 2435, 2439

18 CFR

Proposed Rules:
284 2443

21 CFR
56 2358

Proposed Rules:
131 2443

22 CFR
42 2369

24 CFR
30 2750
203 2369
3500 2369

26 CFR
301 2370

29 CFR
2560 2373

33 CFR
165 2373

40 CFR
51 2376
52 (4 documents) ...2376, 2383, 2387, 2392

Proposed Rules:
51 2460
52 (3 documents) 2460
112 2461

41 CFR
102-42 2395
301-10 (2 documents) 2396, 2397

45 CFR
46 2399

47 CFR
73 2405

48 CFR
Ch. 1 (2 documents) 2710, 2746
1 (2 documents) 2712, 2733
2 (2 documents) 2712, 2713
3 2713
4 (2 documents) 2712, 2724
5 2731
6 2731
7 2733
11 2740
12 (3 documents) ...2712, 2713, 2741
15 (2 documents) 2724, 2746
17 2724
18 2733
22 (3 documents) ...2724, 2741, 2745
23 (2 documents) 2713, 2740
24 2731
25 (2 documents) 2713, 2745
28 2733
32 2733
33 2733
39 2740
43 2733
50 2733
52 (7 documents) ...2712, 2713, 2724, 2733, 2740, 2741, 2745
202 2407
203 (3 documents) 2407, 2408, 2410
204 2411
209 (4 documents) 2408, 2413, 2414
212 2415
216 2416
218 2407
225 (2 documents) 2417, 2418,
236 2417
237 2421
252 (7 documents) 2408, 2410, 2411, 2417, 2418, 2421, 2422

50 CFR

Proposed Rules:
17 2465
253 2467
600 2467
648 2478

Rules and Regulations

Federal Register
Vol. 74, No. 10
Thursday, January 15, 2009

This section of the FEDERAL REGISTER contains regulatory documents having general applicability and legal effect, most of which are keyed to and codified in the Code of Federal Regulations, which is published under 50 titles pursuant to 44 U.S.C. 1510.

The Code of Federal Regulations is sold by the Superintendent of Documents. Prices of new books are listed in the first FEDERAL REGISTER issue of each week.

DEPARTMENT OF AGRICULTURE

Commodity Credit Corporation

7 CFR Part 1466

RIN 0578–AA45

Environmental Quality Incentives Program

AGENCY: Natural Resources Conservation Service and Commodity Credit Corporation, United States Department of Agriculture.

ACTION: Interim final rule with request for comment.

SUMMARY: This interim final rule with request for comment amends the existing Environmental Quality Incentives Program (EQIP) regulations to incorporate programmatic changes as authorized by amendments in the Food, Conservation, and Energy Act of 2008 (2008 Act).

DATES: *Effective Date:* This rule is effective January 15, 2009.

Comment date: Submit comments on or before March 16, 2009.

ADDRESSES: You may send comments (identified by Docket Number NRCS–IFR–08005), which will be available to the public in their entirety, using any of the following methods:

Government-wide rulemaking Web site: Go to *http://regulations.gov* and follow the instructions for sending comments electronically.

Mail: Financial Assistance Programs Division, U.S. Department of Agriculture, Natural Resources Conservation Service, 1400 Independence Avenue, SW., Room 5237S, Washington, DC 20250–2890.

Fax: (202) 720–4265.

Hand Delivery Room: Room 5237S of the USDA South Office Building, 1400 Independence Avenue, SW., Room 5237, Washington, DC 20250, between 9 a.m. and 4 p.m., Monday through Friday, except Federal Holidays.

This interim final rule may be accessed via Internet. Users can access the NRCS homepage at *http://www.nrcs.usda.gov/*; select the *Farm Bill* link from the menu; select the *Interim final* link from beneath the *Final and Interim Final Rules Index* title. Persons with disabilities who require alternative means for communication (Braille, large print, audio tape, etc.) should contact the USDA TARGET Center at: (202) 720–2600 (voice and TDD).

To view public comments, please ask the guard at the entrance to the South Office Building to call 202–720–4527 in order to be escorted into the building.

FOR FURTHER INFORMATION CONTACT: Greg Johnson, Director, Financial Assistance Programs Division, U.S. Department of Agriculture, Natural Resources Conservation Service, Room 5237, P.O. Box 2890, Washington, DC 20013–2890. Phone: (202) 720–1845. Fax: (202) 720–4265.

SUPPLEMENTARY INFORMATION:

Regulatory Certifications

Executive Order 12866

Pursuant to Executive Order 12866 (FR Doc. 93–24523, September 30, 1993), this interim final rule with request for comment is an economically significant regulatory action, since it results in an annual effect on the economy of $100 million or more. The administrative record is available for public inspection in Room 5831 South Building, USDA, 14th and Independence Avenue, SW., Washington, DC. Pursuant to Executive Order 12866, NRCS conducted an economic analysis of the potential impacts associated with this program. A summary of the economic analysis can be found at the end of this preamble and a copy of the analysis is available upon request from the Director, Financial Assistance Programs Division, Natural Resources Conservation Service, Room 5237S, Washington, DC 20250–2890 or electronically at: *http://www.nrcs.usda.gov/programs/eqip/* under the *EQIP Rules and Notices with Supporting Documents* title.

Small Business Regulatory Enforcement Fairness Act of 1996 (SBREFA)

Section 2904(c) of the Food, Conservation, and Energy Act of 2008 requires that the Secretary use the authority in section 808(2) of title 5, United States Code, which allows an agency to forego SBREFA's usual 60-day Congressional Review delay of the effective date of a major regulation if the agency finds that there is a good cause to do so. NRCS hereby determines that it has good cause to do so in order to meet the Congressional intent to have the conservation programs, authorized or amended by Title II, in effect as soon as possible. Accordingly, this rule is effective upon filing for public inspection by the Office of the Federal Register.

Executive Order 13175

Executive Order 13175 requires agencies to consult and collaborate with tribes, if policies or actions have substantial direct effects on tribes. NRCS has determined that this regulation does not have a substantial direct effect on tribes, since these regulatory provisions are required by statute, and these provisions do not impose unreimbursed compliance costs or preempt Tribal law. As a result, consultation is not required.

Regulatory Flexibility Act

The interim final rule will not have a significant environmental impact on small entities. NRCS has determined that the Regulatory Flexibility Act does not apply.

Environmental Analysis

Availability of the Environmental Assessment (EA) and Finding of No Significant Impact (FONSI). A programmatic environmental assessment has been prepared in association with this rulemaking. The analysis has determined that there will not be a significant impact to the human environment and as a result an Environmental Impact Statement is not required to be prepared (40 CFR part 1508.13). The EA and FONSI are available for review and comment for 30 days from the date of publication of this interim final rule in the **Federal Register**. A copy of the EA and FONSI may be obtained from the following Web site: *http://www.nrcs.usda.gov/programs/Env_Assess/*. A hard copy may also be requested from the following address and contact: National Environmental Coordinator, Natural Resources Conservation Service, Ecological Sciences Division, 1400 Independence Ave., SW., Washington, DC 20250. Comments from the public

should be specific and reference that comments provided are on the EA and FONSI. Public comment may be submitted by any of the following means: (1) E-mail comments to *NEPA2008@wdc.usda.gov*, (2) e-mail to egov Web site—*http://www.regulations.gov*, or (3) written comments to: National Environmental Coordinator, Natural Resources Conservation Service, Ecological Sciences Division, 1400 Independence Ave., SW., Washington, DC 20250.

Civil Rights Impact Analysis

NRCS has determined through a Civil Rights Impact Analysis that the interim final rule discloses no disproportionately adverse impacts for minorities, women, or persons with disabilities. Increased payment rates and advance payment for historically underserved producers, coupled with the national target of setting aside five percent of EQIP funds for socially disadvantaged farmers and ranchers and an additional five percent of EQIP funds for beginning farmers and ranchers is expected to increase participation among these groups. The data presented indicates producers who are members of the protected groups have participated in NRCS conservation programs at parity with other producers. Extrapolating from historical participation data, it is reasonable to conclude that NRCS programs, including EQIP, will continue to be administered in a non-discriminatory manner. Outreach and communication strategies are in place to ensure all producers will be provided the same information to allow them to make informed compliance decisions regarding the use of their lands that will affect their participation in USDA programs. EQIP applies to all persons equally regardless of their race, color, national origin, gender, sex, or disability status. Therefore, the EQIP rule portends no adverse civil rights implications for women, minorities and persons with disabilities.

Paperwork Reduction Act

Section 2904 of the 2008 Act provides that the promulgation of regulations and the administration of Title II of this Act shall be made without regard to chapter 35 of Title 44 of the United States Code, also known as the Paperwork Reduction Act. Therefore, NRCS is not reporting recordkeeping or estimated paperwork burden associated with this interim final rule.

Government Paperwork Elimination Act

NRCS is committed to compliance with the Government Paperwork Elimination Act, which requires Government agencies, in general, to provide the public the option of submitting information or transacting business electronically to the maximum extent possible. To better accommodate public access, NRCS has developed an online application and information system for public use.

Executive Order 12988

This interim final rule has been reviewed in accordance with Executive Order 12988, Civil Justice Reform. The provisions of this interim final rule are not retroactive. The provisions of this interim final rule preempt State and local laws to the extent that such laws are inconsistent with this interim final rule. Before an action may be brought in a Federal court of competent jurisdiction, the administrative appeal rights afforded persons at parts 614, 780, and 11 of this title must be exhausted.

Federal Crop Insurance Reform and Department of Agriculture Reorganization Act of 1994

The Federal Crop Insurance Reform and Department of Agriculture Reorganization Act of 1994, Title III, section 304, requires that for each proposed major regulation with a primary purpose to regulate issues of human health, human safety, or the environment, USDA is to publish an analysis of the risks addressed by the regulation and the costs and benefits of the regulation. NRCS has determined that such a risk assessment does not apply to this interim final rule. NRCS recognizes that although such assessments can be quite helpful, the Act pertains only to a rule that has been designated as a ''proposed major regulation.'' NRCS does not consider ''interim final'' or ''final'' rules as falling into the category of proposed major regulations.

Unfunded Mandates Reform Act of 1995

NRCS assessed the effects of this rulemaking action on State, local, and Tribal governments, and the public. This action does not compel the expenditure of $100 million or more in any one year (adjusted for inflation) by any State, local, or Tribal governments, or anyone in the private sector; therefore, a statement under section 202 of the Unfunded Mandates Reform Act of 1995 is not required.

Economic Analysis—Executive Summary

Pursuant to Executive Order 12866, Regulatory Planning and Review, the Natural Resources Conservation Service (NRCS) has conducted a benefit-cost analysis (BCA) of the Environmental Quality Incentives Program (EQIP) as formulated for the Interim Final Rule. This requirement provides decision makers with the opportunity to develop and implement a program that is beneficial, cost effective, and that minimizes negative impacts to health, human safety, and the environment. Congress passed amendments to the program that requires the Secretary of Agriculture, within 90 days after the enactment of the EQIP amendments, to promulgate regulations necessary to carry out the program.

In considering alternatives for implementing EQIP, the United States Department of Agriculture (USDA) followed the legislative intent to optimize environmental benefits, address natural resource concerns and problems, establish an open participatory process, and provide flexible assistance to producers who apply appropriate conservation measures that enable the satisfaction of Federal and State environmental requirements. Because EQIP is a voluntary program, the program will not impose any obligation or burden upon agricultural producers who choose not to participate. The program has been authorized by the Congress at $7.325 billion over the five-year period beginning in fiscal year (FY) 2008 through FY 2012, with annual amounts of $1.2 billion for FY 2008, $1.337 billion in FY 2009, $1.45 billion in FY 2010, $1.588 billion in FY 2011, and $1.75 billion in FY 2012.

The EQIP technical and financial assistance facilitates the adoption of conservation practices that, when installed or applied to technical standards, can mitigate degradation of the environment. These actions are not limited to their beneficial impacts on resource conditions on-site, but produce significant off-site environmental benefits for the public-at-large, such as the reduction of non-point source water pollution, leading to enhancements to freshwater and marine water quality and fish habitat, improved aquatic recreation opportunities, and reduced sedimentation of reservoirs, streams, and drainage channels; more efficient irrigation water usage; improved air quality by reducing wind erosion; an increase in carbon stored in the soil, leading to reduced atmospheric amounts of carbon; reduced pollution of surface and ground water, leading to enhanced drinking water supplies; reduced flood damages; conserved energy; and enhancements to wildlife habitat. Most of these factors are taken into consideration in the transfer benefit values used in this analysis.

Other significant environmental impacts have an appearance of being solely a private benefit, such as: The maintenance of the long-term productivity of the resource base, improved grazing productivity, more efficient crop use of animal waste and fertilizer and the fostering of energy conservation. However for this analysis, these impacts are considered as public benefits in that they have also have impacts in input and output markets, i.e. increasing the availability of those inputs at lower prices and/or for use in other sectors of the economy. This analysis did not utilize a social welfare impact model or general equilibrium model that would show these final producer and consumer welfare changes (brought about by changes in inputs used and output levels of EQIP participants). Thus, the economic impacts estimated in this analysis by these changes should be considered as first approximations of possible social welfare gains in input and output markets. In this analysis, the benefit categories which could be construed as having a high component of private benefit are clearly identified.

There is another group of benefits derived from EQIP which can not be empirically estimated at this time. As explained in the body of the report, there are also many conservation practices for which economic benefit estimates are not available. For example, the benefits derived from the remaining five percent of the EQIP funds used for 23 practices for which monetary benefits are important but could not easily be estimated (over half of these remaining funds were for the Pest Management Practice—595). As a result, they are not included in the quantitative estimates of benefits. In addition, many other environmental impacts were not included in this economic analysis because no clear conversion methods of the environmental impacts to economic terms were available. For additional information on these environmental impacts, see the NEPA environmental assessment for this regulation. In the future, nationally consistent estimates of beneficial environmental outcomes resulting from conservation practices and systems will be possible through the use of the results from the interagency Conservation Effects Assessment Project (CEAP). CEAP was established to develop a scientific understanding and methodology for estimating the environmental benefits and effects of conservation practices on agricultural landscapes at national, regional, and watershed scales. CEAP will become a science-based plan designed to help meet the conservation and technology challenges of the future through a coordinated multi-agency assessment, research, and outreach-extension program to translate science into practice. CEAP has been underway since 2003, and is composed of multiple components focusing on cropland, grazing land, wetlands, and wildlife, and watersheds. Initial CEAP results will be available for the cropland component in FY2009. Some results from the wetlands, wildlife, and watershed assessment components are already available at: *http://www.nrcs.usda.gov/technical/nri/ceap/*. These results are expected to improve the Agency's ability to report on long-term conservation benefits being delivered by programs, such as EQIP.

Despite these limitations in our ability to estimate environmental benefits, the new EQIP is expected to have a substantial effect on the environment due to expanded funding compared with a baseline of continuing EQIP at an annual funding level of roughly $1 billion. Resource treatments are estimated to increase protection for an additional 3.9 million acres for sheet and rill water erosion reduction, 3.9 million acres for wind erosion reduction improving air quality, 5.6 million acres for improved fertilizer management, 2.0 million acres for net irrigation water reduction, 17.5 million acres for grazing land productivity, and 2.8 million acres of improved wildlife habitat. Also, the waste from an additional 1.3 million animal units will be treated under the new program directly improving water quality. Using these quantity changes plus benefit transfer values derived from the literature, total benefits are estimated at $10.4 billion for EQIP with the 2008 Act expanded funding allocation. Throughout the analysis, benefit estimates are compared to $10.4 billion total costs which include both the EQIP funds and costs borne by participants, producing a net benefit of approximately $57 million above total costs.

Methodology

In developing the BCA for EQIP, it is necessary to identify a baseline for comparison. The baseline for this analysis is EQIP as reauthorized in the 2002 Act with FY 2007 funding levels. In the 2002 Act, EQIP funding for FY 2005 through FY 2008 was capped at roughly $1 billion until the 2008 Act was passed when additional funding was provided. The actual FY 2007 funding level of $978 million is used as the baseline.

Public costs quantified in this analysis are the total TA and FA assistance funds outlined in the Congressional Budget Office's (CBO) scoring of the 2008 Act. Private costs are out-of-pocket costs paid voluntarily by participants. As stated above, the quantifiable benefits are a subset of the environmental benefits that accrue to the types of practices implemented through EQIP. Available data and literature support benefits in the following benefit categories:

- Animal waste management (leading to improved water quality through better management) 1/ [1];
- Sheet and rill water erosion (reducing soil erosion);
- Grazing land productivity (increasing yields) 1/;
- Irrigation water use (reducing quantity used);
- Air quality (through reduced wind erosion);
- Fertilizer use (reduced fertilizer expense through nutrient management not associated with animal waste) 1/;
- Wildlife habitat (enhanced wildlife viewing and hunting);
- Energy use (reduced energy consumption associated with conservation tillage practices); and,
- Carbon sequestration (higher soil carbon levels associated with conservation tillage and grassland practices).

In order to conduct the analysis, certain assumptions were made based on the available data.

- The practice mix for the current (2007-base) and the new EQIP is the same. The new rule places additional emphasis on energy, organic practices, and forest management; however, due to the lack of benefit data for these types of practices, their associated benefits are not included in this analysis.[2]
- Quantifiable and per-unit benefits are constant and based on national average estimates.
- Technical assistance costs incurred by NRCS are based on the full workload associated with implementing EQIP and take into consideration projected average contract sizes.
- Average annual and net present value calculations use discount factors of seven and three percent, which are recommended by the Office of Management and Budget (OMB). All tables are presented using the seven percent discount rate. The analysis is also calculated using the three percent discount rate (see table 9).

[1] The "1/" above signifies that this benefit category could be construed as having elements of both environmental and private benefit impacts. More information on these distinctions is provided in the document.

[2] Additional time and resources would be necessary to modify the present model to incorporate such shifts in program emphasis.

• Environmental benefits generated in the animal waste management benefit category were adjusted downward by 42 percent to account for mandatory regulatory requirements associated with large concentrated animal feeding operations (CAFOs). This reduction is necessary to avoid any double counting of benefits attributed to EPA's CAFO regulations. The total CAFO-related costs associated with conservation practices were reduced by 23 percent

• Other than large CAFOs meeting EPA regulatory requirements, the adoption of conservation practices by EQIP participants is assumed to be solely attributed to their participation in EQIP.

Conclusions

The EQIP benefit-cost analysis assumes that the basic program features of EQIP created in 2002 (the ''current program'') remains the same, but is funded at higher funding allocations as a result of the 2008 Act.

The summary table below shows the estimated values of each benefit category and the estimated costs associated with EQIP for the ''current'' (2007-base) and ''new'' (with increased funding) scenario. Under the assumption that the current program continues at level funding, the expected present value of benefits over the period of FY 2007 to FY 2012 is estimated at $7.1 billion, with $0.5 billion coming from improved animal waste management and $6.6 billion from improved land treatment. Expected net benefits are estimated at $39 million above total costs, including producer costs, other non-federal costs, and federal (EQIP) costs.

With expanded funding, the estimated present value of benefits over the period of FY 2007 to FY 2012 was $10.4 billion with $0.8 billion coming from improved animal waste management and $9.6 billion from land treatment. Estimated net benefits were $57 million above total costs. This provides $18 million in additional net benefits due to the expansion of EQIP funds in the 2008 Farm Bill over the roughly $1.0 billion annual baseline funding.

TABLE 1—SUMMARY OF CUMULATIVE 5-YEAR EQIP BENEFITS AND COSTS OVER FY 2008–FY 2012, USING A SEVEN PERCENT DISCOUNT RATE

[$ million of 2007 dollars]

Benefit Category	To not implement EQIP	2007 EQIP with $1 billion/year FY 2008–FY 2012	2008 Act benefits & costs	Increases with the 2008 Act	2007 EQIP with $1 billion/year (acres or animal units)	2008 Act (acres or animal units)	Unit
Animal waste management*.	$0	$554	$816	$262	2,724,000	4,061,000	Animal Units.
Sheet and rill water erosion.	0	1,948	2,869	920	8,019,000	11,955,000	Acres.
Grazing land productivity.	0	3,111	4,580	1,470	35,586,000	53,057,000	Acres.
Irrigation water use.	0	231	341	109	4,014,000	5,985,000	Acres.
Air quality	0	181	266	85	8,039,000	11,985,000	Acres.
Fertilizer use	0	601	885	284	11,370,000	16,953,000	Acres.
Wildlife habitat	0	172	254	81	5,660,000	8,439,000	Acres.
Energy use	0	210	309	99	7,446,000	11,102,000	Acres.
Carbon sequestration.	0	82	121	39	41,525,000	61,911,000	Acres.
Grand Total Benefits.	0	7,091	10,441	3,350			
Costs:							
Total costs**	0	7,053	10,384	3,332			
Net Benefits:							
Net benefits	0	39	57	18			

*Environmental benefits from improved animal waste management attributed to EQIP are 42 percent below the total CAFO-related benefits to account for environmental benefits captured by EPA regulatory requirements on large CAFOs. Likewise, costs associated with large CAFOs represent about 23 percent of NRCS costs related to CAFOs of all sizes. These costs were deducted from the analysis as well.

**Total costs include all federal costs plus private and other non-federal costs which have historically matched federal EQIP FA funding at an overall 50 percent cost-share rate discounted at seven percent. Costs associated with large CAFOs (roughly 23 percent) were deducted from the analysis.

Section 2904 of the Food, Conservation, and Energy Act of 2008

The Commodity Credit Corporation (CCC) is not required by 5 U.S.C. 553 or by any other provision of law, to publish a notice of proposed rulemaking with respect to the subject matter of this rule. Section 2904 of the 2008 Act requires regulations to be published within 90 days after the date of enactment and authorizes the CCC to promulgate an interim final rule effective upon publication with an opportunity for notice and comment. CCC has determined that an interim final rule is necessary to expedite the effective date of rulemaking in order to meet the intent of section 2904.

Discussion of Program

The 2008 Act has reauthorized and amended the Environmental Quality Incentives Program, which had been added to the Food Security Act of 1985 (1985 Act) (16 U.S.C. 3801 *et seq.*) by the Federal Agriculture Improvement and Reform Act of 1996 (1996 Act) (16 U.S.C. 3839aa). The program is implemented under the general supervision and direction of the Chief of NRCS, who is a Vice President of the Commodity Credit Corporation (CCC).

Through EQIP, NRCS provides assistance to farmers and ranchers to conserve and enhance soil, water, air, and related natural resources on their land. Eligible lands include cropland, grassland, rangeland, pasture, wetlands, nonindustrial private forest land, and other agricultural land on which agricultural or forest-related products,

or livestock are produced and natural resource concerns may be addressed. Participation in the program is voluntary.

Under EQIP, NRCS will provide assistance in a manner that will promote agricultural production, forest management, and environmental quality as compatible goals; optimize environmental benefits; and help farmers and ranchers meet Federal, State, and local environmental requirements. NRCS will offer a consolidated and simplified program throughout the Nation using the technical services of NRCS and technical service providers. NRCS first allocated $130 million in EQIP funds in 1996. Since the program began, NRCS has entered into 314,000 contracts with farmers and ranchers to apply conservation practices on approximately 143 million acres. The Agency has evaluated twelve years of program implementation and has assessed opportunities to improve program administration. The changes in this interim final rule are the result of this evaluation and the statutory changes authorized by the 2008 Act.

In summary, these changes include, but are not limited to:

- Extending EQIP's implementation through fiscal year 2012.
- Adding or revising the following terms and associated definitions: ''agricultural land,'' ''estimated income foregone,'' ''forest management plan,'' ''integrated pest management,'' ''legal entity,'' ''local working group,'' ''National Organic Program,'' ''nonindustrial private forest land,'' ''operation and maintenance agreement,'' ''organic system plan,'' ''payment,'' ''person,'' ''socially disadvantaged farmer or rancher,'' and ''technical assistance.''
- Reaffirming EQIP's eligible lands to include nonindustrial private forest lands.
- Providing payments for conservation practices related to organic production and for conservation practices related to the transition to organic production.
- Providing payments up to 75 percent of the estimated costs associated with planning, design, materials, equipment, installation, labor, management, maintenance, or training, or up to 100 percent of the estimated income foregone by a producer to implement particular conservation practices.
- Giving the State Conservationist, as delegated by the Chief, discretion to accord great significance to a conservation practice that the Secretary determines promotes residue management, nutrient management, air quality management, invasive species management, pollinator habitat, animal carcass management technology, or pest management.
- Limiting payments to $20,000 per year or $80,000 during any six-year period for persons or legal entities who receive payments for conservation practices related to organic production or the transition to organic production.
- Authorizing NRCS to cancel or otherwise nullify a contract if a producer who is receiving payments for conservation measures related to organic production is not pursuing organic certification or is not in compliance with the Organic Foods Production Act of 1990 (7 U.S.C. 6501 *et seq.*).
- Requiring NRCS to prioritize applications: (1) Based on overall cost-effectiveness, (2) based on how effectively and comprehensively the project addresses the designated resource concern or resource concerns, (3) that best fulfill the purposes of EQIP, and (4) that improve conservation practices or systems in place at the time the contract offer is accepted or that will complete a conservation system. (Note: Items 2 and 3 are included in the existing EQIP regulations.)
- Requiring applications of similar crop or livestock operations to be grouped together for evaluation purposes.
- Requiring NRCS to consider a plan developed in order to acquire a permit under a water or air quality regulatory program as equivalent to a plan of operations, if the plan contains elements equivalent to those required in a plan of operations. Section 2506 of the 2008 Act amends § 1240E(b) of the 1985 Act to require the Secretary, to the maximum extent practicable to eliminate duplication of planning activities.
- Requiring a forest management plan when the EQIP plan of operations addresses forestland.
- Lowering the payment limitation for participants from $450,000 to $300,000 during any six-year period, except for projects having special environmental significance, in such cases the payments will be limited to $450,000.
- Providing payments, through the Conservation Innovation Grants Program (CIG), to producers to implement practices to address air quality concerns from agricultural operations and to meet Federal, State, and local regulatory requirements.
- Creating criteria to evaluate an acceptable watershed-wide project for the purpose of implementing water conservation or irrigation practices on newly irrigated lands.
- Providing an increased payment rate to historically underserved producers that include limited resource, beginning, and socially disadvantaged farmers or ranchers.
- Providing advance payments, of up to 30 percent of the anticipated costs to be incurred for the purpose of purchasing materials or services to implement a conservation practice, to historically underserved producers.
- Establishing a national target to set aside five percent of EQIP funds for socially disadvantaged farmers or ranchers and an additional five percent of EQIP funds for beginning farmers or ranchers.

The fundamental purpose of the program, assisting farmers and ranchers to implement conservation practices to provide environmental benefits, has not changed. Revisions to the program have focused primarily on expanding participation among traditionally underserved populations, including organic growers; limiting payments to $300,000 per legal entity or person, except for environmentally significant projects; streamlining the application and ranking process; and expanding practices and activities that are eligible for payment under EQIP. The interim final rule also includes changes to streamline program implementation and make the participant's contract responsibilities clearer and more transparent.

Conservation Innovation Grants

The 2008 Act added a provision to EQIP which dedicates funding under the Conservation Innovation Grants program (CIG) to address air quality specifically. Section 1240H of the 1985 Act, as amended by section 2509 of the 2008 Act, authorizes the Secretary to provide payments to producers to implement practices, including innovative practices, to address air quality concerns from agricultural operations. NRCS will use these dedicated funds to assist producers in adopting and implementing existing and innovative practices to address air quality concerns. Eligible practices will meet NRCS Field Office Technical Guide (FOTG) standards or interim practice standards, approved by the State Conservationist, in consultation with the State Technical Committee. Section 1240B(b) of the 1985 Act specifies that payments are limited to ''implementing practices.'' Payments for stand-alone equipment that have beneficial impacts on air quality are not authorized; however, payments for conservation practices may include

consideration of the costs authorized for equipment that is deemed an essential component of a conservation practice included in the FOTG. *NRCS welcomes comments and suggestions on new innovative practices that may be approved for payment, such as but not limited to, improvements in mobile or stationary equipment, including engines, and the use of slow and controlled release fertilizers. NRCS also welcomes comment about how the CIG air quality provisions should be implemented.*

Summary of Provisions

The regulation is organized into three subparts: Subpart A—General Provisions; Subpart B—Contracts and Payments; Subpart C—General Administration. The basic structure of the regulation has not changed. However, NRCS proposes amending several sections in Subparts A and B to make the regulation consistent with the requirements of the 2008 Act amendments, streamline processes and procedures, and increase transparency of the program, particularly as it relates to a participant's contract responsibilities. Below is a summary of each section. The summary of Subpart C is limited, since a majority of the changes in Subpart C are minor.

Subpart A—General Provisions

Section 1466.1, ''Applicability,'' is revised as follows:

Section 1466.1 sets forth the purpose, scope, and objectives of EQIP. In paragraph (a), NRCS clarifies the program's purposes to include forest management. Paragraph (a) also reaffirms the original statutory intent, ensuring EQIP continues to provide assistance to farmers and ranchers to address soil, water and air quality; wildlife habitat; surface and groundwater conservation; and related natural resource concerns. This interim final rule reiterates the statutory intent that EQIP purposes are to be achieved by implementing conservation practices, and includes a new reference to energy conservation on eligible land.

NRCS added paragraph (b) to clarify where EQIP assistance is available. EQIP continues to be available to eligible persons or legal entities in all 50 States, the District of Columbia, the Commonwealth of Puerto Rico, Guam, the Virgin Islands of the United States, American Samoa, and the Commonwealth of the Northern Mariana Islands.

Section 1466.2, ''Administration,'' describes the roles of NRCS, State Technical Committees, and local working groups. Paragraph (b) of § 1466.2, which required consultations between the Farm Service Agency (FSA) and NRCS has been deleted, since a 2003 decision by the Secretary authorizes NRCS to administer EQIP in its entirety.

NRCS continues to administer EQIP at the State and local levels. Determinations related to eligible practices and payment rates are made at the State level, in consultation with the State Technical Committee. State Technical Committees and local working groups are bodies that provide advice to the State Conservationist and designated conservationist on technical and programmatic matters related to the implementation of the 1985 Act's conservation programs. State Technical Committees and local working groups consist of representatives from Federal, State, Tribal, and local governments, as well as nongovernmental organizations and individuals, who have conservation expertise.

Section 1466.3, ''Definitions,'' sets forth definitions for terms used throughout this regulation. Several new definitions have been added, such as: ''estimated income foregone,'' ''forest management plan,'' ''integrated pest management,'' ''National Organic Program,'' ''nonindustrial private forest land,'' ''operation and maintenance agreement,'' ''organic system plan,'' and ''socially disadvantaged farmer and rancher.'' Other definitions have been revised to accommodate requirements of the 2008 Act including: ''agricultural land,'' ''animal waste management facility,'' ''Conservation Innovation Grants,'' ''conservation practice,'' ''legal entity,'' ''local working group,'' ''participant,'' ''payment,'' ''person,'' ''producer,'' and ''technical assistance,'' while others have been revised in an effort to make them consistent with other NRCS-administered programs, such as ''agricultural operation,'' ''applicant,'' ''cost-effectiveness,'' ''EQIP plan of operations,'' ''liquidated damages,'' ''Natural Resources Conservation Service,'' ''operation and maintenance,'' ''priority resource concern,'' ''resource concern,'' and ''wildlife.'' The remaining definitions, ''historically underserved producer,'' ''livestock,'' ''Regional Conservationist,'' ''State Conservationist,'' and ''technical service provider,'' have been revised in an effort to simplify and clarify definitions within the rule. Specifically, the following definitions have been amended:

The definition of *''agricultural land''* is revised to include those areas identified by EQIP's authorizing legislation as eligible land. The definition added the term ''grassland'' to clarify that such lands are eligible for EQIP assistance. The definition also further defined agricultural lands to include lands on which agricultural and forest-related products, or livestock are produced. Agricultural lands may include cropped woodland, marshes, incidental areas included in the agricultural operation, and other types of agricultural land used for production of livestock. Incidental areas are areas, within the agricultural operation that is receiving conservation treatment, which may not be grazed or cropped. Such areas may include, but are not limited to, pivot corners, access roads, and streambanks.

NRCS revises the definition of *''agricultural operation''* to make it consistent with other conservation programs administered by NRCS. ''Agricultural operation'' is defined as a ''parcel or parcels of land whether contiguous or noncontiguous, which the producer is listed as the operator or owner/operator in the FSA record system, which is under the effective control of the producer at the time the producer applies for contract, and that is operated by the producer with equipment, labor, management, and production, forestry, or cultivation practices that are substantially separate from other operations.''

The definition of ''animal waste management facility'' is clarified to state that such a facility will be implemented within the context of a Comprehensive Nutrient Management Plan and is consistent with the Field Office Technical Guide.

The definition of *''applicant''* is revised to include the 2008 Act's added terminology. Specifically, the term ''individual,'' is replaced with the term ''person,'' and the word ''legal'' is inserted prior to ''entity'' to reflect these changes. ''Applicant'' is defined as follows: ''a person, legal entity, joint operation, or tribe that has an interest in an agricultural or forestry operation, as defined in part 1400 of this chapter, who has requested to participate in EQIP.''

NRCS requests public comment on the current definition of *''at-risk species.''* As currently defined, ''at risk species means any plant or animal species as determined by the State Conservationist, with advice from the State Technical Committee, to need direct intervention to halt its population decline.'' *Specifically, NRCS seeks public comment on how to tailor the definition to better assist species in greatest need.*

The term, *''beginning farmer and rancher,''* remains the same as the definition included in the final rule

published on May 30, 2003 (68 FR 32337), as defined by 7 U.S.C. 1991(a). Throughout the text, the term has become a subset of the ''historically underserved producer'' term to reduce the number of times it and other associated terms are cited in the regulation.

NRCS also revises the *''Conservation Innovation Grants''* definition to accommodate the 2008 Act's clarification that forest management is considered agricultural production under EQIP. NRCS defines *''Conservation Innovation Grants''* as ''competitive grants made under EQIP to individuals, and governmental and non-governmental organizations to stimulate and transfer innovative technologies and approaches, to leverage Federal funds, and to enhance and protect the environment, in conjunction with agricultural production and forest management.'' The term ''transfer'' is added to show that one of the purposes of the *Conservation Innovation Grants* is to transfer innovation to the private sector.

The definition, *''conservation practice,''* is changed to reflect the 2008 Act's expansion of the definition of *''conservation practice''* beyond structural and land management practices, to include forest management and vegetative practices, as well as other practices that achieve the program purposes and positive environmental outcomes, like comprehensive nutrient management plans, forest management plans, and other plans determined acceptable by the Chief. NRCS has built upon the statutory examples of planning activities that are comprehensive in nature, such as agricultural energy management plans, dryland transition plans, integrated pest management plans, and other planning activities that meet FOTG requirements, approved by the NRCS State Conservationist, in consultation with the State Technical Committee. *NRCS requests comments from the public on what type of comprehensive planning activities should be eligible for payment under EQIP.* Throughout this regulation, the term ''conservation practice'' replaces the terms ''structural practices'' and ''land management practices,'' except where ''structural practices is specifically mentioned.''

Within the definition of *''contract,''* NRCS replaces the terms ''individual'' and ''entity'' with the term, ''participant.'' ''Contract'' means ''a legal document that specifies the rights and obligations of any participant in the program.'' An EQIP contract is a binding cooperative agreement for the transfer of assistance from USDA to the participant to share in the costs in applying the conservation practices.

The term, *''cost-share payments''* is removed to reflect the amended statutory language. To comply with the statutory change, the terms, *''cost-share payments''* and *''incentive payments''* have been merged to form one definition, entitled *''payments,''* which means financial assistance provided to the participant for estimated costs incurred performing or implementing conservation practices, including costs for: Materials, equipment, labor, design and installation, maintenance, management, or training, as well as the estimated income foregone by the participant for designated conservation practices. The term *''payment''* replaces the terms *''cost-share payments''* and *''incentive payments''* throughout the regulation.

NRCS revises the definition of *''cost-effectiveness.''* The term *''cost-effectiveness''* means the ''least-costly option for achieving a given set of conservation objectives.''

The term, *''entity,''* is replaced by the term, *''legal entity,''* to reflect the definitions outlined in the amendments to Section 1201 of the 1985 Act by Section 2001 of the 2008 Act.

The definition of *''estimated income foregone''* is added to clarify how producers will be compensated in accordance with Section 1240B(d) of the 1985 Act. As defined, ''*estimated income foregone* means an estimate of the net income loss associated with the adoption of a conservation practice, including a change in land use or land taken out of production or the opportunity cost associated with the adoption of a conservation practice. This shall not include losses of income due to disasters or other events unrelated to the conservation practice.''

The definition, *''EQIP plan of operations,''* is revised to clarify for applicants, participants, and the public that an operation and maintenance agreement and EQIP plan of operations are components of the EQIP contract.

NRCS includes the acronym, *''FOTG,''* in the definition of *''field office technical guide''* and also removes the term, ''treatment,'' and replaces it with the inclusive term, ''conservation practices,'' which is defined in § 1466.3. NRCS defines *''Field Office Technical Guide (FOTG)''* as follows: ''the official local NRCS source of resource information and interpretations of guidelines, criteria, and requirements for planning and applying conservation practices and conservation management systems. It contains detailed information on the conservation of soil, water, air, plant, and animal resources applicable to the local area for which it is prepared.''

NRCS adds a definition for the term, *''forest management plan,''* into § 1466.3 as a result of requirements included in the amendments to Section 1240E of the 1985 Act by Section 2506 of the 2008 Act. A *forest management plan* means a site-specific plan that is prepared by a professional resource manager and approved by the State Conservationist. The plan, which is compatible with the participant's objectives, identifies and describes actions to be taken by the participant to enhance soil, water, air, fish, and wildlife resources on such land.

Section 1240E, as amended by Section 2506 of the 2008 Act, requires a *forest management plan*, when the EQIP plan of operations addresses nonindustrial private forest land. The amendment gives discretion to the Secretary to determine the types of forest management plans that are eligible for EQIP payment. Indian forest lands, administered by the Bureau of Indian Affairs (BIA), have requirements for the implementation of forest management activities and these standards will be utilized when developing a forest management plan on BIA-administered land. NRCS has included the guidelines for a forest management plan within the ''forest management plan'' definition, but has given further discretion to the appropriate State Conservationist. A forest management plan may be a forest stewardship plan, as defined in the Cooperative Forestry Assistance Act of 1978, or another site-specific plan that contains elements equivalent to those of a *forest management plan*, approved by State Conservationist, in consultation with the State Forester or the BIA, where Indian forest lands and the associated natural resources are administered by BIA. The plan will comply with Federal, State, Tribal, and local laws, regulations, and permit requirements. NRCS is requesting public comment on other types of forest management plans that may be considered to be eligible for EQIP payment.

The term ''historically underserved producer'' combines the terms *''beginning farmer or rancher''*, *''limited resource farmer or rancher''* and *''socially disadvantaged farmer or rancher''* and their respective definitions into one term to simplify terms within the interim final rule. Definitions for *''beginning farmer and rancher''* and *''limited resource farmer and rancher''* remain the same as those definitions outlined in EQIP's final rule published on May 30, 2003. However, the definition for *''socially*

disadvantaged farmer or rancher'' has been added in accordance with the 2008 Act which sought to expand EQIP participation to be more inclusive of farmers and ranchers who have been subjected to racial or ethnic prejudices because of their identity as a member of a group, without regard to their individual qualities. This definition originates from Section 2501(g) of the Food, Agricultural, Conservation, and Trade Act of 1990, which defines ''socially disadvantaged.''

NRCS removes the term, *''incentive payments.''* To reflect the statutory language, NRCS merges the terms *''cost share payments''* and *''incentive payments''* into one single term, entitled *''payments.'' ''Payment''* means financial assistance provided to the participant for estimated costs incurred performing or implementing conservation practices, including costs for: Materials, equipment, labor, design and installation, maintenance, management, or training, as well as the estimated income forgone by the participant for designated practices.

NRCS inserts the term, *''integrated pest management,''* into § 1466.3 as result of changes made by Section 2001 of the 2008 Act to Section 1201(a)(16) of the 1985 Act. The definition is the same as the statutory definition which defines integrated pest management as ''a sustainable approach to managing pests by combining biological, cultural, physical, and chemical tools in a way that minimizes economic, health, and environmental risks.''

NRCS replaces the term, *''land management practice,''* with the more inclusive term, *''conservation practice,''* to reflect statutory changes. In accordance with the 2008 Act amendments, the term, *''conservation practice,''* is expanded beyond structural and land management practices, to include forest management and vegetative practices, as well as other practices that fulfill the program purposes, like comprehensive nutrient management plans, forest management plans, and other plans determined to be acceptable by the Chief. NRCS has expanded the definition of conservation practice to include planning activities that are comprehensive and holistic in nature, such as agricultural energy management plans, dryland transition plans, integrated pest management plans, and other assessment and planning activities that meet FOTG requirements, approved by the NRCS State Conservationist in consultation with the State Technical Committee.

The term, *''legal entity,''* replaces the term, *''entity,''* to reflect the definition set out in amendments by Section 2001 of the 2008 Act.

The term, *''limited resource farmer and rancher,''* remains the same as the definition included in the former program regulation, with an accommodation made to increase the level of gross farm sales from $100,000 to $155,200. Throughout portions of the text, the term has become a subset of the ''historically underserved producer,'' in order to reduce the number of times it and other associated terms are recited in the regulation.

The term, *''liquidated damages,''* is revised to clarify when and under what circumstances liquidated damages are collected. Liquidated damages is defined as a ''sum of money stipulated in the EQIP contract that the participant agrees to pay NRCS if the participant fails to adequately complete the terms of the contract. The sum represents an estimate of the technical assistance expenses incurred by NRCS to service the contract, and reflects the difficulties of proof of loss and the inconvenience or non-feasibility of otherwise obtaining an adequate remedy.''

The term, *''livestock,''* is simplified and reflects the definition contained in the 2008 Act. It is the responsibility of the Chief to determine livestock operations that are eligible for EQIP assistance. The decisionmaking authority resides with the Chief in order to ensure consistency among States.

The term, *''local working group,''* has been revised. Local working groups are defined in 7 CFR part 610.

The term, *''National Organic Program,''* has been inserted to implement the 2008 Act's amendments related to conservation practices associated with organic production or for conservation practices related to the transition to organic production. The National Organic Program is a national program which regulates the standards for any farm, wild crop harvesting, or handling operation that wants to sell an agricultural product as organically produced. The National Organic Program is administered by the Agricultural Marketing Service.

The term, *''Natural Resources Conservation Service,''* has been inserted to define the USDA agency that has responsibility for administering EQIP.

The term, *''nonindustrial private forest land''* has been inserted based on the definition in the 2008 Act amendments. Nonindustrial private forest land is rural land, as determined by the Secretary, that has existing tree cover or is suitable for growing trees; and is owned by any nonindustrial private individual, group, association, corporation, Indian tribe, or other private legal entity that has definitive decision-making authority over the land.

NRCS revises the definition of *''operation and maintenance''* to clarify that participants are expected to maintain EQIP-funded conservation practices for the conservation practice's lifespan, as set forth in the operation and maintenance agreement. By maintaining the conservation practice for its lifespan, the participant ensures that the conservation practice will function for its intended use and will not cause harm or damage to the environment.

NRCS adds the term, *''operation and maintenance agreement,''* to describe the document that, in conjunction with the EQIP plan of operations, specifies the Agency expectation that participants will operate and maintain conservation practices installed with EQIP assistance.

NRCS adds the term, *''organic system plan,''* which is defined as a management plan for organic production or for an organic handling operation that has been agreed to by the producer or handler and the certifying agent. The Organic System Plan includes written plans concerning all aspects of agricultural production or handling.

NRCS revises the definition, *''participant,''* to reflect the 2008 Act's statutory definition of ''person'' and ''legal entity.'' A participant is a person, joint venture, legal entity, or tribe who is receiving payment or is responsible for implementing the terms and conditions of an EQIP contract.

The term, *''payment,''* has been added and replaces the terms ''cost share payments'' and ''incentive payments.'' The term, *''payment,''* means financial assistance provided to the participant for estimated costs incurred performing or implementing conservation practices, including costs for: Materials, equipment, labor, design and installation, maintenance, management, or training, as well as the estimated income foregone by the participant for designated conservation practices. The term *''payment''* replaces the terms, ''cost share payments'' and ''incentive payments'' throughout the text.

The definition for *''person''* is revised to reflect the requirements of part 1400 of this chapter, the regulation which details CCC's payment limitation policies.

NRCS revises the term *''priority resource concern''* to align program terminology with other conservation programs administered by NRCS.

The term *''producer''* has been expanded to reflect the 2008 Act's

amendments to EQIP so that ''producer'' now means a person or legal entity or joint operation who is engaged in agricultural production or forestry management. The term, ''livestock,'' is removed from this definition, because the term, ''agricultural production,'' is inclusive of livestock operations.

The term, *''Regional Assistant Chief,''* has replaced the term, ''Regional Conservationist.'' In 2004, the NRCS reorganized, eliminated six Regional Conservationist positions, and created three Regional Assistant Chief positions. This definition has been revised to reflect that change.

The term, *''resource concern,''* replaces the term, *''related resource concern,''* in an effort to streamline program terminology with other conservation programs administered by NRCS.

NRCS inserts the term, *''socially disadvantaged farmer or rancher,''* and its associated definition. A *''socially disadvantaged farmer or rancher''* is a farmer or rancher who has been subjected to racial or ethnic prejudices because of their identity as a member of a group without regard to their individual qualities. The definition for *''socially disadvantaged farmer or rancher,''* which includes members of Indian tribes, has been added in accordance with the 2008 Act which sought to expand EQIP participation to be more inclusive of farmers and ranchers who have been subjected to racial or ethnic prejudices. This definition originates from Section 2501(g) of the Food, Agricultural, Conservation, and Trade Act of 1990, which defines ''socially disadvantaged.''

NRCS revises the definition of *''State Conservationist''* to clarify that the former State Conservationist of Hawaii position has become the director of the Pacific Islands.

NRCS revises the term, *''technical assistance,''* to mirror the definition provided in the amendments by Section 2001 of the 2008 Act.

NRCS revises the definition, *''technical service provider (TSP),''* to clarify that TSPs are used to provide technical services to program participants, in lieu of or on behalf of NRCS. A TSP is ''an individual, private-sector entity, or public agency certified by NRCS to provide technical services to program participants in lieu of or on behalf of NRCS.''

NRCS revises the term, *''wildlife,''* to make the definition consistent with definitions used in the other cost-share programs administered by NRCS.

Section 1466.4, ''National priorities,'' has been amended to address comments made by the public. On March 23, 2005, NRCS published a Request for Public Comments (70 FR 14578) soliciting comments from the public on which resource concerns should be given national priority. NRCS sought public feedback in order to ensure that the stated national priorities reflected the most pressing natural resource needs while providing emphasis to off-site environmental benefits. NRCS received written comments from 85 individuals, agencies, and non-governmental organizations. In addition, NRCS held numerous public listening forums in which the public was invited to comment on the priorities. After consideration of the public input, NRCS determined that the former program's national priorities adequately address the natural resource issues that were foremost identified, as no emerging issues of significance surfaced as a result of the feedback. However, as a result of public feedback and the need for clarification in the program, the first priority has been separated into two concerns, one for water quality, to include concentrated animal feeding operation (CAFO) as well as non-point source pollution, and a separate priority for water conservation, to address the quantity of ground and surface water available.

Section 1466.5, ''National allocation and management,'' addresses national allocations and national program accountability. Overall, the changes in this section were changes in terminology, rather than changes in policies and procedures. NRCS replaces the terms, ''beginning farmers and rancher'' and ''limited resource producer,'' with the term, ''historically underserved producer.'' NRCS has revised its allocation process to integrate all performance-based funding with initial allocations each year. This change eliminates the need for a national reserve; therefore, the ''national reserve'' reference is removed.

Section 1466.6, ''State allocation and management,'' is an existing section that describes State Conservationists' responsibilities in the allocation of funds and the implementation of the program. This section was revised in an effort to streamline terminology among NRCS-administered programs and make existing terminology consistent with the 2008 Act amendments.

Section 1466.7, ''Outreach activities,'' describes how NRCS will establish special program outreach activities at the national, State, and local levels. While NRCS has made efforts to extend its outreach to limited resource, beginning, and socially disadvantaged farmers and ranchers that include tribes, this section is revised to clarify the Agency outreach activities, and to specifically emphasize the need to provide assistance to ''socially disadvantaged farmers or ranchers'' as defined in § 1466.3 and the 2008 Act amendments.

Section 1466.8, ''Program requirements,'' sets forth land and applicant eligibility and the amount of EQIP funding to be used for livestock production, beginning farmers and ranchers, and socially disadvantaged farmers and ranchers. Producer associations and farmer cooperatives may submit applications, plans, and other necessary program materials on behalf of producers. However, eligibility and contract requirements still apply to any participant as set forth in § 1466.8. Specifically, § 1466.8 is revised as follows:

In paragraph (a) the term ''nonindustrial private forest land'' is included. Within this paragraph, NRCS eliminates the term, ''land use adjustments,'' leaving the more inclusive term, ''conservation practices.'' In paragraph (b)(2), NRCS replaces the term ''farming operation'' with the term ''agricultural operation,'' which is defined in § 1466.3. In paragraph (b)(4), a participant may substitute a plan developed for the purposes of acquiring an air or water quality permit for an EQIP plan of operations, provided the former plan contains elements equivalent to those elements required by an EQIP plan of operations.

NRCS moves provisions in § 1466.24 to § 1466.8 to better organize the participant's requirements. As a result, paragraph (b)(6) is inserted in § 1466.8, which requires a person or legal entity to submit to NRCS its tax identification or unique identifier number when applying for EQIP assistance. Where applicable, American Indians, Alaska Natives, and Pacific Islanders may use another unique identifier for each individual eligible for payment.

NRCS revises paragraph (c) to further clarify EQIP's working landscape to include non-industrial private forestland, and other land on which agricultural products, forest-related products, and livestock are produced. These areas are identified in the 2008 Act's amendment of eligible lands and in the program's purposes. Other agricultural lands include cropped woodland, marshes, incidental areas included in the agricultural operation, and other types of agricultural land used for production of livestock. Within paragraph (c), NRCS also clarifies that publicly owned land is eligible if it is an actively managed component of the agricultural and forestry operation and

the conservation practice contributes to an improvement in an identified resource concern that is located on private land. To demonstrate adequate control of the land, members of Indian tribes should provide valid Tribal documentation and or documentation from the BIA. The BIA may assist NRCS with acquiring the appropriate authorization from the ''certified'' owners.

Within paragraph (c), the term, ''operating unit'' is replaced with the term, ''agricultural operation,'' and the term, ''natural,'' was eliminated in an effort to create consistent terminology among the conservation programs administered by NRCS.

Paragraph (e) has been inserted to ensure that five percent of the funds will be allocated to assist socially disadvantaged farmers or ranchers and an additional five percent of the funds will be allocated to assist beginning farmers or ranchers. In implementing the statutory change, NRCS considered three ways to allocate funds to meet the 2008 Act's requirements: (1) Issuing the allocations at the National level to defined geographic areas, where such groups are prevalent; (2) issuing the allocations to each State; or (3) establishing a national target that conforms to the statutory language, but providing States flexibility to designate money to each specified group based on potential demand in a given State. Under Option 3, NRCS pools the money and establishes a ten percent target for each State, enabling State Conservationists to designate money to the specified groups based on potential demand. NRCS has selected Option 3 to ensure that nationwide these groups of producers will benefit from EQIP assistance. Similar to EQIP's national livestock target, overall State-level percentages will be tracked at the national level to ensure that the amended national goals are met.

The effect of allocating the funds at the State level, with the targets being monitored at the national level will be threefold: (1) Funds will be provided to applicants who may be in the greatest need for additional assistance; (2) priority resource concerns may be better addressed; and (3) NRCS will assure that the national targets for these groups are met.

Section 1466.9, ''EQIP plan of operations,'' describes the requirements of the EQIP plan of operations, which is a component of the EQIP contract. Producers will be required to develop and apply a plan of operations that addresses identified priority resource concerns. The producer develops the plan of operations with the assistance of NRCS or other public or private technical service providers. The majority of this section has remained the same, with the following exceptions:

Paragraph (a) is revised to accommodate for the expansion of the term, ''conservation practice,'' which includes conservation planning activities. All conservation practices must be carried out in accordance with NRCS technical guidance. This technical guidance includes, but is not limited to, the NRCS FOTG, National Planning Procedures Handbook, General Manual 180, Part 409, Conservation Planning Policy, and other appropriate technical guidance as determined by the State Conservationist or designated conservationist.

Paragraph (c)(2) is revised by adding the term, ''natural resource,'' when listing a participant's potential objectives. Specifically (c)(2) is revised as follows: ''To the extent practicable, the quantitative or qualitative goals for achieving the participant's conservation, natural resource, and environmental objectives.''

Paragraph (d) of the former program regulation is moved to paragraph (b) of this interim final rule to clarify the participant's responsibilities as they relate to the EQIP plan of operations. Paragraph (b) states that it is the participant's responsibility to implement the EQIP plan of operations.

Paragraph (c) details the elements required in an EQIP plan of operations. Paragraph (c)(3) is also revised to accommodate the expansion of the term ''conservation practice'' by the 2008 Act amendments, which now includes activities such as conservation planning, design, and installation. An EQIP plan of operations may be made up of one or more conservation practices such as those activities listed above, in addition to structural, land management, vegetative, and forestry practices. Paragraph (c)(4) is revised to clarify that the EQIP plan of operations must include operation and maintenance, as well as timing and sequence of conservation practices.

Paragraph (e) is added to ensure that producers who address forestland in their EQIP plan of operations develop and implement a forest management plan that is approved by the State Conservationist. As defined in § 1466.3, a forest management plan is a site-specific plan that is compatible with the participant's objectives and identifies and describes actions to be taken by the participant to conserve and enhance soil, water, air, fish, and wildlife resources on such land. The forest management plan should be developed to comply with Federal, State, Tribal, and local laws, regulations, and permit requirements.

NRCS inserts paragraph (f) to specify criteria to evaluate acceptable watershed-wide projects for the purposes of implementing water conservation or irrigation practices on newly irrigated lands, in accordance with section 1240B(h) of the 1985 Act. In determining an acceptable watershed-wide project, the State Conservationist will ensure:

- The project area has a current, comprehensive water resource assessment;
- The project plan has demonstrated effective water conservation and management strategies; and
- The project sponsors have consulted with relevant State, Tribal, and local agencies.

NRCS proposes to use the watershed assessments and State, Tribal, and local agency consultation in order to ensure that conservation practices implemented under EQIP are not in conflict with Federal, State, Tribal, and local water laws. The additional criteria also help to ensure that conservation practices are not applied to the detriment of other resource concerns within that watershed. For example, additional criteria may include, but is not limited to: Concurrence by State and local water management agencies that the anticipated activities will not be a detriment to existing resources; concurrence from State fish and wildlife agencies that the land can be irrigated with no detriment to in-stream flow for aquatics; and verification that the appropriate water permits have been acquired. *NRCS is interested in comments on the criteria for determining acceptable watershed-wide projects, particularly with respect to what should be included in a comprehensive water resource assessment and what should be considered in determining effective water conservation and management strategies at the watershed scale.*

Section 1466.10, ''Conservation practices,'' describes how NRCS determines eligible conservation practices. The State Conservationist determines which conservation practices are eligible for payment and the maximum payment rates in the State. The State Conservationist may limit practice eligibility in some localities depending on the resource concerns. Throughout this section, to reflect statutory changes, NRCS replaces terms, such as ''structural and land management practices,'' and ''cost-share and incentive payments,'' with more inclusive terms, like ''conservation

practices'' and ''payments,'' respectively.

NRCS deletes the former program regulation's paragraph (b), which prohibits payments for practices applied before application for participation has been made and combines it with paragraph (c), since a practice applied prior to application is a practice applied prior to contract approval. Payments will not be made for a conservation practice that was applied prior to program application or contract approval, unless a waiver is granted by the State Conservationist or designated conservationist prior to implementation of the conservation practice.

In paragraph (c), NRCS adds the term, ''water conservation,'' to clarify EQIP's purposes, as follows: ''A participant will be eligible for payments for water conservation and irrigation related conservation practices only on land that has been irrigated for two of the last five years prior to application for assistance.''

To reflect the 2008 Act's expansion of the term, ''conservation practices,'' NRCS includes the term, ''management approaches,'' in paragraph (d). NRCS revises paragraph (d) as follows: ''Where new technologies or management approaches that provide a high potential for optimizing environmental benefits have been developed, NRCS may approve interim conservation practice standards that incorporate new technologies and provide financial assistance for pilot work to evaluate and assess the performance, efficacy, and effectiveness of the new technology or management approach.''

Section 1466.11, ''Technical services provided by qualified personnel not affiliated with USDA,'' was added in the 2003 final rule to address technical assistance provided by non-USDA personnel. NRCS is authorized to use Federal, State, or local agencies, or private entities to provide technical assistance. As determined by the State Conservationist, NRCS may contract with private vendors or enter cooperative agreements with other Federal, State, or local entities for services related to EQIP implementation.

Throughout this section, the term, ''technical services,'' replaces the phrase, ''and other assistance,'' to make this regulation consistent with the 2008 Act's amendment that added the definition of ''technical services.'' Section 1201(a)(25) of the 1985 Act, as amended by Section 2001 of the 2008 Act, defines ''technical services'' as ''conservation planning, technical consultation, and assistance with design and implementation of conservation practices.'' In light of this statutory change, § 1466.11(b) is revised as follows: ''Participants may use technical services from qualified personnel of other Federal, State, and local agencies, Indian tribes, or individuals who are certified as TSPs by NRCS.''

Using the same rationale as applied to paragraph (b), paragraph (c) is revised as follows: ''Technical services provided by qualified personnel not affiliated with USDA may include, but are not limited to: Conservation planning; conservation practice survey, layout, design, installation, and certification; information, education; and training for producers.''

Subpart B—Contracts and Payments

Section 1466.20, ''Application for contracts and selecting offers from producers,'' is revised to split into two separate paragraphs, (a) ''application acceptance'' and (b) ''selecting offer,'' to better clarify these policies. The revisions to this section are a result of both statutory and streamlining changes.

Paragraph (a) clarifies that EQIP applications will be accepted throughout the year, with the State Conservationist or designated conservationist ranking applications at selected times throughout the year. Paragraphs (a)(2) and (3) have been inserted to enable the State Conservationist to group and rank applications that share similar resource objectives, economic status, cultural, or sociological backgrounds. In the case of paragraph (a)(2), the 2008 Act amendment requires the State Conservationist or designated conservationist, where practicable, to group applications based on the type of agricultural operation and rank accordingly. NRCS may extend this idea beyond agricultural operations to encourage the State Conservationist or designated conservationist to establish Statewide, area-wide, or local ranking pools. Applications may be grouped within ranking pools, which may be created to address a specific resource concern, a specific geographic area, a specific type of agricultural operation, or a specific group of applications that complete conservation systems. Spatially, ranking pools may be centered around a wildlife migration corridor, watershed, airshed, or other area of special significance. In the case of ranking pools, applications that meet the criteria established by the State Conservationist or designated conservationist, with advice from the State Technical Committee and local working group, where appropriate, will be evaluated against other applications that meet the same criteria. Each application will be ranked accordingly within that ranking pool or grouping of applications.

The ranking pools streamline conservation program delivery, enabling producers to receive conservation assistance in a more expedited manner. For example, the State Conservationist may announce an initiative to protect a specific at-risk species or a resource, such as a municipal water supply, and designate a specified funding amount available to producers within the State or a designated region. Applicants may apply by proposing specific conservation practices that would create habitat for this at-risk species or protect the drinking water source. Applications that address this specific resource concern within the State or region would be evaluated against other applications and funded accordingly.

Paragraph (b) details how applications will be prioritized. When selecting EQIP applications, the State Conservationist or designated conservationist, with advice from the State Technical Committee or local working group, respectively, will develop a ranking process to prioritize applications for funding that addresses national, State, Tribal, and local priority resource concerns. NRCS will select applications that fulfill the program purposes, address the priority resource concern and offer significant environmental benefit. In developing this ranking process, NRCS will expand its focus to include energy conservation, in addition to the traditional resource concerns that include: Soil, water and air quality; wildlife habitat; and surface and groundwater conservation. To reflect the statutory intent and ensure both timely and effective conservation improvements, NRCS has expanded the selection criteria to give priority to applications that:

- Indicate a willingness by the applicant to complete all conservation practices in an expedited manner;
- Effectively and comprehensively address the designated resource concern or resource concerns; and
- Improve existing conservation practices or improve and complete a conservation system. To be eligible for higher ranking for this criterion, these existing practices or systems shall be in place at the time the contract offer is accepted.

For applications that include water conservation or irrigation efficiency conservation practices, the 2008 Act amendment also requires NRCS to give priority to applications that demonstrate a reduction in water use by the agricultural operation. As a condition of receiving a higher ranking within the

grouping of water conservation applications, the producer agrees not to use any associated water savings to bring new land under irrigation production, excluding incidental land needed for efficient operations. A producer who brings new land under irrigation production may be excluded from this condition, if the producer is participating in a watershed-wide project that will effectively conserve water. In evaluating whether a watershed-wide project is acceptable, the State Conservationist will ensure that:

- The project area has a current, comprehensive water resource assessment;
- The project plan has demonstrated effective water management strategies; and
- The project sponsors have consulted relevant State, Tribal, and local agencies.

The ultimate fate of associated water savings from water conservation or irrigation efficiency conservation practices depend on State water laws. NRCS does not have authority over State water rights and laws. The saved water could remain in the stream, provide aquifer recharge, or be utilized by another agricultural producer with more junior water rights. In essence, once the water leaves the agricultural operation, overall in-stream flow or aquifer recharge may be impacted by other sources.

Section 1466.20 also addresses contract approval authority. NRCS is revising § 1466.20 to require the appropriate Regional Assistant Chief to approve all contracts that exceed $150,000 and are up to $300,000.

Section 1466.21, ''Contract requirements,'' identifies elements contained within an EQIP contract and the responsibilities of the participant who is party to the EQIP contract. This section also addresses EQIP contract funding limitations. To receive payment, an applicant must enter into an EQIP contract. Generally, the EQIP contract identifies all conservation practices to be implemented, their timing and sequence, and the operation and maintenance needed to maintain the conservation practice for its lifespan. As a condition of receiving EQIP payments for forestry-related practices, the 2008 Act amendments require a participant to have a forest management plan. To address this requirement, NRCS revises paragraph (b) to state that the participant must implement a forest management plan when the EQIP plan of operations addresses nonindustrial private forest land. The forest management plan will be developed in accordance with the NRCS FOTG requirements and will comply with Federal, State, Tribal, and local laws, regulations, and permits.

NRCS continues to use a contract funding limitation to manage the program. In the past, NRCS has limited the contract amount to reflect the person/legal entity payment limitation. Prior to the 2008 Act, the contract and payment limitations were each $450,000. NRCS retains the practice of limiting the contract amount to the person/legal entity payment limitation for ease in recordkeeping and for facilitating situations where a waiver up to $450,000 may be granted. As required by the 2008 Act, paragraph (d) is revised to reduce the contract funding limitation from $450,000 to $300,000. NRCS also specifies in paragraph (d) that this contract funding limitation may be waived for projects of special environmental significance. Projects of special environmental significance must meet the following criteria, as determined by the Chief:

- Site-specific evaluation documents have been completed, documenting that the project will have substantial positive impacts on critical resources in or near the project area (*e.g.*, impaired water bodies, at-risk species, drinking water supplies, or air quality attainment);
- The project clearly addresses a national priority and State, Tribal, or local priorities; and
- The project assists the participant in complying with Federal, State, Tribal, and local regulatory requirements.

NRCS is also extending the policy of establishing a contract funding limitation to organic contracts. Participants who wish to enter into ''organic-only'' contracts are subject to a statutory annual payment limitation of $20,000 per year or $80,000 during any six-year period. These contract limitations will be instituted for ease in recordkeeping. However, participants who operate both organic and non-organic operations will be encouraged to have separate contracts for their non-organic and organic operations. Producers wanting to implement practices outside of their organic operations may enter into another contract, but will be subject to the overall $300,000 person or legal entity payment limitation for all EQIP contracts. Both certified organic producers and those transitioning to an organic production system will have equal access for priority assistance. NRCS will encourage applicants to consolidate those conservation practices most directly related to organic production into a single contract to optimize the use of funding within both the annual and six-year payment limits.

Section 1466.22, ''Conservation practice operation and maintenance,'' addresses the participant's responsibility for conservation practice operation and maintenance. Paragraphs (a) through (e) are revised to clarify that the O&M agreement is part of the EQIP contract. The O&M agreement specifies the terms and conditions under which the participant must operate and maintain the conservation practices installed with EQIP assistance. This section also clarifies that NRCS may periodically inspect conservation practices to ensure they are being maintained for the conservation practice lifespan as detailed in the O&M agreement. In the event that NRCS finds that a participant is not operating and maintaining practices for the specified lifespan during the contract duration, NRCS may request a refund of payments in accordance with the EQIP contract. If a conservation practice is continuing to function for the conservation purposes for which it was installed, NRCS may choose to not request a payment refund. NRCS has created an O&M agreement to articulate the Agency's expectation that the participant is responsible for maintaining each conservation practice. NRCS has developed this O&M agreement for two reasons: (1) To increase the transparency of a participant's contract responsibilities; (2) to ensure these conservation practices are maintained for the length of time for which they were designed and created.

Section 1466.23, ''Payment rates and levels,'' formerly addressed cost-share rates, incentive payment levels, and payment eligibility. Incentive payments have been removed in accordance with the 2008 Act amendments. In the place of incentive payments, participants will receive payments for estimated costs incurred or income foregone in implementing a practice. The terms ''cost-share payments'' and ''incentive payments'' have been replaced throughout this section with the more inclusive term, ''payments.'' Specifically, NRCS has revised the following paragraphs:

The original paragraph (c) becomes paragraph (a); as a result, paragraphs are realigned accordingly. NRCS revises paragraph (a) to clarify how eligible conservation practices will be selected. In developing a list of conservation practices eligible for payment, the State Conservationist, in consultation with the State Technical Committee, will examine the cost-effectiveness, implementation efficiency, and longevity of the conservation practice.

NRCS will select a conservation practice based on the number of resource concerns the conservation practice will address or how comprehensively the conservation practice will address the resource concern and its ability to assist producers in meeting regulatory requirements.

NRCS revises paragraph (b) to specify that payment rates will be established by the State Conservationist or designee, with advice from the State Technical Committee or local working group. In determining the payment rate, NRCS will use the guidance found in paragraph (c), in addition to examining the cost of implementing a practice.

Paragraphs (c)(1) and (2) are revised to allow participants to receive: (i) Up to 75 percent of the estimated costs incurred by implementing a conservation practice, (ii) up to 100 percent of the estimated income foregone by participant for implementing a practice, or both (i) and (iii) where a producer incurs both costs in implementing a conservation practice and foregoes income related to practice implementation. When determining estimated income foregone, the State Conservationist, as specified in section 1240B(d)(3) of the 1985 Act, may provide a higher payment rate, provided the rate does not exceed 100 percent, to the following conservation practices: residue management, nutrient management, air quality management, invasive species management, pollinator habitat, animal carcass management technology, or pest management. In accordance with this paragraph, a producer simultaneously may receive payments for performing a practice, as well as income foregone for implementing such a practice.

For participants who are identified as historically underserved producers, in accordance with § 1466.3, NRCS may award the applicable payment rate and an additional payment rate that is not less than 25 percent above the applicable payment rate, provided this increase does not exceed 90 percent of the estimated incurred costs associated with the conservation practice.

NRCS also revises paragraph (c)(3) to clarify that payments made to a participant will be reduced proportionately below the rate established by the State Conservationist or designated conservationist to the extent that the total financial contributions for a conservation practice from other sources exceed 100 percent of the estimated costs incurred for implementing or performing the conservation practice.

Paragraph (c)(4) is inserted to reflect Congress's intent to provide payments for conservation practices that assist producers in organic production or transition to organic production. Paragraph (c)(4) also clarifies that payments may not be made to cover the costs associated with acquiring the actual organic certification.

NRCS removes the former program regulations' reference to NRCS providing incentive payments, in accordance with the 2008 Act, which also removed references to incentive payments. NRCS will reimburse participants for estimated costs incurred and income foregone in accordance with § 1466.23(c).

NRCS adds paragraph (e) to enable NRCS to adjust payment for conservation practices scheduled after the year of contract obligation. Inflation, higher fuel costs, and increased labor impact the cost of implementing a conservation practice. This provision provides the Agency flexibility to compensate participants based on the increased costs.

Section 1466.24, ''EQIP payments,'' provides direction on payment eligibility and payment limitations. Section 1240G of the 1985 Act, as amended by Section 2508 of the 2008 Act limits payments to persons, joint operations, or legal entities to $300,000 during any six-year period, except for projects having special environmental significance. For projects of special environmental significance, payments will be limited to $450,000 (during any six-year period). In order to ensure that no individual will receive more than $300,000 (unless a waiver up to $450,000 is granted), NRCS will track all EQIP funds paid and attributable to any individual by the social security identification number or unique identification number. To participate in EQIP, the person or legal entity's application must contain all members or beneficiaries, their tax identification numbers, and the percentage interest of each member or beneficiary. The BIA, as a fiduciary, may assist NRCS in distributing funds to individual Indians or Indian tribes. With regard to contracts on Indian land, payments exceeding the payment limitation may be made to the Tribal participant if an official of BIA or a Tribal official certifies in writing that no one individual, directly or indirectly, will receive more than the limitation.

For the purposes of applying the payment limitation and in accordance with the 2008 Act, the six-year period will include those payments made in fiscal years 2009 through 2014. NRCS will honor payment and contract limits that exceed $300,000 for those persons, joint operations, and legal entities that entered into a contract with NRCS prior to October 1, 2008. Contracts entered into prior to October 1, 2008, are governed by the payment limitations contained within the 2002 Act. The 2002 Act limited payments and contracts to $450,000. The 2008 Act reduced the payment limit to $300,000. NRCS will apply these new statutory and regulatory limitations, beginning with fiscal year 2009 contracts and will ensure that no new participants exceed the $300,000 limit during the effectiveness of the 2008 Act. Contracts entered into prior to October 1, 2008 are not affected by the revision in payment limitation. Specifically, the following provisions have been changed in this section.

Paragraph (a) is revised to reduce the person, joint operation, or legal entity payment limitation from $450,000 to $300,000. This payment limitation applies to the six-year period, following a participant entering into a contract with NRCS, starting the year the contract is signed. Payments received for technical assistance shall be excluded from this limitation. The person, joint operation, or legal entity payment limitation may be waived for projects of special environmental significance. Projects of special environmental significance must meet the following criteria, as determined by the Chief:

- The project will have substantial positive impacts on critical resources in or near the project area (*e.g.*, impaired water bodies, at-risk species, or air quality attainment);
- The project clearly addresses a national and State, Tribal, or local priorities; and
- The project assists the participant in complying with Federal, State, or local regulatory requirements.

Paragraph (c) is inserted to reflect the 2008 Act's limitation on payments to a person or legal entity, directly or indirectly, for conservation practices related to organic production. Payments for practices related to organic production shall not exceed $20,000 per year or $80,000 during any six-year period. This limitation excludes payments related to technical assistance and pertains only to conservation practices applied related to organic production. A producer may receive additional payments and is not subject to the organic payment limitation for conservation practices performed outside of those related to organic production, provided the sum total of all payments received does not exceed $300,000 (unless a waiver is granted for an environmentally significant project).

NRCS revises paragraph (d) to reflect the statutory requirement that

participants who wish to receive payments for conservation practices related to organic production or the transition to organic production must carry out an organic system plan, as defined in section 1466.3, or develop and implement conservation practices for certified organic production that are consistent with an organic system plan and with EQIP's purposes. NRCS will offer conservation planning assistance to producers with an interest in organic production as authorized in section 1240B(i) of the 1985 Act, as amended by section 2503 of the 2008 Act.

Paragraph (d) is further revised to enable the Agency to provide advance payments to historically underserved producers, as provided in the 2008 Act amendments. Prior to this revision, EQIP policy required a participant to certify that a conservation practice had been completed before NRCS approved or issued payments. However, due to financial hardship by some applicants, the 1985 Act has been amended to enable ''historically underserved producers'' to receive advance payments up to 30 percent of the amount needed to implement a conservation practice for the purpose of purchasing needed materials or services. The advance payments will assist participants who lack financial resources to participate in the program.

Paragraph (d)(6) addresses the provisions related to the Adjusted Gross Income Limitation as it applies to conservation programs. Section 1001D of the Food Security Act of 1985, as amended by section 1604 of the 2008 Act, provides that a person, joint operation, or legal entity shall not be eligible to receive any payments from conservation programs under Title XII of the 1985 Act and section 524(b) of the Federal Crop Insurance Act (7 U.S.C. 1524(b)), which includes EQIP, during a crop, fiscal, or program year, if the average adjusted gross income of the individual, joint operation, or legal entity exceeds $1,000,000, unless not less than 66.66 percent of the average adjusted gross income of the person, joint operation, or legal entity is average adjusted gross farm income. This provision of the 1985 Act will be implemented in accordance with part 1400 of this chapter. Since NRCS will be making a commitment for payments under an EQIP contract for a period of time into the future, NRCS will make a one-time eligibility determination in accordance with part 1400 of this chapter. These limitations do not extend to federally recognized Indian tribes.

Paragraph (d)(12) is revised to reflect the expansion of the term ''conservation practice.'' NRCS or other Technical Service Providers must certify that the conservation practice has been carried out in accordance with NRCS technical guidance. This technical guidance includes, but is not limited to, the NRCS FOTG, National Planning Procedures Handbook, General Manual 180, Part 409, ''Conservation Planning Policy,'' and other technical guidance as determined by the State Conservationist or designated conservationist.

Section 1466.24(d)'s provisions related to depriving tenants and sharecroppers of EQIP payments is moved to § 1466.35, since the provision pertains directly to misrepresentation, scheme, and device, which is addressed in § 1466.35.

Section 1466.25, ''Contract modifications and transfers of land,'' is revised to clarify the participant's contract responsibilities as they relate to loss of control of the land and the obligations incurred by the transferee. In detailing these obligations, NRCS also states that the participant and transferee assume the obligations not only of the contract, but also the O&M agreement. This section also promulgates NRCS's pre-existing policy by adding paragraph (e), which specifies that if a conservation practice fails through no fault of the participant, the State Conservationist may issue payments to re-establish the practice.

Section 1466.26, ''Contract violations and termination,'' addresses the procedures that NRCS should take when a violation has occurred or a contract termination is needed. Specifically, § 1466.26 is revised as follows:

Paragraph (a) has been inserted to promulgate existing contract requirements and specify that the State Conservationist may terminate a contract when it is in the public interest, when the participant fails or refuses to correct a contract violation, or when a termination is needed as a result of conditions beyond the participant's control. The State Conservationist may unilaterally terminate an agreement when a termination is in the public interest, the participant refuses to correct a violation, or the participant is unable to comply with the contract terms. In the event a contract is terminated, the State Conservationist has the ability to retrieve all or a proportion of the payments. When a participant claims that the reason for the violation is a form of hardship, the claim must be documented and have existed after the participant entered into the contract. When a participant makes a hardship claim, the participant will provide documentation that details the hardship and for how long the hardship has existed and why the hardship has prevented fulfilling requirements of the contract. Examples of hardship include: Natural disasters, major illness, farm or ranch building destruction, bankruptcy, and public interest (*e.g.*, military service, public utilities' easement or condemnation of land, or environmental and archeological concerns).

Paragraph (e) notifies potential EQIP participants that NRCS has the ability to collect liquidated damages. Paragraph (e) also gives notice to the public that participants who violate EQIP contracts may be determined ineligible for future NRCS-administered conservation program funding. For clarity, the following provisions are moved to paragraph (e), ''If NRCS terminates a contract, the participant will forfeit all rights for future payments under the contract and may be required to pay liquidated damages as prescribed in the contract, and refund all or part of the payments received, plus interest.'' NRCS also revises paragraph (e)(2) to provide flexibility to either reduce or waive the amount of liquidated damages.

NRCS adds paragraph (e)(2)(i) to clarify that proof of hardship must be documented, and such hardship must have occurred after the contract was signed by both parties.

NRCS adds paragraph (f) to provide that a contract, under which a producer is receiving payments for conservation practices related to organic production, may be terminated, if the State Conservationist, in consultation with the State Technical Committee, determines that the producer is not pursuing organic certification or is decertified.

Section 1466.27, ''Conservation Innovation Grants,'' is amended to stipulate that NRCS will not reimburse the grantee for indirect costs. The bulk of CIG's policies and procedures were revised on January 3, 2005, and promulgated in § 1466.27. To locate information about this program, consult the NRCS Web site at: *http://www.nrcs.usda.gov/programs/cig/*.

Subpart C—General Administration

Section 1466.31, ''Compliance with regulatory measures,'' is revised by adding the term, ''permits,'' to clarify that it is the participant's responsibility to obtain necessary permits before commencing or carrying out conservation practices.

Section 1466.32, ''Access to operating unit,'' is revised to notify potential EQIP applicants that an authorized NRCS representative may enter an operating unit or tract for the purpose of confirming compliance with program requirements during the term of the

contract. NRCS will continue to provide the participant with notice, prior to entering the property.

Section 1466.33, ''Equitable relief,'' remains unchanged.

Section 1466.34 is revised to add the term, ''legal entity,'' to clarify that legal entities shall be subject to the same provisions as persons.

Section, 1466.35, ''Misrepresentation and scheme or device,'' is revised to insert the following clause from § 1466.24, ''Adopted any scheme or device for the purpose of depriving any tenant or sharecropper of the payments to which such person would otherwise be entitled under the program.''

Section 1466.36, ''Environmental Credits for Conservation Improvements,'' is added to clarify NRCS's interest in environmental credits. NRCS recognizes that environmental benefits will be achieved by implementing conservation practices funded through EQIP, and that environmental credits may be gained as a result of implementing activities compatible with the purposes of an EQIP contract. NRCS asserts no direct or indirect interest in these credits. However, NRCS retains the authority to ensure that operation and maintenance requirements for EQIP-funded improvements are met, consistent with § 1466.21 and § 1466.22. Where activities may impact the land under an EQIP contract, participants are highly encouraged to request an O&M compatibility determination from NRCS prior to entering into any credit agreements.

Section 2708, ''Compliance and Performance'', of the 2008 Act added a paragraph to section 1244(g) of the 1985 Act entitled, ''Administrative Requirements for Conservation Programs,'' which states the following:

''(g) Compliance and performance.—For each conservation program under Subtitle D, the Secretary shall develop procedures—

''(1) To monitor compliance with program requirements;

''(2) To measure program performance;

''(3) To demonstrate whether long-term conservation benefits of the program are being achieved;

''(4) To track participation by crop and livestock type; and

''(5) To coordinate activities described in this subsection with the national conservation program authorized under section 5 of the Soil and Water Resources Conservation Act of 1977 (16 U.S.C. 2004).''

This new provision presents in one place the accountability requirements placed on the Agency as it implements conservation programs and reports on program results. The requirements apply to all programs under Subtitle D, including the Wetlands Reserve program, the Conservation Security Program, the Conservation Stewardship Program, The Farm and Ranch Lands Protection Program, the Grassland Reserve Program, the Environmental Quality Incentives Program (including the Agricultural Water Enhancement Program), the Wildlife Habitat Incentive Program, and the Chesapeake Bay Watershed initiative. These requirements are not directly incorporated into these regulations, which set out requirements for program participants. However, certain provisions within these regulations relate to elements of section 1244(g) of the 1985 Act and the Agency's accountability responsibilities regarding program performance. NRCS is taking this opportunity to describe existing procedures that relate to meeting the requirements of section 1244(g) of the 1985 Act, and Agency expectations for improving its ability to report on each program's performance and achievement of long-term conservation benefits. Also included is reference to the sections of these regulations that apply to program participants and that relate to the Agency accountability requirements as outlined in section 1244(g) of the 1985 Act.

Monitor compliance with program requirements. NRCS has established application procedures to ensure that participants meet eligibility requirements, and follow-up procedures to ensure that participants are complying with the terms and conditions of their contractual arrangement with the government and that the installed conservation measures are operating as intended. These and related program compliance evaluation policies are set forth in Agency guidance (M_440_512 and M_440_515 (*http://directives.sc.egov.usda.gov/*).

The program requirements applicable to participants that relate to compliance are set forth in these regulations in § 1466.8, ''Program Requirements,'' § 1466.9, ''EQIP Plan of Operations,'' § 1466.21, ''Contract requirements,'' and § 1466.22, ''Conservation practice operation and maintenance.'' These sections make clear the general program eligibility requirements, participant obligations for implementing an EQIP plan of operations, participant contractual obligations, and requirements for operating and maintaining EQIP-funded conservation improvements.

Measure program performance. Pursuant to the requirements of the Government Performance and Results Act of 1993 (Pub. L. 103–62, Sec. 1116) and guidance provided by OMB Circular A–11, NRCS has established performance measures for its conservation programs. Program-funded conservation activity is captured through automated field-level business tools and the information is made publicly available at: *http://ias.sc.egov.usda.gov/PRSHOME/*. Program performance also is reported annually to Congress and the public through the annual performance budget, annual accomplishments report, and the USDA Performance Accountability Report. Related performance measurement and reporting policies are set forth in Agency guidance (GM_340_401 and GM_340_403 (*http://directives.sc.egov.usda.gov/*)).

The conservation actions undertaken by participants are the basis for measuring program performance—specific actions are tracked and reported annually, while the effects of those actions relate to whether the long-term benefits of the program are being achieved. The program requirements applicable to participants that relate to undertaking conservation actions are set forth in these regulations in § 1466.9, ''EQIP Plan of Operations,'' § 1466.21, ''Contract requirements,'' and § 1466.22, ''Conservation practice operation and maintenance.'' These sections make clear participant obligations for implementing, operating, and maintaining EQIP-funded conservation improvements, which in aggregate result in the program performance that is reflected in Agency performance reports.

Demonstrate whether long-term conservation benefits of the program are being achieved. Demonstrating the long-term natural resource benefits achieved through conservation programs is subject to the availability of needed data, the capacity and capability of modeling approaches, and the external influences that affect actual natural resource condition. While NRCS captures many measures of ''output'' data, such as acres of conservation practices, it is still in the process of developing methods to quantify the contribution of those outputs to environmental outcomes.

NRCS currently uses a mix of approaches to evaluate whether long-term conservation benefits are being achieved through its programs. Since 1982, NRCS has reported on certain natural resource status and trends through the National Resources Inventory (NRI), which provides statistically reliable, nationally consistent land cover/use and related

natural resource data. However, lacking has been a connection between these data and specific conservation programs.[3] In the future, the interagency Conservation Effects Assessment Project (CEAP), which has been underway since 2003, will provide nationally consistent estimates of environmental effects resulting from conservation practices and systems applied. CEAP results will be used in conjunction with performance data gathered through Agency field-level business tools to help produce estimates of environmental effects accomplished through Agency programs, such as EQIP. In 2006 a Blue Ribbon panel evaluation of CEAP[4] strongly endorsed the project's purpose but concluded ''CEAP must change direction'' to achieve its purposes. In response, CEAP has focused on priorities identified by the Panel and clarified that its purpose is to quantify the effects of conservation practices applied on the landscape. Information regarding CEAP, including reviews and current status, is available at *http://www.nrcs.usda.gov/technical/NRI/ceap/*. Since 2004 and the initial establishment of long-term performance measures by program, NRCS has been estimating and reporting progress toward long-term program goals. Natural resource inventory and assessment, and performance measurement and reporting policies set forth in Agency guidance (GM_290_400; GM_340_401; GM_340_403)) (*http://directives.sc.egov.usda.gov/*).)

Demonstrating the long-term conservation benefits of conservation programs is an Agency responsibility. Through CEAP, NRCS is in the process of evaluating how these long-term benefits can be achieved through the conservation practices and systems applied by participants under the program. The program requirements applicable to participants that relate to producing long-term conservation benefits are described previously under ''measuring program performance,'' *i.e.*, § 1466.9, ''EQIP Plan of Operations,'' § 1466.21, ''Contract requirements,'' and § 1466.22, ''Conservation practice operation and maintenance.''

Track participation by crop and livestock type. NRCS's automated field-level business tools capture participant, land, and operation information. This information is aggregated in the National Conservation Planning database and is used in a variety of program reports, for example in validating the program requirement for ensuring that 60 percent of funds are directed toward conservation practices related to livestock production. Additional reports will be developed to provide more detailed information on program participation to meet congressional needs. These and related program management procedures supporting program implementation are set forth in Agency guidance (M_440_512 and M_440_515).

The program requirements applicable to participants that relate to tracking participation by crop and livestock type are put forth in these regulations in § 1466.8, ''Program Requirements,'' which makes clear program eligibility requirements, including eligible land and relationship to the production of agricultural, livestock, or forest-related products.

Coordinate these actions with the national conservation program authorized under the Soil and Water Resources Conservation Act (RCA). The 2008 Act reauthorized and expanded on a number of elements of the RCA related to evaluating program performance and conservation benefits. Specifically, the 2008 Farm Bill added a provision stating,

> ''Appraisal and inventory of resources, assessment and inventory of conservation needs, evaluation of the effects of conservation practices, and analyses of alternative approaches to existing conservation programs are basic to effective soil, water, and related natural resources conservation.''

The program, performance, and natural resource and effects data described previously will serve as a foundation for the next RCA, which will also identify and fill, to the extent possible, data and information gaps. Policy and procedures related to the RCA are set forth in Agency guidance (GM_290_400; M_440_525; GM_130_402) (*http://directives.sc.egov.usda.gov/*).

The coordination of the previously described components with the RCA is an Agency responsibility and is not reflected in these regulations. However, it is likely that results from the RCA process will result in modifications to the program and performance data collected, to the systems used to acquire data and information, and potentially to the program itself. Thus, as the Secretary proceeds to implement the RCA in accordance with the statute, the approaches and processes developed will improve existing program performance measurement and outcome reporting capability and provide the foundation for improved implementation of the program performance requirements of section 1244(g) of the 1985 Act.

List of Subjects in 7 CFR Part 1466

Agricultural operations, Conservation practices, Conservation payments, Natural resources, Payment rates, Contract, Animal feeding operations, Soil and water conservation, Soil quality, Water quality and water conservation, Wildlife, Forestry management.

■ For the reasons stated in the preamble, the Commodity Credit Corporation amends Part 1466 of Title 7 of the Code of Federal Regulations as follows:

PART 1466—ENVIRONMENTAL QUALITY INCENTIVES PROGRAM

■ 1. The authority citation for part 1466 continues to read as follows:

Authority: 15 U.S.C. 714b and 714c; 16 U.S.C. 3839aa–3839aa–8.

■ 2. Subpart A, consisting of §§ 1466.1 through 1466.9, is revised to read as follows:

Subpart A—General Provisions

Sec.
1466.1 Applicability.
1466.2 Administration.
1466.3 Definitions.
1466.4 National priorities.
1466.5 National allocation and management.
1466.6 State allocation and management.
1466.7 Outreach activities.
1466.8 Program requirements.
1466.9 EQIP plan of operations.

Subpart A—General Provisions

§ 1466.1 Applicability.

(a) The purposes of the Environmental Quality Incentives Program (EQIP) are to promote agricultural production, forest management, and environmental quality as compatible goals, and to optimize environmental benefits. Through EQIP, the Natural Resources Conservation Service (NRCS) provides assistance to eligible farmers and ranchers to address soil, water, and air quality, wildlife habitat, surface and groundwater conservation, energy conservation, and related natural resource concerns. EQIP's financial and technical assistance helps producers comply with environmental regulations and enhance agricultural and forested lands in a cost-effective and environmentally beneficial manner. The purposes of the program are achieved by planning and implementing conservation practices on eligible land.

[3] The exception to this is the Conservation Reserve Program; since 1987 the NRI has reported acreage enrolled in CRP.

[4] Soil and Water Conservation Society. 2006. Final Report from the Blue Ribbon Panel Conducting an External Review of the U.S. Department of Agriculture Conservation Effects Assessment Project. Ankeny, IA: Soil and Water Conservation Society. This review is available at *http://www.nrcs.usda.gov/technical/NRI/ceap/*.

(b) EQIP is available in any of the 50 States, the District of Columbia, the Commonwealth of Puerto Rico, Guam, the Virgin Islands of the United States, American Samoa, and the Commonwealth of the Northern Mariana Islands.

§ 1466.2 Administration.

(a) The funds, facilities, and authorities of the Commodity Credit Corporation (CCC) are available to NRCS for carrying out EQIP. Accordingly, where NRCS is mentioned in this Part, it also refers to the CCC's funds, facilities, and authorities where applicable.

(b) NRCS supports ''locally led conservation'' by using State Technical Committees at the State level and local working groups at the county or parish level to advise NRCS on issues relating to the EQIP implementation such as:

(1) Identification of priority resource concerns;

(2) Identification of which conservation practices should be eligible for financial assistance; and

(3) Establishment of payment rates.

(c) No delegation in this Part to lower organizational levels shall preclude the Chief from making any determinations under this Part, or from reversing or modifying any determination made under this Part.

(d) NRCS may enter into agreements with other Federal or State agencies, Indian tribes, conservation districts, units of local government, public or private organizations, and individuals to assist NRCS with implementation of the program in this Part.

§ 1466.3 Definitions.

The following definitions will apply to this Part and all documents issued in accordance with this Part, unless specified otherwise:

Agricultural land means cropland, grassland, rangeland, pasture, and other agricultural land, on which agricultural and forest-related products, or livestock are produced and resource concerns may be addressed. Other agricultural lands include cropped woodland, marshes, incidental areas included in the agricultural operation, and other types of agricultural land used for production of livestock.

Agricultural operation means a parcel or parcels of land whether contiguous or noncontiguous, which the producer is listed as the operator or owner/operator in the Farm Service Agency (FSA) record system, which is under the effective control of the producer at the time the producer applies for a contract, and which is operated by the producer with equipment, labor, management, and production, forestry, or cultivation practices that are substantially separate from other operations.

Animal waste management facility means a structural conservation practice, implemented in the context of a Comprehensive Nutrient Management Plan and consistent with the Field Office Technical Guide, which is used for storing, treating, or handling animal waste or byproducts, such as animal carcasses.

Applicant means a person, legal entity, joint operation, or tribe that has an interest in an agricultural operation, as defined in part 1400 of this chapter, who has requested in writing to participate in EQIP.

At-risk species means any plant or animal species as determined by the State Conservationist, with advice from the State Technical Committee, to need direct intervention to halt its population decline.

Beginning Farmer or Rancher means a person or legal entity who:

(1) Has not operated a farm or ranch, or who has operated a farm or ranch for not more than 10 consecutive years. This requirement applies to all members of an entity, who will materially and substantially participate in the operation of the farm or ranch.

(2) In the case of a contract with an individual, individually or with the immediate family, material and substantial participation requires that the individual provide substantial day-to-day labor and management of the farm or ranch, consistent with the practices in the county or State where the farm is located.

(3) In the case of a contract with an entity or joint operation, all members must materially and substantially participate in the operation of the farm or ranch. Material and substantial participation requires that each of the members provide some amount of the management, or labor and management necessary for day-to-day activities, such that if each of the members did not provide these inputs, operation of the farm or ranch would be seriously impaired.

Chief means the Chief of NRCS, United States Department of Agriculture (USDA), or designee.

Comprehensive Nutrient Management Plan (CNMP) means a conservation system that is unique to an animal feeding operation (AFO). A CNMP is a grouping of conservation practices and management activities which, when implemented as part of a conservation system, will help to ensure that both production and natural resource protection goals are achieved. A CNMP incorporates practices to use animal manure and organic by-products as a beneficial resource. A CNMP addresses natural resource concerns dealing with soil erosion, manure, and organic byproducts and their potential impacts on all natural resources including water and air quality, which may derive from an AFO. A CNMP is developed to assist an AFO owner/operator in meeting all applicable local, Tribal, State, and Federal water quality goals or regulations. For nutrient impaired stream segments or water bodies, additional management activities or conservation practices may be required by local, Tribal, State, or Federal water quality goals or regulations.

Conservation district means any district or unit of State, Tribal, or local government formed under State, Tribal, or territorial law for the express purpose of developing and carrying out a local soil and water conservation program. Such district or unit of government may be referred to as a ''conservation district,'' ''soil conservation district,'' ''soil and water conservation district,'' ''resource conservation district,'' ''land conservation committee,'' ''natural resource district,'' or similar name.

Conservation Innovation Grants means competitive grants made under EQIP to individuals and governmental and non-governmental organizations to stimulate and transfer innovative technologies and approaches, to leverage Federal funds, and to enhance and protect the environment, in conjunction with agricultural production and forest management.

Conservation practice means one or more conservation improvements and activities, including structural practices, land management practices, vegetative practices, forest management practices, and other improvements that achieve the program purposes, including such items as CNMPs, agricultural energy management plans, dryland transition plans, forest management plans, integrated pest management, and other plans determined acceptable by the Chief.

Contract means a legal document that specifies the rights and obligations of any participant accepted into the program. An EQIP contract is a binding agreement for the transfer of assistance from USDA to the participant to share in the costs of applying conservation practices.

Cost-effectiveness means the least costly option for achieving a given set of conservation objectives.

Designated conservationist means an NRCS employee whom the State Conservationist has designated as responsible for EQIP administration in a specific area.

EQIP plan of operations means the document that identifies the location and timing of conservation practices that the participant agrees to implement on eligible land in order to address the priority resource concerns, optimize environmental benefits, and address program purposes as defined in *§ 1466.1*. The EQIP plan of operations is part of the EQIP contract.

Estimated income foregone means an estimate of the net income loss associated with the adoption of a conservation practice, including from a change in land use or land taken out of production or the opportunity cost associated with the adoption of a conservation practice. This shall not include losses of income due to disaster or other events unrelated to the conservation practice.

Field office technical guide (FOTG) means the official local NRCS source of resource information and interpretations of guidelines, criteria, and requirements for planning and applying conservation practices and conservation management systems. It contains detailed information on the conservation of soil, water, air, plant, and animal resources applicable to the local area for which it is prepared.

Forest management plan means a site-specific plan that is prepared by a professional resource manager, in consultation with the participant, and is approved by the State Conservationist. Forest management plans may include a forest stewardship plan, as specified in section 5 of the Cooperative Forestry Assistance Act of 1978 (16 U.S.C. 2103a); another practice plan approved by the State Forester; or another plan determined appropriate by the State Conservationist. The plan is intended to comply with Federal, State, tribal, and local laws, regulations, and permit requirements.

Historically underserved producer means an eligible person, joint operation, or legal entity who is a beginning farmer or rancher, socially disadvantaged farmer or rancher, or limited resource farmer or rancher.

Indian land means:

(1) Land held in trust by the United States for individual Indians or Indian tribes; or

(2) Land, the title to which is held by individual Indians or Indian Tribes subject to Federal restrictions against alienation or encumbrance; or

(3) Land which is subject to rights of use, occupancy and/or benefit of certain Indian Tribes; or

(4) Land held in fee title by an Indian, Indian family or Indian Tribe.

Indian Tribe means any Indian Tribe, band, nation, or other organized group or community, including any Alaska Native village or regional or village corporation as defined in or established pursuant to the Alaska Native Claims Settlement Act (43 U.S.C. 1601 et seq.) which is recognized as eligible for the special programs and services provided by the United States to Indians because of their status as Indians.

Integrated Pest Management means a sustainable approach to managing pests by combining biological, cultural, physical, and chemical tools in a way that minimizes economic, health, and environmental risks.

Joint operation means, as defined in part 1400 of this chapter, a general partnership, joint venture, or other similar business organization in which the members are jointly and severally liable for the obligations of the organization.

Legal entity means, as defined in part 1400 of this chapter, an entity created under Federal or State law that:

(1) Owns land or an agricultural commodity, product, or livestock; or

(2) Produces an agricultural commodity, product, or livestock.

Lifespan means the period of time during which a conservation practice should be maintained and used for the intended purpose.

Limited Resource Farmer or Rancher means:

(1) A person with direct or indirect gross farm sales not more than $155,200 in each of the previous two years (adjusted for inflation using Prices Paid by Farmer Index as compiled by National Agricultural Statistical Service), and

(2) Has a total household income at or below the national poverty level for a family of four, or less than 50 percent of county median household income in each of the previous two years (to be determined annually using Commerce Department Data).

Liquidated damages means a sum of money stipulated in the EQIP contract that the participant agrees to pay NRCS if the participant fails to adequately complete the terms of the contract. The sum represents an estimate of the technical assistance expenses incurred to service the contract, and reflects the difficulties of proof of loss and the inconvenience or non-feasibility of otherwise obtaining an adequate remedy.

Livestock means all animals produced on farms or ranches, as determined by the Chief.

Livestock production means farm or ranch operations involving the production, growing, raising, or reproduction of livestock or livestock products.

Local Working Group means the advisory body as defined in part 610 of this title.

National measures mean measurable criteria identified by the Chief, with the advice of other Federal agencies and State Conservationists, to help EQIP achieve the national priorities and statutory requirements.

National Organic Program means the national program, administered by the Agricultural Marketing Service, which regulates the standards for any farm, wild crop harvesting, or handling operation that wants to sell an agricultural product as organically produced.

National priorities means resource issues identified by the Chief, with advice from other Federal agencies and State Conservationists, which will be used to determine the distribution of EQIP funds and guide local EQIP implementation.

Natural Resources Conservation Service is an agency of the USDA, which has responsibility for administering EQIP using the funds, facilities, and authorities of the CCC.

Nonindustrial private forest land means rural land, as determined by the Secretary, that has existing tree cover or is suitable for growing trees; and is owned by any nonindustrial private individual, group, association, corporation, Indian Tribe, or other private legal entity that has definitive decision-making authority over the land.

Operation and maintenance means work performed by the participant to keep the applied conservation practice functioning for the intended purpose during the conservation practice lifespan. Operation includes the administration, management, and performance of non-maintenance actions needed to keep the completed practice functioning as intended. Maintenance includes work to prevent deterioration of the practice, repairing damage, or replacement of the practice to its original condition if one or more components fail.

Operation and maintenance (O&M) agreement means the document that, in conjunction with the EQIP plan of operations, specifies the operation and maintenance responsibilities of the participant for conservation practices installed with EQIP assistance.

Organic System Plan means a management plan for organic production or for an organic handling operation that has been agreed to by the producer or handler and the certifying agent. The Organic System Plan includes all written plans that govern all

aspects of agricultural production or handling.

Participant means a person, legal entity, joint operation, or tribe that is receiving payment or is responsible for implementing the terms and conditions of an EQIP contract.

Payment means financial assistance provided to the participant based on the estimated costs incurred in performing or implementing conservation practices, including costs for: planning, design, materials, equipment, installation, labor, maintenance, management, or training, as well as the estimated income foregone by the producer for designated conservation practices.

Person means, as defined in part 1400 of this chapter, an individual, natural person, and does not include a legal entity.

Priority resource concern(s) means a resource concern that is identified by the State Conservationist, in consultation with the State Technical Committee, as a priority for a State, geographic area, or watershed level.

Producer means a person, legal entity, or joint operation who has an interest in the agricultural operation, according to part 1400 of this chapter, or who is engaged in agricultural production or forestry management.

Regional Assistant Chief means the NRCS employee authorized to direct and supervise NRCS activities in an NRCS region.

Resource Concern means a specific natural resource problem that represents a significant concern in a State or region, and is likely to be addressed successfully through the implementation of the conservation activities by producers.

Secretary means the Secretary of the USDA.

Socially disadvantaged farmer or rancher means a farmer or rancher who has been subjected to racial or ethnic prejudices because of their identity as a member of a group without regard to their individual qualities.

State Conservationist means the NRCS employee authorized to implement EQIP and direct and supervise NRCS activities in a State, the Caribbean Area, or the Pacific Island Area.

State Technical Committee means a committee established by the Secretary in a State pursuant to 16 U.S.C. 3861.

Structural practice means a conservation practice, including a vegetative practice, that involves establishing, constructing, or installing a site-specific measure to conserve and protect a resource from degradation, or improve soil, water, air, or related natural resources in the most cost-effective manner. Examples include, but are not limited to, animal waste management facilities, terraces, grassed waterways, tailwater pits, livestock water developments, contour grass strips, filterstrips, critical area plantings, tree plantings, establishment or improvement of wildlife habitat, and capping of abandoned wells.

Technical assistance means technical expertise, information, and tools necessary for the conservation of natural resources on land active in agricultural, forestry, or related uses. The term includes the following:

(1) Technical services provided directly to farmers, ranchers, and other eligible entities, such as conservation planning, technical consultation, and assistance with design and implementation of conservation practices; and

(2) Technical infrastructure, including activities, processes, tools, and agency functions needed to support delivery of technical services, such as technical standards, resource inventories, training, data, technology, monitoring, and effects analyses.

Technical Service Provider (TSP) means an individual, private-sector entity, or public agency certified by NRCS to provide technical services to program participants, in lieu of or on behalf of NRCS.

Wildlife means non-domesticated birds, fishes, reptiles, amphibians, invertebrates, and mammals.

§ 1466.4 National priorities.

(a) The following national priorities, consistent with statutory resource concerns that include soil, water, wildlife, air quality, and related resource concerns, will be used in EQIP implementation:

(1) Reductions of nonpoint source pollution, such as nutrients, sediment, pesticides, or excess salinity in impaired watersheds consistent with total maximum daily loads (TMDLs) where available; the reduction of surface and groundwater contamination; and the reduction of contamination from agricultural point sources, such as concentrated animal feeding operations;

(2) Conservation of ground and surface water resources;

(3) Reduction of emissions, such as particulate matter, nitrogen oxides, volatile organic compounds, and ozone precursors and depleters that contribute to air quality impairment violations of National Ambient Air Quality Standards;

(4) Reduction in soil erosion and sedimentation from unacceptable levels on agricultural land; and

(5) Promotion of at-risk species habitat conservation.

(b) In consultation with other Federal agencies, NRCS will undertake periodic reviews of the national priorities and the effects of program delivery at the State and local level to adapt the program to address emerging resource issues. NRCS will:

(1) Use the national priorities to guide the allocation of EQIP funds to the NRCS State offices,

(2) Use the national priorities in conjunction with State and local priorities to assist with prioritization and selection of EQIP applications, and

(3) Periodically review and update the national priorities utilizing input from the public and affected stakeholders to ensure that the program continues to address priority resource concerns.

§ 1466.5 National allocation and management.

The Chief allocates EQIP funds to the State Conservationists to implement EQIP at the State and local level. In order to optimize the overall environmental benefits over the program duration, the Chief will:

(a) Use an EQIP fund allocation formula that reflects national priorities and that uses available natural resource and resource concerns data to distribute funds to the State level. This procedure will be updated periodically to reflect adjustments to national priorities and information about resource concerns and program performance. The data used in the allocation formula will be updated as they become available.

(b) Provide a performance incentive to NRCS in States that demonstrate a high level of program accomplishment in implementing EQIP. The Chief shall consider factors such as strategically planning EQIP implementation, effectively addressing national priorities and measures, State and local resource concerns, the program delivery effectiveness, the use of TSPs, and the number of contracts with historically underserved producers.

(c) Establish State level EQIP performance goals based on national, regional, and State priorities.

(d) Ensure that national, State and local level information regarding program implementation such as resource priorities, eligible practices, ranking processes, payment schedules, fund allocation, and program achievements are made available to the public.

(e) Consult with other Federal agencies with the appropriate expertise and information when evaluating the considerations described in this section.

(f) Authorize the State Conservationist, with advice from the State Technical Committee and local working groups, to determine how funds will be used and how the program will be administered to achieve national priorities in each State.

(g) Utilize assessment, evaluation, and accountability procedures based on actual natural resource and environmental outcomes and results.

§ 1466.6 State allocation and management.

The State Conservationist will:

(a) Identify State priority resource concerns, with the advice of the State Technical Committee, which directly contribute toward meeting national priorities and measures, and will use NRCS's accountability system and other accountability tools to establish local level goals and treatment objectives;

(b) Identify, as appropriate and necessary, designated conservationists who are NRCS employees that are assigned the responsibility to administer EQIP in specific areas; and

(c) Use the following to determine how to manage EQIP and how to allocate funds within a State:

(1) The nature and extent of priority resource concerns at the State and local level;

(2) The availability of human resources, incentive programs, educational programs, and on-farm research programs from public, private, and Tribal sources, to assist with the activities related to the priority resource concerns;

(3) The existence of multi-county and/or multi-State collaborative efforts to address regional priority resource concerns;

(4) Program performance and results;

(5) The degree of difficulty that producers face in complying with environmental laws; and

(6) The presence of additional priority resource concerns and specialized farming operations, including but not limited to, specialty crop producers, organic producers, and small-scale farms.

§ 1466.7 Outreach activities.

NRCS will establish program outreach activities at the national, State, and local levels in order to ensure that producers whose land has environmental problems and priority resource concerns are aware and informed that they may be eligible to apply for program assistance. Special outreach will be made to eligible producers with historically low participation rates, including but not restricted to, limited resource, socially disadvantaged, small-scale, or beginning farmers or ranchers, Indian Tribes, Alaska Natives, and Pacific Islanders.

§ 1466.8 Program requirements.

(a) Program participation is voluntary. The applicant must develop an EQIP plan of operations for the agricultural or nonindustrial private forest land to be treated that serves as the basis for the EQIP contract. NRCS provides participants with technical assistance and payments to plan and apply needed conservation practices.

(b) To be eligible to participate in EQIP, an applicant must:

(1) Be in compliance with the highly erodible land and wetland conservation provisions found at part 12 of this title;

(2) Have an interest in the agricultural operation as defined in part 1400 of this chapter;

(3) Have control of the land for the term of the proposed contract period;

(i) The Chief may determine that land administered by the Bureau of Indian Affairs (BIA), Indian land, or other such circumstances provides sufficient assurance of control,

(ii) If the applicant is a tenant of the land involved in agricultural production or forestry management, the applicant shall provide the Chief with the written concurrence of the landowner in order to apply a structural conservation practice,

(4) Submit an EQIP plan of operations or plan developed for the purposes of acquiring an air or water quality permit, provided these plans contain elements equivalent to those elements required by an EQIP plan of operations and are acceptable to the State Conservationist as being consistent with the purposes of the program;

(5) Supply information, as required by NRCS, to determine eligibility for the program, including but not limited to, information to verify the applicant's status as a limited resource, beginning farmer or rancher, and payment eligibility as established by part 1400 of this chapter; and

(6) Provide a list of all members of the legal entity and embedded entities along with members' tax identification numbers and percentage interest in the entity. Where applicable, American Indians, Alaska Natives, and Pacific Islanders may use another unique identification number for each individual eligible for payment.

(c) Eligible land includes agricultural land and nonindustrial private forest land, and other land on which agricultural products, livestock, or forest-related products are produced and resource concerns may be addressed. Other agricultural lands include cropped woodland, marshes, incidental areas included in the agricultural operation, and other types of agricultural land used for production of livestock. However, land may be considered for enrollment in EQIP only if NRCS determines that the land is:

(1) Privately owned land;

(2) Publicly owned land where:

(i) The land is a working component of the participant's agricultural and forestry operation, and

(ii) The participant has control of the land for the term of the contract, and

(iii) The conservation practices to be implemented on the public land are necessary and will contribute to an improvement in the identified resource concern that is on private land; or

(3) Indian land.

(d) Sixty percent of available EQIP financial assistance will be targeted to conservation practices related to livestock production, including practices on grazing lands and other lands directly attributable to livestock production, as measured at the national level.

(e) NRCS will establish a national target to set aside five percent of EQIP funds for socially disadvantaged farmers or ranchers and an additional five percent of EQIP funds for beginning farmers or ranchers.

§ 1466.9 EQIP plan of operations.

(a) All conservation practices in the EQIP plan of operations must be approved by NRCS and developed and carried out in accordance with the applicable NRCS technical guidance.

(b) The participant is responsible for implementing the EQIP plan of operations.

(c) The EQIP plan of operations must include:

(1) A description of the participant's specific conservation and environmental objectives to be achieved;

(2) To the extent practicable, the quantitative or qualitative goals for achieving the participant's conservation, natural resource, and environmental objectives;

(3) A description of one or more conservation practices in the conservation management system, including conservation planning, design, or installation activities, to be implemented to achieve the conservation and environmental objectives;

(4) A description of the schedule for implementing the conservation practices, including timing, sequence, operation, and maintenance; and

(5) Information that will enable evaluation of the effectiveness of the plan in achieving the environmental objectives.

(d) If an EQIP plan of operations includes an animal waste storage or

treatment facility, the participant must agree to develop and implement a CNMP or demonstrate to the satisfaction of the designated conservationist that a CNMP has been implemented.

(e) If an EQIP plan of operations addresses forestland, the participant must develop and implement a forest management plan.

(f) A participant may receive assistance to implement an EQIP plan of operations for water conservation only if the assistance will facilitate a reduction in ground and surface water use on the agricultural operation, unless the producer is participating in a watershed-wide project, as approved by the State Conservationist, which will effectively conserve water in accordance with § 1466.20.

■ 3. In subpart B, §§ 1466.10 through 1466.26 are revised to read as follows.

Subpart B—Contracts and Payments

Sec.
1466.10 Conservation practices.
1466.11 Technical services provided by qualified personnel not affiliated with USDA.
1466.20 Application for contracts and selecting applications.
1466.21 Contracts requirements.
1466.22 Conservation practice operation and maintenance.
1466.23 Payment rates.
1466.24 EQIP payments.
1466.25 Contract modifications and transfers of land.
1466.26 Contract violations and terminations.

* * * * *

§ 1466.10 Conservation practices.

(a) NRCS will determine the conservation practices for which participants may receive program payments. A list of eligible practices will be available to the public.

(b) Payments will not be made to a participant for a conservation practice that either the applicant or another producer has applied prior to application for the program. Payments will not be made for a conservation practice that has been initiated or implemented prior to contract approval, unless a waiver was granted by the State Conservationist or designated conservationist prior to the practice implementation.

(c) A participant will be eligible for payments for water conservation and irrigation related conservation practices only on land that has been irrigated for two of the last five years prior to application for assistance.

(d) Where new technologies or management approaches that provide a high potential for optimizing environmental benefits have been developed, NRCS may approve interim conservation practice standards that incorporate the new technologies and provide financial assistance for pilot work to evaluate and assess the performance, efficiency, and effectiveness of the new technology or management approach.

§ 1466.11 Technical services provided by qualified personnel not affiliated with USDA.

(a) NRCS may use the services of qualified TSPs in performing its responsibilities for technical assistance.

(b) Participants may use technical services from qualified personnel of other Federal, State, and local agencies, Indian Tribes, or individuals who are certified as TSPs by NRCS.

(c) Technical services provided by qualified personnel not affiliated with USDA may include, but are not limited to: conservation planning; conservation practice survey, layout, design, installation, and certification; and information; education; and training for producers.

(d) NRCS retains approval authority of work done by non-NRCS personnel for the purpose of approving EQIP payments.

§ 1466.20 Application for contracts and selecting applications.

(a) In evaluating EQIP applications, the State Conservationist or designated conservationist, with advice from the State Technical Committee or local working group, takes into account the following guidelines:

(1) Any producer who has eligible land may submit an application for participation in EQIP. Applications are accepted throughout the year. Producers who are members of a joint operation may file a single application for the joint operation.

(2) The State Conservationist, to the greatest extent practicable, will group applications of similar crop, forestry, and livestock operations for evaluation purposes.

(3) The State Conservationist will evaluate applications within each established grouping.

(b) In selecting EQIP applications, the State Conservationist or designated conservationist, with advice from the State Technical Committee or local working group, may establish ranking pools to address a specific resource concern, geographic area, or agricultural operation type or develop a ranking process to prioritize applications for funding that address national, State, and local priority resource concerns, taking into account the following guidelines:

(1) The State Conservationist or designated conservationist will periodically select the highest ranked applications for funding based on applicant eligibility, fund availability, and the NRCS ranking process. The State Conservationist or designated conservationist will rank all applications according to the following factors:

(i) The degree of cost-effectiveness of the proposed conservation practices;

(ii) The magnitude of the expected environmental benefits resulting from the conservation treatment and the priority of the resource concerns that have been identified at the local, State, and national levels;

(iii) How effectively and comprehensively the project addresses the designated resource concern or resource concerns;

(iv) Use of conservation practices that provide long-term environmental enhancements;

(v) Compliance with Federal, State, Tribal, or local regulatory requirements concerning soil, water and air quality; wildlife habitat; and ground and surface water conservation;

(vi) Willingness of the applicant to complete all conservation practices in an expedited manner;

(vii) The ability to improve existing conservation practices or systems, which are in place at the time the application is accepted, or that complete a conservation system;

(viii) Other locally defined pertinent factors, such as the location of the conservation practice, the extent of natural resource degradation, and the degree of cooperation by local producers to achieve environmental improvements.

(2) For applications that include water conservation or irrigation efficiency practices, the State Conservationist will give priority to those applications where:

(i) Consistent with State law in which the producer's eligible land is located, there is a reduction in water use in the agricultural operation, or where the producer agrees not to use any associated water savings to bring new land under irrigation production, other than incidental land needed for efficient operations.

(ii) A producer who brings new land under irrigated production may be excluded from this latter condition if the producer is participating in a watershed-wide project that will effectively conserve water. The State Conservationist will designate eligible watershed-wide projects that effectively conserve water, using the following criteria:

(A) The project area has a current, comprehensive water resource assessment;

(B) The project plan has demonstrated effective water conservation management strategies; and

(C) The project sponsors have consulted relevant State and local agencies.

(3) If the State Conservationist determines that the environmental values of two or more applications for payments are comparable, the State Conservationist will not assign a higher priority to the application solely because it would present the least cost to the program.

(4) The ranking will not give preferential treatment to applications based on size of the operation.

(5) The ranking process will determine the order in which applications will be selected for funding. The approving authority for EQIP contracts will be the State Conservationist or designee, except that the approving authority for any EQIP contract greater than $150,000 and up to $300,000 will be the appropriate NRCS Regional Assistant Chief.

(6) The State Conservationist will make available to the public all information regarding priority resource concerns, the list of eligible practices, payment rates, and how the EQIP program is implemented in the State.

§ 1466.21 Contract requirements.

(a) In order for a participant to receive payments, the participant must enter into a contract agreeing to implement one or more conservation practices. Technical services may be included in the contract.

(b) An EQIP contract will:

(1) Identify all conservation practices to be implemented, the timing of practice installation, the operation and maintenance requirements for the practices, and applicable payments allocated to the practices under the contract;

(2) Be for a minimum duration of one year after completion of the last practice, but not more than 10 years;

(3) Incorporate all provisions as required by law or statute, including requirements that the participant will:

(i) Not implement any practices within the agricultural or forestry operation that would defeat the program's purposes;

(ii) Refund any program payments received with interest, and forfeit any future payments under the program, on the violation of a term or condition of the contract, consistent with the provisions of § 1466.26;

(iii) Refund all program payments received on the transfer of the right and interest of the producer in land subject to the contract, unless the transferee of the right and interest agrees to assume all obligations, including operation and maintenance of the EQIP contract's conservation practices, consistent with the provisions of § 1466.25;

(iv) Implement a comprehensive nutrient management plan when the EQIP contract includes an animal waste management facility;

(v) Implement a forest management plan when the EQIP plan of operations addresses nonindustrial private forest land;

(vi) Supply information as may be required by NRCS to determine compliance with the contract and program requirements;

(vii) Specify the participant's responsibilities for operation and maintenance of the applied conservation practices, consistent with the provisions of § 1466.22; and

(4) Specify any other provision determined necessary or appropriate by NRCS.

(c) The participant must start at least one financially assisted practice within the first 12 months of signing a contract. If a participant, for reasons beyond their control, is unable to start conservation practice within the first year of the contract, the participant can request a waiver from the State Conservationist.

(d) Each contract will be limited to no more than $300,000. The Chief may waive this contract limitation to allow up to $450,000 for projects of special environmental significance that include methane digesters, other innovative technologies, and projects that will result in significant environmental improvements. Projects of special environmental significance must meet the following criteria, as determined by the Chief:

(1) Site-specific evaluation documents have been completed, documenting that the project will have substantial positive impacts on critical resources in or near the project area (*e.g.*, impaired water bodies, at-risk species, drinking water supplies, or air quality attainment);

(2) The project clearly addresses a national priority and State, Tribal, or local priority resource concerns, as applicable; and

(3) The project assists the participant in complying with Federal, State, and local regulatory requirements.

§ 1466.22 Conservation practice operation and maintenance.

(a) The contract will incorporate the O&M agreement that addresses the operation and maintenance of conservation practices applied under the contract.

(b) NRCS expects the participant to operate and maintain each conservation practice installed under the contract for its intended purpose for the conservation practice lifespan as specified in the O&M agreement.

(c) Conservation practices installed before the contract execution, but included in the contract to obtain the environmental benefits agreed upon, must be operated and maintained as specified in the contract and O&M agreement.

(d) NRCS may periodically inspect the conservation practice during the contract duration as specified in the O&M agreement to ensure that operation and maintenance requirements are being carried out, and that the conservation practice is fulfilling its intended objectives.

(e) If NRCS finds during the contract that a participant is not operating and maintaining practices in an appropriate manner, NRCS may terminate and request a refund of payments made for that conservation practice under the contract.

§ 1466.23 Payment rates.

(a) The State Conservationist or designated conservationist will develop a list of conservation practices, eligible for payment under the program, which considers:

(1) The conservation practice cost-effectiveness, implementation efficiency, and innovation,

(2) The degree and effectiveness in treating priority resource concerns,

(3) The number of resource concerns the practice will address,

(4) The longevity of the practice's environmental benefits,

(5) The conservation practice's ability to assist producers in meeting regulatory requirements, and

(6) Other pertinent local considerations.

(b) Payment rates will be established by the State Conservationist or designated conservationist, with advice from the State Technical Committee and local working groups.

(c) Determining payment rates. (1) A payment to a producer for performing a practice may not exceed, as determined by the State or designated conservationist:

(i) 75 percent of the estimated costs incurred by implementing the conservation practice;

(ii) 100 percent of the estimated income foregone; or

(iii) Both conditions in paragraphs (c)(1)(i) and (ii) of this section, where a producer incurs costs in implementing a conservation practice and foregoes income related to that practice implementation.

(iv) When determining payments for income foregone, the State Conservationist may give higher priority to the following conservation practices:

(A) Residue management;

(B) Nutrient management;

(C) Air quality management;

(D) Invasive species management;

(E) Pollinator habitat development or improvement;

(F) Animal carcass management technology; or

(G) Pest management.

(2) Notwithstanding paragraph (c)(1)(ii) of this section, a farmer or rancher meeting the historically underserved producer designation in § 1466.3 may be awarded the applicable payment rate and an additional rate that is not less than 25 percent above the applicable rate, provided this increase does not exceed 90 percent of the incurred costs estimated for the conservation practice.

(3) The payments to a participant will be reduced proportionately below the rate established by the State Conservationist or designated conservationist, to the extent that total financial contributions for a conservation practice from other sources exceed 100 percent of the estimated costs incurred for implementing or performing the conservation practice.

(4) The State Conservationist shall provide payments for conservation practices on some or all of the operations of a producer related to organic production and the transition to organic production. Payments may not be made to cover the costs associated with organic certification or for practices that are eligible for cost-share payments under the National Organic Program (7 U.S.C. 6523).

(d) Practice payment rates greater than 50 percent for estimated costs incurred, excluding those described in paragraph (c)(2) of this section, are to be approved by the Chief.

(e) Subject to fund availability, the payment rates for conservation practices scheduled after the year of contract obligation may be adjusted to reflect increased costs.

§ 1466.24 EQIP payments.

(a) Except for contracts entered into prior to October 1, 2008, or as provided in paragraph (b) of this section, the total amount of payments paid to a person, joint operation, or legal entity under this part may not exceed an aggregate of $300,000, directly or indirectly, for all contracts, including prior year contracts, entered into during any 6-year period. For purpose of applying this requirement, the 6-year period will include those payments made in fiscal years 2009–2014. Payments received for technical assistance shall be excluded from this limitation.

(b) The Chief may waive the $300,000 payment limitation, allowing up to $450,000 per person, joint operation, or legal entity for projects of special environmental significance, as defined in § 1466.21(d).

(c) Payments for conservation practices related to organic production to a person, joint operation, or legal entity, directly or indirectly, may not exceed in aggregate $20,000 per year or $80,000 during any 6-year period. Payments received for technical assistance shall be excluded from this limitation.

(d) To determine eligibility for payments, NRCS will use the following criteria:

(1) The provisions in part 1400 of this chapter, Payment Limitation and Payment Eligibility, subparts A and G.

(2) States, political subdivisions, and entities thereof will not be considered to be persons or legal entities eligible for payment.

(3) To be eligible to receive an EQIP payment, all legal entities or persons applying, either alone or as part of a joint operation, must provide a tax identification number and percentage interest in the legal entity. In accordance with 7 CFR 1400, an applicant applying as a joint operation or legal entity must provide a list of all members of the legal entity and joint operation and associated embedded entities, along with the members' social security numbers and percentage interest in the joint operation or legal entity. Where applicable, American Indians, Alaska Natives, and Pacific Islanders may use another unique identification number for each individual eligible for payment.

(4) With regard to contracts with Indian tribes or Indians represented by BIA, payments exceeding the payment limitation may be made to the Tribal participant if a BIA or Tribal official certifies in writing that no one individual, directly or indirectly, will receive more than the payment limitation. The Tribal entity must also provide, annually, a listing of individuals and payments made, by social security or tax identification number or other unique identification number, during the previous year for calculation of overall payment limitations. The BIA or Tribal entity must also produce, at the request of NRCS, proof of payments made to the person or legal entity that incurred costs or sacrificed income related to conservation practice implementation.

(5) Any cooperative association of producers that markets commodities for producers will not be considered to be a person eligible for payment.

(6) Eligibility for payments in accordance with part 1400, subpart G of this chapter, average adjusted gross income limitation, will be determined prior to contract approval.

(7) To be eligible for payments for conservation practices related to organic production or the transition to organic production, a participant will develop and implement an organic system plan as defined in § 1466.3.

(8) Eligibility for higher payments in accordance with paragraph (b) of this section will be determined at the time of contract approval.

(9) Any participant that utilizes a unique identification number as an alternative to a tax identification number will utilize only that identifier for any and all other EQIP contracts to which the participant is a party. Violators will be considered to have provided fraudulent representation and be subject to full penalties of § 1466.35.

(10) A participant will not be eligible for payments for conservation practices on eligible land if the participant receives payments or other benefits for the same practice on the same land under any other conservation program administered by USDA.

(11) The State Conservationist may issue advance payments to historically underserved producers up to 30 percent of the anticipated amount of the costs incurred for the purpose of purchasing materials or services to implement a conservation practice.

(12) Before NRCS will approve and issue final payment, the participant must certify that the conservation practice has been completed in accordance with the contract, and NRCS, or an approved TSP, must certify that the practice has been carried out in accordance with the applicable NRCS technical guidance.

§ 1466.25 Contract modifications and transfers of land.

(a) The participant and NRCS may modify a contract if both parties agree to the contract modification, the EQIP plan of operations is revised in accordance with NRCS requirements, and the contract is approved by the designated conservationist.

(b) It is the participant's responsibility to notify NRCS when he/she either anticipates the voluntary or involuntary loss of control of the land covered by an EQIP contract.

(c) The participant and NRCS may agree to transfer a contract to another party.

(1) To receive an EQIP payment, the transferee must be determined by NRCS to be eligible to participate in EQIP and must assume full responsibility under the contract, including the O&M agreement for those conservation practices already installed and those conservation practices to be installed as a condition of the contract.

(2) If the transferee is ineligible or refuses to accept future payments, NRCS will terminate the contract and may require the transferor to refund and/or forfeit all payments received.

(d) NRCS may require a participant to refund all or a portion of any financial assistance earned under EQIP if the participant sells or loses control of the land covered by an EQIP contract and the new owner or controller is not eligible to participate in the program or refuses to assume responsibility under the contract.

(e) In the event a conservation practice fails through no fault of the participant, the State Conservationist may issue payments to re-establish the practice, at the rates established in accordance with § 1466.23, provided such payments do not exceed the payment limitation requirements as set forth § 1466.24.

§ 1466.26 Contract violations and terminations.

(a) The State Conservationist may terminate, or by mutual consent with the parties, terminate the contract where:

(1) The parties to the contract are unable to comply with the terms of the contract as the result of conditions beyond their control;

(2) Termination of the contract would, as determined by the State Conservationist, be in the public interest; or

(3) A participant fails to correct a contract violation within the time period defined by NRCS.

(b) If a contract is terminated in accordance with the provisions of paragraphs (a)(1) and (a)(2) of this section, the State Conservationist may allow the participant to retain a portion of any payments received appropriate to the effort the participant has made to comply with the contract, or, in cases of hardship, where forces beyond the participant's control prevented compliance with the contract. If a participant claims hardship, such claims must be clearly documented and cannot have existed when the applicant applied for participation in the program.

(c) If NRCS determines that a participant is in violation of the terms of a contract, O&M agreement, or documents incorporated by reference into the contract, NRCS shall give the participant a period of time, as determined by NRCS, to correct the violation and comply with the terms of the contract and attachments thereto. If a participant continues in violation, NRCS may terminate the EQIP contract in accordance with § 1466.26(e).

(d) Notwithstanding the provisions of paragraph (c) of this section, a contract termination shall be effective immediately upon a determination by NRCS that the participant has submitted false information or filed a false claim, or engaged in any act, scheme, or device for which a finding of ineligibility for payments is permitted under the provisions of § 1466.35, or in a case in which the actions of the party involved are deemed to be sufficiently purposeful or negligent to warrant a termination without delay.

(e) If NRCS terminates a contract due to breach of contract, the participant will forfeit all rights to future payments under the contract, pay liquidated damages, and refund all or part of the payments received, plus interest. Participants violating EQIP contracts may be determined ineligible for future NRCS-administered conservation program funding.

(1) NRCS may require a participant to provide only a partial refund of the payments received if a previously installed conservation practice can function independently, is not adversely affected by the violation or the absence of other conservation practices that would have been installed under the contract.

(2) The State Conservationist will have the option to reduce or waive the liquidated damages, depending upon the circumstances of the case.

(i) When terminating a contract, NRCS may reduce the amount of money owed by the participant by a proportion that reflects the good faith effort of the participant to comply with the contract or the existence of hardships beyond the participant's control that have prevented compliance with the contract. If a participant claims hardship, that claim must be well documented and cannot have existed when the applicant applied for participation in the program.

(ii) In carrying out its role in this section, NRCS may consult with the local conservation district.

(f) The State Conservationist, in consultation with the State Technical Committee, may terminate a contract whereby a producer is receiving payments for conservation practices related to organic production, if the designated conservationist determines that the producer is not pursuing organic certification, or has been decertified.

■ 4. In subpart B, § 1466.27 is amended by revising paragraph (c)(4) to read as follows:

§ 1466.27 Conservation Innovation Grants (CIG).

* * * * *

(c) * * *

(4) There are some costs that grantees may not cover using CIG funds, such as costs incurred prior to the effective date of the grant, entertainment costs, any indirect cost exceeding fifteen percent, or renovation or refurbishment of facilities. A detailed list of costs not allowed will be published in the Request for Proposals.

* * * * *

■ 5. Subpart C, consisting of §§ 1466.30 through 1466.36, is revised to read as follows:

Subpart C—General Administration

Sec.
1466.30 Appeals.
1466.31 Compliance with regulatory measures.
1466.32 Access to operating unit.
1466.33 Equitable relief.
1466.34 Offsets and assignments.
1466.35 Misrepresentation and scheme and device.
1466.36 Environmental credits for conservation improvements.

Subpart C—General Administration

§ 1466.30 Appeals.

A participant may obtain administrative review of an adverse decision under EQIP in accordance with parts 11 and 614 of this title. Determination in matters of general applicability, such as payment rates, payment limits, the designation of identified priority resource concerns, and eligible conservation practices are not subject to appeal.

§ 1466.31 Compliance with regulatory measures.

Participants who carry out conservation practices shall be responsible for obtaining the authorities, rights, easements, permits, or other approvals necessary for the implementation, operation, and maintenance of the conservation practices in keeping with applicable laws and regulations. Participants shall be responsible for compliance with all laws and for all effects or actions resulting from the participant's performance under the contract.

§ 1466.32 Access to operating unit.

Any authorized NRCS representative shall have the right to enter an agricultural operation or tract for the

purposes of determining eligibility and for ascertaining the accuracy of any representations related to contract performance. Access shall include the right to provide technical assistance, determine eligibility, inspect any work undertaken under the contract, and collect information necessary to evaluate the conservation practice performance, specified in the contract. The NRCS representative shall make an effort to contact the participant prior to the exercising this provision.

§ 1466.33 Equitable relief.

(a) If a participant relied upon the advice or action of any authorized NRCS representative and did not know, or have reason to know, that the action or advice was improper or erroneous, NRCS may accept the advice or action as meeting program requirements and may grant relief, to the extent it is deemed desirable by NRCS, to provide a fair and equitable treatment because of the good-faith reliance on the part of the participant. The financial or technical liability for any action by a participant that was taken based on the advice of a NRCS certified non-USDA TSP is the responsibility of the certified TSP and will not be assumed by NRCS when NRCS authorizes payment. Where a participant believes that detrimental reliance on the advice or action of a NRCS representative resulted in an ineligibility or program violation, but the participant believes that a good faith effort to comply was made, the participant may request equitable relief under § 635.3 in chapter VI of this title.

(b) If, during the term of an EQIP contract, a participant has been found in violation of a provision of the EQIP contract, the O&M agreement, or any document incorporated by reference through failure to fully comply with that provision, the participant may be eligible for equitable relief under § 635.4 in chapter VI of this title.

§ 1466.34 Offsets and assignments.

(a) Except as provided in paragraph (b) of this section, any payment or portion thereof to any person, joint venture, legal entity or tribe shall be made without regard to questions of title under State law and without regard to any claim or lien against the crop, or proceeds thereof, in favor of the owner or any other creditor except agencies of the U.S. Government. The regulations governing offsets and withholdings found at part 1403 of this chapter shall be applicable to contract payments.

(b) EQIP participants may assign any payments in accordance with part 1404 of this chapter.

§ 1466.35 Misrepresentation and scheme or device.

(a) A person, joint venture, legal entity or tribe that is determined to have erroneously represented any fact affecting a program determination made in accordance with this Part shall not be entitled to contract payments and must refund to NRCS all payments, plus interest determined in accordance with part 1403 of this chapter.

(b) A producer who is determined to have knowingly:

(1) Adopted any scheme or device that tends to defeat the purpose of the program;

(2) Made any fraudulent representation;

(3) Adopted any scheme or device for the purpose of depriving any tenant or sharecropper of the payments to which such person would otherwise be entitled under the program; or

(4) Misrepresented any fact affecting a program determination, shall refund to NRCS all payments, plus interest determined in accordance with 7 CFR 1403, received by such producer with respect to all contracts. The producer's interest in all contracts shall be terminated.

(c) In accordance with § 1466.26(e), NRCS may determine the producer ineligible for future conservation programs funding.

§ 1466.36 Environmental credits for conservation improvements.

NRCS recognizes that environmental benefits will be achieved by implementing conservation practices funded through EQIP, and environmental credits may be gained as a result of implementing activities compatible with the purposes of an EQIP contract. NRCS asserts no direct or indirect interest on these credits. However, NRCS retains the authority to ensure that operation and maintenance (O&M) requirements for EQIP-funded improvements are met, consistent with §§ 1466.21 and 1466.22. Where activities may impact the land under an EQIP contract, participants are highly encouraged to request an O&M compatibility determination from NRCS prior to entering into any credit agreements.

Signed in Washington, DC, on January 8, 2009.

Arlen L. Lancaster,

Vice President, Commodity Credit Corporation and Chief, Natural Resources Conservation Service.

[FR Doc. E9–530 Filed 1–14–09; 8:45 am]

BILLING CODE 3410–16–P

DEPARTMENT OF AGRICULTURE

Commodity Credit Corporation

7 CFR Part 1467

RIN 0578–AA47

Wetlands Reserve Program

AGENCY: Natural Resources Conservation Service and Commodity Credit Corporation, United States Department of Agriculture.

ACTION: Interim final rule with request for comment.

SUMMARY: The Wetlands Reserve Program (WRP) assists owners of eligible land in restoring and protecting wetlands. This interim final rule sets forth how the Natural Resources Conservation Service (NRCS), an agency of the U.S. Department of Agriculture (USDA), using the funds, facilities, and authorities of the Commodity Credit Corporation (CCC), will implement WRP in response to changes made to the program by the Food, Conservation, and Energy Act of 2008. In addition, this interim final rule incorporates other changes to the regulation for clarification or program administration improvement.

DATES: *Effective Date:* The rule is effective January 15, 2009.

Comment Date: Submit comments on or before March 16, 2009.

ADDRESSES: You may send comments (identified by Docket Number NRCS–IFR–08013) using any of the following methods:

- *Government-wide rulemaking Web site:* Go to *http://www.regulations.gov* and follow the instructions for sending comments electronically.
- *Mail:* Easements Programs Division, Natural Resources Conservation Service, Wetlands Reserve Program Comments, P.O. 2890, Room 6819–S, Washington, DC 20013.
- *Fax:* 1–202–720–9689.
- *Hand Delivery:* Room 6819–S of the USDA South Office Building, 1400 Independence Avenue, SW., Washington, DC 20250, between 9 a.m. and 4 p.m., Monday through Friday, except Federal Holidays. Please ask the guard at the entrance to the South Office Building to call 202–720–4527 in order to be escorted into the building.
- This interim final rule may be accessed via Internet. Users can access the NRCS homepage at *http://www.nrcs.usda.gov/*; select the *Farm Bill* link from the menu; select the *Interim final* link from beneath *the Final and Interim Final Rules Index* title. Persons with disabilities who require

alternative means for communication (Braille, large print, audio tape, etc.) should contact the USDA TARGET Center at: (202) 720–2600 (voice and TDD).

FOR FURTHER INFORMATION CONTACT: Robin Heard, Director, Easement Programs Division, U.S. Department of Agriculture, Natural Resources Conservation Service, Room 6819, P.O. Box 2890, Washington, DC 20013–2890; Phone: (202) 720–1854; Fax: (202) 720–9689; or e-mail: *WRP2008@wdc.usda.gov*.

SUPPLEMENTARY INFORMATION:

Regulatory Certifications

Executive Order 12866

The Office of Management and Budget (OMB) reviewed this interim final rule and determined that this interim final rule is an economically significant regulatory action since it results in an annual effect on the economy of $100 million or more. Pursuant to Executive Order 12866, NRCS conducted a cost-benefit analysis of the Wetlands Reserve Program. The administrative record is available for public inspection in Room 5831 South Building, USDA, 14th and Independence Avenue, SW., Washington, DC. A summary of the economic analysis can be found at the end of this preamble and a copy of the analysis is available upon request from the Director, Easement Programs Division, Natural Resources Conservation Service, Room 6819, Washington, DC 20250–2890 or electronically at: *http://www.nrcs.usda.gov/programs/wrp/* under the *Program Information* title.

Regulatory Flexibility Act

The Regulatory Flexibility Act is not applicable to this interim final rule because the Commodity Credit Corporation (CCC) is not required by 5 U.S.C. 553, or by any other provision of law, to publish a notice of proposed rulemaking with respect to the subject matter of this rule.

Environmental Analysis

A programmatic environmental assessment has been prepared in association with this rulemaking. The analysis has determined that there will not be a significant impact to the human environment and as a result an Environmental Impact Statement is not required to be prepared (40 CFR part 1508.13). The Environmental (EA) Analysis and Finding of No Significant Impact (FONSI) are available for review and comment for 60 days from the date of publication of this interim final rule in the **Federal Register**. A copy of the EA and FONSI may be obtained from the following Web site: *http://www.nrcs.usda.gov/programs/Env_Assess/*. A hard copy may also be requested from the following address and contact: National Environmental Coordinator, Natural Resources Conservation Service, Ecological Sciences Division, 1400 Independence Ave., SW., Washington DC 20250. Comments from the public should be specific and reference that comments provided are on the EA and FONSI. Public comment may be submitted by any of the following means: (1) e-mail comments to *NEPA2008@wdc.usda.gov*, (2) e-mail to e-gov Web site *www.regulations.gov*, or (3) written comments to: National Environmental Coordinator, Natural Resources Conservation Service, Ecological Sciences Division, 1400 Independence Ave., SW., Washington DC 20250.

Civil Rights Impact Analysis

NRCS has determined through a Civil Rights Impact Analysis that the issuance of this rule discloses no disproportionately adverse impacts for minorities, women, or persons with disabilities. Copies of the Civil Rights Impact Analysis are available, and may be obtained from the Director, Easement Programs Division, Natural Resources Conservation Service, P.O. Box 2890, Washington, DC 20013–2890, or electronically at *http://www.nrcs.usda.gov/programs/WRP*.

Paperwork Reduction Act

Section 2904 of the Food, Conservation and Energy Act of 2008 requires that the implementation of this provision be carried out without regard to the Paperwork Reduction Act, Chapter 35 of title 44, United States Code. Therefore, NRCS is not reporting recordkeeping or estimated paperwork burden associated with this interim final rule.

Government Paperwork Elimination Act

NRCS is committed to compliance with the Government Paperwork Elimination Act and the Freedom to E-File Act, which require government agencies in general and NRCS in particular, to provide the public the option of submitting information or transacting business electronically to the maximum extent possible.

Executive Order 12988

This interim final rule has been reviewed in accordance with Executive Order 12988, Civil Justice Reform. The provisions of this interim final rule are not retroactive and preempt State and local laws to the extent that such laws are inconsistent with this interim final rule. Before an action may be brought in a Federal court of competent jurisdiction, the administrative appeal rights afforded persons at 7 CFR parts 11, 614, and 780 must be exhausted.

Federal Crop Insurance Reform and Department of Agriculture Reorganization Act of 1994

Pursuant to section 304 of the Federal Crop Insurance Reform Act of 1994 (Pub. L. 103–354), NRCS classified this rule as non-major. Therefore, a risk analysis was not conducted.

Unfunded Mandates Reform Act of 1995

Pursuant to Title II of the Unfunded Mandates Reform Act of 1995 (2 U.S.C. 1531–1538), USDA assessed the effects of this interim final rule on State, local, and Tribal governments, and the public. This rule does not compel the expenditure of $100 million or more by any State, local, or Tribal governments or anyone in the private sector; therefore, a statement under section 202 of the Unfunded Mandates Reform Act is not required.

Small Business Regulatory Enforcement Fairness Act of 1996

This interim final rule is a major rule as defined by Section 804 of the Small Business Regulatory Enforcement Fairness Act of 1996. This interim final rule will not result in an annual effect on the economy of $100 million or more, a major increase in costs or prices, or significant adverse effects on competition, employment, investment, productivity, innovation, or the ability of U.S.-based companies to compete in domestic and export markets. However, Section 2904(b) and (c) of the Food, Conservation, and Energy Act of 2008 requires that the Secretary use the authority in section 808(2) of title 5, United States Code, which allows an agency to forego SBREFA's usual 60-day Congressional Review delay of the effective date of a major regulation if the agency finds that there is a good cause to do so. NRCS hereby determines that it has good cause to implement this regulation as an interim final rule and have the rule effective immediately in order to meet the Congressional intent to have the conservation programs authorized or amended by Title II in effect as soon as possible. Accordingly, this rule is effective upon filing for public inspection by the Office of the Federal Register.

Executive Order 13132

E.O. 13132 requires NRCS to develop an accountable process to ensure ''meaningful and timely input by State

and local officials in the development of regulatory policies that have federalism implications.'' E.O. 13132 defines the term ''Policies that have federalism implications'' to include regulations that have ''substantial direct effects on the States, on the relationship between the national government and the States, or on the distribution of power and responsibilities among the various levels of government.'' Under E.O. 13132, NRCS may not issue a regulation that has federalism implication, that imposes substantial direct compliance costs, and that is not required by statute, unless the Federal government provides the funds necessary to pay the direct compliance costs incurred by State and local governments, or NRCS consults with State and local officials early in the process of developing the proposed regulation. NRCS shows sensitivity to Federalism concerns by requiring the State Conservationist to meet with and provide opportunities for involvement of State and local governments through the State Technical Committee. This interim final rule will not have substantial direct effects on the States, on the relationship between the national government and the States, or on the distribution of power and responsibilities among the various levels of government as specified in E.O. 13132. Thus, the Executive Order does not apply to this rule.

Executive Order 13175

This interim final rule has been reviewed in accordance with Executive Order 13175, Consultation and Coordination with Indian Tribal Governments. NRCS has assessed the impact of this interim final rule on Indian Tribal Governments and has concluded that this rule will not negatively affect communities of Indian Tribal governments. The rule will neither impose substantial direct compliance costs on Indian Tribal governments, nor preempt Tribal law.

Section 2904 of the Food, Conservation, and Energy Act of 2008

This interim final rule with request for comment amends the existing Wetlands Reserve Program (WRP) regulations. The Commodity Credit Corporation and the Natural Resources Conservation Service (NRCS), an agency of the United States Department of Agriculture (USDA), publishes this interim final rule with request for comment to incorporate programmatic changes as authorized by amendments in the Food, Conservation, and Energy Act of 2008 (2008 Act). The Commodity Credit Corporation (CCC) and the Natural Resources Conservation Service (NRCS) are not required by 5 U.S.C. 553 or by any other provision of law, to publish a notice of proposed rulemaking with respect to the subject matter of this rule. Section 2904 of the 2008 Act requires regulations to be published within 90 days after the date of enactment and authorizes CCC and NRCS to promulgate an interim final rule effective upon publication with an opportunity for notice and comment. CCC and NRCS have determined that an interim final rule is necessary to expedite the effective date of rulemaking in order to meet the intent of Section 2904 of the 2008 Act.

Economic Analysis—Executive Summary

Pursuant to Executive Order 12866, Regulatory Planning and Review, the Natural Resources Conservation Service (NRCS) has conducted a benefit-cost analysis of the Wetlands Reserve Program (WRP) as formulated for the Interim Final Rule. This requirement provides decision makers with the opportunity to develop and implement a program that is beneficial, cost effective, and that minimizes negative impacts to health, human safety, and the environment. Congress passed amendments to the program that requires the Secretary of Agriculture, within 90 days after the enactment of the WRP amendments, to promulgate regulations necessary to carry out the program.

In considering alternatives for implementing WRP, the United States Department of Agriculture (USDA) followed the legislative intent to optimize environmental benefits, address natural resource concerns and problems, establish an open participatory process, and provide flexible assistance to producers who apply appropriate conservation measures that enable the satisfaction of Federal and State environmental requirements. Because WRP is a voluntary program, the program will not impose any obligation or burden upon agricultural producers who choose not to participate. The program has been authorized by the Congress with an acreage target for program participation. Funding for WRP comes from the Commodity Credit Corporation.

The WRP provides technical and financial assistance to eligible landowners to address wetland, wildlife habitat, soil, water, and related natural resource concerns on private lands in an environmentally beneficial and cost-effective manner. As will be discussed later, WRP program costs are the main costs to consider in this analysis. The WRP is an important tool in restoring and protecting wetlands along with the efforts of other governmental agencies, non-profit organizations, and landowners. Land enrolled in WRP can produce substantial improvements in on-site resource conditions and at the same time substantial off-site environmental benefits for the public-at-large can also accrue. These on site and off-site benefits could include: Creation of high value wetlands, control of sheet and rill erosion as lands are converted form cropland to wetlands, creation and protection of habitat for fish and wildlife, including threatened and endangered species and migrating birds; improving water quality by filtering sediments and chemicals; reducing flooding; recharging groundwater; protecting biological diversity; controlling invasive species with planting of natural vegetation; as well as providing opportunities for educational, scientific, and recreational activities. To some extent, air quality could be improved by reduced wind erosion and by an increase in carbon stored in the soil and reestablished vegetation, leading to reduced atmospheric amounts of carbon. Many of these benefits are difficult to quantify, although several studies have attempted to do so. One such study, published in 2008, found that the ''public willingness to pay to enroll an additional acre of typical fresh water marsh in the WRP is about $425 annually.'' Capitalizing this benefit flow at a seven percent rate produced a per acre value of over $5,800 for permanent easement agreements; a value of over $5,200 for 30-year easement agreements; and a value of almost $3,000 on 10-year restoration agreements. Using a three percent discount rate, these values become $10,935, $8,330, and $3,625, for the three types of agreements discussed above, respectively. These values take into consideration private benefits that may be derived, such as income from any fishing, hunting fees, and other recreational activities that may be realized by WRP landowners.

The main program costs include the purchase of easements and wetland restoration expenses with the program. Although agricultural production ceases from lands enrolled in WRP, this output effect is expected to be small given that WRP parcels are usually marginal agricultural lands poorly suited for efficient agricultural production. Agricultural production from lands better suited to agricultural use can easily compensate for reduced production from newly enrolled WRP land. Approximately 89.8 percent of the WRP funding has been used for

permanent easement projects; about 7.9 percent for 30-year easement projects and about 2.4 percent for restoration cost-share agreement projects. The associated FY 2007 average per acre program costs for these projects were estimated at $3,000 for permanent easements, almost $1,100 for 30-year easements, and nearly $670 for restoration cost-share agreements.

A comparison of total economic benefits and costs related to restoring and protecting wetlands on a ''typical acre'' suggests that WRP can produce substantial economic net benefits.

Method of Analysis and Key Results

The method of analysis for this study relied heavily on program managers' experience and assumptions. For example, the analysis team relied on program managers to identify important variables to consider when developing plausible scenarios. The analysis team took this information and constructed a small spreadsheet model. The current policy scenario for this analysis is program performance similar to those in FY 2007 persisting throughout FY 2009–FY 2012. A key variable in this scenario was the FY 2007 easement acquisition valuation methodology: Primarily by an appraisal of the fair market value of a parcel before the easement was in place minus the fair market value of the parcel after the easement was in place—an approach adopted by NRCS on recommendations from the USDA Inspector General's Office. Program managers felt that the post-FY 2007 valuation methodology was the main driver that caused the appraised value of parcels in many states to fall below the state's geographic cap and in turn causing a shift in program acres across states as compared to past years. These changes shifted WRP acreage from states with relatively low acquisition costs to those with relatively high acquisition costs which increased average national per acre WRP costs significantly. The switch in methodology did not result in NRCS paying more for the same easement than it would have paid under the old methodology, but rather significantly reduced the amount the agency could offer to landowners for an easement in some states, causing landowners to lose interest in the program. The current policy scenario assumes that the FY 2007 valuation method will be employed and drives model results that suggest total national WRP acreage would only increase by 294,200 acres over the FY 2009–FY 2012 period.

The changes in the 2008 Act return the valuation methodology to the valuation practices used before FY 2007. As a result, program mangers expect the distribution of acres enrolled in the program to revert back to its previous pattern. This geographic re-positioning is expected to be associated with lower average easement costs (assumed to be the fair market value of land using the Uniform Standards of Professional Appraisal Practices or an area-wide market analysis) and for geographic caps to be the primary means used to determine compensation rates. With the lower geographic per acre project costs becoming more relevant (assumed to be 25 percent lower than FY 2007 levels and those assumed in the baseline scenario), WRP acreage is expected to increase by 600,000 acres over the FY 2009–FY 2012 period—a substantial increase over the continuation of the existing valuation method.

Because per acre benefits exceed costs regardless of policy scenario assumed, all model results suggest that net benefits from WRP are positive.

Conclusions

This WRP benefit-cost analysis assumes that the major driver in program costs over the FY 2009–FY 2012 period will be the method of easement evaluation. The single discretionary policy item available to NRCS does not alter this result. This item pertains to the creation of the Wetland Reserve Enhancement Program (WREP) that would allow States, non-governmental organizations, or Indian tribes to partner with USDA in the selection and funding of contracts, as long as selected contracts meet the purposes of WRP.

Data on past WRP enrollment suggests that the 2008 Act changes related to easement compensation could lead to lower national average per-acre offer prices paid for easements when compared to pre-fiscal year (FY) 2007. This prediction is dependent upon where acreage is predominantly enrolled. NRCS anticipates that the new compensation methodology will encourage re-establishment of historic enrollment patterns. The assumptions in this analysis suggest the per-acre acre average costs on WRP could be reduced by about 25 percent. Although costs are expected to be reduced, there are no environmental studies to suggest that environmental benefits from such a change will be altered. Additional technical information from such sources as the Conservation Effects Assessment Project, plus empirical data on the nature of the types of environmental benefits being generated on WRP land across the United States would be necessary.

Although benefits of wetlands have been estimated on specific sites in a generalized fashion, researchers of many of these past studies caution in transferring benefits to other areas or to be interpreted as ''average'' values of a typical wetland type. That caveat notwithstanding, the conclusions of this analysis suggests that the monetary and non-monetary benefits from WRP in restoring and placing easements on wetlands can exceed total program costs.

Discussion of Program

Background

Wetlands have long been recognized as critical to the environment and ecosystem health. They provide a protective buffer for our towns and cities against floods and storm surges; they are the habitat for hundreds of species; and they connect aquatic and terrestrial ecosystems. The Nation's wetlands provide an array of benefits to society and affect the Nation's economic, ecological, and cultural heritage.

The WRP is a voluntary program providing technical and financial assistance to eligible landowners to restore and protect wetlands. Protecting wetlands provides wildlife habitat, as well as enhancement of soil, water, plants, and related natural resource concerns. Floodplain forests, prairie potholes, and coastal marshes are among the wetlands restored through WRP. More than 2 million acres have been enrolled in WRP since the program's inception.

Title XIV of the Food Agriculture, Conservation, and Trade Act of 1990 (the 1990 Farm Bill), amended the Food Security Act of 1985 to provide for the establishment of the Wetlands Reserve Program. The Secretary of Agriculture delegated responsibility for the WRP to the Agricultural Stabilization and Conservation Service (ASCS), and ASCS published a proposed rule followed by a final rule in 1992. Thereafter, ASCS implemented a pilot program effort in 9 States.

In 1994, ASCS expanded the pilot program implementation of WRP to 20 States and published an interim final rule for the program. Also in 1994, the Department of Agriculture Reorganization Act of 1994 (the Reorganization Act) authorized the establishment of NRCS as the successor agency to the Soil Conservation Service. The Reorganization Act also transferred responsibility for the WRP to NRCS, and NRCS published an interim final rule in June 1995.

Under the NRCS interim final rule, NRCS expanded the program to all 50 States, and made other program adjustments to align WRP with real property acquisition policies. These changes included providing participants with a single payment at easement closing, and the holding of the easement deed by the United States of America in accordance with the Department of Justice Title Standards.

The Federal Agriculture Improvement and Reform Act of 1996 (the 1996 Farm Bill), Public Law 104–387, modified several aspects of WRP, including offering enrollment through a non-easement option, placing equal enrollment priority among the three enrollment methods, and requiring that eligible lands maximize wildlife benefits.

In the August 1996 final rule, NRCS incorporated the changes mandated by the 1996 Farm Bill and responded to comments received to the 1995 interim final rule. The Farm Security and Rural Investment Act of 2002 (the 2002 Farm Bill), Public Law 107–171, expanded the ability of the Secretary to grant a waiver for ownership changes due to foreclosure on the land when the owner of the land exercises a right of redemption from the mortgage holder, in accordance with State law, immediately before the foreclosure. NRCS incorporated this non-discretionary change in a direct final rule published in the **Federal Register** in June 2002.

The 2008 Act made a number of changes to WRP, including raising the enrollment cap to 3,041,200 acres through 2012; limiting program eligibility to private lands and acreage owned by Indian Tribes; determining the rate of compensation for easements or 30-year contracts enrolled in the program; requiring ownership of the land for 7 years under the easement enrollment option; expanding the ranking criteria; and adding a 30-year contract enrollment option on acreage owned by Indian Tribes. In addition, the 2008 Act revises the authority for the Wetlands Reserve Enhancement Program and a grazing rights pilot within that revised program, and makes agricultural lands flooded from the natural overflow of a closed basin lake or pothole within the Prairie Pothole Region eligible for enrollment without requiring that the land be a farmed wetland or converted wetland.

The 2008 Act incorporated two specific changes limiting the participation of public agencies in the implementation of WRP after September 30, 2008. First, the 2008 Act limited enrollment of eligible land to private land and acreage owned by Indian Tribes. In this manner, lands owned by a State Department of Natural Resources could not be enrolled in the program, even if the operator of those lands was a private individual. Previously, such lands were eligible for enrollment.

Second, Section 1603(f)(6) of the 1985 Act, as amended by Title I of the 2008 Act, provides that a State or local government is not eligible to receive any payment, benefit, or loan under Title XII of the 1985 Act. This prohibition includes WRP easement and restoration payments. Therefore, NRCS identifies how it will address these limitations upon public agency participation dependent upon which stage of the process a project was as of October 1, 2008.

For land that was enrolled in WRP and was owned by a public entity prior to October 1, 2008, NRCS will complete the acquisition and restoration of the project and make appropriate payment to the public entity. The rationale for completing the acquisition and restoration is that a recent change in the NRCS business process, which separates the dates of obligation of acquisition and restoration and thereby results in the obligation for restoration to occur several months later than the obligation for acquisition, has delayed obligation of restoration funds beyond the control of state and local governments. Although restoration funds for the project will not be obligated to such projects until after October 1, 2008, NRCS has determined that restoration payments are appropriate because government entities were eligible to receive restoration payments when the land was enrolled or purchased because the restrictions on public lands eligibility in the WRP statute and on payments to government entities in Section 1603(f)(6) of the 1985 Act, as amended by the 2008 Act, did not go into effect until October 1, 2008. The WRP statute authorizes NRCS to cost-share to the extent the Agency determines that cost-share is appropriate and in the public interest.

For land that was enrolled in WRP and was owned by a private person or legal entity or Indian Tribe prior to October 1, 2008, but on or after October 1, 2008, the private landowner or Tribe transfers ownership of the land to a public entity, NRCS will cancel the enrollment if the easement acquisition has not been completed.

For land that was enrolled in WRP and was owned by a private person or legal entity or Indian Tribe prior to October 1, 2008, but on or after October 1, 2008, the private landowner or Tribe transfers ownership of the land to a public entity, and NRCS has completed the easement acquisition and made payment to the private landowner, NRCS will not cancel the enrollment. The easement will remain in place; and no refund will be sought from the private landowner. However, NRCS will not obligate funds to restore the land encumbered by the easement because NRCS has determined that it is not authorized to make payment to the public entity owner because of the restrictions in Section 1603(f)(6) of the 1985 Act, as amended by the 2008 Act. NRCS will work with the new public entity landowner to encourage the public entity to implement the provisions of the NRCS-approved WRPO at its own expense.

If the private land or acreage owned by an Indian tribe is enrolled after September 30, 2008, and prior to completion of the restoration activities the land is acquired by a public entity, NRCS will not obligate funds for restoring the land encumbered by the easement because NRCS has determined that it is not authorized to make payment to the public entity owner because of the restrictions in Section 1603(f)(6) of the 1985 Act, as amended by the 2008 Act. Further, NRCS will consider failure to complete restoration of the wetlands a violation of the terms of enrollment. As a violation, under the WRP statute, NRCS has the right to have the easement remain in force and to seek a refund of payments made in furtherance of the enrollment. A violation may be avoided if the new public entity landowner implements all provisions of the NRCS-approved WRPO at its own expense.

Summary of 2008 Act Changes

The 2008 Act amended the Wetlands Reserve Program to:

- Add a new enrollment method for Tribal lands through 30-year contracts;
- Expand land eligibility under WRP to cropland or grassland that was used for agricultural production prior to flooding from the natural overflow of a closed basin lake or pothole, as determined by the Secretary, together (where practicable) with the adjacent land that is functionally dependent on the cropland or grassland;
- Require that an easement cannot be created on land that changed ownership within the previous 7-year period. Previously, the ownership requirement was for 12 months;
- Limit eligible land to private or tribal land;
- Add restoration, protection and enhancement of wetlands as WRP purposes;

• Revise the authority for the Wetlands Reserve Enhancement Program;

• Require NRCS to conduct a survey of the prairie pothole regions to inform the allocation process of WRP funds to that region;

• Base easement compensation on the lowest of three values: The fair market value of the land determined through either an appraisal or market analysis; a geographic cap; or the landowner offer;

• Establish an easement compensation payment schedule depending upon the value of the easement;

• Require a yearly payment limitation for restoration cost-share agreements of $50,000 per year and to clarify that the $50,000 yearly restoration cost-share payment limitation applies to any person or legal entity;

• Extend the existing waiver of the $50,000 yearly payment limitation to 30-year contracts;

• Identify that maintenance is an activity eligible for cost-share assistance;

• Add ranking criteria regarding maximizing environmental benefits; and

• Allow the spraying or mowing of land enrolled in the program if necessary to meet habitat needs of specific wildlife species.

Section by Section Analysis

Section 1467.1 Applicability

The term ''Department'' is changed to ''NRCS'' where it occurs in § 1467.1 and throughout the regulation to clarify that NRCS implements the program and disburses payments to participants. Prior to 2002, the Farm Service Agency (FSA) disbursed WRP payments on behalf of CCC. In 2002, NRCS assumed responsibility for disbursing WRP payments.

The reference to processing outstanding and new applications for enrollment during calendar year 1995 has been removed as moot. There are no longer any outstanding applications from prior to 1995. The reference to the Trust Territories of the Pacific Islands has been removed to reflect more accurately the geographic scope of the program.

Section 1467.2 Administration

Section 1467.2(c) that required concurrence between NRCS and FSA related to WRP policies, priorities and guidelines is removed, reflecting that the program has been delegated to NRCS. NRCS and FSA concurrence remains a program requirement under Section 246 of the Department of Agriculture Reorganization Act (Pub. L. 103–354; 7 U.S.C. 6962(c)). NRCS and FSA will continue its working relationship regarding coordination of WRP policies with FSA activities, especially in the case where CRP and WRP enrollment are impacted by the county acreage cap limitations.

Section 1467.2(d) is re-designated as § 1467.2(c) and revised to clarify that the role of the State Technical Committee is to advise rather than consult with NRCS in program implementation. Given the regulatory connotation associated with consultation requirements under the Endangered Species Act, NRCS determined that the term ''advice'' better reflects the relationship between NRCS and the State Technical Committees. Additionally, this paragraph is revised to clarify that the advice of the State Technical Committee will be sought in the development of the geographic area rate caps of compensation which is addressed more fully in § 1467.8.

Section 1467.2(e) is re-designated as § 1467.2(d) and revised to clarify that other Federal and State agencies to which NRCS may delegate easement management responsibilities must have the needed authority, expertise, and resources to carry out the responsibilities. This clarification will ensure that this authority is implemented as intended by statute. Throughout WRP program implementation, NRCS has worked in close partnership with other Federal and State agencies regarding management of adjacent and contiguous conservation areas, and will continue to do so.

Section 1467.2(f) is re-designated as § 1467.2(e) and incorporates the term ''technical assistance'' in the language regarding the use of cooperative agreements to obtain services from other agencies and organizations. ''Technical assistance'' is defined in section 2001 of the 2008 Act, and is used in this regulation to cover the various forms of assistance that other parties may provide rather than listing specific types of assistance.

Section 1467.2(g) is re-designated as § 1467.2(f) and clarifies that the role of the U.S. Department of the Interior's Fish and Wildlife Service (FWS) is in consultation regarding land eligibility. The additional references to FWS and the Forest Service are removed, because the authority to consult with other Federal or State agencies on issues related to WRP implementation is covered in other parts of the regulation and is redundant here. References to the U.S. Department of the Interior's Fish and Wildlife Service have been changed to ''FWS'' where it occurs throughout the regulation to streamline terminology.

Section 1467.2 (h) is re-designated as § 1467.2(g) and expands authority for the Chief of NRCS to allocate funding pools to encourage program participation among historically underserved producers as authorized by Section 1244 of the Food Security Act of 1985, as amended (16 U.S.C. 3844).

Section 1467.3 Definitions

Definitions of the terms used in this regulation are set forth in § 1467.3 to provide consistent interpretations for the public and for NRCS personnel. These definitions are consistent with statutory changes and with the revisions to 7 CFR part 1467 contained herein.

The term ''*Acreage owned by Indian Tribes*'' is added to define the term as used by the amendment made by the 2008 Act. The term is defined broadly to include lands held in trust for Indian Tribes, and to increase program accessibility and to allow for the greatest opportunity for Indian Tribal participation in the program through the use of 30-year contracts, which may be more conducive to requirements on trust lands, which are owned by the Tribe, but held in trust by another agency or entity.

The term ''*Activity*'' is added to define the meaning of the term used in the regulation and refer to maintenance and management activities that are essential parts of a restoration agreement. The statute specifies that cost-share payments may be provided for management and maintenance activities, which does not always involve a full conservation practice.

The term ''*Agreement*'' is added to specify that it is a legal document that describes the rights and obligations of NRCS and program participants.

The term ''*Agricultural commodity*'' is revised to reflect the definition provided in § 1201(a)(1) of the Food Security Act of 1985, as amended, providing consistency with other Title XII programs.

The term ''*Beginning farmer or rancher*'' is added to clarify who is eligible to be enrolled under provisions specific to historically underserved producers, which is referenced under § 1467.2(g).

The term ''*Conservation district*'' is revised to reflect the definition provided in § 1201(a)(5) of the Food Security Act of 1985, providing consistency with other Title XII programs.

The term ''*Conservation practice*'' replaces the term ''*practice*,'' and clarifies that conservation practices implemented in WRP meet NRCS

standards and specifications, and provides a consistent definition across all easement programs.

The term ''*Contract*'' is revised to clarify that it is a legal document that specifies the rights and obligations of NRCS and program participants.

The term ''*30-year Contract*'' is added to reflect the statutory addition of the 30-year contract enrollment option for acreage owned by Indian Tribes.

The term ''*Converted wetland*'' is revised to reflect the definition in § 1201(a)(7) of the Food Security Act of 1985, as amended, providing consistency with other Title XII programs.

The term ''*Cost-share payment*'' is revised to clarify that payments are made to carry out conservation practices and activities on enrolled lands.

The term ''*Department*'' is removed. References to ''Department'' throughout 7 CFR part 1467 are replaced with ''NRCS,'' the Natural Resources Conservation Service, an agency of the U.S. Department of Agriculture responsible for carrying out the program.

The term ''*Easement payment*'' is revised to include the consideration paid to an Indian Tribe or to tribal members participating through the 30-year contract option, because the managers expressed that the 30-year contract option would provide the same payment as a 30-year easement, but would not be a real property transaction.

The term ''*Easement Restoration Agreement*'' is added to specify that an easement restoration agreement will be the agreement used to implement the Wetland Restoration Plan of Operations (WRPO) for easements and 30-year contracts and mechanism for providing cost-share assistance to participants to carry out restoration and maintenance as planned in the WRPO under such enrollments.

The term ''*Forest Service*'' is removed as it is duplicative to all-inclusive references to ''other Federal and State agencies'' throughout the regulation.

The term ''*Fish and Wildlife Service (FWS)*'' replaces the term ''U.S. Fish and Wildlife Service'' and such term refers to the same agency within the United States Department of the Interior.

The term ''*Historically underserved producer*'' is added to refer to the specific groups of producers to which the Chief may direct funding through funding pools specifically to encourage participation, and to provide consistency with related conservation programs administered by NRCS.

The term ''*Indian Tribe*'' is added and adopts the definition in § 4(e) of the Indian Self-Determination and Education Assistance Act (25 U.S.C. 450b(e)).

The term ''*Landowner*'' is revised to reflect that such term includes legal entities and refines the applicability of the term from the overly broad term ''farmland'' to eligible land since the 2008 Act amended the WRP statute to limit eligibility to private and Tribal lands, including lands held in trust for Indian tribes. ''Remaindermen in a farm property'' is removed because remaindermen in a property do not have a current legal ownership of the land.

The term ''*Legal entity*'' is added to respond to statutory changes, which limit eligible land to private and Tribal land and place a payment limitation to a person or a legal entity. The term ''*limited resource farmer or rancher*'' is added to clarify who is eligible to be enrolled under provisions specific to historically underserved producers at § 1467.2(g).

The term ''*Maintenance*'' is added to reflect statutory changes that incorporate maintenance as a cost-sharable activity.

The term ''*Natural Resources Conservation Service*'' is revised to clarify that NRCS carries out program implementation using the funds, facilities, or authorities of the Commodity Credit Corporation (CCC). In the definition ''Department'' is replaced with ''NRCS'' and reference to the Soil Conservation Service is removed.

The term ''*Option agreement to purchase*'' is added to describe the legal document used to authorize NRCS to proceed with the easement acquisition process and which binds the landowner to sell a conservation easement upon exercise of the option by NRCS.

The term ''*Participant*'' is added to simplify reference throughout the regulations to persons or legal entities who have been accepted to participate in the program.

The term ''*Person*'' is revised in response to statutory changes that eliminated governmental entity eligibility under the program. The term ''person'' now refers only to a natural person, a legal entity, or an Indian Tribe, but does not include governments or their political subdivisions.

The term ''*Prairie Pothole Region*'' is added to reflect statutory changes requiring an assessment of program demand in the ''Prairie Pothole Region'' and consideration of those needs in allocation formulas. The definition establishes the geographic scope of the prairie pothole region, as it existed on June 18, 2008.

The term ''*Private land*'' is added to reflect statutory changes that excluded land owned by State and local governments from being eligible to enroll in the program.

The term ''*Restoration Cost-Share Agreement*'' is added to clarify that the restoration agreement is the contract used to describe the rights and obligations of participants who have been accepted to participate in the WRP restoration cost-share enrollment option. This agreement is used to carry out the WRPO and to identify the cost-share assistance NRCS will provide to the participant for implementing the conservation practices and activities in the Wetland Restoration Plan of Operations.

The term ''*Riparian areas*'' is revised to correct the spelling of the word ''vegetative.''

The term ''*Socially disadvantaged farmer or rancher*'' is added to clarify who is eligible to be enrolled under provisions specific to historically underserved producers at § 1467.2(g).

The term ''*State technical committee*'' is revised to remove unnecessary reference to the State Conservationist as the chair of the committee; this role is established through regulations found at 7 CFR 610.22(a).

The term ''*United States Department of Agriculture (USDA)*'' replaces the use of the term ''U.S. Department of Agriculture.''

The term ''*Wetland*'' is amended to remove adjacent lands from the definition of wetland for consistency with the statute. Adjacent uplands, while they may be eligible for the program, are technically not wetlands.

The term ''*WRP*'' has been removed as unnecessary since the term is adequately described in § 1467.1.

The term ''*Wetlands Reserve Plan of Operations (WRPO)*'' is revised to add the definition of the WRPO and describe the purpose of this conservation plan. In particular, the WRPO is the conservation plan that identifies how the wetland functions and values will be restored, improved, and protected and which is approved by NRCS.

Section 1467.4 Program Requirements

Section 1467.4(a) is revised to incorporate the statutory addition of the 30-year contract enrollment option available only on acreage owned by Indian Tribes. Additionally, § 1467.4(a) is revised to clarify that cost-share assistance under the easement or 30-year enrollment option will be provided through the easement restoration agreement and that cost-share assistance under the restoration cost-share enrollment option will be provided

through the restoration cost-share agreement.

Section 1467.4(b) is revised to remove reference to CRP easements with respect to a county cap limitation since this enrollment option is not provided through the existing CRP. Additionally, the 2008 Act removed the ability to waive the 10% limitation of cropland that can be enrolled through an easement option under WRP. Therefore, this paragraph has been revised to reflect the 2008 Act amendments.

Section 1467.4(c) is revised to clarify that eligible program participants are persons or legal entities or Indian Tribes and are subject to the adjusted gross income (AGI) limitation and highly erodible land and wetland compliance provisions of the Food Security Act of 1985, as amended. Indian Tribes are exempted from the AGI and payment limitations by 7 CFR Part 1400.600(g).

Section 1467.4(c)(2) is revised to reflect the statutory change in required ownership period from 12 months to 7 years. NRCS will determine the 7-year ownership requirement at the time NRCS determines the eligibility of the land offered for enrollment. Previously, NRCS measured ownership duration at the time of application. However, NRCS determined that as an eligibility criterion, ownership duration should be determined as part of the eligibility review of a project.

A new § 1467.4(d)) is added to specify that land that is accepted for enrollment in an easement, but is sold or transferred prior to the easement being perfected will be removed from enrollment. The new landowner may file a new application so that all landowner eligibility criteria may be examined and documented appropriately. However, the land eligibility, ranking, and other administrative determinations that relate to the land will remain valid for the remainder of the funding cycle.

Section 1467.4(d) is redesignated as § 1467.4(e) and is revised to reflect the requirement made by the 2008 Act amendments that land must be private land or acreage owned by Indian Tribes to be eligible for WRP.

Section 1467.4(e)(3), formerly § 1467.4(d)(2), is revised to provide the new eligible land category for flooded lands within a closed basin lake or pothole as established by the amendments in the 2008 Act. This change authorizes the enrollment of lands that are currently inundated.

Section 1467.4(e)(4) is revised to add clarity related to lands that may be considered farmed wetland or converted wetland, and conform to revisions made in § 1467.4(e)(3). The lands identified were previously identified in regulation but the revision ties their identification more clearly to statutory criteria.

Section 1467.4(e)(5) Prairie Pothole Region adds new language to provide eligibility criteria for land being enrolled under the new eligibility category of flooded lands in a closed basin located in the Prairie Pothole Region as defined in § 1467.3. The Prairie Pothole Region is defined as the counties designated as part of the Prairie Pothole National Priority Area for CRP as of June 18, 2008. This designation is chosen because it is clearly delineated and is already an established and well-known designation. The 2008 Act amendments require that lands under this section maximize wildlife benefits and wetland values and functions and be restorable. In order for a wetland to be restorable, the soils must be hydric, and the depth of the water cannot exceed 6.5 feet because water over this level is considered open water, not a wetland. The minimum size requirement of 20 contiguous acres is included to focus enrollment on lands that are not eligible under the Conservation Reserve Program Flooded Farmland program, which allows enrollment of parcels under 20 contiguous acres in size.

Section 1467.4(e)(6) restructures language previously under § 1467.4(d)(3)(iii) through (vi) regarding eligibility of lands adjacent to land eligible under § 1467.4(e)(3). The change results in increased cohesiveness in the description of eligible lands and more clearly comports with statutory intent by rewording the existing language. Land identified in this paragraph may include types of land that could be considered eligible under § 1467.4(e)(3). For example, paragraph (e)(6) identifies restored wetlands as eligible adjacent lands. However, some restored wetlands that are not adjacent to eligible land may be identified as farmed wetlands and thus eligible under § 1467.4(e)(3), while other restored wetlands may not have an agricultural history, and thus would only be eligible as adjacent eligible land under paragraph (e)(6). The identification of restored wetlands under paragraph (e)(6) is not intended to preclude the enrollment of restored agricultural wetlands under § 1467.4(e)(3), but to facilitate the enrollment of restored adjacent non-agricultural wetlands if their enrollment furthers the functions and values of eligible agricultural wetlands.

Section 1467.4(e)(7) is revised to clarify that eligible land must be configured with boundaries that allow for efficient management for the program purposes, as determined by NRCS, by changing the term ''easement'' to ''program.''

Section 1467.4(g)(3) is revised by clarifying that land held in trust for Indian Tribes, though owned by an agency of the United States, is not ineligible. Section 1467.4(g)(4) adds language incorporating the statutory change that lands owned by State and local units of government are not eligible for WRP. Section 1467.4(g)(5) also revises the language describing when an existing deed restriction causes land to be ineligible for participation to provide more administrative flexibility to determine whether wetland functions and values are adequately protected by such restrictions. When existing restrictions provide adequate wetland protection benefits, WRP enrollment is superfluous and unnecessary. In Section 1467.4(g)(6) NRCS provides examples of the types of lands where implementation of restoration practices would be undermined due to on-site or off-site conditions.

Section 1467.5 Application Procedures

The requirement that applications must be submitted during an announced period for such submissions is removed from § 1467.5(a), because NRCS provides for continuous enrollment in WRP.

In § 1467.5(b) the term ''Department'' is replaced with ''NRCS.''

NRCS has removed paragraph (c) since the criteria about reduced easement cost as a ranking factor is addressed in revisions made to § 1467.6.

Section 1467.6 Establishing Priority for Enrollment of Properties in WRP

Section 1467.6(a) is removed to eliminate duplicative language related to enrollment priorities from this regulation. Section 1467.6(b) is re-designated as § 1467.6(a) and clarifies that the same ranking considerations apply to all enrollment options. Language is added to reflect additional ranking considerations added to the WRP statute by the 2008 Act. Section 1467.6 now reflects the priorities identified in the WRP statute, including: The conservation benefits of obtaining an easement, or other interest in the land; the cost effectiveness of each easement or other interest in eligible land, so as to maximize the environmental benefits per dollar expended; whether the landowner or another person is offering to contribute financially to the cost of the easement or other interest in the land to leverage Federal funds; the extent to which the purposes of the easement program would be achieved on the land; the productivity of the land; and the on-

farm and off-farm environmental threats if the land is used for the production of agricultural commodities.

Section 1467.6(b) is added to reflect existing statutory language that, in consideration of the costs and future agricultural food needs, gives priority to permanent easements over shorter-term easements, and acquiring easements based on habitat value for migratory birds and other wildlife, to the extent practicable. The language was added because it had not been previously clearly addressed in the regulation.

Section 1467.6(c) is revised to include consultation with the State Technical Committee when placing higher priority on specific geographic areas. This change is intended to incorporate State, local, and non-governmental organization input when designating a priority area.

Section 1467.6(d) is revised to remove reference to enrolling eligible lands at any time to achieve the program objectives. WRP operates on a continuous enrollment basis so this language is unnecessary. This paragraph is also revised to clarify that eligible land may be excluded from enrollment if the adjacent land is needed for successful restoration of the property and the adjacent landowner, though willing to participate, is ineligible to participate.

Section 1467.6(e) is added to provide guidelines for the Prairie Pothole Region Assessment and Reallocation as required by the statute. These guidelines and the rationale for the changes are included in the description of the changes to § 1467.4(e)(5).

Section 1467.7 Enrollment Process

Section 1467.7 is revised to include changes to the NRCS business process as a result of experience gained in operating the WRP. These revisions require steps related to land valuation, preliminary title work, and all appropriate inquiries and record searches to be completed prior to the offer to the landowner. These steps had previously been performed after the obligation of NRCS funds and resulted in de-obligation of funds when issues related to these steps could not be resolved. These revisions streamline program implementation and are intended to help reduce the number of applicants having to exit the enrollment process due to irresolvable issues, such as title issues and hazardous substance problems.

In addition, § 1467.7 is revised to confirm that land is enrolled in the program when the landowner and NRCS enter into an option agreement to purchase an easement, a 30-year contract, or a restoration cost-share agreement. Previously, when acreage enrollment goals were by calendar year and funding availability by fiscal year, land was enrolled in WRP when the landowner executed a notice of intent to continue in response to the NRCS offer of tentative acceptance into the program. The 2008 Act modified the acreage enrollment goals to be by fiscal year, and thus NRCS determined that it improved administrative consistency to have the time of enrollment to coincide when funds were obligated to a project through the execution of a program agreement.

Section 1467.7(c) is revised to clarify that the option agreement to purchase, which becomes the contract for sale when signed by NRCS, stipulates the NRCS and landowner obligations and responsibilities, particularly regarding restoration and future sales. This is necessary, in part, to describe NRCS and landowner responsibilities if the land is sold to a party who is unwilling to assume restoration or is ineligible for NRCS cost-share assistance for restoration. The option agreement to purchase may also include payment schedules for easements valued at more than $500,000, consistent with the payment schedule for such easements authorized by the 2008 Act.

Additionally, this section is expanded to incorporate additional material regarding enrollment through a 30-year contract or a restoration cost-share agreement. In particular, a participant accepts enrollment in the program by signing the 30-year contract or the restoration cost-share agreement.

The existing § 467.7(d) is revised and incorporated into the new § 1467.7(c) described above.

The existing § 1467.7(e) is re-designated as § 1467.7(d) and is revised to clarify under what conditions NRCS may withdraw an offer of enrollment. Sale of the land enrolled prior to easement closing or risk of hazardous substances are added as examples of such conditions.

Section 1467.8 Compensation for Easements and 30-Year Contracts

The caption for § 1467.8 is changed from ''Compensation for easements'' to ''Compensation for easements and 30-year contracts'' to reflect the addition by the 2008 Act of the 30-year contract enrollment option for acreage owned by Indian Tribes. The statute requires that compensation for 30-year contracts and 30-year easements be equivalent.

Section 1467.8 is also revised to reflect the statutory easement compensation language in the 2008 Act, which became effective immediately upon enactment. In particular, the 2008 Act provided that NRCS shall pay as compensation the lowest of the following: (i) The fair market value of the land using the Uniform Standards for Professional Appraisal Practices, or based on an area-wide market analysis or survey; (ii) the geographic area rate cap determined under paragraph (a)(4) of this section; or (iii) the landowner offer. The revisions to § 1467.8 implement the new compensation methods, including the equivalence of 30-year contracts and 30-year easements, as required by statute. This section is also revised to clarify the process for setting and approving the geographic area rate cap. The actual method and data sources for determining a geographic rate cap have not changed from the existing regulation. The changes were made to require that the State Technical Committee provide advice on establishment of the caps, and that the caps for each state must be approved by the Chief. In this manner, NRCS may ensure nationwide consistency and equitable treatment of participants across State boundaries. Advice on establishment of the geographic rate cap is limited to the State Technical Committee to ensure consistency among states in developing fair compensation rates which will encourage participation while ensuring prudent investment of the public dollar. Payment schedule and payment limitations are revised to reflect the 2008 Act. This section is also revised to address when a waiver to installment payments is allowed for easements that cost in excess of $500,000. NRCS will make a single payment when such payment will result in the restoration, protection, or enhancement of wetlands on eligible land, unless installment payments are requested by the landowner. Single payments facilitate the administrative efficiency of the program, especially in situations where the landowner must negotiate subordination of mortgages or other liens in order to provide clear title to the easement area.

Section 1467.8(b) contains language related to the acceptance of easement compensation that previously existed at § 1467.8(e). Additionally, this section is revised to incorporate the payment timing and method prescribed by statute.

Section 1467.8(c), previously § 1467.8(f), includes minor changes to provide clarity that reimbursement for surveys are for legal boundary surveys.

Language in the existing regulation at § 1467.8(h) regarding payment limitations is deleted and incorporated in new § 1467.10(a)(3).

Remaining sections have been re-designated to accommodate the above section re-designations.

Section 1467.9 Wetlands Reserve Enhancement Program

Section 1467.9, Cost-share Payments, is re-designated as § 1467.10. A new § 1467.9 is added to incorporate provisions for implementing the new Wetlands Reserve Enhancement Program (WREP) created by the statute. WREP provides the authority to enter into agreements with States (or subdivisions), nongovernmental organizations, and Indian Tribes to advance the purposes of WRP. WREP will operate through an announcement of funding in the **Federal Register**. Proposals will be submitted to the appropriate State Conservationist for initial review, and recommended proposals will be provided to the Chief by the State Conservationists for nationwide ranking and final selection. NRCS believes that WREP will facilitate the identification of unique enrollment opportunities that are of regional or National significance, and thus beyond the normal purview of State-level selection processes. However, selected proposals and associated funding will be provided through the applicable State Conservationists in order to enter into the WREP agreement with the eligible partner.

Section 1467.9(b) includes language for implementing a reserved rights pilot authorized by the statute. Participants in the reserved rights pilot are subject to the general eligibility and program administration requirements established for this part. Under the reserved rights pilot, landowners who wish to reserve grazing rights in the grazing rights pilot deed or 30-year contract must comply with a WRPO which includes the location, timing, intensity, frequency, and duration of grazing. The Managers Report language states that activities occurring under a reserved rights easement or 30-year contract shall be covered by a conservation plan that is developed and approved by NRCS. NRCS intends to compile, evaluate, and make available information acquired through its monitoring of projects enrolled through WREP in general, and the reserved rights pilot specifically, to ascertain the benefits gained through these programmatic options.

The Managers Report also states that NRCS should explore different types of warranty easement deeds consistent with the purposes of the program, which will allow landowners to retain the right to use the land for grazing purposes. The reserved rights pilot will use template deeds and 30-year contracts, which will be made public concurrent with the announcement of availability of the pilot.

Section 1467.9(b)(4) on compensation describes that the value of retained grazing rights will be considered in establishing compensation. The value of the retained grazing rights, set by either a Uniform Standards for Professional Appraisal Practices (USPAP) appraisal or a market survey, is subtracted from the fair market value of the land; in setting geographic area rate caps, a value for grazing rights must be subtracted from the established geographic rate cap for the area.

Section 1467.10 Cost-Share Payments

As mentioned above, § 1467.9 ''Cost-share payments'' is re-designated as § 1467.10 and revised to incorporate 30-year contracts and to improve readability.

Language is included throughout this section to accommodate the inclusion of maintenance as an activity that is eligible for cost-share. Changes throughout this section clarify that conservation practices and activities, as defined in § 1467.3, are eligible for cost-share. Maintenance is included in the definition of activity under § 1467.3.

Section 1467.10(a)(3) is added to provide language for implementing the $50,000 annual payment limitation for restoration cost-share agreements, consistent with the statutory requirements of the 2008 Act amendments.

Sections 1467.10(b), (c), and (d) are revised to more fully describe the items for which cost-share is available within the WRPO. These items include measures, activities, and components of conservation practices which may be necessary for alleviating problems or improving a conservation treatment, including as a maintenance activity.

Section 1467.10(e) is added to clarify that the participant with the contractual obligation with NRCS will be responsible for completing restoration if land enrolled in WRP is sold to a new landowner who is unwilling, ineligible, or unable to complete the restoration. Eligible new landowners who agree to the transfer of the responsibilities under the easement restoration agreement or restoration cost-share agreement, as applicable, may receive cost-share assistance for restoration if all requirements for payment are met. NRCS will seek refund of payments if the participant with the contractual obligation or the new landowner fail to implement the required restoration as specified in the WRPO.

Section 1467.11 Easement and 30-Year Contract Participation Requirements

Section 1467.10, Easement participation requirements, is re-designated as § 1467.11. This section is revised by adding a new § 1467.11(b) to make the requirements also applicable to 30-year contracts. The requirements for participation under the 30-year contract option mirror the easement participation requirements, except where necessary to reflect that the 30-year easement is not a real property right such as an easement but a contractual arrangement between NRCS and an Indian Tribe or tribal member. Additional minor revisions are made to § 1467.11 for administrative clarity and streamlining. This section is also modified to clarify that the restoration of lands enrolled in WRP is the responsibility of the participant.

Section 1467.11(e) is added to include the requirement that for all lands enrolled in WRP, NRCS shall develop a WRPO, which will be implemented by the participant. This WRPO will be signed by both NRCS and the participant. This language is added to further clarify the participant responsibilities when enrolled in the WRP.

Section 1467.12 The WRPO Development

Section 1467.11 is re-designated as § 1467.12. This section contains only minor changes to clarify that NRCS is the USDA agency with responsibility for developing the WRPO.

Section 1467.13 Modifications

Section 1467.12 is re-designated as § 1467.13, Modifications.

Section 1467.13(a)(4) clarifies that the Chief will approve modifications and under what circumstances modifications may be approved; this language was previously included in the WRP Manual and is now being incorporated in the rule to provide clarification for the level of approval for modifications. The Chief reserves the authority to approve modifications to ensure the long-term integrity of NRCS easements.

Section 1467.13(b) is revised to require agreement and signatures from the participant and NRCS for a modification to the WRPO. These changes will ensure protection of the Federal investment.

Section 1467.14 Transfer of Land

Section 1467.13 is re-designated as § 1467.14. Section 1467.14(a) clarifies what constitutes a transfer of land and the impact of the transfer. In cases

where the transfer of land meets conditions described under § 1467.4(c)(2), the State Conservationist must cancel the application; however, the new landowner may re-apply so that a determination of landowner eligibility may be made and properly documented. The land eligibility, ranking, and other administrative determinations that relate to the land will remain valid for the remainder of the funding cycle. This revision is made to comply with the 7-year ownership language added by the 2008 Act amendments. Language previously included in the existing regulation under payments to landowners is revised and moved to § 1467.10(e).

Section 1467.15 Violations and Remedies

Section 1467.14 is re-designated as § 1467.15 and is re-structured to provide separate language for violations of easements, 30-year contracts, and restoration cost-share agreements consistent with the statutory language. New language is also added to provide for cost recovery of payments, plus interest, when agreements or contracts are terminated.

Section 1467.16 Payments Not Subject to Claims

Section 1467.15 is re-designated as § 1467.16 and the term ''contract'' is added to the list of payment types to reflect the statutory change to include a 30-year contract option for acreage owned by Indian Tribes.

Section 1467.17 Assignments

Section 1467.16 is re-designated as § 1467.17.

Section 1467.18 Appeals

Section 1467.17 is re-designated as § 1467.18. Section 1467.18(b) is revised to clarify that appeals procedures apply to administrative actions such as determination of eligibility.

Section 1467.18(d) is added to further clarify that enforcement actions taken by NRCS are not subject to review under administrative appeal regulations because a landowner's activities related to easement deed restrictions are subject to rights held by the United States, and thus a landowner cannot be adversely affected in an administrative sense by the enforcement of these Federal rights. This language is consistent with the appeal regulations at 7 CFR part 614 and federal real property law.

Section 1467.19 Scheme and Device

Section 1467.18 is re-designated as § 1467.19 and revised at § 1467.19(b) to include 30-year contracts in the list of payment types to reflect the statutory addition of the 30-year contract option for acreage owned by Indian Tribes.

Section 1467.20 Market-Based Conservation Initiatives

Section 1467.20 is a new section. Section 1467.20(a) is added to address the Secretary's new authority to accept and use contributions. Section 2702 of the 2008 Act authorizes the Secretary to accept and use contributions of non-Federal funds to support the purposes of the program. The statutory language provides that these funds are available to the Secretary without further appropriation and until expended, to carry out the program.

Section 1467.20(b) is added to clarify that the NRCS does not assert any interest in the generation of environmental credits such as carbon, water quality, biodiversity, or wetlands preservation on land enrolled in the program other than to ensure that activities performed by the participant to obtain these credits are not contradictory to the purposes of the program.

Section 2708, ''Compliance and Performance'', of the 2008 Act added a paragraph to Section 1244(g) of the 1985 Act entitled, ''Administrative Requirements for Conservation Programs,'' which states the following:

''(g) Compliance and performance.—For each conservation program under Subtitle D, the Secretary shall develop procedures—

(1) To monitor compliance with program requirements;

(2) To measure program performance;

(3) To demonstrate whether long-term conservation benefits of the program are being achieved;

(4) To track participation by crop and livestock type; and

(5) To coordinate activities described in this subsection with the national conservation program authorized under section 5 of the Soil and Water Resources Conservation Act of 1977 (16 U.S.C. 2004).''

This new provision presents in one place the accountability requirements placed on the Agency as it implements conservation programs and reports on program results. The requirements apply to all programs under Subtitle D, including the Wetlands Reserve program, the Conservation Security Program, the Conservation Stewardship Program, the Farm and Ranch Lands Protection Program, the Grassland Reserve Program, the Environmental Quality Incentives Program (including the Agricultural Water Enhancement Program), the Wildlife Habitat Incentive Program, and the Chesapeake Bay Watershed initiative. These requirements are not directly incorporated into these regulations, which set out requirements for program participants. However, certain provisions within these regulations relate to elements of Section 1244(g) of the 1985 Act and the Agency's accountability responsibilities regarding program performance. NRCS is taking this opportunity to describe existing procedures that relate to meeting the requirements of Section 1244(g) of the 1985 Act, and Agency expectations for improving its ability to report on each program's performance and achievement of long-term conservation benefits. Also included is reference to the sections of these regulations that apply to program participants and that relate to the Agency accountability requirements as outlined in Section 1244(g) of the 1985 Act.

Monitor compliance with program requirements. NRCS has established application procedures to ensure that participants meet eligibility requirements, and follow-up procedures to ensure that participants are complying with the terms and conditions of their contractual arrangement with the government and that the installed conservation measures are operating as intended. These and related program compliance evaluation policies are set forth in Agency guidance (440 CPM_519) (*http://directives.sc.egov.usda.gov/*).

The program requirements applicable to participants that relate to compliance are set forth in these regulations in § 1467.4, ''Program Requirements,'' § 1467.10, ''Cost-Share payments,'' and § 1467.11 ''Easement and 30-year contract participation requirements.'' These sections make clear the general program eligibility requirements, participant obligations for implementing a WRPO, and participant program obligations.

Measure program performance. Pursuant to the requirements of the Government Performance and Results Act of 1993 (Pub. L. 103–62, Sec. 1116) and guidance provided by OMB Circular A–11, NRCS has established performance measures for its conservation programs. Program-funded conservation activity is captured through automated field-level business tools and the information is made publicly available at: *http://ias.sc.egov.usda.gov/PRSHOME/*. Program performance also is reported annually to Congress and the public through the annual performance budget, annual accomplishments report and the USDA Performance Accountability Report. Related performance

measurement and reporting policies are set forth in Agency guidance (GM_340_401 and GM_340_403) (*http://directives.sc.egov.usda.gov/*). The conservation actions undertaken by participants are the basis for measuring program performance-specific actions are tracked and reported annually, while the effects of those actions relate to whether the long-term benefits of the program are being achieved. The program requirements applicable to participants that relate to undertaking conservation actions are set forth in these regulations in § 1467.4, ''Program Requirements,'' § 1467.10, ''Cost-Share payments,'' and § 1467.11 ''Easement and 30-year contract participation requirements.'' These sections make clear participant obligations for implementing, operating, and maintaining WRP-funded conservation improvements, which in aggregate result in the program performance that is reflected in Agency performance reports.

Demonstrate whether long-term conservation benefits of the program are being achieved. Demonstrating the long-term natural resource benefits achieved through conservation programs is subject to the availability of needed data, the capacity and capability of modeling approaches, and the external influences that affect actual natural resource condition. While NRCS captures many measures of ''output'' data, such as acres of conservation practices, it is still in the process of developing methods to quantify the contribution of those outputs to environmental outcomes.

NRCS currently uses a mix of approaches to evaluate whether long-term conservation benefits are being achieved through its programs. Since 1982, NRCS has reported on certain natural resource status and trends through the National Resources Inventory (NRI), which provides statistically reliable, nationally consistent land cover/use and related natural resource data. However, lacking has been a connection between these data and specific conservation programs. In the future, the interagency Conservation Effects Assessment Project (CEAP), which has been underway since 2003, will provide nationally consistent estimates of environmental effects resulting from conservation practices and systems applied. CEAP results will be used in conjunction with performance data gathered through Agency field-level business tools to help produce estimates of environmental effects accomplished through Agency programs, such as WRP. In 2006 a Blue Ribbon panel evaluation of CEAP strongly endorsed the project's purpose, but concluded ''CEAP must change direction'' to achieve its purposes. In response, CEAP has focused on priorities identified by the Panel and clarified that its purpose is to quantify the effects of conservation practices applied on the landscape. Information regarding CEAP, including reviews and current status is available at *http://www.nrcs.usda.gov/technical/NRI/ceap/*. Since 2004 and the initial establishment of long-term performance measures by program, NRCS has been estimating and reporting progress toward long-term program goals. Natural resource inventory and assessment, and performance measurement and reporting policies set forth in Agency guidance (GM_290_400; GM_340_401; GM_340_403) (*http://directives.sc.egov.usda.gov/*).

Demonstrating the long-term conservation benefits of conservation programs is an Agency responsibility. Through CEAP, NRCS is in the process of evaluating how these long-term benefits can be achieved through the conservation practices and systems applied by participants under the program. The program requirements applicable to participants that relate to producing long-term conservation benefits are described previously under ''measuring program performance,'' *i.e.*, § 1467.4, ''Program Requirements,'' § 1467.10, ''Cost-Share payments,'' and § 1467.11 ''Easement and 30-year contract participation requirements.''

Track participation by crop and livestock type. NRCS' automated field-level business tools capture participant, land, and operation information. This information is aggregated in the National Conservation Planning database and is used in a variety of program reports. Additional reports will be developed to provide more detailed information on program participation to meet congressional needs. These and related program management procedures supporting program implementation are set forth in Agency guidance (440 CPM 519).

The program requirements applicable to participants that relate to tracking participation by crop and livestock type are put forth in these regulations in § 1467.4, ''Program Requirements,'' which makes clear program eligibility requirements, including the requirement to provide NRCS the information necessary to implement WRP.

Coordinate these actions with the national conservation program authorized under the Soil and Water Resources Conservation Act (RCA). The 2008 Act reauthorized and expanded on a number of elements of the RCA related to evaluating program performance and conservation benefits. Specifically, the 2008 Farm Bill added a provision stating,

''Appraisal and inventory of resources, assessment and inventory of conservation needs, evaluation of the effects of conservation practices, and analyses of alternative approaches to existing conservation programs are basic to effective soil, water, and related natural resources conservation.''

The program, performance, and natural resource and effects data described previously will serve as a foundation for the next RCA, which will also identify and fill, to the extent possible, data and information gaps. Policy and procedures related to the RCA are set forth in Agency guidance (GM_290_400; M_440_525; GM_130_402) (*http://directives.sc.egov.usda.gov/*).

The coordination of the previously described components with the RCA is an Agency responsibility and is not reflected in these regulations. However, it is likely that results from the RCA process will result in modifications to the program and performance data collected, to the systems used to acquire data and information, and potentially to the program itself. Thus, as the Secretary proceeds to implement the RCA in accordance with the statute, the approaches and processes developed will improve existing program performance measurement and outcome reporting capability and provide the foundation for improved implementation of the program performance requirements of Section 1244(g) of the 1985 Act.

List of Subjects in 7 CFR Part 1467

Administrative practice and procedure, Agriculture, Soil conservation, Wetlands, Wetland protection.

■ For the reasons stated in the preamble, the Commodity Credit Corporation revises Part 1467 of Title 7 of the Code of Federal Regulations to read as follows:

PART 1467—WETLANDS RESERVE PROGRAM

Sec.

1467.1 Applicability.
1467.2 Administration.
1467.3 Definitions.
1467.4 Program requirements.
1467.5 Application procedures.
1467.6 Establishing priority for enrollment of properties in WRP.
1467.7 Enrollment process.
1467.8 Compensation for easements and 30-year contracts.
1467.9 Wetlands Reserve Enhancement Program.

1467.10 Cost-share payments.
1467.11 Easement participation requirements.
1467.12 The WRPO development.
1467.13 Modifications.
1467.14 Transfer of land.
1467.15 Violations and remedies.
1467.16 Payments not subject to claims.
1467.17 Assignments.
1467.18 Appeals.
1467.19 Scheme and device.
1467.20 Market-based conservation initiatives.

Authority: 16 U.S.C. 3837 *et seq.*

§ 1467.1 Applicability.

(a) The regulations in this part set forth the policies, procedures, and requirements for the Wetlands Reserve Program (WRP) as administered by the Natural Resources Conservation Service (NRCS) for program implementation.

(b) The Chief, NRCS, may implement WRP in any of the 50 States, the District of Columbia, the Commonwealth of Puerto Rico, Guam, the Virgin Islands of the United States, American Samoa, and the Commonwealth of the Northern Mariana Islands.

§ 1467.2 Administration.

(a) The regulations in this part will be administered under the general supervision and direction of the Chief.

(b) The Chief is authorized to modify or waive a provision of this part if the Chief deems the application of that provision to a particular limited situation to be inappropriate and inconsistent with the environmental and cost-efficiency goals of the WRP. This authority cannot be further delegated. The Chief may not modify or waive any provision of this part that is required by applicable law.

(c) The State Conservationist will seek advice from the State Technical Committee on the development of the geographic area rate caps of compensation for an easement, a priority ranking process, and related policy matters.

(d) NRCS may delegate at any time easement management, monitoring, and enforcement responsibilities to other Federal or State agencies that have the appropriate authority, expertise, and technical and financial resources, as determined by NRCS to carry out such delegated responsibilities.

(e) NRCS may enter into cooperative agreements with Federal or State agencies, conservation districts, and private conservation organizations to assist NRCS with program implementation, including the provision of technical assistance.

(f) NRCS shall consult with the U.S. Department of the Interior's Fish and Wildlife Service (FWS) at the local level in determinations of land eligibility and as appropriate throughout the program implementation process. NRCS may consult Federal or State agencies, conservation districts, or other organizations in program administration. No determination by these agencies or organizations shall compel NRCS to take any action which NRCS determines will not serve the purposes of the program established by this part.

(g) The Chief may allocate funds for purposes related to: Encouraging enrollment by historically underserved producers as authorized by 16 U.S.C. 3844; special pilot programs for wetland management and monitoring; acquisition of wetland easements with emergency funding; cooperative agreements with other Federal or State agencies for program implementation; coordination of easement enrollment across State boundaries; coordination of the development of conservation plans; or, for other goals of the WRP found in this part. NRCS may designate areas as conservation priority areas where environmental concerns are especially pronounced and to assist landowners in meeting nonpoint source pollution requirements and other conservation needs.

§ 1467.3 Definitions.

The following definitions are applicable to this part:

30-year Contract means a contract that is for a duration of 30 years and is limited to acreage owned by Indian Tribes.

Acreage Owned by Indian Tribes means lands held in private ownership by an Indian Tribe or individual Tribal member and lands held in trust by a native corporation, Tribe or the Bureau of Indian Affairs (BIA).

Activity means an action other than a conservation practice that is included in the WRPO or restoration cost-share agreement, as applicable, and that has the effect of alleviating problems or improving treatment of the resources, including ensuring proper management or maintenance of the wetland functions and values restored, protected, or enhanced through an easement, contract, or restoration cost-share agreement.

Agreement means the document that specifies the obligations and rights of NRCS and any person or legal entity who is participating in the program.

Agricultural commodity means any agricultural commodity planted and produced in a State by annual tilling of the soil, including tilling by one-trip planters; or sugarcane planted and produced in a State.

Beginning Farmer or Rancher means an individual or legal entity who has not operated a farm or ranch, or who has operated a farm or ranch for not more than 10 consecutive years. This requirement applies to all members of a legal entity, and who will materially and substantially participate in the operation of the farm or ranch. In the case of an individual, individually or with the immediate family, material and substantial participation requires that the individual provide substantial day-to-day labor and management of the farm or ranch, consistent with the practices in the county or State where the farm is located. In the case of a legal entity or joint operation, material and substantial participation requires that each of the members provide some amount of the management, or labor and management necessary for day-to-day activities, such that if each of the members did not provide these inputs, operation of the farm or ranch would be seriously impaired.

Chief means the Chief of the Natural Resources Conservation Service or the person delegated authority to act for the Chief.

Commenced conversion wetland means a wetland or converted wetland for which the Farm Service Agency has determined that the wetland manipulation was contracted for, started, or for which financial obligation was incurred before December 23, 1985.

Conservation district means any district or unit of State or local government formed under State or territorial law for the express purpose of developing and carrying out a local soil and water conservation program. Such district or unit of government may be referred to as a ''conservation district,'' ''soil conservation district,'' ''soil and water conservation district,'' ''resource conservation district,'' ''natural resource district,'' ''land conservation committee,'' or a similar name.

Conservation practice means a specified treatment, such as a vegetative, structural, or land management practice, that is planned and applied according to NRCS standards and specifications.

Conservation Reserve Program (CRP) means the program administered by the Commodity Credit Corporation pursuant to 16 U.S.C. 3831–3836.

Contract means the legal document that specifies the obligations and rights of NRCS and any person or legal entity accepted to participate in the program. A WRP contract is an agreement for the transfer of assistance from NRCS to the participant for conducting the prescribed program implementation actions.

Converted wetland means a wetland that has been drained, dredged, filled, leveled, or otherwise manipulated (including any activity that results in impairing or reducing the flow, circulation, or reach of water) for the purpose, or to have the effect of, making the production of an agricultural commodity possible if such production would not have been possible but for such action; and before such action such land was wetland; and such land was neither highly erodible land nor highly erodible cropland.

Cost-share payment means the payment made by NRCS to a participant to carry out conservation practices and to achieve the protection of wetland functions and values, including necessary activities, as set forth in the Wetlands Reserve Plan of Operations (WRPO).

Easement means a reserved interest easement, which is an interest in land defined and delineated in a deed whereby the landowner conveys all rights, title, and interests in a property to the grantee, but the landowner retains those rights, title, and interests in the property which are specifically reserved to the landowner in the easement deed.

Easement area means the land encumbered by an easement.

Easement payment means the consideration paid to a landowner for an easement conveyed to the United States under the WRP, or the consideration paid to an Indian Tribe or tribal members for entering into 30-year contracts.

Easement Restoration Agreement means the agreement used to implement the Wetland Restoration Plan of Operations for projects enrolled through the permanent easement, 30-year easement, or 30-year contract enrollment options.

Farm Service Agency (FSA) is an agency of the United States Department of Agriculture.

Fish and Wildlife Service (FWS) is an agency of the United States Department of the Interior.

Historically Underserved Producer means a beginning, limited resource, or socially disadvantaged farmer or rancher.

Indian Tribe means any Indian tribe, band, nation, or other organized group or community, including any Alaska Native village or regional or village corporation as defined in or established pursuant to the Alaska Native Claims Settlement Act (85 Stat. 688, 43 U.S.C. 1601 *et seq.*), which is recognized as eligible for the special programs and services provided by the United States to Indians because of their status as Indians.

Landowner means a person or legal entity having legal ownership of eligible land. Landowner may include all forms of collective ownership including joint tenants, tenants in common, and life tenants. The term landowner includes trust holders of acreage owned by Indian Tribes.

Lands substantially altered by flooding means areas where flooding has created wetland hydrologic conditions which, with a high degree of certainty, will develop wetland soil and vegetation characteristics over time.

Legal entity means an entity that is created under Federal or State law and that owns land or an agricultural commodity; or produces an agricultural commodity.

Limited Resource Farmer or Rancher means a person with direct or indirect gross farm sales not more than $100,000 in each of the previous two years (to be increased to adjust for inflation using Prices Paid by Farmer Index as compiled by National Agricultural Statistical Service (NASS)), and who has a total household income at or below the national poverty level for a family of four, or less than 50 percent of county median household income in each of the previous two years (to be determined annually using U.S. Department of Commerce data).

Maintenance means work performed to keep the enrolled area functioning for program purposes for the duration of the enrollment period. Maintenance includes actions and work to manage, prevent deterioration, repair damage, or replace conservation practices on enrolled lands, as approved by NRCS.

Natural Resources Conservation Service (NRCS) is an agency of the United States Department of Agriculture, including when NRCS carries out program implementation using the funds, facilities, or authorities of the Commodity Credit Corporation (CCC).

Option agreement to purchase means the legal document that is the equivalent of a real estate option contract for purchasing land. The landowner signs the option agreement to purchase, which is authorization for NRCS to proceed with the easement acquisition process, and to incur costs for surveys, where applicable, title clearance and closing procedures on the easement. The option becomes a contract for sale and obligates CCC funding after it is executed by NRCS and transmitted to the landowner.

Participant means a person or legal entity who has been accepted into the program and who is receiving payment or who is responsible for implementing the terms and conditions of an option to purchase agreement, 30-year contract, or restoration cost-share agreement, and the associated WRPO.

Permanent easement means an easement that lasts in perpetuity.

Person means a natural person, a legal entity, or an Indian Tribe, but does not include governments or their political subdivisions.

Prairie Pothole Region means the counties designated as part of the Prairie Pothole National Priority Area for the Conservation Reserve Program (CRP) as of June 18, 2008.

Private land means land that is not owned by a governmental entity, and includes acreage owned by Indian Tribes, as defined in this Part.

Restoration Cost-Share Agreement means the legal document that describes the rights and obligations of participants who have been accepted to participate in WRP restoration cost-share enrollment option that is used to implement conservation practices and activities to protect, restore, or enhance wetlands values and functions to achieve the purposes of the program. The restoration cost-share agreement is an agreement between NRCS and the participant to share in the costs of implementing the Wetland Restoration Plan of Operations.

Riparian areas means areas of land that occur along streams, channels, rivers, and other water bodies. These areas are normally distinctly different from the surrounding lands because of unique soil and vegetation characteristics, may be identified by distinctive vegetative communities that are reflective of soil conditions normally wetter than adjacent soils, and generally provide a corridor for the movement of wildlife.

Socially disadvantaged farmer or rancher means a farmer or rancher who has been subjected to racial or ethnic prejudices because of their identity as a member of a group without regard to their individual qualities.

State Technical Committee means a committee established by the Secretary of the United States Department of Agriculture (USDA) in a State pursuant to 16 U.S.C. 3861.

Wetland means land that:

(1) Has a predominance of hydric soils;

(2) Is inundated or saturated by surface or groundwater at a frequency and duration sufficient to support a prevalence of hydrophytic vegetation typically adapted for life in saturated soil conditions; and

(3) Supports a prevalence of such vegetation under normal circumstances.

Wetland functions and values means the hydrological and biological

characteristics of wetlands and the socioeconomic value placed upon these characteristics, including:

(1) Habitat for migratory birds and other wildlife, in particular at risk species;

(2) Protection and improvement of water quality;

(3) Attenuation of water flows due to flood;

(4) The recharge of ground water;

(5) Protection and enhancement of open space and aesthetic quality;

(6) Protection of flora and fauna which contributes to the Nation's natural heritage; and

(7) Contribution to educational and scientific scholarship.

Wetland restoration means the rehabilitation of degraded or lost habitat in a manner such that:

(1) The original vegetation community and hydrology are, to the extent practical, re-established; or

(2) A community different from what likely existed prior to degradation of the site is established. The hydrology and native self-sustaining vegetation being established will substantially replace original habitat functions and values and does not involve more than 30 percent of the wetland restoration area.

Wetlands Reserve Plan of Operations (WRPO) means the conservation plan that identifies how the wetland functions and values will be restored, improved, and protected and which is approved by NRCS.

§ 1467.4 Program requirements.

(a) *General*. (1) Under the WRP, NRCS may purchase conservation easements from, or enter into 30-year contracts or restoration cost-share agreements with, eligible landowners who voluntarily cooperate to restore, protect, or enhance wetlands on eligible private and Tribal lands. The 30-year contract enrollment option is only available to acreage owned by Indian Tribes.

(2) To participate in WRP, a landowner must agree to the implementation of a WRPO, the effect of which is to restore, protect, enhance, maintain, and manage the hydrologic conditions of inundation or saturation of the soil, native vegetation, and natural topography of eligible lands. NRCS may provide cost-share assistance through a restoration cost-share agreement or an easement restoration agreement for the conservation practices and activities that promote the restoration, protection, enhancement, maintenance, and management of wetland functions and values. Specific restoration, protection, enhancement, maintenance, and management actions may be undertaken by the landowner, NRCS, or other designee.

(b) *Acreage limitations*. (1) Except for areas devoted to windbreaks or shelterbelts after November 28, 1990, no more than 25 percent of the total cropland in any county, as determined by the FSA, may be enrolled in the CRP and the WRP, and no more than 10 percent of the total cropland in the county may be subject to an easement acquired through the WRP.

(2) NRCS and FSA shall concur before a waiver of the 25 percent limit of this paragraph can be approved for an easement proposed for enrollment in the WRP. Such a waiver will only be approved if the waiver will not adversely affect the local economy, and operators in the county are having difficulties complying with the conservation plans implemented under 16 U.S.C. 3812.

(c) *Landowner eligibility*. To be eligible to enroll in the WRP, a person, legal entity, or Indian Tribe must be in compliance with the highly erodible land and wetland conservation provisions in 7 CFR part 12. Persons or legal entities must be in compliance with the Adjusted Gross Income Limitation provisions at Subpart G of 7 CFR part 1400, and:

(1) Be the landowner of eligible land for which enrollment is sought;

(2) For easement applications, have been the landowner of such land for the 7-year period prior to the time the land is determined eligible for enrollment unless it is determined by the State Conservationist that:

(i) The land was acquired by will or succession as a result of the death of the previous landowner;

(ii) The ownership change occurred due to foreclosure on the land and the owner of the land immediately before the foreclosure exercises a right of redemption from the mortgage holder in accordance with State law; or

(iii) The land was acquired under circumstances that give adequate assurances, as determined by NRCS, that such land was not acquired for the purposes of placing it in the program, such as demonstration of status as a beginning farmer or rancher.

(3) Agree to provide such information to NRCS as the agency deems necessary or desirable to assist in its determination of eligibility for program benefits and for other program implementation purposes.

(d) When a parcel of land that has been accepted for enrollment into the WRP is sold or transferred prior to the easement being perfected, the application or option agreement to purchase will be cancelled and acres will be removed from enrollment. If the new landowner wishes to continue enrollment, a new application must be filed so that all eligibility criteria may be examined and documented.

(e) *Land eligibility*. (1) Only private land or land owned by Indian Tribes may be considered for enrollment into WRP.

(2) NRCS shall determine whether land is eligible for enrollment and whether, once found eligible, the lands may be included in the program based on the likelihood of successful restoration of wetland functions and values when considering the cost of acquiring the easement and the cost of the restoration, protection, enhancement, maintenance, and management.

(3) Land shall only be considered eligible for enrollment in the WRP if NRCS determines, in consultation with the FWS, that:

(i) The enrollment of such land maximizes wildlife benefits and wetland values and functions;

(ii) Such land is—

(A) Farmed wetland or converted wetland, together with adjacent lands that are functionally dependent on the wetlands; or

(B) Cropland or grassland that was used for agricultural production prior to flooding from the natural overflow of a closed basin lake or pothole, together with the adjacent land, where practicable, that is functionally dependent on the cropland or grassland; and

(iii) The likelihood of the successful restoration of such land and the resultant wetland values merit inclusion of such land in the program, taking into consideration the cost of such restoration.

(4) Land may be considered farmed wetland or converted wetland under paragraph (3)(ii)(A) of this section if such land is identified by NRCS as:

(i) Wetlands farmed under natural conditions, farmed wetlands, prior converted cropland, commenced conversion wetlands, farmed wetland pastures, and lands substantially altered by flooding so as to develop wetland functions and values; or

(ii) Former or degraded wetlands that occur on lands that have been used or are currently being used for the production of food and fiber, including rangeland and forest production lands, where the hydrology has been significantly degraded or modified and will be substantially restored.

(5) Land under paragraph (e)(3)(ii)(B) of this section may be considered for enrollment into 30-year easements if it meets the criteria under paragraph (e)(3) of this section, it is located in the Prairie Pothole Region as defined under

§ 1467.3 of this part, and the size of the parcel offered for enrollment is a minimum of 20 contiguous acres. Such land meets the requirement of likelihood of successful restoration only if the soils are hydric and the depth of water is 6.5 feet or less at the time of enrollment.

(6) If land offered for enrollment is determined eligible under paragraph (e)(3) and (e)(5) of this section, then NRCS may also enroll land adjacent or contiguous to such eligible land together with the eligible land, if such land maximizes wildlife benefits and:

(i) Is farmed wetland and adjoining lands enrolled in CRP, with the highest wetland functions and values, and is likely to return to production after it leaves CRP;

(ii) Is a riparian area along streams or other waterways that links or, after restoring the riparian area, will link wetlands which are protected by an easement or other device or circumstance that achieves the same objectives as an easement; or

(iii) Land adjacent to the eligible land that would contribute significantly to wetland functions and values, such as buffer areas, wetland creations, non-cropped natural wetlands, and restored wetlands, but not more than the State Conservationist, in consultation with the State Technical Committee, determines is necessary for such contribution.

(7) To be enrolled in the program, eligible land must be configured in a size and with boundaries that allow for the efficient management of the area for program purposes and otherwise promote and enhance program objectives, as determined by NRCS.

(f) *Enrollment of CRP lands*. Land subject to an existing CRP contract may be enrolled in the WRP only if the land and landowner meet the requirements of this part, and the enrollment is requested by the landowner and agreed to by NRCS. To enroll in WRP, the CRP contract for the property must be terminated or otherwise modified subject to such terms and conditions as are mutually agreed upon by FSA and the landowner.

(g) *Ineligible land*. The following land is not eligible for enrollment in the WRP:

(1) Converted wetlands if the conversion was commenced after December 23, 1985;

(2) Land that contains timber stands established under a CRP contract or pastureland established to trees under a CRP contract;

(3) Lands owned by an agency of the United States, other than held in trust for Indian Tribes;

(4) Lands owned in fee title by a State, including an agency or a subdivision of a State, or a unit of local government;

(5) Land subject to an easement or deed restriction which, as determined by NRCS, provides similar restoration and protection of wetland functions and values as would be provided by enrollment in WRP; and

(6) Lands where implementation of restoration practices would be undermined due to on-site or off-site conditions, such as risk of hazardous substances either on-site or off-site, proposed or existing rights of way, either on-site or off-site, for infrastructure development, or adjacent land uses, such as airports, that would either impede complete restoration or prevent wetland functions and values from being fully restored.

§ 1467.5 Application procedures.

(a) *Application for participation*. To apply for enrollment, a landowner must submit an Application for Participation in the WRP.

(b) *Preliminary agency actions*. By filing an Application for Participation, the landowner consents to an NRCS representative entering upon the land for purposes of assessing the wetland functions and values, and for other activities, such as the development of the preliminary WRPO, that are necessary or desirable for NRCS to evaluate applications. The landowner is entitled to accompany an NRCS representative on any site visits.

(c) *Voluntary reduction in compensation*. In order to enhance the probability of enrollment in WRP, a landowner may voluntarily offer to accept a lesser payment than is being offered by NRCS.

§ 1467.6 Establishing priority for enrollment of properties in WRP.

(a) When evaluating easement, 30-year contract, or restoration cost-share agreement offers from landowners, the NRCS, with advice from the State Technical Committee, may consider:

(1) The conservation benefits of obtaining an easement, or other interest in the land;

(2) The cost effectiveness of each easement or other interest in eligible land, so as to maximize the environmental benefits per dollar expended;

(3) Whether the landowner or another person is offering to contribute financially to the cost of the easement or other interest in the land to leverage Federal funds;

(4) The extent to which the purposes of the easement program would be achieved on the land;

(5) The productivity of the land; and

(6) The on-farm and off-farm environmental threats if the land is used for the production of agricultural commodities.

(b) To the extent practicable, taking into consideration costs and future agricultural and food needs, NRCS shall give priority to:

(1) Obtaining permanent easements over shorter term easements; and

(2) Acquiring easements based on the value of the easement for protecting and enhancing habitat for migratory birds and other wildlife, in consultation with FWS.

(c) NRCS, in consultation with the State Technical Committee, may place higher priority on certain geographic regions of the State where restoration of wetlands may better achieve State and regional goals and objectives.

(d) Notwithstanding any limitation of this part, the State Conservationist may, at any time, exclude enrollment of otherwise eligible lands if the participation of the adjacent landowners is essential to the successful restoration of the wetlands and those adjacent landowners are unwilling or ineligible to participate. The State Conservationist may coordinate with other Federal, State, and nonprofit organizations to encourage the restoration of wetlands on adjacent ineligible lands, especially in priority geographic areas.

(e)(1) The Chief will conduct an assessment during fiscal year 2008 and each subsequent fiscal year for the purpose of determining the interest and allocations for the Prairie Pothole Region to enroll land determined eligible under § 1467.4(d)(5) of this part into 30-year easements. Annually, the Chief will provide specific instructions for the assessment in writing to the applicable State Conservationists.

(2) The Chief will make an adjustment to the allocation for an applicable State for a fiscal year, based on the results of the assessment conducted under paragraph (e)(1) of this section for the State during the previous fiscal year.

§ 1467.7 Enrollment process.

(a) *Tentative Selection*. Based on the priority ranking, NRCS will notify an affected landowner of tentative acceptance into the program.

(b) *Effect of notice of tentative selection*. The notice of tentative acceptance into the program does not bind NRCS or the United States to enroll the proposed project in WRP, nor does it bind the landowner to continue with enrollment in the program. The notice informs the landowner of NRCS' intent to continue the enrollment process on

their land unless otherwise notified by the landowner.

(c) *Acceptance and effect of offer of enrollment.*

(1) *Easement.* For applications requesting enrollment through an easement, an option agreement to purchase will be presented by NRCS to the landowner, which will describe the easement area; the easement compensation amount; the easement terms and conditions; the landowner's obligations if the land is sold before restoration to an ineligible landowner; and other terms and conditions for participation that may be required by NRCS as appropriate. The landowner accepts enrollment in the WRP by signing the option agreement to purchase. NRCS will continue with easement acquisition activities after the property has been enrolled.

(2) *Restoration cost-share agreement.* For applications requesting enrollment through the restoration cost-share agreement option, a restoration cost-share agreement shall be presented by NRCS to the landowner, which will describe the enrolled area, the agreement terms and conditions, and other terms and conditions for participation that may be required by NRCS as appropriate. The landowner accepts enrollment in the WRP by signing the restoration cost-share agreement. NRCS will proceed with implementation of the WRPO after the property has been enrolled.

(3) *30-year contract.* For applications requesting enrollment through the 30-year contract option, a 30-year contract shall be presented by NRCS to the landowner, which will describe the contract area, the contract terms and conditions, and other terms and conditions for participation that may be required by NRCS as appropriate. The landowner accepts enrollment in the WRP by signing the 30-year contract. NRCS will proceed with implementation of the WRPO after the property has been enrolled.

(d) *Withdrawal of offer of enrollment* Prior to execution of the easement deed by the United States and the landowner, NRCS may withdraw the land from enrollment at any time due to lack of availability of funds, inability to clear title, sale of the land, risk of hazardous substance contamination, or other reasons. The offer of enrollment to the landowner shall be void if not executed by the landowner within the time specified.

§ 1467.8 Compensation for easements and 30-year contracts.

(a) *Determination of easement payment rates.* (1) Compensation for an easement under this part shall be made in cash in such amount as is agreed to and specified in the option agreement to purchase or 30-year contract.

(2) Payments for non-permanent easements or 30-year contracts shall be not more than 75 percent of that which would have been paid for a permanent easement as determined by the methods listed in paragraph (a)(3) of this section.

(3) NRCS shall pay as compensation the lowest of the following:

(i) The fair market value of the land using the Uniform Standards for Professional Appraisal Practices, or based on an area-wide market analysis or survey;

(ii) The geographic area rate cap determined under paragraph (a)(4) of this section; or

(iii) The landowner offer.

(4) The State Conservationist, in consultation with the State Technical Committee, shall establish one or more geographic area rate caps within a state. The State Conservationist shall submit geographic area rate caps and supporting documentation to the Chief for approval. Each State Conservationist will determine the geographic area rate cap using the best information which is readily available in that State. Such information may include: Soil types, type(s) of crops capable of being grown, production history, location, real estate market values, and tax rates and assessments.

(b) *Acceptance of offered easement compensation.* (1) NRCS will not acquire any easement unless the landowner accepts the amount of the easement payment offered by NRCS. The easement payment may or may not equal the fair market value of the interests and rights to be conveyed by the landowner under the easement. By voluntarily participating in the program, a landowner waives any claim to additional compensation based on fair market value.

(2)(i) For easements or 30-year contracts valued at $500,000 or less, NRCS will provide compensation in up to 30 annual payments, as requested by the participant, as specified in the option agreement to purchase or 30-year contract between NRCS and the participant.

(ii) For easements or 30-year contracts valued at more than $500,000, the Secretary may provide compensation in at least 5, but not more than 30 annual payments. NRCS may provide compensation in a single payment for such easements or 30-year contracts when, as determined by the Chief, it would further the purposes of the program. The applicable payment schedule will be specified in the option agreement to purchase, warranty easement deed, or 30-year contract between NRCS and the participant.

(c) *Reimbursement of a landowner's expenses.* For completed easement conveyances, NRCS will reimburse participants for their fair and reasonable expenses, if any, incurred for legal boundary surveys and other related costs, as determined by NRCS. The State Conservationist, in consultation with the State Technical Committee, may establish maximum payments to reimburse participants for reasonable expenses, if incurred.

(d) *Tax implications of easement conveyances.* Subject to applicable regulations of the Internal Revenue Service, a participant may be eligible for a bargain sale tax deduction which is the difference between the fair market value of the easement conveyed to the United States and the easement payment made to the participant. NRCS disclaims any representations concerning the tax implications of any easement or cost-share transaction.

(e) *Per acre basis calculations.* If easement payments are calculated on a per acre basis, adjustment to stated easement payment will be made based on final determination of acreage.

§ 1467.9 Wetlands Reserve Enhancement Program.

(a) *Wetlands Reserve Enhancement Program (WREP).* (1) The purpose of WREP is to target and leverage resources to address high priority wetlands protection, restoration, and enhancement objectives through agreements with States (including a political subdivision or agency of a State), nongovernmental organizations, and Indian Tribes.

(2) Funding for WREP agreements will be announced in the **Federal Register**.

(i) The announcement will provide details on the priorities for funding, required level of partner matching funds, ranking criteria, level of available funding, and additional criteria as determined by the Chief.

(ii) The Chief will determine the funding level for WREP on an annual basis. Funds for WREP are derived from funds available for WRP.

(3) Proposals will be submitted to the State Conservationist of the State in which the majority of the project area resides.

(i) State Conservationists will evaluate proposals based on the ranking criteria established in the announcement and provide proposals recommended for funding to the Chief.

(ii) The Chief will evaluate proposals recommended for funding and make final funding selections, in accordance

with ranking factors identified in the announcement.

(4) Selected proposals and associated funding will be provided to the State Conservationist to enter into WREP agreements with the eligible partner to carry out the project.

(b) *Reserved Rights Pilot.* (1) The Chief shall carry out a reserved rights pilot subject to the requirements established in this part.

(2) Under the reserved rights pilot, a landowner may reserve grazing rights in the warranty easement deed or 30-year contract, if the State Conservationist determines that the reservation and use of the grazing rights:

(i) Is compatible with the land subject to the easement or 30-year contract; and

(ii) Is consistent with the long-term wetland protection and enhancement goals for which the easement or 30-year contract was established; and

(iii) Complies with a WRPO developed with NRCS.

(3) The State Conservationist will provide public notice of the availability of the reserved rights pilot and the reserved rights template deed or 30-year contract, approved by the Chief, to be used in the pilot.

(4) Compensation for easements or 30-year contracts entered into under the reserved rights pilot will be based on the method described in § 1467.8 with the following exceptions:

(i) Section 1467.8(a)(3)(i) is adjusted to reduce the fair market value of the land by an amount equal to the value of the retained grazing rights as determined by a Uniform Standards for Professional Appraisal Practices appraisal or a market survey; and

(ii) Section 1467.8(a)(3)(ii) is adjusted to reduce the geographic area rate cap determined as described in § 1467.8(a)(4) by an amount equal to the value of the retained grazing rights.

§ 1467.10 Cost-share payments.

(a) NRCS may share the cost with participants of implementing the WRPO on the enrolled land. The amount and terms and conditions of the cost-share assistance shall be subject to the following restrictions on the costs of establishing or installing conservation practices or activities specified in the WRPO:

(1) On enrolled land subject to a permanent easement, NRCS will offer to pay at least 75 percent but not more than 100 percent of such costs; and

(2) On enrolled land subject to a non-permanent easement, 30-year contract, or restoration cost-share agreement, NRCS will offer to pay at least 50 percent but not more than 75 percent of such costs.

(3) The total amount of payments that a person or legal entity may receive, directly or indirectly, for one or more restoration cost-share agreements, for any year, may not exceed $50,000.

(b) Cost-share payments may be made only upon a determination by NRCS that an eligible conservation practice or component of the conservation practice has been implemented in compliance with appropriate NRCS standards and specifications; or an eligible activity has been implemented in compliance with the appropriate requirements detailed in the WRPO. Identified conservation practices or activities may be implemented by the participant, NRCS, or other NRCS designee.

(c) Cost-share payments may be made for replacement of an eligible conservation practice, if NRCS determines that the practice is still needed and that the failure of the original conservation practice was due to reasons beyond the control of the participant.

(d) A participant may seek additional cost-share assistance from other public or private organizations as long as the conservation practices or activities funded are in compliance with this part. In no event shall the participant receive an amount that exceeds 100 percent of the total actual cost of the restoration.

(e)(1) If land subject to an easement or 30-year contract is sold, the participant with the contractual obligation with NRCS will be responsible for implementation of any remaining items identified in the WRPO, unless the new landowner is an eligible participant, agrees to a transfer of the WRPO, and the voluntary transfer is approved in advance by NRCS. Cost-share payments will be made to the new eligible landowner upon presentation of an assignment of rights or other evidence that title has passed, proof of eligibility, and the new owner completes implementation of the WRPO.

(2) If the new landowner is not eligible for participation in WRP, the participant with the contractual obligation with NRCS will be responsible for implementation of any remaining items identified in the WRPO unless the new landowner agrees to implement the WRPO without NRCS assistance. The new landowner will be responsible for the implementation of conservation practices or activities necessary for maintenance of the easement functions and values as determined by NRCS. The contract between NRCS and the participant with the contractual obligation with NRCS will specify that NRCS will seek a refund of easement or 30-year contract compensation and restoration payments from the participant with the contractual obligation with NRCS, unless the new landowner agrees to the transfer and completion of the WRPO with no NRCS assistance or a transfer of the restoration contract occurs as set forth above. In cases where payment recoupment occurs, the WRP easement remains in full force and effect.

(3) If land subject to a restoration cost-share agreement is sold prior to the completion of the restoration cost-share agreement and the new landowner is not eligible for participation in WRP or unwilling to complete implementation of the restoration cost-share agreement without NRCS assistance, the agreement will be cancelled, and the acres will be removed from enrollment. NRCS will seek refund of the restoration payments from the participant with the contractual obligation with NRCS.

(4) If land subject to a restoration cost-share agreement is sold prior to the expiration of the agreement and the new landowner is an eligible participant, the new landowner may agree to the transfer of the agreement and to completion of the agreement with NRCS assistance. If the new eligible landowner refuses to accept the transfer, the participant with the contractual obligation with NRCS must complete the implementation of the WRPO without NRCS assistance or the agreement will be cancelled and the acres removed from enrollment. NRCS will seek refund of the restoration payments from the participant with the contractual obligation with NRCS.

§ 1467.11 Easement and 30-year contract participation requirements.

(a) *Easement requirements.* (1) To enroll land in WRP through the permanent or non-permanent easement option, a landowner shall grant an easement to the United States. The easement shall require that the easement area be maintained in accordance with WRP goals and objectives for the duration of the term of the easement, including the restoration, protection, enhancement, maintenance, and management of wetland and other land functions and values.

(2) For the duration of its term, the easement shall require, at a minimum, that the participant, and the participant's heirs, successors and assigns, shall, consistent with the terms of this part, cooperate in the restoration, protection, enhancement, maintenance, and management of the land in accordance with the warranty easement deed and with the terms of the WRPO. In addition, the easement shall grant to the United States, through NRCS:

(i) A right of access to the easement area;

(ii) The right to permit compatible uses of the easement area, including such activities as hunting and fishing, managed timber harvest, or periodic haying or grazing, if such use is consistent with the long-term protection and enhancement of the wetland resources for which the easement was established;

(iii) All rights, title and interest in the easement area; and

(iv) The right to ensure restoration, protection, enhancement, maintenance, and management activities on the easement area.

(3) The participant shall convey title to the easement in a manner that is acceptable to NRCS. The participant shall warrant that the easement granted to the United States is superior to the rights of all others, except for exceptions to the title that are deemed acceptable by NRCS.

(4) The participant shall:

(i) Comply with the terms of the easement;

(ii) Comply with all terms and conditions of any associated contract or agreement;

(iii) Agree to the permanent retirement of any existing cropland base and allotment history for the easement area under any program administered by the Secretary, as determined by the FSA;

(iv) Agree to the long-term restoration, protection, enhancement, maintenance, and management of the easement in accordance with the terms of the easement and related agreements;

(v) Have the option to enter into an agreement with governmental or private organizations to assist in carrying out any participant responsibilities on the easement area; and

(vi) Agree that each person or legal entity that is subject to the easement shall be jointly and severally responsible for compliance with the easement and the provisions of this part and for any refunds or payment adjustment which may be required for violation of any terms or conditions of the easement or the provisions of this part.

(5) For all lands enrolled in the WRP, NRCS shall develop a WRPO. The WRPO and any subsequent revisions will be signed by the NRCS and the participant to acknowledge discussion and receipt of the WRPO.

(b) *30-year contract requirements.* (1) To enroll land in WRP through the 30-year contract option, a landowner shall enter into a contract with NRCS. The contract shall require that the enrolled area be maintained in accordance with WRP goals and objectives for the duration of the contract, including the restoration, protection, enhancement, maintenance, and management of wetland and other land functions and values.

(2) For the 30-year duration, the contract shall require, at a minimum, that the participant, and the participant's heirs, successors and assigns, shall, consistent with the terms of this part, cooperate in the restoration, protection, enhancement, maintenance, and management of the land in accordance with the contract and with the terms of the WRPO. In addition, the contract shall grant to NRCS:

(i) A right of access to the contract area;

(ii) The right to permit compatible uses of the contract area, including such activities as a traditional Tribal use of the land, hunting and fishing, managed timber harvest, or periodic haying or grazing, if such use is consistent with the long-term protection and enhancement of the wetland resources for which the contract was established; and

(iii) The right to ensure restoration, protection, enhancement, maintenance, and management activities on the enrolled area.

(3) The participant shall:

(i) Comply with the terms of the contract;

(ii) Comply with all terms and conditions of any associated agreement;

(iii) Agree to the long-term restoration, protection, enhancement, maintenance, and management of the enrolled area in accordance with the terms of the contract and related agreements;

(iv) Have the option to enter into an agreement with governmental or private organizations to assist in carrying out any participant responsibilities on the enrolled area;

(v) Agree that each person or legal entity that is subject to the contract shall be jointly and severally responsible for compliance with the contract and the provisions of this part and for any refunds or payment adjustment which may be required for violation of any terms or conditions of the contract or the provisions of this part.

(4) For all lands enrolled in the WRP, NRCS shall develop a WRPO. The WRPO and any subsequent revisions will be signed by the NRCS and the participant to acknowledge discussion and receipt of the WRPO.

§ 1467.12 The WRPO development.

(a) The development of the WRPO will be made through the local NRCS representative, in consultation with the State Technical Committee, with consideration of site-specific technical input from FWS and the Conservation District.

(b) The WRPO will specify the manner in which the enrolled land shall be restored, protected, enhanced, maintained, and managed to accomplish the goals of the program. The WRPO will be developed to ensure that cost-effective restoration and maximization of wildlife benefits and wetland functions and values will result. Specifically, the WRPO will consider and address, to the extent practicable, the on-site alternations and the off-site watershed conditions that adversely impact the hydrology and associated wildlife and wetland functions and values.

§ 1467.13 Modifications.

(a) *Easements.* (1) After an easement has been recorded, no modification will be made in the easement except by mutual agreement with the Chief and the participant. The Chief will consult with FWS and the Conservation District prior to making any modifications to easements.

(2) Approved modifications will be made only in an amended easement, which is duly prepared and recorded in conformity with standard real estate practices, including requirements for title approval, subordination of liens, and recordation.

(3) The Chief may approve modifications to facilitate the practical administration and management of the easement area or the program so long as the modification will not adversely affect the wetland functions and values for which the easement was acquired or when adverse impacts will be mitigated by enrollment and restoration of other lands that provide greater wetland functions and values at no additional cost to the government.

(4) Modifications must result in equal or greater environmental and economic values to the United States and address a compelling public need, as determined by the Chief.

(b) *WRPO.* Insofar as is consistent with the easement and applicable law, the State Conservationist may approve modifications to the WRPO that do not affect provisions of the easement in consultation with the participant and with consideration of site specific technical input from the FWS and the Conservation District. Any WRPO modification must meet WRP regulations and program objectives, comply with the definition of wetland restoration as defined in § 1467.3, must result in equal or greater wildlife benefits, wetland functions and values,

and ecological and economic values to the United States.

§ 1467.14 Transfer of land.

(a) *Offers voided.* Any transfer of the property prior to the enrollment of the easement, 30-year contract, or restoration cost-share agreement contract, including the landowner entering into a contract or purchase agreement to sell the land subject to offer, shall void the offer of enrollment.

(b) *Payments to landowners.* For easements with multiple annual payments, any remaining easement payments will be made to the original participant unless NRCS receives an assignment of proceeds.

(c) *Claims to payments.* With respect to any and all payments owed to participants, NRCS shall bear no responsibility for any full payments or partial distributions of funds between the original participant and the participant's successor. In the event of a dispute or claim on the distribution of cost-share payments, NRCS may withhold payments without the accrual of interest pending an agreement or adjudication on the rights to the funds.

§ 1467.15 Violations and remedies.

(a) *Easement violations.* (1) In the event of a violation of the easement, 30-year contract, or any restoration cost-share agreement involving the participant, the participant shall be given reasonable notice and an opportunity to voluntarily correct the violation within 30 days of the date of the notice, or such additional time as the State Conservationist determines is necessary to correct the violation at the landowner's expense.

(2) Notwithstanding paragraph (a)(1) of this section, NRCS reserves the right to enter upon the easement area at any time to remedy deficiencies or easement violations. Such entry may be made at the discretion of NRCS when such actions are deemed necessary to protect important wetland functions and values or other rights of the United States under the easement. The participant shall be liable for any costs incurred by the United States as a result of the participant's negligence or failure to comply with easement or contractual obligations.

(3) At any time there is a material breach of the easement covenants or any associated agreement, the easement shall remain in force and NRCS may withhold or require the refund of any easement and cost-share payments owed or paid to participants. Such withheld or refunded funds may be used to offset costs incurred by the United States in any remedial actions or retained as damages pursuant to court order or settlement agreement. This remedy is in addition to any and all legal or equitable remedies available to the United States under applicable Federal or State law.

(4) The United States shall be entitled to recover any and all administrative and legal costs, including attorney's fees or expenses, associated with any enforcement or remedial action.

(b) *30-year Contract and Restoration Cost-Share Agreement violations.* (1) If the NRCS determines that a participant is in violation of the terms of a 30-year contract, or restoration cost-share agreement, or documents incorporated by reference into the 30-year contract or restoration cost-share agreement, the participant shall be given reasonable notice and an opportunity to voluntarily correct the violation within 30 days of the date of the notice, or such additional time as the State Conservationist determines is necessary to correct the violation. If the violation continues, the State Conservationist may terminate the 30-year contract or restoration cost-share agreement.

(2) Notwithstanding the provisions of paragraph (b)(1) of this section, a restoration cost-share agreement or 30-year contract termination is effective immediately upon a determination by the State Conservationist that the participant has:

(i) Submitted false information;

(ii) Filed a false claim;

(iii) Engaged in any act for which a finding of ineligibility for payments is permitted under this part; or

(iv) Taken actions NRCS deems to be sufficiently purposeful or negligent to warrant a termination without delay.

(3) If NRCS terminates a restoration cost-share agreement or 30-year contract, the participant will forfeit all rights for future payments under the restoration cost-share agreement or 30-year contract, and must refund all or part, as determined by NRCS, of the payments received, plus interest.

§ 1467.16 Payments not subject to claims.

Any cost-share, contract, or easement payment or portion thereof due any person under this part shall be allowed without regard to any claim or lien in favor of any creditor, except agencies of the United States Government.

§ 1467.17 Assignments.

Any person entitled to any cash payment under this program may assign the right to receive such cash payments, in whole or in part.

§ 1467.18 Appeals.

(a) A person participating in the WRP may obtain a review of any administrative determination concerning eligibility for participation utilizing the administrative appeal regulations provided in 7 CFR part 614.

(b) Before a person may seek judicial review of any administrative action taken under this part, the person must exhaust all administrative appeal procedures set forth in paragraph (a) of this section, and for purposes of judicial review, no decision shall be a final Agency action except a decision of the Chief of the NRCS under these procedures.

(c) Any appraisals, market analysis, or supporting documentation that may be used by the NRCS in determining property value are considered confidential information, and shall only be disclosed as determined at the sole discretion of the NRCS in accordance with applicable law.

(d) Enforcement actions undertaken by the NRCS in furtherance of its federally held property rights are under the jurisdiction of the federal courts and not subject to review under administrative appeal regulations.

§ 1467.19 Scheme and device.

(a) If it is determined by the NRCS that a participant has employed a scheme or device to defeat the purposes of this part, any part of any program payment otherwise due or paid such participant during the applicable period may be withheld or be required to be refunded with interest thereon, as determined appropriate by NRCS.

(b) A scheme or device includes, but is not limited to, coercion, fraud, misrepresentation, depriving any other person of payments for cost-share practices, contracts, or easements for the purpose of obtaining a payment to which a person would otherwise not be entitled.

(c) A participant who succeeds to the responsibilities under this part shall report in writing to the NRCS any interest of any kind in enrolled land that is held by a predecessor or any lender. A failure of full disclosure will be considered a scheme or device under this section.

§ 1467.20 Market-based conservation initiatives.

(a) *Acceptance and use of contributions.* Section 1241(e) of the Food Security Act of 1985, as amended, (16 U.S.C. 3841(e)), allows the Chief to accept and use contributions of non-Federal funds to support the purposes of the program. These funds shall be available without further appropriation and until expended, to carry out the program.

(b) *Ecosystem Services Credits for Conservation Improvements.* (1) USDA recognizes that environmental benefits will be achieved by implementing conservation practices and activities funded through WRP, and that environmental credits may be gained as a result of implementing activities compatible with the purposes of a WRP easement, 30-year contract, or restoration cost-share agreement. NRCS asserts no direct or indirect interest in these credits. However, NRCS retains the authority to ensure that the requirements of the WRPO, contract, and easement deed are met. Where activities required under an environmental credit agreement may affect land covered under a WRP easement, 30-year contract, or restoration cost-share agreement, participants are highly encouraged to request a compatibility assessment from NRCS prior to entering into such agreements.

(2) Section 1222(f)(2) of the Food Security Act of 1985 as amended, does not allow wetlands restored with Federal funds to be utilized for Food Security Act wetland mitigation purposes.

Signed this 9th day of January 2009, in Washington, DC.

Arlen L. Lancaster,

Vice President, Commodity Credit Corporation and Chief, Natural Resources Conservation Service.

[FR Doc. E9–735 Filed 1–14–09; 8:45 am]

BILLING CODE 3410–16–P

DEPARTMENT OF JUSTICE

Executive Office for Immigration Review

8 CFR Part 1274a

[EOIR No. 166I; AG Order No. 3031–2009]

RIN 1125–AA64

Reorganization of Regulations on Control of Employment of Aliens

AGENCY: Executive Office for Immigration Review, Department of Justice.

ACTION: Interim rule with request for comments.

SUMMARY: The Homeland Security Act of 2002, as amended, transferred the functions of the former Immigration and Naturalization Service (INS) from the Department of Justice to the Department of Homeland Security (DHS); however, it retained within the Department of Justice the functions of the Executive Office for Immigration Review (EOIR), a separate agency within the Department of Justice. Because the existing regulations often intermingled the responsibilities of the former INS and EOIR, this transfer required a reorganization of title 8 of the Code of Federal Regulations (CFR) in February 2003, including the establishment of a new chapter V in 8 CFR pertaining to EOIR. As part of this reorganization, a number of regulations pertaining to the responsibilities of DHS intentionally were duplicated in the new chapter V because of shared responsibilities. The Department of Justice now has determined that most of the duplicated regulations in part 1274a pertain to functions that are DHS's responsibility and do not need to be reproduced in EOIR's regulations in chapter V. This interim rule, therefore, deletes unnecessary regulations in part 1274a and makes appropriate reference to the applicable DHS regulations.

DATES: *Effective Date:* This rule is effective January 15, 2009.

Comments: Comments on this rule must be received by March 16, 2009.

ADDRESSES: Comments may be mailed to John N. Blum, Acting General Counsel, Executive Office for Immigration Review, 5107 Leesburg Pike, Suite 2600, Falls Church, Virginia 22041. To ensure proper handling, please reference EOIR Docket No. 166I on your correspondence. You may submit comments electronically or view an electronic version of this interim rule at *www.regulations.gov.*

FOR FURTHER INFORMATION CONTACT: John N. Blum, Acting General Counsel, Executive Office for Immigration Review, 5107 Leesburg Pike, Suite 2600, Falls Church, Virginia 22041, telephone (703) 305–0470.

SUPPLEMENTARY INFORMATION:

I. Posting of Public Comments

Please note that all comments received are considered part of the public record and made available for public inspection online at *http://www.regulations.gov.* Such information includes personal identifying information (such as your name, address, etc.) voluntarily submitted by the commenter.

If you want to submit personal identifying information (such as your name, address, etc.) as part of your comment, but do not want it to be posted online, you must include the phrase ''PERSONAL IDENTIFYING INFORMATION'' in the first paragraph of your comment. You also must locate all the personal identifying information you do not want posted online in the first paragraph of your comment and identify what information you want redacted.

If you want to submit confidential business information as part of your comment, but do not want it to be posted online, you must include the phrase ''CONFIDENTIAL BUSINESS INFORMATION'' in the first paragraph of your comment. You also must prominently identify confidential business information to be redacted within the comment. If a comment has so much confidential business information that it cannot be effectively redacted, all or part of that comment may not be posted on *http://www.regulations.gov.*

Personal identifying information and confidential business information identified and located as set forth above will be placed in the agency's public docket file, but not posted online. To inspect the agency's public docket file in person, you must make an appointment with agency counsel. Please see the ''For Further Information Contact'' paragraph below for agency counsel's contact information.

II. Background

The Homeland Security Act of 2002, as amended (HSA), transferred the functions of the former Immigration and Naturalization Service (INS or the Service) to the Department of Homeland Security (DHS). Public Law 107–296, tit. IV, subtits. D, E, F, 116 Stat. 2135, 2192 (Nov. 25, 2002), as amended. The HSA, however, retained the functions of the Executive Office for Immigration Review (EOIR) within the Department of Justice, under the direction of the Attorney General. 6 U.S.C. 521; 8 U.S.C. 1103(g); see generally Matter of D–J–, 23 I&N Dec. 572 (A.G. 2003).

EOIR was created by the Attorney General in 1983 to combine the functions performed by INS special inquiry officers (now immigration judges) and the Board of Immigration Appeals (Board) into a single administrative agency within the Department of Justice, separate from the former INS. 48 FR 8038 (Feb. 25, 1983). This administrative structure separated the administrative adjudication functions from the enforcement and service functions of the former INS, both for administrative efficiency and to foster independent judgment in adjudication. The Office of the Chief Administrative Hearing Officer (OCAHO) and its administrative law judges (ALJs) were added to EOIR in 1987, following enactment of section 274A of the Immigration and Nationality Act (INA), 8 U.S.C. 1324a. *See* 52 FR 44971 (Nov. 24, 1987).

Because both INS and EOIR were agencies within the Department of Justice at that time, the regulations affecting these agencies were included in the same chapter (chapter I). Most of the immigration regulations were organized by subject, which often resulted in provisions relating to the former INS and to EOIR being intermingled in the same parts and sections.

III. Rationale

The enactment of the HSA and its transfer of functions of the former INS to DHS, however, required the creation of a new chapter for the regulations pertaining to EOIR, separate from the DHS regulations. Accordingly, the Attorney General published a rule transferring certain provisions that related to the jurisdiction and procedures of EOIR to a new chapter V of 8 CFR. 68 FR 9823 (Feb. 28, 2003). When the transfer of authority from the former INS to DHS took place in March 2003, the time available did not permit a thorough review of each of the provisions of the regulations where EOIR's and the former INS's responsibilities were intermingled in the same sections. As a result, the Department's rule duplicated in chapter V certain parts and sections of the regulations that related to the responsibilities of both the former INS and EOIR, respectively. The rule also made a number of technical amendments to chapters I and V to ensure that the authorities existing in the former INS and EOIR regulations prior to the transfer of functions to DHS remained in effect.

In particular, 8 CFR part 274a (Control of Employment of Aliens) contained definitional, substantive, and procedural material relevant to both the former INS and the Special Counsel for Immigration-Related Unfair Employment Practices of the Department's Civil Rights Division under 28 CFR 0.53, as well as the predicates to civil penalty proceedings before OCAHO. It was for this reason and out of an abundance of caution that, in 2003, the Attorney General duplicated the existing portions of part 274a, found in chapter I of the regulations, into a new part 1274a, located in chapter V.

The Department had intended to address over time the regulatory overlaps resulting from the 2003 rule by eliminating or substantially reducing any duplicative parts and sections that intermingled EOIR's and the former INS's authority. The expectation was that DHS would revise the regulations in chapter I of 8 CFR by eliminating provisions exclusively relating to the immigration judges', the Board's, and the OCAHO ALJs' respective authorities (since those provisions are properly codified in the regulations governing EOIR), and that the Department would revise the regulations pertaining to EOIR in chapter V by eliminating the duplicative provisions that did not relate exclusively to EOIR's authority.

Based on experience acquired since the transfer of the former INS's substantive immigration authority to DHS, it is apparent that most of the duplicative provisions in part 1274a pertain to matters that are the responsibility of DHS. Accordingly, there is no reason or need for those provisions of part 274a to be reproduced in a separate part 1274a.

Moreover, DHS has begun to implement substantive revisions to part 274a, making clear that the existing duplicative regulatory provisions in part 1274a are not only unnecessary but potentially confusing. Recently, after notice and public comment, DHS is revising 8 CFR 274a.1(l) with respect to an employer's response to receiving notices from the Social Security Administration (SSA) indicating that certain employees' social security numbers as reflected in the employer's records do not match SSA's records. Safe-Harbor Procedures for Employers Who Receive a No-Match Letter, 72 FR 45611 (Aug. 15, 2007) (final rule); 73 FR 15944 (Mar. 26, 2008) (supplemental proposed rule). These regulatory revisions are within DHS' statutory authority under sections 103 and 274A of the INA, and are properly codified in the DHS regulations in 8 CFR part 274a. However, because they do not relate directly to EOIR's authority, these changes would not be incorporated into the provisions of 8 CFR part 1274a.

In addition, the Secretary of Homeland Security and the Attorney General recently published final rules to implement inflation adjustments in the amounts of civil penalties to be imposed under section 274A of the INA. 73 FR 10130 (Feb. 26, 2008).

In order to remove unnecessary redundancies, and to avoid any possible confusion based on changes to part 274a that are not also codified in part 1274a, the Department is removing all but a few provisions in the current part 1274a. This rule also adds a new general provision to section 1274a.1, noting that the substantive and procedural regulations relating to the implementation of the employment verification provisions of section 274A of the INA are contained in 8 CFR part 274a, and that the procedures for hearings before an ALJ relating to civil penalties sought by DHS under section 274A are contained in 28 CFR part 68. This new provision also states that, to the extent they are relevant, the provisions of 8 CFR part 274a are applicable in any adjudicatory proceedings before EOIR.

The only provisions remaining in part 1274a, therefore, are those that may have a direct impact on the authority of the OCAHO ALJs:

- Section 1274a.9(e) and (f) relating to the time allowed for seeking an ALJ hearing to challenge a DHS civil penalty and the consequences for failure to request an ALJ hearing; and
- Section 1274a.10 relating to the penalties to be imposed by an ALJ in a case arising under section 274A of the INA.

This rule revises § 1274a.9(e) and (f) to replace references to the former INS or the Service with references to DHS. This rule also slightly revises the existing language of § 1274a.9(f) for clarity; that is, the rule now expressly states that respondents who fail to make a timely request for a hearing are not entitled to a hearing before an ALJ. The change to § 1274a.10 has already been implemented in the rules published on February 26, 2008.

IV. Effect

This action is not a substantive change and does not alter any interpretation of the provisions of the INA or affect the legal rights of any person. The existing regulations codified in 8 CFR part 274a are unaffected by this rule, and the removal of entirely duplicative provisions in part 1274a does not alter the legal status quo.

The substantive and procedural regulations in part 274a and in other parts of the immigration regulations are within the Secretary's authority to promulgate and revise, pursuant to section 103 of the INA, except to the extent that some remaining provisions of the DHS regulations deal directly with the authority of EOIR adjudicators (an overlap that DHS and the Department are working to eliminate as discussed above). As noted, regulatory provisions that go to the powers, procedures, and authority of the immigration judges, the Board, or the ALJs in EOIR are within the Attorney General's exclusive authority. For example, regulatory provisions granting or limiting EOIR's jurisdiction, authorizing EOIR adjudicators to exercise specific authorities, or directing EOIR adjudicators to act in a certain way are properly within the Attorney General's authority to promulgate, rather than DHS's. However, Congress has vested in DHS the authority to

promulgate regulations interpreting and applying the provisions of the INA—except insofar as the INA confers authority on the President, the Attorney General, or the Secretary of State—and has vested in the Attorney General the authority to issue binding interpretations on all questions of law pursuant to section 103(a)(1) of the INA.

The premise of this rule that the provisions of part 274a are properly applicable in adjudicatory proceedings before EOIR is not new. The Department previously has made clear that the Attorney General need not personally promulgate immigration regulations in order for those regulations to be applicable in proceedings before EOIR; Attorney General Ashcroft addressed similar issues at the time of the adoption of the rule to reform the Board's adjudicatory processes in 2002, 67 FR 54878 (Aug. 26, 2002). [1] As with any such regulation adopted by an administrative agency pursuant to delegated statutory authority, the substantive or ''legislative'' regulations adopted by DHS (or by the former INS) within the scope of its delegated authority under the INA are properly deemed to have the ''force and effect of law.'' Thus, the DHS legislative regulations are properly treated as part of the governing law, not merely as ''guidance'' or recommendations for EOIR adjudicators to consider.[2]

V. Conclusion

In summary, this interim rule deletes certain unnecessary duplicative provisions in part 1274a and revises the remaining provisions in a way that references applicable regulations in part 274a. The Department and DHS plan to review other duplicated provisions of the immigration regulations in the future to determine whether additional provisions in different parts of the regulations also should be deleted to simplify the Code of Federal Regulations.

Administrative Procedure Act

The Department of Justice finds that good cause exists for adopting this rule as an interim rule with provision for post-promulgation public comment under 5 U.S.C. 553 because this rule only makes technical amendments to the organization, procedures, and practices of the Department of Justice to improve the organization of the Department regulations and reflects the transfer of functions contemplated by the Homeland Security Act of 2002. Similarly, because this interim rule makes changes in internal delegations and procedures, and is a recodification of existing regulations, this interim rule is not subject to the effective date limitation of 5 U.S.C. 553(d).

Regulatory Flexibility Act

Because no notice of proposed rule-making is required for this rule under the Administrative Procedure Act (5 U.S.C. 553), the provisions of the Regulatory Flexibility Act (5 U.S.C. 601 et seq.) do not apply.

Paperwork Reduction Act

The provisions of the Paperwork Reduction Act of 1995, Public Law 104–13, 44 U.S.C. chapter 35, and its implementing regulations, 5 CFR part 1320, do not apply to this interim rule because there are no new or revised recordkeeping or reporting requirements.

Unfunded Mandates Reform Act of 1995

This rule will not result in the expenditure by state, local, and tribal governments, in the aggregate, or by the private sector, of $100 million or more in any one year, and it will not significantly or uniquely affect small governments. Therefore, no actions were deemed necessary under the provisions of the Unfunded Mandates Reform Act of 1995.

Small Business Regulatory Enforcement Fairness Act of 1996

This rule is not a major rule as defined by section 251 of the Small Business Regulatory Enforcement Fairness Act of 1996, 5 U.S.C. 804. This rule will not result in an annual effect on the economy of $100 million or more; a major increase in costs or prices; or significant adverse effects on competition, employment, investment, productivity, innovation, or on the ability of United States-based companies to compete with foreign-based companies in domestic and export markets.

Congressional Review Act

This action pertains to agency organization, procedures, and practices and does not substantially affect the rights or obligations of non-agency parties and, accordingly, is not a ''rule'' as that term is used by the Congressional Review Act (Subtitle E of the Small Business Regulatory Enforcement Fairness Act of 1996 (SBREFA)). Therefore, the reporting requirement of 5 U.S.C. 801 does not apply.

Executive Order 12866

This rule has been drafted and reviewed in accordance with Executive Order 12866, section 1(b), Principles of Regulation. The Department has determined that this rule is not a ''significant regulatory action'' under section 3(f) of Executive Order 12866, Regulatory Planning and Review and accordingly this rule has not been reviewed by the Office of Management and Budget (OMB).

Executive Order 13132

This rule will not have substantial direct effects on the States, on the

[1] *See* 67 FR at 54884 (citations omitted):

The immigration regulations, however, include not only those rules adopted personally by the Attorney General, but also substantive and procedural rules duly promulgated by the Commissioner of the Service, under an express delegation of rulemaking authority from Congress to the Attorney General and, in turn, from the Attorney General to the Commissioner. The Department fully recognizes and reiterates, of course, that the Board and the immigration judges are independent of the Service (although some court opinions contain language that appears to blur this key distinction). For this reason, the Attorney General, and not the Commissioner, has consistently promulgated the regulations that govern the organization, procedures, or powers of the Board and the immigration judges and the conduct of immigration proceedings. The authority delegated to the Commissioner to promulgate substantive or ''legislative'' rules does properly extend, however, to the interpretation of the general provisions of the Act. A regulation adopted pursuant to delegated statutory authority and pursuant to applicable rulemaking requirements under the Administrative Procedure Act has the ''force and effect of law'' as a substantive or legislative rule. * * * The language of this rule makes explicit what was implicit in the current version of § 3.1.

A fundamental premise of the immigration enforcement process must be that the substantive regulations codified in title 8 of the Code of Federal Regulations are binding in all administrative settings, and this specifically includes substantive regulations interpreting and applying the provisions of the Act. * * * [T]he respondents, the immigration judges, the Service, and the public at large should not be left to wonder whether the regulations interpreting and applying the substantive provisions of the Act will be binding in administrative proceedings under the Act.

Such regulations themselves, of course, are susceptible to interpretation and application of their regulatory language by the immigration judges and the Board. However, if a substantive rule clearly defines a statutory term, or reflects a legal interpretation of the statutory provisions, then the position set forth in the rule will govern both the actions of the Service and the adjudication of immigration proceedings before the immigration judges and the Board.

[2] To the extent that an EOIR adjudicator may believe that an applicable regulation may not be consistent with the statute, the decisions of the ALJs or the Chief Administrative Hearing Officer in cases arising under sections 274A and 274C of the INA are subject to review by the Attorney General, as are the decisions of the Board, see 28 CFR 68.55, 8 CFR 1003.1(h)(1), and the Attorney General can decide when and how to exercise his ultimate authority to determine all questions of law with respect to matters arising under the INA. *See, e.g., Matter of Ponce de Leon-Ruiz*, 21 I&N Dec. 154 (BIA 1996; A.G. 1997) (the Board adhered to the regulatory interpretation in its decision but referred the case to the Attorney General for review in light of the Board's concern that the regulatory provision was not consistent with the statutory language); section 103(a)(1) and (g)(1), 8 U.S.C. 1103(a)(1) and (g)(1).

relationship between the national government and the States, or on the distribution of power and responsibilities among the various levels of government. Therefore, in accordance with section 6 of Executive Order 13132, the Department of Justice has determined that this rule does not have sufficient federalism implications to warrant a federalism summary impact statement.

Executive Order 12988

This rule meets the applicable standards set forth in sections 3(a) and 3(b)(2) of Executive Order 12988, Civil Justice Reform.

List of Subjects in Part 1274a

Administrative practice and procedure, Immigration.

■ Accordingly, for the foregoing reasons, part 1274a of chapter V of title 8 of the Code of Federal Regulations is amended as follows:

PART 1274a—CONTROL OF EMPLOYMENT OF ALIENS

■ 1. The authority citation for part 1274a continues to read as follows:

Authority: 8 U.S.C. 1101, 1103, 1324a.

■ 2. Revise § 1274a.1 to read as follows:

§ 1274a.1 Employer requirements.

(a) *Applicable regulations.* The regulations of the Department of Homeland Security (DHS) relating to the implementation of the employment eligibility and verification provisions of section 274A of the Immigration and Nationality Act (Act) are contained in 8 CFR part 274a.

(b) *Adjudication of civil penalty proceedings.* The procedures for hearings before an administrative law judge relating to civil penalties sought by DHS under section 274A of the Act are contained in 28 CFR part 68. The regulations governing employment eligibility and verification in 8 CFR part 274a are applicable to hearings before an administrative law judge and, to the extent relevant, to cases before an immigration judge or the Board of Immigration Appeals.

§§ 1274a.2, 1274a.3, 1274a.4, 1274a.5, 1274a.6, 1274a.7 and 1274a.8 [Removed]

■ 3. Remove sections 1274a.2 through 1274a.8.

■ 4. Section 1274a.9 is amended by:

■ a. Removing and reserving paragraphs (a) through (d);

■ b. Amending paragraph (e) by removing the terms ''the INS'' and ''the Service'' and adding in their place the term ''DHS''; and by

■ c. Revising paragraph (f), to read as follows:

§ 1274a.9 Enforcement procedures.

* * * * *

(f) *Failure to file a request for a hearing.* If the respondent does not file a request for a hearing in writing within thirty days of the date of service of a Notice of Intent to Fine (thirty-five days if served by ordinary mail), the final order issued by DHS shall not be subject to a hearing before an administrative law judge under 28 CFR part 68.

Subpart B [Removed and reserved]

■ 5. Remove and reserve subpart B.

Dated: January 7, 2009.

Michael B. Mukasey,

Attorney General.

[FR Doc. E9–526 Filed 1–14–09; 8:45 am]

BILLING CODE 4410–30–P

FARM CREDIT ADMINISTRATION

12 CFR Part 622

RIN 3052–AC47

Rules of Practice and Procedure; Adjusting Civil Money Penalties for Inflation

AGENCY: Farm Credit Administration.

ACTION: Final rule.

SUMMARY: This regulation implements cost-of-living adjustments to civil money penalties (CMPs) that the Farm Credit Administration (FCA) may impose under the Farm Credit Act of 1971, as amended (Farm Credit Act), and under the National Flood Insurance Reform Act of 1994 (Reform Act). The Federal Civil Penalties Inflation Adjustment Act of 1990, as amended by the Debt Collection Improvement Act of 1996 (FCPIA Act), requires all Federal agencies with the authority to impose CMPs to evaluate those CMPs periodically to ensure that they continue to maintain their deterrent value.

DATES: *Effective Date:* The regulation will become effective on January 16, 2009.

FOR FURTHER INFORMATION CONTACT:

Michael T. Wilson, Policy Analyst, Office of Regulatory Policy, Farm Credit Administration, McLean, VA 22102–5090, (703) 883–4124, TTY (703) 883–4434,

or

Howard I. Rubin, Senior Counsel, Office of General Counsel, Farm Credit Administration, McLean, VA 22102–5090, (703) 883–4029, TTY (703) 883–4020.

SUPPLEMENTARY INFORMATION:

I. Objective

The objective of this regulation is to recalculate the CMP inflation adjustments consistent with the FCPIA Act.

II. Background

A. Federal Civil Penalties Inflation Adjustment Act of 1990, as Amended

The FCPIA Act requires every Federal agency with authority to issue CMPs to enact regulations that adjust its CMPs pursuant to the inflation adjustment formula in section 5(b) of the FCPIA Act.[1] Each Federal agency was required to issue these regulations by October 23, 1996, and adjust them when necessary at least once every 4 years thereafter. Section 6 of the amended FCPIA Act specifies that inflation-adjusted CMPs will apply only to violations that occur after the effective date of the adjustment. The inflation adjustment is based on the percentage increase in the Consumer Price Index (CPI).[2] Specifically, section 5(b) of the FCPIA Act defines the term ''cost-of-living adjustment'' as ''the percentage (if any) for each civil monetary penalty by which (1) the Consumer Price Index for the month of June of the calendar year preceding the adjustment, exceeds (2) the Consumer Price Index for the month of June of the calendar year in which the amount of such civil monetary penalty was last set or adjusted pursuant to law.'' Furthermore, the increase for each CMP that is adjusted for inflation must be rounded using a method prescribed by section 5(a) of the FCPIA Act.

B. CMPs Issued Under the Farm Credit Act

Section 5.32(a) of the Farm Credit Act provides that any FCS institution or any officer, director, employee, agent, or other person participating in the conduct of the affairs of an FCS institution who violates the terms of a final order issued under section 5.25 or 5.26 of the Farm Credit Act must pay up to $1,000 per day for each day during which such violation continues. Orders issued by FCA under section 5.25 or 5.26 of the Farm Credit Act include

[1] *See* 28 U.S.C. 2461 note. Section 3(2) of the amended FCPIA Act defines a CMP as any penalty, fine, or other sanction that: (1) Either is for a specific monetary amount as provided by Federal law or has a maximum amount provided for by Federal law; (2) is assessed or enforced by an agency pursuant to Federal law; and (3) is assessed or enforced pursuant to an administrative proceeding or a civil action in the Federal courts.

[2] The CPI is published by the Department of Labor, Bureau of Statistics, and is available at its Web site: *ftp://ftp.bls.gov/pub/special.requests/cpi/cpiai.txt.*

temporary and permanent cease-and-desist orders. In addition, section 5.32(h) provides that any directive issued under sections 4.3(b)(2), 4.3A(e), or 4.14A(i) of the Farm Credit Act ''shall be treated'' as a final order issued under section 5.25 for purposes of assessing a CMP. Section 5.32(a) also states that ''[a]ny such institution or person who violates any provision of the [Farm Credit] Act or any regulation issued under this Act shall forfeit and pay a civil penalty of not more that $500 per day for each day during which such violation continues.''

1. Mathematical Calculation

In general, the adjustment calculation is based on the percentage by which the CPI for June 2008 exceeds the CPI for June of the calendar year the CMP was last adjusted. The CMP for violation of the terms of a final order issued under section 5.25 or 5.26 of the Farm Credit Act was last adjusted in 1996. The CMP for a violation of the Farm Credit Act, or a regulation issued under the Farm Credit Act, was last adjusted in 2005. According to the Bureau of Labor Statistics, the CPI for June 1996 and June 2005 was 156.7 and 194.5, respectively. The CPI for June 2008 was 218.815, resulting in a percentage change of 39.64 percent from June 1996 and 12.50 percent from June 2005.

2. Penalty Amount Remains the Same in § 622.61(a)(1)

The maximum CMP in § 622.61(a) for a violation of a final order issued under section 5.25 or 5.26 of the Farm Credit Act is currently $1,100.[3]

Multiplying $1,100 by 39.64[4] percent results in an increase of $436.04. When that number is rounded as required by section 5(a) of the FCPIA Act, the inflation-adjusted maximum remains $1,100.

3. New Penalty Amount in § 622.61(a)(2)

The maximum CMP in existing § 622.61(a)(2) for a violation of the Farm Credit Act or regulations issued under the Farm Credit Act is $650. When multiplying the existing CMP amount by 12.50 percent, this results in an increase of $81.25. This increase is rounded to $100 as required by section 5(a) of the FCPIA Act, and the inflation-adjusted maximum increases to $750.

[3] *See* 70 FR 12583 (March 15, 2005).

[4] As a result of the mathematical calculation for the year 2005 and the required rounding application, the penalty amount remained the same and did not reset. Therefore, in accordance with the FCPIA Act, the calculation for the 2009 adjustment was determined by using the June 1996 CPI of 156.7 and the June 2008 CPI of 218.815 resulting in a percentage change of 39.64 percent.

C. CMPs Issued Under the Reform Act

The Flood Disaster Protection Act of 1973, as amended by the Reform Act, requires that FCA assess a CMP for a pattern or practice of committing certain specific actions in violation of the National Flood Insurance Program.[5] Under the Reform Act, which became law in 1994, these CMPs were not to exceed $350 for each violation, and the total amount of penalties assessed for certain violations of the program against any single regulated entity during any calendar year was not to exceed $100,000.[6]

1. Mathematical Calculation

The adjustment calculation for these CMPs is based on the percentage by which the CPI for June 2008 exceeds the CPI for June 2005, the calendar the CMPs were last adjusted. As stated above, the CPI for June 2005 was 194.5, and the CPI for June 2008 was 218.815, resulting in a percentage change of 12.50.

2. New Penalty Amounts in § 622.61(b)

Multiplying $385 by 12.50 percent yields a $48.13 increase. This amount is rounded downward to $0.00 under the FCPIA rounding formula. Accordingly, the CMP maximum for each violation will remain $385. Similarly, multiplying the $110,000 total cap by 12.50 percent yields a $13,750 increase. This increase is rounded to $10,000 under the FCPIA rounding formula, bringing the new cap to $120,000 in total penalties that may be assessed under the Reform Act against any single regulated entity during any calendar year.

III. Notice and Comment Not Required by Administrative Procedure Act

The FCPIA Act gives Federal agencies no discretion in the adjustment of CMPs for the rate of inflation. Further, these revisions are ministerial, technical, and noncontroversial. For these reasons, the FCA finds good cause to determine that public notice and an opportunity to comment are impracticable, unnecessary, and contrary to the public interest pursuant to the Administrative Procedure Act, 5 U.S.C. 553(b)(B), and adopts this rule in final form. For all of the foregoing reasons, the FCA also finds good cause to determine that this regulation should become effective immediately, pursuant to the Administrative Procedure Act, 5 U.S.C. 553(d).

[5] *See* 42 U.S.C. 4012a.

[6] 42 U.S.C. 4012a(f).

IV. Regulatory Flexibility Act

Pursuant to section 605(b) of the Regulatory Flexibility Act (5 U.S.C. 601 *et seq.*), the FCA hereby certifies that the final rule will not have a significant economic impact on a substantial number of small entities. Each of the banks in the System, considered together with its affiliated associations, has assets and annual income in excess of the amounts that would qualify them as small entities. Therefore, System institutions are not ''small entities'' as defined in the Regulatory Flexibility Act.

List of Subjects 12 CFR Part 622

Administrative practice and procedure, Crime, Investigations, Penalties.

■ For the reasons stated in the preamble, part 622 of chapter VI, title 12 of the Code of Federal Regulations is amended to read as follows:

PART 622—RULES OF PRACTICE AND PROCEDURE

■ 1. The authority citation for part 622 continues to read as follows:

Authority: Secs. 5.9, 5.10, 5.17, 5.25–5.37 of the Farm Credit Act (12 U.S.C. 2243, 2244, 2252, 2261–2273); 28 U.S.C. 2461 note; and 42 U.S.C. 4012a(f).

Subpart B—Rules and Procedures for Assessment and Collection of Civil Money Penalties

■ 2. Revise § 622.61 to read as follows:

§ 622.61 Adjustment of civil money penalties by the rate of inflation under the Federal Civil Penalties Inflation Adjustment Act of 1990, as amended.

(a) The maximum amount of each civil money penalty within FCA's jurisdiction is adjusted in accordance with the Federal Civil Penalties Inflation Adjustment Act of 1990, as amended (28 U.S.C. 2461 note), as follows:

(1) Amount of civil money penalty imposed under section 5.32 of the Act for violation of a final order issued under section 5.25 or 5.26 of the Act: The maximum daily amount is $1,100.

(2) Amount of civil money penalty for violation of the Act or regulations: The maximum daily amount is $550 for each violation that occurs before March 16, 2005, $650 for each violation that occurs on or after March 16, 2005, but before January 16, 2009, and $750 for each violation that occurs on or after January 16, 2009.

(b) The maximum civil money penalty amount assessed under 42 U.S.C. 4012a(f) is $350 for each violation that

occurs before March 16, 2005, with total penalties under such statute not to exceed $110,000 for any single institution during any calendar year. For violations that occur on or after March 16, 2005, but before January 16, 2009, the maximum civil money penalty is $385 for each violation, with total penalties under such statute not to exceed $110,000 for any single institution during any calendar year. For violations that occur on or after January 16, 2009, the maximum civil money penalty is $385 for each violation, with total penalties under such statute not to exceed $120,000 for any single institution during any calendar year.

Date: January 9, 2009.

Roland E. Smith,

Secretary, Farm Credit Administration Board.

[FR Doc. E9–656 Filed 1–14–09; 8:45 am]

BILLING CODE 6705–01–P

FEDERAL HOUSING FINANCE AGENCY

12 CFR Part 1202

RIN 2590–AA05

Freedom of Information Act

AGENCY: Federal Housing Finance Agency.

ACTION: Final rule.

SUMMARY: The Federal Housing Finance Agency (FHFA) issues this regulation hereby implementing the Freedom of Information Act (FOIA) (U.S.C. 552), establishing procedures for public disclosure of information required to be disclosed under the FOIA and procedures to protect from disclosure business confidential and trade secret information, as appropriate.

DATES: This final regulation is effective January 15, 2009. For additional information, see **SUPPLEMENTARY INFORMATION**.

ADDRESSES: The complete file for this rule is available for public inspection, by appointment, during normal business hours at the Federal Housing Finance Agency, 1700 G Street, NW., Washington, DC 20552.

FOR FURTHER INFORMATION CONTACT: Mark D. Laponsky, Deputy General Counsel, telephone (202) 414–3832, (not a toll free number), Federal Housing Finance Agency, Fourth Floor, 1700 G Street, NW., Washington, DC 20552. The telephone number for the Telecommunications Device for the Deaf is (800) 877–8339.

SUPPLEMENTARY INFORMATION:

I. Background

The Federal Housing Finance Regulatory Reform Act of 2008 (Act) (Pub. L. 110–289), established FHFA as an independent agency of the Federal Government to ensure that the Federal National Mortgage Association (Fannie Mae), the Federal Home Loan Mortgage Corporation (Freddie Mac) and the Federal Home Loan Banks (collectively, the Regulated Entities) are capitalized adequately and operate safely and soundly and in compliance with applicable laws, rules and regulations.

On October 10, 2008, the Federal Housing Finance Agency (FHFA) published a proposed rule implementing the Freedom of Information Act (FOIA) (U.S.C. 552) in the **Federal Register**, establishing procedures for public disclosure of information required to be disclosed under the FOIA and procedures to protect from disclosure business confidential and trade secret information, as appropriate. *See* 73 FR 60192, October 10, 2008. Interested persons were afforded an opportunity to participate in the rulemaking through submission of written comments on the proposed rule. The comment period closed on November 10, 2008. Though the FHFA received one comment during the 30-day comment period, a modification to the proposed regulation is not necessary. The FHFA's final regulations in this part are identical to those in the proposed rule. This final rule addresses electronically available documents, procedures for making requests, agency handling of requests, records not disclosed, fees, and public reading rooms as well as other related provisions.

II. Analysis of Comment Received and Final Rule

In response to the proposed rule, the FHFA received one comment from a Bank. The Bank suggested modifying section 1202.7 to shorten FHFA's response time from 20 working days for standard track requests to 10 working days, further stating, 10 days will best satisfy the twin objectives of providing needed information within a reasonable timeframe while allowing ample time to the FHFA to respond to routine requests.

Due consideration has been given to the comment received. The 20 working days period is a statutory maximum limit in 5 U.S.C. 552. The FHFA anticipates that many standard track requests will be processed within 10 working days. The full statutory period accounts for unforeseen complications that can arise during request review and analysis. Therefore, to provide for the efficient operation of the rule, the FHFA is not adopting the modification suggested by the commenter.

Regulatory Flexibility Act

The Regulatory Flexibility Act (5 U.S.C. 601 *et seq.*) requires that a regulation that has a significant economic impact on a substantial number of small entities, small businesses, or small organizations must include an initial regulatory flexibility analysis describing the regulation's impact on small entities. Such an analysis need not be undertaken if the agency has certified that the regulation does not have a significant economic impact on a substantial number of small entities 5 U.S.C. 605(b). The FHFA has considered the impact of the final regulations of this part under the Regulatory Flexibility Act and certifies they are not likely to have a significant economic impact on a substantial number of small business entities because the regulation is applicable only to the internal operations and legal obligations of the FHFA.

Paperwork Reduction Act

The final regulations in this part do not contain any information collection requirement that requires the approval of OMB under the Paperwork Reduction Act (44 U.S.C. 3501 *et seq.*).

List of Subjects in 12 CFR Part 1202

Appeals, Confidential commercial information, Disclosure, Exemptions, Fees, Final action, Freedom of Information Act, Judicial review, Records, Requests.

■ For the reasons stated in the preamble, the FHFA amends 12 CFR chapter XII by adding part 1202 to subchapter A.

PART 1202—FREEDOM OF INFORMATION ACT

Sec.

1202.1 Why did FHFA issue this part?
1202.2 What do the terms in this part mean?
1202.3 What information can I obtain through FOIA?
1202.4 What information is exempt from disclosure?
1202.5 How do I request information from FHFA under FOIA?
1202.6 What if my request does not have all the information FHFA requires?
1202.7 How will FHFA respond to my FOIA request?
1202.8 If the records I request contain confidential commercial information, what procedures will FHFA follow?
1202.9 How do I appeal a response denying my FOIA request?
1202.10 Will FHFA expedite my request or appeal?

1202.11 What will it cost to get the records I requested?
1202.12 Is there anything else I need to know about FOIA procedures?

Authority: Pub. L. 110–289, 122 Stat. 2654; 5 U.S.C. 301, 552; 12 U.S.C. 4526; E.O. 12600, 52 FR 23781, 3 CFR, 1987 Comp., p. 235; E.O. 13392, 70 FR 75373–75377, 3 CFR, 2006 Comp., p. 216–200.

§ 1202.1 Why did FHFA issue this part?

(a) The Freedom of Information Act (FOIA) (5 U.S.C. 552), is a federal law that requires the Federal Housing Finance Agency (FHFA) and other government agencies to disclose records to the public.

(b) This part explains the rules that FHFA follows when processing and responding to requests for records under the FOIA. It also explains what you must do to request records from FHFA under the FOIA. You should read this part together with the FOIA, which explains in more detail your rights and the records FHFA may release to you.

(c) If you want to request information about yourself under the Privacy Act (5 U.S.C. 552a), you should file your request using FHFA's Privacy Act regulations at part 1204 of this Title. If you file a FOIA request for information about yourself, FHFA will process it as a request under the separate Privacy Act rules.

(d) FHFA may make public information that it routinely publishes or discloses when performing its activities without following these procedures.

§ 1202.2 What do the terms in this part mean?

Some of the terms you need to understand while reading the regulations in this part are—

Appeals Officer or *FOIA Appeals Officer* means a person designated by the Director of the Federal Housing Finance Agency (FHFA) to process appeals of denials of requests for FHFA records under the FOIA.

Confidential commercial information means records provided to the government by a submitter that arguably contain material exempt from release under Exemption 4 of the Freedom of Information Act, 5 U.S.C. 552(b)(4), because disclosure could reasonably be expected to cause substantial competitive harm.

Days, unless stated as ''calendar days,'' are working days and do not include Saturdays, Sundays, and federal holidays. If the last day of any period prescribed herein falls on a Saturday, Sunday, or federal holiday, the last day of the period will be the next working day that is not a Saturday, Sunday, or federal holiday.

Direct costs means the expenses, including for contract services, incurred by FHFA in search time, or reviewing and duplicating records to respond to a request for information. In the case of a commercial use request, the term also means those expenditures FHFA actually incurs in reviewing records to respond to the request. Direct costs include the cost of the time of the employee performing the work, the cost of any computer searches, and the cost of operating duplication equipment. Direct costs do not include overhead expenses such as costs of space, and heating or lighting the facility in which the records are stored.

Employee, for the purposes of this part, means any person holding an appointment to a position of employment with FHFA or any person who formerly held such an appointment; any conservator appointed by FHFA; or any agent or independent contractor acting on behalf of FHFA, even though the appointment or contract has terminated.

FHFA means the Federal Housing Finance Agency and includes its predecessor agencies, the Office of Federal Housing Enterprise Oversight (OFHEO) and, the Federal Housing Finance Board (FHFB). FHFA is an agency responsible for the regulation or supervision of financial institutions.

FOIA Officer and *Chief FOIA Officer* are persons designated by the Director of FHFA to process and respond to requests for FHFA records under the FOIA. The mailing address for the FOIA Officer or the Chief FOIA Officer is FHFA, 1700 G Street, NW., Washington, DC 20552.

Readily reproducible means that the requested record or records exist in electronic format and can be downloaded or transferred intact to a computer disk, tape, or other electronic medium with equipment and software currently in use by FHFA.

Record means information or documentary material FHFA maintains in any form or format, including electronic, which FHFA—

(1) Created or received under federal law or in connection with the transaction of public business;

(2) Preserved or determined is appropriate for preservation as evidence of FHFA's operations or activities or because of the value of the information it contains; and

(3) Controls at the time it receives a request for disclosure.

Regulated entities means the Federal Home Loan Mortgage Corporation (''Freddie Mac''), the Federal National Mortgage Association (''Fannie Mae''), any Federal Home Loan Bank and/or any affiliate thereof that is subject to the regulatory authority of FHFA.

Requester means any person seeking access to FHFA records under the FOIA.

Search time means the amount of time spent by or on behalf of FHFA in attempting to locate records responsive to a request, manually, or by electronic means, including page-by-page or line-by-line identification of responsive material within a record or extraction of electronic information from electronic storage media.

Submitter means any person or entity providing confidential information to the government. The term submitter includes, but is not limited to corporations, state governments, and foreign governments.

Unusual circumstances means the need to—

(1) Search for and collect records from agencies, offices, facilities, or locations that are separate from the office processing the request;

(2) Search, review, and duplicate a voluminous amount of separate and distinct records in order to process a single request; or

(3) Consult with another agency or among two or more components of FHFA that have a substantial interest in the determination of a request.

§ 1202.3 What information can I obtain through FOIA?

(a) *General.* FHFA generally follows a policy prohibiting employees from releasing or disclosing confidential or otherwise non-public information that FHFA possesses, except as authorized by this part or by the Director of FHFA, when the disclosure is necessary for the performance of official duties

(b) *Records.* You may request that FHFA disclose to you its records on a subject of interest to you. The FOIA only requires the disclosure of records. It does not require FHFA to create compilations of information or to provide narrative responses to questions or queries. Some information is exempt from disclosure.

(c) *Reading Rooms.* FHFA maintains electronic and physical reading rooms.

(1) You may visit the physical reading room for FHFA and OFHEO records at 1700 G Street, NW., Fourth Floor, Washington, DC 20552, open to the public from 9 a.m. to 3 p.m. each business day. For an appointment, contact the FOIA Officer by calling 202–414–6425 or by e-mail at *foia@fhfa.gov* or *foia.office@ofheo.gov*.

(2) You may visit the physical reading room for FHFA and FHFB records and at 1675 Eye Street, NW., 4th Floor, Washington, DC 20006, open to the public from 9 a.m. to 3 p.m. each

business day. For an appointment, contact the FOIA Officer by calling 202–408–2505 or by e-mail at *foia@fhfa.gov* or *foia@fhfb.gov*.

(3) You can find FHFA's electronic reading rooms by visiting FHFA's Web site at *http://www.fhfa.gov* and linking to its predecessor agencies' Web sites: *http://www.ofheo.gov* (Office of Federal Housing Enterprise Oversight); and *http://www.fhfb.gov* (Federal Housing Finance Board).

(4) Each reading room has the following records created by FHFA or its predecessor agencies, after November 1, 1996, and current indices to all of the following records created by FHFA or its predecessor agencies before or after November 1, 1996—

(i) Final opinions or orders issued by FHFA, or its predecessor agencies in adjudication;

(ii) Statements of policy and interpretation that have been adopted by FHFA or its predecessor agencies that are not published in the **Federal Register**;

(iii) FHFA or its predecessor agencies administrative staff manuals and instructions to staff that affect a member of the public, and that are not exempt from disclosure under FOIA; and

(iv) Copies of all records released pursuant to this subpart that FHFA determines have become or are likely to become the subject of subsequent requests for substantially the same records.

§ 1202.4 What information is exempt from disclosure?

(a) *General.* Unless the Director of FHFA, his or her designee, any FHFA regulation, or a statute specifically authorizes disclosure, FHFA will not release records of matters that are—

(1) Specifically authorized under criteria established by an Executive order to be kept secret in the interest of national defense or foreign policy, and is in fact properly classified pursuant to such Executive order.

(2) Related solely to FHFA's internal personnel rules and practices.

(3) Specifically exempted from disclosure by statute (other than 5 U.S.C. 552b), provided that such statute—

(i) Requires that the matters be withheld from the public in such a manner as to leave no discretion on the issue, or

(ii) Establishes particular criteria for withholding or refers to particular types of matters to be withheld.

(4) Trade secrets and commercial or financial information obtained from a person and privileged or confidential.

(5) Contained in inter-agency or intra-agency memoranda or letters that would not be available by law to a private party in litigation with FHFA.

(6) Contained in personnel, medical or similar files (including financial files) the disclosure of which would constitute a clearly unwarranted invasion of personal privacy.

(7) Compiled for law enforcement purposes, but only to the extent that the production of such law enforcement records or information—

(i) Could reasonably be expected to interfere with enforcement proceedings;

(ii) Would deprive a person of a right to fair trial or an impartial adjudication;

(iii) Could reasonably be expected to constitute an unwarranted invasion of personal privacy;

(iv) Could reasonably be expected to disclose the identity of a confidential source, including a State, local, or foreign agency or authority or any private institution or an entity that is regulated and examined by FHFA that furnished information on a confidential basis, and, in the case of a record compiled by a criminal law enforcement authority in the course of a criminal investigation or by an agency conducting a lawful national security intelligence investigation, information furnished by a confidential source;

(v) Would disclose techniques and procedures for law enforcement investigations or prosecutions, or would disclose guidelines for law enforcement investigations or prosecutions if such disclosure could reasonably be expected to risk circumvention of the law; or

(vi) Could reasonably be expected to endanger the life or physical safety of any individual.

(8) Contained in or related to examination, operating, or condition reports that are prepared by, on behalf of, or for the use of an agency responsible for the regulation or supervision of financial institutions.

(9) Geological and geophysical information and data, including maps, concerning wells.

(b) *Discretion To Apply Exemptions.* Although records or parts of them may be exempt from disclosure, FHFA may elect under the circumstances of any particular request not to apply an exemption. This election does not generally waive the exemption and it does not have precedential effect. FHFA may still apply the exemption to any other records or portions of records, regardless of when the request is received.

(c) *Redacted Portion.* If a requested record contains exempt information and information that can be disclosed and the portions can reasonably be segregated from each other, the portion of the record that can be disclosed will be released to the requester after FHFA deletes the exempt portions. If it is technically feasible, FHFA will indicate the amount of the information deleted at the place in the record where the deletion is made and include a notation identifying the exemption that was applied, unless including that indication would harm an interest protected by an exemption.

(d) *Exempt and Redacted Material.* FHFA is not required to provide an itemized index correlating each withheld document (or redacted portion) with a specific exemption justification.

(e) *Disclosure to Congress.* This section does not allow FHFA to withhold any information from, or to prohibit the disclosure of any information to, the Congress or any congressional committee or subcommittee.

§ 1202.5 How do I request information from FHFA under FOIA?

(a) *Where To Send Your Request.* FOIA requests must be in writing. You may make a request for FHFA records by writing directly to the FOIA Office through electronic mail, regular mail, or fax. The electronic mail address is: *foia@fhfa.gov*. The regular mail address is: FOIA Officer, Federal Housing Finance Agency, 1700 G Street, NW., Washington, DC 20552. The fax number is: (202) 414–8917. You can help FHFA process your request by marking electronic mail, letter, or fax and the subject line, envelope, or fax cover sheet ''FOIA Request.'' You may find the FHFA's ''Freedom of Information Act Reference Guides,'' available electronically on the FHFA's Web site, *http://www.fhfa.gov*, helpful in making your request.

(b) *Provide Your Name and Address.* Your request must include your full name, your address and, if different, the address at which FHFA is to notify you about your request; a telephone number at which you can be reached during normal business hours, and an electronic mail address, if any.

(c) *Request Is Under FOIA.* Your request must have a statement identifying it as being made under FOIA.

(d) *Your FOIA Status.* If you are submitting your request as a ''commercial use'' requester, an ''educational institution'' requester, a ''non-commercial scientific institution'' requester, or a ''representative of the news media'' for the purposes of the fee provisions of FOIA, your request must include a statement specifically identifying your status.

(e) *Describing the Records You Request.* You must describe the records that you seek in enough detail to enable FHFA personnel to locate them with a reasonable amount of effort. Your request should include as much specific information as possible that you know about each record you request, such as the date, title or name, author, recipient, subject matter, and file designations or descriptions of the record.

(f) *How You Want the Records Produced to You.* Your request must tell FHFA whether you will inspect the records before duplication or want them duplicated and furnished without inspection.

(g) *Agreement To Pay Fees.* Your FOIA request is an agreement by you to pay all applicable fees charged under section 1202.11, up to $100.00, unless you seek a fee waiver. When making a request, you may specify a higher or lower amount you will pay without consultation. Your inability to pay a fee does not justify granting a fee waiver.

(h) *Valid Requests.* FHFA will only process valid requests. A valid request must meet all the requirements of this section.

§ 1202.6 What if my request does not have all the information FHFA requires?

If the FHFA determines that your request does not reasonably describe the records you seek, is overly broad, or otherwise lacks required information, we will inform you in writing to explain why your request is incomplete or insufficient and give you 30 calendar days to modify your request to meet all the requirements. The first request for additional information tolls the 20 days period for FHFA to respond to your request under § 1202.7.

(a) If you respond with an amended request, FHFA will process the amended request as a new request.

(b) If you do not respond or provide additional information within the time allowed, or if the additional information you provide is still incomplete or insufficient, FHFA will consider the request withdrawn.

(c) If the additional information you are required to provide concerns fees that may be incurred or an agreement to pay fees, FHFA may toll the 20 days response time under section 1202.7, as often as necessary to obtain the additional information.

§ 1202.7 How will FHFA respond to my FOIA request?

(a) *Authority to Grant or Deny Requests.* The FOIA Officer and the Chief FOIA Officer are authorized to grant or deny any request for FHFA records.

(b) *Multi-Track Request Processing.* FHFA uses a multi-track system to process FOIA requests. This means that FOIA requests are processed based on their complexity. When FHFA receives your request, it is assigned to a Standard Track or Complex Track. FHFA will notify you if your request is assigned to the Complex Track as described in paragraph (e) of this section for extensions of time.

(1) *Standard Track.* FHFA assigns FOIA requests that are routine and require little or no search time, review, or analysis to the Standard Track. We respond to these requests within 20 days after receipt, in the order in which they are received. If FHFA determines while processing your Standard Track request, that it is more appropriately a Complex Track request, we will reassign it to the Complex Track and notify you as described in paragraph (e) of this section for extensions of time.

(2) *Complex Track.* FHFA assigns requests that are not routine to the Complex Track. Complex Track requests are those to which FHFA determines that that response will be voluminous, involve two or more FHFA units, require consultation with other agencies or entities, require searches of archived documents; or when FHFA determines that the request seeks confidential commercial information as described in section 1202.8, or will require an unusually high level of effort to search for, review and or duplicate records, or will cause undue disruption to the day-to-day activities of FHFA regulating and supervising the regulated entities. FHFA will respond to Complex Track requests as soon as reasonably possible, regardless of the date of receipt.

(c) *Referrals to Other Agencies.* When FHFA receives a request seeking records that originated in another Federal Government agency, FHFA refers the request to the other agency for response. FHFA will notify you if your request is referred to another agency.

(d) *Responses to FOIA Requests.* FHFA will respond to your request by granting or denying it in full, or by granting and denying it in parts. FHFA's response will be in writing. In determining which records are responsive to your request, we ordinarily will include only records we possess as of the date the request.

(1) *Requests That FHFA Grants.* If FHFA grants your request in full, the response will include the requested records or details about how FHFA will provide them to you, and the amount of any fees charged.

(2) *Requests That FHFA Denies or Grants and Denies in Parts.* If FHFA denies your request in full or grants and denies separate parts of it, the response will be signed by the official responding. If we deny your request in whole or in part because a requested record does not exist or cannot be located, is not readily reproducible in the form or format you sought, is not subject to the FOIA, or is exempt from disclosure, the written response will include the requested records, if any, the amount of any fees charged, the reasons for any denial, and a notice and description of your right to file an administrative appeal under section 1202.9.

(e) *Format and Delivery of Disclosed Records.* If FHFA grants, in whole or in part, your request for disclosure of records under FOIA, we will make the records available to you in the form or format you requested, if it is readily reproducible in that form or format. We will send them to the address you provided by regular U.S. Mail or by electronic mail unless we agree with you on alternate arrangements, such as your agreement to pay express or expedited delivery service fees or to pick up records at our office.

(f) *Extensions of Time.* In unusual circumstances, FHFA may extend the time limit in paragraph (b) of this section for no more than ten (10) days and notify you of—

(1) The reason for the extension;

(2) The date on which the determination in accordance with paragraph (b) of this section is expected; and

(3) The opportunity to limit the scope of the request so that the FHFA may process it on the simple track, or arrange an alternative time period for processing the request or a modified request.

§ 1202.8 If the records I request contain confidential commercial information, what procedures will FHFA follow?

(a) *General.* FHFA will not disclose confidential commercial information in response to your FOIA request except as described in this section.

(b) *Designation of Confidential Commercial Information.* Submitters of commercial information should use good-faith efforts to designate, by appropriate markings, either at the time of submission or at a reasonable time thereafter, those portions of the information they deem to be protected under 5 U.S.C. 552(b)(4) and section 1202.4(a)(4). Any such designation expired ten (10) years after they were submitted to the Government, unless the submitter requests, and provides reasonable justification for, a designation period of longer duration.

(c) *Predisclosure Notification.* Except as provided in paragraph (e) of this

section, if your FOIA request encompasses confidential commercial information, FHFA will, prior to disclosure of the information and to the extent permitted by law, provide prompt written notice to a submitter that confidential commercial information was requested when—

(1) The submitter has in good faith designated the information as confidential commercial information protected from disclosure under 5 U.S.C. 552(b)(4) and section 1202.4(a)(4); or

(2) FHFA has reason to believe that the request seeks confidential commercial information, the disclosure of which may result in substantial competitive harm to the submitter.

(d) *Content of Predisclosure Notification*. When FHFA sends a predisclosure notification to a submitter, it will contain—

(1) A description of the exact nature of the confidential commercial information requested or copies of the records or portions thereof containing the confidential business information; and

(2) An opportunity to object to disclosure within ten (10) days by providing to FHFA a detailed written statement demonstrating all reasons the submitter opposes disclosure.

(e) *Exceptions to Predisclosure Notification*. FHFA is not required to send a predisclosure notification if—

(1) FHFA determines that information should not be disclosed;

(2) The information lawfully has been published or has been officially made available to the public;

(3) Disclosure of the information is required by law, other than the FOIA;

(4) The information requested is not designated by the submitter as confidential commercial information pursuant to this section; or

(5) The designation made by the submitter, under paragraph (b) of this section, appears obviously frivolous; except that, FHFA will provide the submitter with written notice of any final decision to disclose the designated confidential commercial information within a reasonable number of days prior to a specified disclosure date.

(f) *Submitter's Objection to Disclosure*. A submitter may object to disclosure within ten (10) days after date of the Predisclosure Notification, or such other time period that FHFA may allow, by delivering to FHFA a statement demonstrating all grounds on which it opposes disclosure, and all reasons supporting its contention that the information should not be disclosed. The submitter's objection must contain a certification by the submitter, or an officer or authorized representative of the submitter, that the grounds and reasons presented are true and correct to the best of the submitter's knowledge. The submitter's objection may itself be subject to disclosure under the FOIA.

(g) *Notice of Intent to Disclose Information*. FHFA will consider carefully all grounds and reasons provided by a submitter objecting to disclosure. If FHFA decides to disclose confidential commercial information over the objection of the submitter, it will provide to the submitter, at least ten (10) days before the date of disclosure, written notice containing—

(1) A statement of the reasons for not sustaining the submitter's objections to disclosure;

(2) A description of the confidential commercial information to be disclosed; and

(3) A specified disclosure date.

(h) *Notice to Requester*. FHFA will give a requester whose request encompasses confidential commercial information the following notices—

(1) At the time a Predisclosure Notification is provided to the submitter, written notice that the request encompasses confidential commercial information that may be exempt from disclosure under 5 U.S.C. 552(b)(4) and section 1202.4(a)(4) and that the submitter of the information has been given the opportunity to comment on the proposed disclosure of the information; and

(2) At the time a Notice of Intent to Disclose is provided to the submitter, a copy of the Notice of Intent to Disclose, at least days before the specified disclosure date.

(i) *Notice of FOIA Lawsuit*. FHFA will promptly notify the submitter whenever a requester files suit seeking to compel disclosure of the submitter's confidential commercial information.

§ 1202.9 How do I Appeal a Response Denying my FOIA Request?

(a) *Right of Appeal*. If FHFA denied your request in whole or in part, you may appeal the denial to: FOIA Appeals Officer, Federal Housing Finance Agency, 1700 G Street, NW., Washington DC 20552. If you use a mail, express, or courier delivery service to file your appeal, include a clear marking identifying it as a ''FOIA APPEAL.'' You may file your appeal electronically by sending it to: *foia@fhfa.gov* with ''FOIA Appeal'' in the subject line. You may file an appeal by facsimile addressed to the attention of the FOIA Appeals Officer at (202) 414–6504, clearly identifying on the cover sheet that it is a ''FOIA Appeal.''

(b) *Timing, Form, Content and Receipt of an Appeal*. Your appeal must be written and submitted within 30 calendar days after you received FHFA's response denying your request. Your appeal must include a copy of the initial request, a copy of the letter denying the request in whole or in part, and a statement of the circumstances, reasons, or arguments you believe support disclosure of the requested record. FHFA will not consider an improperly addressed appeal to have been received for the purposes of the 20 days time period of paragraph (d) of this section, until it is actually received by the Appeals Officer, or would have been received by the Appeals Officer if due diligence were exercised.

(c) *Extensions of Time To Appeal*. If you need more time to file your appeal, you may request an extension of time of no more than ten (10) days in which to file your appeal, but only if your request is made within the original 30 calendar days time period for filing the appeal. The FOIA Appeals Officer has discretion to grant extensions of time to file appeals.

(d) *Final Action on Appeal*. FHFA's determination on your appeal will be in writing, signed by the FOIA Appeals Officer, and mailed within 20 days after the appeal is received or by the last day of the last extension under paragraph (e) of this section. The determination of an appeal is the final action of FHFA on a FOIA request. A determination—

(1) Affirming in whole or in part the denial of a request and including a brief statement of the reason or reasons for affirmance, including each FOIA exemption relied on.

(2) Reversing the denial of a request in whole or in part, requiring the request to be processed promptly in accordance with the determination.

(3) Remanding a request to the FOIA Officer for re-processing, stating the time limits for responding to the remanded request.

(e) *Notice of Delayed Determinations on Appeal*. If FHFA cannot mail a determination on your appeal within the time limit, the Appeals Officer will continue to process the appeal and upon expiration of the time limit, will inform you the reason for the delay and the date on which a determination may be expected to be mailed. In this notice of delay, the FOIA Appeals Officer may request that you forebear seeking judicial review until a final determination of the appeal.

(f) *Judicial Review*. If the denial of your request for records is upheld in whole or in part, or if a determination on the appeal has not been mailed at the end of the 20 days period in paragraph

(d) of this section, or the last extension thereof, you my seek judicial review under 5 U.S.C. 552(a)(4).

§ 1202.10 Will FHFA expedite my request or appeal?

(a) *Applications for Expedited Processing*. You may apply for expedited processing of an initial request or of an appeal. Your application must be in writing. FHFA will grant expedited processing, and give the request or appeal priority if your application demonstrates a compelling need for expedited processing by showing—

(1) Circumstances in which the lack of expedited treatment could reasonably be expected to pose an imminent threat to the life or physical safety of an individual;

(2) An urgency to inform the public about an actual or alleged Federal government activity if you are a person primarily engaged in disseminating information;

(3) The loss of substantial due process or rights;

(4) A matter of widespread and exceptional media interest in which there exists possible questions about the government's integrity, affecting public confidence; or

(5) Humanitarian need.

(b) *Certification of Compelling Need*. Your application for expedited processing must include a statement certifying that the reasons you present to demonstrate a compelling need are true and correct to the best of your knowledge.

(c) *Determination on Application*. FHFA will notify you within ten (10) days of receipt of your application whether expedited processing has been granted. If your application is denied, you may appeal under section 1202.9.

§ 1202.11 What will it cost to get the records I requested?

(a) *Assessment of Fees, Generally*. FHFA will assess you for fees covering the direct costs of responding to your request and costs for duplicating records, except as otherwise provided in a statute with respect to the determination of fees that may be assessed for disclosure, search time, or review of particular records.

(b) *Assessment of Fees, Categories of Requesters*. The fees that FHFA may assess vary depending on the type of request or the type of requester you are—

(1) *Commercial Use*. If you request records for a commercial use, the fees that FHFA may assess are limited to FHFA's operating costs incurred in search time, and/or to review and duplicate records.

(2) *Educational Institution, Noncommercial Scientific Institution, Representative of the News Media*. If you are not requesting records for commercial use and you are an educational institution, a noncommercial scientific institution or a representative of the news media, the fees that FHFA may assess are limited to FHFA's costs incurred for duplication in excess of 100 pages, or an electronic equivalent of 100 pages.

(3) *Other*. If neither paragraph (b)(1) nor paragraph (b)(2) of this section applies, the fees FHFA may assess you are limited to the costs FHFA incurs in search time and review in excess of two hours and to duplicate in excess of 100 pages, or an electronic equivalent of 100 pages.

(c) *Fee Schedule*. FHFA will maintain a current schedule of fees on its Web site at: *http://www.fhfa.gov*.

(d) *Notice of Anticipated Fees in Excess of $100.00*. When FHFA determines or estimates that the fees chargeable to you will exceed $100.00, FHFA will notify you of the actual or estimated amount of fees you will incur, unless you earlier indicated your willingness to pay fees as high as those anticipated. When you are notified that the actual or estimated fees exceed $100.00, your FOIA request will not be considered received by FHFA until you agree to pay the anticipated total fee.

(e) *Advance Payment of Fees*. FHFA may request that you pay estimated fees or a deposit in advance of responding to your request. If FHFA requests advance payment or a deposit, your request will not be considered received by FHFA until the advance payment or deposit is received. FHFA will request advance payment or a deposit only if—

(1) The fees are likely to exceed $500.00. If it appears that the fees will exceed $500.00, FHFA will notify you of the likely cost and obtain satisfactory assurance of full payment if you have a history of prompt payment of FOIA fees to FHFA. If you do not have a history of payment, or if the estimate of fees exceeds $1,000.00, FHFA may require an advance payment of fees in an amount up to the full estimated charge that will be incurred; or

(2) You previously failed to pay a fee to FHFA in a timely fashion, *i.e.*, within 30 calendar days of the date of a billing. FHFA may require you to make advance payment of the full amount of the fees anticipated before processing a new request or finishing processing of a pending request. If you have an outstanding balance due from a prior request, FHFA may require you to pay the full amount owed plus any applicable interest, as provided in paragraph (f) of this section, or demonstrate that the fee owed has been paid, as well as payment of the full amount of anticipated fees before processing your request.

(f) *Interest*. FHFA may charge you interest on an unpaid bill starting on the 31st calendar day following the day on which the bill was sent. Once a fee payment has been received by FHFA, even if not processed, FHFA will stay the accrual of interest. Interest charges shall be assessed at the rate prescribed by 31 U.S.C. 3717 and shall accrue from the date of the billing.

(g) *FHFA Assistance To Reduce Costs*. If FHFA notifies you of estimated fees exceeding $100.00 or requests advance payment or a deposit, you will have an opportunity to consult with FHFA staff to modify or reformulate your request to meet your needs at a lower cost.

§ 1202.12 Is there anything else I need to know about FOIA procedures?

These FOIA regulations in this part do not and shall not be construed to create any right or to entitle any person, as of right, to any service or to the disclosure of any record to which such person is not entitled under FOIA. This part only provides procedures for requesting records under FOIA.

Dated: January 9, 2009.

James B. Lockhart III,

Director, Federal Housing Finance Agency.

[FR Doc. E9–808 Filed 1–14–09; 8:45 am]

BILLING CODE 8070–01–P

FEDERAL HOUSING FINANCE AGENCY

12 CFR Part 1250

DEPARTMENT OF HOUSING AND URBAN DEVELOPMENT

Office of Federal Housing Enterprise Oversight

12 CFR Part 1773

RIN 2590–AA09

Flood Insurance

AGENCIES: Federal Housing Finance Agency; Office of Federal Housing Enterprise Oversight.

ACTION: Final regulation.

SUMMARY: The Federal Housing Finance Agency (FHFA) is issuing a final regulation that codifies the authority and responsibility of FHFA to oversee and enforce the statutory requirements affecting the operations of the Federal National Mortgage Association and the Federal Home Loan Mortgage

Corporation under the Flood Disaster Protection Act of 1973, as amended, and to effect congressionally mandated adjustments to the civil money penalties applicable to violations of that law.

DATES: The final regulation is effective February 17, 2009.

FOR FURTHER INFORMATION CONTACT: Andra Grossman, Counsel, telephone (202) 343–1313 (not a toll-free number); Federal Housing Finance Agency, Fourth Floor, 1700 G Street, NW., Washington, DC 20552. The telephone number for the Telecommunications Device for the Deaf is (800) 877–8339.

SUPPLEMENTARY INFORMATION:

I. Proposed Rulemaking

The FHFA published a proposed Flood Insurance regulation for public comment in the **Federal Register**, 73 FR 60198 (October 10, 2008). No comments were received. Accordingly, the proposed regulation is adopted as a final regulation with technical changes as described below under Section II.C. Background, Adjustment of civil money penalties for inflation.

II. Background

A. Establishment of the Federal Housing Finance Agency

The Housing and Economic Recovery Act of 2008 (HERA), Public Law No. 110–289, 122 Stat. 2654, amended the Federal Housing Enterprises Financial Safety and Soundness Act of 1992 (12 U.S.C. 4501 *et seq.*) (Act) to establish FHFA as an independent agency of the Federal Government.[1] The FHFA was established to oversee the prudential operations of the Federal National Mortgage Association, the Federal Home Loan Mortgage Corporation (collectively, Enterprises), and the Federal Home Loan Banks (collectively, Regulated Entities) and to ensure that they operate in a safe and sound manner including being capitalized adequately; foster liquid, efficient, competitive and resilient national housing finance markets; comply with the Act and rules, regulation, guidelines and orders issued under the Act, and the respective authorizing statutes of the Regulated Entities; and carry out their missions through activities authorized and consistent with the Act and their authorizing statutes; and, that the activities and operations of the Regulated Entities are consistent with the public interest.

The Office of Federal Housing Enterprise Oversight (OFHEO) and the Federal Housing Finance Board (FHFB) will be abolished one year after enactment of the HERA. However, the Regulated Entities continue to operate under regulations promulgated by OFHEO and FHFB and such regulations are enforceable by the Director of FHFA until such regulations are modified, terminated, set aside, or superseded by the Director of FHFA.[2]

B. Flood Insurance Responsibilities

The National Flood Insurance Act of 1968[3] and the FDPA,[4] as amended by the National Flood Insurance Reform Act of 1994 (NFIRA),[5] together create a comprehensive National Flood Insurance Program that includes various provisions designed to ensure that structures built in flood plains are covered by statutory minimum amounts of flood insurance. The NFIRA has specific requirements explicitly applicable to the Enterprises.[6] It originally designated OFHEO as the Federal agency responsible for determining compliance of the Enterprises' flood insurance responsibilities and provided OFHEO with the authority to issue any regulations necessary to carry out the applicable provisions of NFIRA.[7] The NFIRA also authorized OFHEO to impose civil money penalties upon an Enterprise that fails to implement procedures reasonably designed to ensure that the loans it purchases comply with the mandatory flood insurance purchase requirements.[8]

Section 1161(e) of HERA amended section 102(f)(3)(A) of the FDPA (42 U.S.C. 4012a(f)(3)(a)), by replacing OFHEO with FHFA as the agency responsible for determining compliance of the Enterprises' flood insurance responsibilities. Thus, FHFA issues this regulation to codify the authority and responsibility of FHFA to oversee and enforce the statutory requirements affecting the operations of the Enterprises under the FDPA, and to effect congressionally mandated adjustments to the civil money penalties applicable to violations of that law. This final regulation, when effective, will supersede the OFHEO Flood Insurance regulation at 12 CFR part 1773.

The Enterprises have a key role in the implementation of the Federal government's flood insurance program, particularly with regard to lenders that are not subject to direct supervision by a Federal regulatory agency. The Enterprises use their seller/servicer guidelines and other quality control review procedures to ensure that lenders with whom they contract comply with the applicable flood insurance laws. More specifically, each Enterprise is required to implement procedures reasonably designed to ensure that any mortgage loan that is purchased and is secured by property located in a designated flood hazard area is covered for the term of the loan by flood insurance in an amount at least equal to the lesser of (1) the outstanding principal balance of the loan or (2) the maximum limit of coverage made available for that type of property.[9]

C. Adjustment of Civil Money Penalties for Inflation

The FDPA sets forth the procedures under which the Director of FHFA may impose civil money penalties against an Enterprise and the amounts of these civil money penalties.[10] This regulation adjusts the amounts of these civil money penalties in accordance with the requirements of the Federal Civil Penalties Inflation Adjustment Act of 1990, as amended by the Debt Collection Improvement Act of 1996 (Inflation Adjustment Act).[11] The increases in maximum civil money penalty amounts do not mandate the amount of any civil money penalty that FHFA may seek for a particular violation. FHFA continues to determine each civil money penalty on a case-by-case basis in light of the circumstances of the case.

The Inflation Adjustment Act requires Federal agencies that have authority to issue civil money penalties to issue regulations that adjust each civil money penalty that the agency has jurisdiction to administer. The purpose of these adjustments is to maintain the deterrent effect of civil money penalties and promote compliance with the law. The Inflation Adjustment Act requires agencies to make an initial adjustment of their civil money penalties upon the statute's enactment, and to make additional adjustments on an ongoing basis, at least once every four years following the initial adjustment.

[1] *See* Division A, titled the ''Federal Housing Finance Regulatory Reform Act of 2008,'' TITLE I, Section 1101 of HERA.

[2] *See* sections 1302 and 1312 of HERA.

[3] Codified at 42 U.S.C. 4001 *et seq.* and other scattered sections of 42 U.S.C.

[4] Codified at 42 U.S.C. 4002 *et seq.* and other scattered sections of 42 U.S.C.

[5] Title V of the Riegle Community Development and Regulatory Improvement Act of 1994, Public Law No. 103–325 (Sept. 23, 1994) (codified, as amended, at 42 U.S.C. 4001–4129, and other sections of the United States Code).

[6] 42 U.S.C. 4012a(b)(3).

[7] 42 U.S.C. 4001 note (Pub. L. 103–325, Title V, Section 583).

[8] 42 U.S.C. 4012a(f)(3).

[9] 42 U.S.C. 4012a(b)(3).

[10] 42 U.S.C. 4012a(f)(3).

[11] 28 U.S.C. 2461 note.

Under the Inflation Adjustment Act, the inflation adjustment for each applicable civil money penalty is determined by increasing the maximum civil money penalty amount by a cost-of-living adjustment. As is described in detail below, the Inflation Adjustment Act provides that this cost-of-living adjustment is to reflect the percentage increase in the Consumer Price Index for All Urban Consumers (CPI–U) since the civil money penalties were last adjusted or established.

The Inflation Adjustment Act directs Federal agencies to calculate each civil money penalty adjustment as the percentage by which the CPI–U for June of the calendar year preceding the adjustment exceeds the CPI–U for June of the calendar year in which the amount of such civil money penalty was last set or adjusted pursuant to law. When OFHEO issued the Flood Insurance regulation in 2001, the maximum civil money amounts of $350 (for each violation) and $100,000 (maximum annual amount for each Enterprise), found at 42 U.S.C. 4012a(f)(5), were adjusted to $385 and $110,000, respectively.[12]

OFHEO did not subsequently adjust these civil money penalty amounts. Because FHFA is making this adjustment in calendar year 2009, rather than in 2008 as indicated in the proposed regulation, the inflation amount for each civil money penalty is calculated by comparing the CPI–U for June 2001 (178.000), the calendar year OFHEO last adjusted the civil money penalty, with the CPI–U for June 2008 (218.815), rather than with the CPI–U for June 2007 (208.235). This results in an inflation adjustment of 22.93 percent in 2009, rather than an inflation adjustment of 17.05 percent if the Flood Insurance regulation had been published as final in 2008. For each civil money penalty, the product of this inflation adjustment and the previous maximum penalty amount is then rounded in accordance with the specific requirements of the Inflation Adjustment Act and added to the previous maximum penalty amount to determine the new adjusted penalty amount.[13] Accordingly, the civil money penalty maximum of $385 is increased to $485 for each violation, as was proposed. The civil money penalty maximum of $110,000 is increased to $140,000 in 2009, rather than increased to $130,000 as proposed, for the total assessed penalties against an Enterprise during any calendar year. The increase would apply only to violations which occur after the effective date of this regulation.

III. Section-by-Section Analysis

Section 1250.1 Purpose

This section sets forth the responsibilities of the Enterprises under the FDPA and the procedures to be used by FHFA in any proceeding to assess civil money penalties against an Enterprise under FDPA.

Section 1250.2 Procedural Requirements

Section 1250.2 sets forth the requirement that each Enterprise is to implement procedures reasonably designed to ensure that properties securing particular loans are properly insured in accordance with the National Flood Insurance Act of 1968, as amended. Consistent with 42 U.S.C. 4012a(4), it also sets forth that the procedures need apply only to loans made, increased, extended, or renewed after September 22, 1995. The section further provides that the procedural requirements do not apply to any loan having an original outstanding principal balance of $5,000 or less and a repayment term of one year or less.[14]

Section 1250.3 Civil Money Penalties

Section 1250.3 sets forth procedures under which the Director of FHFA may impose civil money penalties against an Enterprise. The Director may assess a civil money penalty against an Enterprise determined by the Director to have a pattern or practice of purchasing loans in violation of the procedures established pursuant to § 1250.2. The increase applies only to violations which occur after the date the increase takes effect.

The section also sets forth notice and hearing requirements prior to the imposition of civil money penalties. A civil money penalty may be issued only after notice and an opportunity for a hearing on the record has been provided.

In addition, the section sets forth the maximum amount of civil money penalties that may be imposed on an Enterprise under the regulation. A civil money penalty may not exceed the adjusted statutory amount of $485 for each violation and the total amount of penalties assessed against an Enterprise during any calendar year may not exceed the adjusted statutory cap of $140,000.

Furthermore, in accordance with 42 U.S.C. 4012a(f)(8), (9), and (10), § 1250.3 provides that—

(1) Any civil money penalties collected under this section are to be paid into the National Flood Mitigation Fund in accordance with 42 U.S.C. 4104d,

(2) Any civil money penalty is in addition to any civil remedy or criminal penalty otherwise available, and

(3) No penalty may be imposed after the expiration of the four-year period beginning on the date of the occurrence of the violation for which the penalty is authorized.

Regulatory Impact

Paperwork Reduction Act

This regulation does not contain any information collection requirement that requires the approval of OMB under the Paperwork Reduction Act (44 U.S.C. 3501 *et seq.*).

Regulatory Flexibility Act

The Regulatory Flexibility Act (5 U.S.C. 601 *et seq.*) requires that a regulation that has a significant economic impact on a substantial number of small entities, small businesses, or small organizations must include an initial regulatory flexibility analysis describing the regulation's impact on small entities. Such an analysis need not be undertaken if the agency has certified that the regulation will not have a significant economic impact on a substantial number of small entities. 5 U.S.C. 605(b). The FHFA has considered the impact of the regulation under the Regulatory Flexibility Act. The FHFA certifies that the regulation is not likely to have a significant economic impact on a substantial number of small business entities because the regulation is applicable only to the Enterprises, which are not small entities for purposes of the Regulatory Flexibility Act.

List of Subjects

12 CFR Part 1250

Government-sponsored enterprises, Flood insurance, Penalties, Reporting and recordkeeping requirements.

12 CFR Part 1773

Administrative practice and procedure, Flood insurance, Penalties, Reporting and recordkeeping requirements.

[12] 66 FR 65101 (Dec. 18, 2001); 12 CFR part 1773.

[13] The rounding rules of the Inflation Adjustment Act require that each increase be rounded to the nearest multiple as follows: $10 in the case of penalties less than or equal to $100; $100 in the case of penalties greater than $100 but less than or equal to $1,000; $1,000 in the case of penalties greater than $1,000 but less than or equal to $10,000; $5,000 in the case of penalties greater than $10,000 but less than or equal to $100,000; $10,000 in the case of penalties greater than $100,000 but less than or equal to $200,000; and $5,000 in the case of penalties greater than $200,000.

[14] 42 U.S.C. 4012a(c)(2).

Authority and Issuance

■ Accordingly, for the reasons stated in the preamble, under the authority of 12 U.S.C. 4526, the Federal Housing Finance Agency amends chapters XII and XVII of Title 12, Code of Federal Regulations, as follows:

CHAPTER XII—FEDERAL HOUSING FINANCE AGENCY

■ 1. Add Subchapter C, consisting of part 1250 to read as follows:

Subchapter C—Enterprises

PART 1250—FLOOD INSURANCE

Sec.
1250.1 Purpose.
1250.2 Procedural requirements.
1250.3 Civil money penalties.

Authority: 12 U.S.C. 4521(a)(4) and 4526; 28 U.S.C. 2461 note; 42 U.S.C. 4001 note; 42 U.S.C. 4012a(f)(3), (4), (5), (8), (9), and (10).

§ 1250.1 Purpose.

The purpose of this part is to set forth the responsibilities of the Federal National Mortgage Association and the Federal Home Loan Mortgage Corporation (collectively, Enterprises) under the Flood Disaster Protection Act of 1973 (FDPA), as amended (42 U.S.C. 4002 *et seq.*) and the procedures to be used by the Federal Housing Finance Agency (FHFA) in any proceeding to assess civil money penalties against an Enterprise.

§ 1250.2 Procedural requirements.

(a) *Procedures.* An Enterprise shall implement procedures reasonably designed to ensure for any loan that is secured by improved real estate or a mobile home located in an area that has been identified, at the time of the origination of the loan or at any time during the term of the loan, by the Director of the Federal Emergency Management Agency as an area having special flood hazards and in which flood insurance is available under the National Flood Insurance Act of 1968 (42 U.S.C. 4001 *et seq.*), as amended and purchased by the Enterprise, the building or mobile home and any personal property securing the loan is covered for the term of the loan by flood insurance in an amount at least equal to the lesser of the outstanding principal balance of the loan or the maximum limit of coverage made available with respect to the particular type of property under the National Flood Insurance Act of 1968, as amended.

(b) *Applicability.* (1) Paragraph (a) of this section shall apply only with respect to any loan made, increased, extended, or renewed after September 22, 1995.

(2) Paragraph (a) of this section shall not apply to any loan having an original outstanding balance of $5,000 or less and a repayment term of one year or less.

§ 1250.3 Civil money penalties.

(a) *In general.* If an Enterprise is determined by the Director of FHFA, or his or her designee, to have a pattern or practice of purchasing loans in violation of the procedures established pursuant to § 1250.2, the Director of FHFA, or his or her designee, may assess civil money penalties against such Enterprise in such amount or amounts as deemed to be appropriate under paragraph (c) of this section.

(b) *Notice and hearing.* A civil money penalty under this section may be assessed only after notice and an opportunity for a hearing on the record has been provided to the Enterprise.

(c) *Amount.* The maximum civil money penalty amount is $385 for each violation that occurs before the effective date of this part, with total penalties not to exceed $110,000. For violations that occur on or after the effective date of this part, the civil money penalty under this section may not exceed $485 for each violation, with total penalties assessed under this section against an Enterprise during any calendar year not to exceed $140,000.

(d) *Deposit of penalties.* Any penalties under this section shall be paid into the National Flood Mitigation Fund in accordance with section 1367 of the National Flood Insurance Act of 1968 (42 U.S.C. 4104d.), as amended.

(e) *Additional penalties.* Any penalty under this section shall be in addition to, and shall not preclude, any civil remedy, or criminal penalty otherwise available.

(f) *Statute of limitations.* No civil money penalty may be imposed under this section after the expiration of the four-year period beginning on the date of the occurrence of the violation for which the penalty is authorized under this section.

CHAPTER XVII—OFFICE OF FEDERAL HOUSING ENTERPRISE OVERSIGHT, DEPARTMENT OF HOUSING AND URBAN DEVELOPMENT

PART 1773—[REMOVED]

■ 2. Remove part 1773.

Dated: January 8, 2009.

James B. Lockhart III,

Director, Federal Housing Finance Agency.

[FR Doc. E9–809 Filed 1–14–09; 8:45 am]

BILLING CODE 8070–01–P

DEPARTMENT OF TRANSPORTATION

Federal Aviation Administration

14 CFR Part 71

[Docket No. FAA–2008–0982; Airspace Docket No. 08–ANM–6]

Modification of Class E Airspace; Alamosa, CO

AGENCY: Federal Aviation Administration (FAA), DOT.

ACTION: Final rule.

SUMMARY: This action will amend Class E airspace at Alamosa, CO. Additional controlled airspace is necessary to accommodate aircraft using a new Area Navigation (RNAV) Global Positioning System (GPS) Standard Instrument Approach Procedure (SIAP) at San Luis Valley Regional Airport/Bergman Field. This will improve the safety of Instrument Flight Rules (IFR) aircraft executing the new RNAV GPS SIAP at San Luis Valley Regional Airport/ Bergman Field, CO.

DATES: *Effective Date:* 0901 UTC, March 12, 2009. The Director of the Federal Register approves this incorporation by reference action under 1 CFR part 51, subject to the annual revision of FAA Order 7400.9 and publication of conforming amendments.

FOR FURTHER INFORMATION CONTACT: Eldon Taylor, Federal Aviation Administration, Operations Support Group, Western Service Area, 1601 Lind Avenue, SW., Renton, WA 98057; telephone (425) 203–4537.

SUPPLEMENTARY INFORMATION:

History

On October 28, 2008, the FAA published in the **Federal Register** a notice of proposed rulemaking to establish additional controlled airspace at Alamosa, CO, (73 FR 63912). Interested parties were invited to participate in this rulemaking effort by submitting written comments on the proposal to the FAA. No comments were received. With the exception of editorial changes, this rule is the same as that proposed in the NPRM.

Class E airspace designations are published in paragraph 6005 of FAA Order 7400.9S signed October 3, 2008, and effective October 31, 2008, which is incorporated by reference in 14 CFR part 71.1. The Class E airspace designations listed in this document will be published subsequently in that Order.

The Rule

This action amends Title 14 Code of Federal Regulations (14 CFR) part 71 by

amending the Class E airspace at Alamosa, CO. Additional controlled airspace is necessary to accommodate IFR aircraft executing a new RNAV (GPS) approach procedure at San Luis Valley Regional Airport/Bergman Field, Alamosa, CO.

The FAA has determined that this regulation only involves an established body of technical regulations for which frequent and routine amendments are necessary to keep them operationally current. Therefore, this regulation: (1) Is not a ''significant regulatory action'' under Executive Order 12866; (2) is not a ''significant rule'' under DOT Regulatory Policies and Procedures (44 FR 11034; February 26, 1979); and (3) does not warrant preparation of a regulatory evaluation as the anticipated impact is so minimal. Since this is a routine matter that will only affect air traffic procedures and air navigation, it is certified that this rule, when promulgated, will not have a significant economic impact on a substantial number of small entities under the criteria of the Regulatory Flexibility Act. The FAAs authority to issue rules regarding aviation safety is found in Title 49 of the U.S. Code. Subtitle 1, Section 106 discusses the authority of the FAA Administrator. Subtitle VII, Aviation Programs, describes in more detail the scope of the agency's authority. This rulemaking is promulgated under the authority described in Subtitle VII, Part A, Subpart I, Section 40103. Under that section, the FAA is charged with prescribing regulations to assign the use of airspace necessary to ensure the safety of aircraft and the efficient use of airspace. This regulation is within the scope of that authority as it establishes additional controlled airspace at San Luis Valley Regional Airport/Bergman Field, Alamosa, CO.

List of Subjects in 14 CFR Part 71

Airspace, Incorporation by reference, Navigation (air).

Adoption of the Amendment

■ In consideration of the foregoing, the Federal Aviation Administration amends 14 CFR part 71 as follows:

PART 71—DESIGNATION OF CLASS A, B, C, D, AND E AIRSPACE AREAS; AIR TRAFFIC SERVICE ROUTES; AND REPORTING POINTS

■ 1. The authority citation for 14 CFR part 71 continues to read as follows:

Authority: 49 U.S.C. 106(g), 40103, 40113, 40120; E.O. 10854, 24 FR 9565, 3 CFR, 1959–1963 Comp., p. 389.

§ 71.1 [Amended]

■ 2. The incorporation by reference in 14 CFR 71.1 of the Federal Aviation Administration Order 7400.9S, Airspace Designations and Reporting Points, signed October 3, 2008, and effective October 31, 2008 is amended as follows:

Paragraph 6005 Class E airspace areas extending upward from 700 feet or more above the surface of the earth.

* * * * *

ANM CO E5 Alamosa, CO [Modified]

San Luis Valley Regional Airport/Bergman Field, CO
(Lat. 37°26′06″ N., long. 105°52′00″ W.)
Alamosa VORTAC
(Lat. 37°20′57″ N., long. 105°48′56″ W.)

That airspace extending upward from 700 feet above the surface within 8.7 miles northeast and 10.5 miles southwest of the Alamosa VORTAC 335° and 155° radials extending from 20.1 miles northwest to 10.5 miles southeast of the VORTAC, and within 1.8 miles northwest and 5.3 miles southeast of the Alamosa VORTAC 200° radial extending from the VORTAC to 14 miles southwest of the VORTAC; that airspace extending upward from 1,200 feet above the surface within an area bounded by a point beginning at lat. 37°37′00″ N., long. 106°14′00″ W.; to lat. 37°44′00″ N., long. 105°55′00″ W.; to lat. 37°52′00″ N., long. 105°43′00″ W.; to lat. 37°49′00″ N., long. 105°31′00″ W.; to lat. 37°20′30″ N., long. 105°18′00″ W.; to lat. 37°03′30″ N., long. 105°18′00″ W.; to lat. 37°01′30″ N., long. 105°46′00″ W.; to lat. 36°48′00″ N., long. 105°48′00″ W.; to lat. 36°58′00″ N., long. 106°17′00″ W.; to lat. 37°09′00″ N., long. 106°19′00″ W.; to lat. 37°17′00″ N., long. 106°21′00″ W.; thence to the point of beginning.

* * * * *

Issued in Seattle, Washington, on December 29, 2008.

Harry S. Karnes,

Acting Manager, Operations Support Group, Western Service Center.

[FR Doc. E9–325 Filed 1–14–09; 8:45 am]

BILLING CODE 4910–13–P

DEPARTMENT OF TRANSPORTATION

Federal Aviation Administration

14 CFR Part 121

[Docket No. FAA–2008–1227; SFAR 106]

RIN 2120–AJ40

Use of Additional Portable Oxygen Concentrator Devices On Board Aircraft

AGENCY: Federal Aviation Administration (FAA), DOT.

ACTION: Final rule.

SUMMARY: This action amends Special Federal Aviation Regulation 106 (SFAR 106), Use of Certain Portable Oxygen Concentrator Devices On Board Aircraft, to allow for the use of the *Delphi Medical Systems' RS–00400* and *Invacare Corporation's XPO2* portable oxygen concentrator (POC) devices on board aircraft, provided certain conditions in the SFAR are met. SFAR 106 was previously amended to add three additional POC devices to the original SFAR. Today's action is necessary to allow all POC devices deemed acceptable by the FAA to be available for use in air commerce to the traveling public in need of oxygen therapy. With this Final Rule, there will be a total of seven different POC devices the FAA finds acceptable for use on board aircraft, and passengers will be able to carry these devices on board the aircraft and use them with the approval of the aircraft operator.

DATES: This final rule amending SFAR 106 will become effective on January 15, 2009.

FOR FURTHER INFORMATION CONTACT: David Catey, Air Transportation Division, Flight Standards Service, Federal Aviation Administration, 800 Independence Avenue, SW., Washington, DC 20591. Telephone: (202) 267–8166.

SUPPLEMENTARY INFORMATION:

Availability of Rulemaking Documents

You can get an electronic copy using the Internet by:

(1) Searching the Federal eRulemaking Portal at *http://www.regulations.gov*;

(2) Visiting the FAA's Regulations and Policies Web page at *http://www.faa.gov/regulations_policies/*; or

(3) Accessing the Government Printing Office's Web page at *http://www.gpoaccess.gov/fr/index.html.*

You can also get a copy by sending a request to the Federal Aviation Administration, Office of Rulemaking, ARM–1, 800 Independence Avenue, SW., Washington, DC 20591, or by calling (202) 267–9680. Make sure to identify the amendment number or docket number of this rulemaking.

Small Business Regulatory Enforcement Fairness Act

The Small Business Regulatory Enforcement Fairness Act (SBREFA) of 1996 requires FAA to comply with small entity requests for information or advice about compliance with statutes and regulations within its jurisdiction. Therefore, any small entity that has a question regarding this document may contact their local FAA official, or the person listed under **FOR FURTHER INFORMATION CONTACT**. You can find out

more about SBREFA on the Internet at our site, *http://www.faa.gov/regulations_policies/rulemaking/sbre_act/*.

Authority for This Rulemaking

The FAA's authority to issue rules regarding aviation safety is found in Title 49 of the United States Code (49 U.S.C.). Subtitle I, Section 106 describes the authority of the FAA Administrator. Subtitle VII, Aviation Programs, describes in more detail the scope of the agency's authority.

The FAA is authorized to issue this final rule pursuant to 49 U.S.C. 44701. Under that section, the FAA is authorized to establish regulations and minimum standards for other practices, methods, and procedures the Administrator finds necessary for air commerce and national security.

Background

On July 12, 2005, the FAA published Special Federal Aviation Regulation 106 (SFAR 106) entitled, ''Use of Certain Portable Oxygen Concentrator Devices On Board Aircraft'' (70 FR 40156). SFAR 106 is the result of a notice of proposed rulemaking (NPRM) the FAA published in July 2004 (69 FR 42324) to address the needs of passengers who must travel with medical oxygen. Prior to publication of SFAR 106, passengers in need of medical oxygen during air transportation faced many obstacles when requesting service. Many aircraft operators did not provide medical oxygen service aboard flights, and those that did often provided service at a price that travelers could not afford. Coordinating service between operators and suppliers at airports was also difficult, and passengers frequently chose not to fly because of these difficulties.

New medical oxygen technologies approved by the Food and Drug Administration (FDA) reduce the risks typically associated with compressed oxygen and provide a safe alternative for passengers who need oxygen therapy. Several manufacturers have developed small portable oxygen concentrator (POC) devices that work by separating oxygen from nitrogen and other gases contained in ambient air and dispensing it in concentrated form to the user with an oxygen concentration of about 90%. The POC devices operate using either rechargeable batteries or, if the aircraft operator obtains approval from the FAA, aircraft electrical power.

In addition, the Pipeline and Hazardous Materials Safety Administration (PHMSA) has determined that the POC devices covered by this amendment are not hazardous materials. Thus, they do not require the same level of special handling as compressed oxygen, and are safe for use on board aircraft, provided certain conditions for their use are met.

SFAR 106 permits passengers to carry on and use certain POC devices on board aircraft if the aircraft operator ensures that the conditions specified in the SFAR for their use are met. The devices initially determined acceptable for use in SFAR 106, published July 12, 2005, were the *AirSep Corporation's LifeStyle* and the *Inogen, Inc.'s Inogen One* POCs. SFAR 106 was amended on September 12, 2006 (71 FR 53954) to add three additional POC devices, *AirSep Corporation's FreeStyle, SeQual Technologies' Eclipse,* and *Repironics Inc.'s EverGo,* to the original SFAR. This final rule adds two additional POC devices, *Delphi Medical Systems' RS–00400* and *Invacare Corporation's XPO2,* that may be carried on and used by a passenger on board an aircraft.

Aircraft operators can now offer medical oxygen service as they did before SFAR 106 was enacted, or they can meet certain conditions and allow passengers to carry on and use one of the POC devices covered in SFAR 106. SFAR 106 is an enabling rule, which means that no aircraft operator is required to allow passengers to operate these POC devices on board its aircraft, but it may allow them to be operated on board. If the aircraft operator allows one of these devices to be carried on board, the conditions in the SFAR must be met.

When SFAR 106 was originally published, the FAA committed to establishing a single standard for all POC devices so that regulations would not apply to specific manufacturers and models of devices. Whenever possible, the FAA tries to regulate by creating performance-based standards rather than approving specific devices by manufacturer. In the case of SFAR 106, the quickest and easiest way to serve both the passenger and the aircraft operator was to allow the use of the devices determined to be acceptable by the FAA in SFAR 106 in a special, temporary regulation. As we stated in the preamble discussion of the final rule that established SFAR 106, ''while we are committed to developing a performance-based standard for all future POC devices, we do not want to prematurely develop standards that have the effect of stifling new technology of which we are unaware.'' We developed and published SFAR 106 so that passengers who otherwise could not fly could do so with an affordable alternative to what existed before SFAR 106 was published.

We continue to pursue the performance-based standard for all POC devices. This process is time-consuming and we intend to publish a notice in the **Federal Register** and offer the public a chance to comment on the proposal when it is complete. In the meantime, manufacturers continue to create new and better POC devices, and several have requested that their product also be included as an acceptable device in SFAR 106. These new manufacturers include Delphi Medical Systems and Invacare Corporation. Each of these companies has formally petitioned the FAA for inclusion in SFAR 106 by submitting documentation of the devices to the Federal Docket Management System. That documentation is available at *http://www.regulations.gov* under the following docket numbers:

1. Delphi Medical Systems—FAA–2008–0261; and
2. Invacare Corporation—FAA–2008–0278.

As stated in Section 2 of SFAR 106, no covered device may contain hazardous materials as determined by PHMSA (written documentation necessary), and each device must also be regulated by the FDA. Each petitioner included technical specifications for the devices in their request for approval, along with the required documentation from PHMSA and the FDA. The petitioners provided the FAA with the required documentation for the following POC devices:

1. Delphi Medical Systems', Model RS–00400; and
2. Invacare Corporation's, Model XPO2.

The Rule

This amendment to SFAR 106 will include the *Delphi Medical Systems' RS–00400* and *Invacare Corporation's XPO2* devices in the list of POC devices authorized for use in air commerce. The FAA has reviewed each individual device and accepted the documentation provided by the two manufacturers. That documentation includes letters provided to the manufacturer by PHMSA and the FDA affirming the status of each device as it pertains to the requisites stated in SFAR 106.

After reviewing the applicable FDA safety standards and the PHMSA findings, these two devices were determined by the FAA to be acceptable for use in air commerce.

Good Cause for Adoption of This Final Rule Without Notice and Comment

As stated above, SFAR 106 was published on July 12, 2005. We stated in the preamble of that final rule that

the *AirSep LifeStyle* and *Inogen One* POC devices were the only known acceptable devices when the rule was published. We also stated in that final rule that ''we cannot predict how future products may be developed and work.'' We initiated a notice and comment period for the use of POC devices on board aircraft on July 14, 2004 (69 FR 42324) and responded to the comments received in response to that NPRM in the final rule published in 2005. Therefore, it is unnecessary to publish a notice to request comments on this amendment because all issues related to the use of POC devices on board an aircraft have already been discussed. Further notice and comment would also delay the acceptance of the *Delphi Medical Systems' RS–00400* and *Invacare Corporation's XPO2* POC devices as authorized for use on board aircraft, which would delay their availability for passengers in need of oxygen therapy.

Therefore, I find that notice and public comment under 5 U.S.C. 553(b) is unnecessary and contrary to the public interest. Further, I find that good cause exists for making this rule effective immediately upon publication.

International Compatibility

In keeping with U.S. obligations under the Convention on International Civil Aviation, it is FAA policy to comply with International Civil Aviation Organization (ICAO) Standards and Recommended Practices to the maximum extent practicable. The FAA determined that there are no ICAO Standards and Recommended Practices that correspond to these regulations. I find that this action is fully consistent with my obligations under 49 U.S.C. 40105(b)(1)(A) to ensure that I exercise my duties consistently with the obligations of the United States under international agreements.

Paperwork Reduction Act

As required by the Paperwork Reduction Act of 1995 (44 U.S.C. 3507(d)), the FAA submitted a copy of the new information collection requirements in SFAR 106 to the Office of Management and Budget for its review. OMB approved the collection of this information and assigned OMB Control Number 2120–0702.

This final rule requires that if a passenger carries a POC device on board the aircraft with the intent to use it during the flight, he or she must inform the pilot in command of that flight. Additionally, the passenger who plans to use the device must provide a written statement signed by a licensed physician that verifies the passenger's ability to operate the device, respond to any alarms, the extent to which the passenger must use the POC (all or a portion of the flight), and prescribes the maximum oxygen flow rate.

Please note that an agency may not conduct or sponsor, and a person is not required to respond to, a collection of information unless it displays a currently valid OMB control number. The Paperwork Reduction Act paragraph in the final rule that established SFAR 106 still applies to this amendment. The availability of two new POC devices will likely increase the availability and options for a passenger in need of oxygen therapy, but the paperwork burden discussed in the original final rule is unchanged. Therefore, the OMB Control Number associated with this collection remains 2120–0702.

Regulatory Analyses

Executive Order 12866 and DOT Regulatory Policies and Procedures

Changes to Federal regulations must undergo several economic analyses. First, Executive Order 12866 directs that each Federal agency shall propose or adopt a regulation only upon a reasoned determination that the benefits of the intended regulation justify its costs. Second, the Regulatory Flexibility Act of 1980 (Pub. L. 96–354) requires agencies to analyze the economic impact of regulatory changes on small entities. Third, the Trade Agreements Act (Pub. L. 96–39) prohibits agencies from setting standards that create unnecessary obstacles to the foreign commerce of the United States. In developing U.S. standards, the Trade Agreements Act requires agencies to consider international standards and, where appropriate, that they be the basis of U.S. standards. Fourth, the Unfunded Mandates Reform Act of 1995 (Pub. L. 104–4) requires agencies to prepare a written assessment of the costs, benefits, and other effects of proposed or final rules that include a Federal mandate likely to result in the expenditure by State, local, or tribal governments, in the aggregate, or by the private sector, of $100 million or more annually (adjusted for inflation with base year of 1995). This portion of the preamble summarizes the FAA's analysis of the economic impacts of this final rule.

Department of Transportation Order DOT 2100.5 prescribes policies and procedures for simplification, analysis, and review of regulations. If the expected cost impact is so minimal that a proposed or final rule does not warrant a full evaluation, this order permits that a statement to that effect and the basis for it to be included in the preamble if a full regulatory evaluation of the cost and benefits is not prepared. Such a determination has been made for this final rule. The reasoning for this determination follows:

This action amends Special Federal Aviation Regulation 106 (SFAR 106), Use of Certain Portable Oxygen Concentrator Devices On Board Aircraft, to allow for the use of the *Delphi Medical Systems' RS–00400* and *Invacare Corporation's XPO2* portable oxygen concentrator (POC) devices on board aircraft, provided certain conditions in the SFAR are met. This action is necessary to allow additional POC devices deemed acceptable by the FAA to be available to the traveling public in need of oxygen therapy, for use in air commerce. When this rule becomes effective, there will be a total of seven different POC devices the FAA finds acceptable for use on board aircraft, and passengers will be able to carry these devices on board the aircraft and use them with the approval of the aircraft operator.

The FAA has determined that this final rule is not a ''significant regulatory action'' as defined in section 3(f) of Executive Order 12866, and is not ''significant'' as defined in DOT's Regulatory Policies and Procedures.

Regulatory Flexibility Determination

The Regulatory Flexibility Act of 1980 (Pub. L. 96–354) (RFA) establishes ''as a principle of regulatory issuance that agencies shall endeavor, consistent with the objectives of the rule and of applicable statutes, to fit regulatory and informational requirements to the scale of the businesses, organizations, and governmental jurisdictions subject to regulation. To achieve this principle, agencies are required to solicit and consider flexible regulatory proposals and to explain the rationale for their actions to assure that such proposals are given serious consideration.'' The RFA covers a wide-range of small entities, including small businesses, not-for-profit organizations, and small governmental jurisdictions.

Agencies must perform a review to determine whether a rule will have a significant economic impact on a substantial number of small entities. If the agency determines that it will, the agency must prepare a regulatory flexibility analysis as described in the RFA.

However, if an agency determines that a rule is not expected to have a significant economic impact on a substantial number of small entities, section 605(b) of the RFA provides that the head of the agency may so certify

and a regulatory flexibility analysis is not required. The certification must include a statement providing the factual basis for this determination, and the reasoning should be clear.

This final rule adds *Delphi Medical Systems' RS–00400* and *Invacare Corporation's XPO2* to the list of authorized POC devices in SFAR 106. Its economic impact is minimal. Therefore, as the Acting FAA Administrator, I certify that this action will not have a significant economic impact on a substantial number of small entities.

International Trade Analysis

The Trade Agreements Act of 1979 (Pub. L. 96–39), as amended by the Uruguay Round Agreements Act (Pub. L. 103–465), prohibits Federal agencies from establishing any standards or engaging in related activities that create unnecessary obstacles to the foreign commerce of the United States. Pursuant to these Acts, the establishment of standards are not considered unnecessary obstacles to the foreign commerce of the United States, so long as the standards have a legitimate domestic objective, such the protection of safety, and do not operate in a manner that excludes imports that meet this objective. The statute also requires consideration of international standards and, where appropriate, that they be the basis for U.S. standards. The FAA notes the purpose is to ensure the safety of the American public, and has assessed the effects of this rule to ensure that it does not exclude imports that meet this objective. As a result, this rule is not considered as creating an unnecessary obstacle to foreign commerce.

In accordance with the above statute and policy, the FAA has assessed the potential effect of this final rule and has determined that it will impose the same minimal impact on domestic and international entities and thus has a neutral trade impact.

Unfunded Mandates Reform Act

The Unfunded Mandates Reform Act of 1995 (the Act), enacted as Public Law 104–4 on March 22, 1995, is intended, among other things, to curb the practice of imposing unfunded Federal mandates on State, local, and tribal governments. Title II of the Act requires each Federal agency to prepare a written statement assessing the effects of any Federal mandate in a proposed or final agency rule that may result in a $100 million or more expenditure (adjusted annually for inflation) in any one year by State, local, and tribal governments, in the aggregate, or by the private sector; such a mandate is deemed to be a ''significant regulatory action.'' The FAA currently uses an inflation-adjusted value of $136.1 million in lieu of $100 million.

This final rule does not contain such a mandate. Therefore, the requirements of Title II of the Unfunded Mandates Reform Act of 1995 do not apply.

Executive Order 13132, Federalism

The FAA has analyzed this final rule under the principles and criteria of Executive Order 13132, Federalism. We determined that this action will not have a substantial direct effect on the States, or the relationship between the national Government and the States, or on the distribution of power and responsibilities among the various levels of government. Therefore, we have determined that this final rule does not have federalism implications.

Plain Language

In response to the June 1, 1998 Presidential Memorandum regarding the use of plain language, the FAA re-examined the writing style currently used in the development of regulations. The memorandum requires federal agencies to communicate clearly with the public. We are interested in your comments on whether the style of this document is clear, and in any other suggestions you might have to improve the clarity of FAA communications that affect you. You can get more information about the Presidential memorandum and the plain language initiative at *http//:www.plainlanguage.gov.*

Environmental Analysis

FAA Order 1050.1E identifies FAA actions that are categorically excluded from preparation of an environmental assessment or environmental impact statement under the National Environmental Policy Act in the absence of extraordinary circumstances. The FAA has determined this rulemaking action qualifies for the categorical exclusion identified in paragraph 312f and involves no extraordinary circumstances.

Regulations That Significantly Affect Energy Supply, Distribution, or Use

The FAA has analyzed this final rule under Executive Order 13211, Actions Concerning Regulations that Significantly Affect Energy Supply, Distribution, or Use (66 FR 28355; May 18, 2001). We have determined that it is not a ''significant energy action'' under the executive order because it is not a ''significant regulatory action'' under Executive Order 12866, and it is not likely to have a significant adverse effect on the supply, distribution, or use of energy.

The Amendment

In consideration of the foregoing, the Federal Aviation Administration amends SFAR No. 106 to Chapter II of Title 14, Code of Federal Regulations, as follows:

PART 121—OPERATING REQUIREMENTS: DOMESTIC, FLAG, AND SUPPLEMENTAL OPERATIONS

■ 1. The authority citation for part 121 continues to read as follows:

Authority: 49 U.S.C. 106(g), 1153, 40101, 40102, 40103, 40113, 41721, 44105, 44106, 44111, 44701–44717, 44722, 44901, 44903, 44904, 44906, 44912, 44914, 44936, 44938, 46103, 46105.

■ 2. Amend SFAR 106 by revising sections 2 and 3(a) introductory text to read as follows:

Special Federal Aviation Regulation 106—Rules for Use of Portable Oxygen Concentrator Systems On Board Aircraft

* * * * *

Section 2. *Definitions*—For the purposes of this SFAR the following definitions apply: Portable Oxygen Concentrator: means the *AirSep FreeStyle, AirSep LifeStyle, Delphi RS–00400, Inogen One, Invacare XPO2, Respironics EverGo,* and *SeQual Eclipse* Portable Oxygen Concentrator medical devices as long as those medical devices: (1) Do not contain hazardous materials as determined by the Pipeline and Hazardous Materials Safety Administration; (2) are also regulated by the Food and Drug Administration; and (3) assist a user of medical oxygen under a doctor's care. These units perform by separating oxygen from nitrogen and other gases contained in ambient air and dispensing it in concentrated form to the user.

Section 3. Operating Requirements—

(a) No person may use and no aircraft operator may allow the use of any portable oxygen concentrator device, except the *AirSep FreeStyle, AirSep LifeStyle, Delphi RS–00400, Inogen One, Invacare XPO2, Respironics EverGo,* or *SeQual Eclipse* Portable Oxygen Concentrator devices. These devices may be carried on and used by a passenger on board an aircraft provided the aircraft operator ensures that the following conditions are satisfied:

* * * * *

Issued in Washington, DC on January 7, 2009.

Robert Sturgell,

Acting Administrator.

[FR Doc. E9–790 Filed 1–14–09; 8:45 am]

BILLING CODE 4910–13–P

DEPARTMENT OF COMMERCE

Bureau of Industry and Security

15 CFR Parts 742, 744 and 746

[Docket No. 0811241505–81513–01]

RIN 0694–AE50

License Requirements Policy for Iran and for Certain Weapons of Mass Destruction Proliferators

AGENCY: Bureau of Industry and Security, Commerce.

ACTION: Interim final rule.

SUMMARY: This rule revises and clarifies the Export Administration Regulations (EAR) provisions that apply specifically to Iran in order to promote consistency, reduce redundancy and clarify the role of the Bureau of Industry and Security (BIS) in connection with the implementation of United States export control policy towards Iran. It establishes a new license requirement for reexports of items classified under ten Export Control Classification Numbers (ECCNs) that previously did not require a license for reexport to Iran under the EAR. This rule also imposes license requirements on parties who have been listed as proliferators of weapons of mass destruction or as supporters of such proliferators pursuant to Executive Order 13382. BIS is making these changes to provide greater clarity and consistency with respect to policies towards Iran and to harmonize BIS license requirements with Department of the Treasury license requirements regarding proliferators of weapons of mass destruction.

DATES: This rule is effective January 15, 2009.

FOR FURTHER INFORMATION CONTACT: William Arvin, Regulatory Policy Division, *warvin@bis.doc.gov*, 202 482 2440 or Anthony Christino, Foreign Policy Division, *tchristi@bis.doc.gov* 202 482 3241.

SUPPLEMENTARY INFORMATION:

Background

The EAR imposes license requirements on certain exports and reexports to Iran. These license requirements apply in addition to any requirements for authorization to export or reexport to Iran that are imposed by the Department of the Treasury, Office of Foreign Assets Control (OFAC), which maintains a comprehensive embargo against Iran, as described in the Iranian Transactions Regulations (31 CFR part 560). The EAR license requirements and licensing policy that apply specifically and expressly to Iran are in parts 742 and 746 of the EAR. This rule makes changes to those parts to promote consistency, reduce redundancy and to clarify the role of the Bureau of Industry and Security (BIS) in connection with the enforcement of United States export control policy towards Iran. It establishes a license requirement for reexports of items classified under ten Export Control Classification Numbers (ECCNs) that previously did not require a license for reexport to Iran under the EAR. This rule also adds a new § 744.8 to the EAR that imposes a license requirement on exports and reexports to parties listed by OFAC in Appendix A to 31 CFR Chapter V with the bracketed suffix [NPWMD].

Revisions to Part 742—Anti-Terrorism (AT) Controls

Section 742.8 of the EAR describes the license requirements and licensing policy for items controlled for anti-terrorism (AT) reasons to Iran. Prior to publication of this rule, reexports of items classified under ECCNs 2A994, 3A992.a, 5A991.g, 5A992, 6A991, 6A998, 7A994, 8A992.d, .e, .f, and .g, 9A990.a and .b, 9A991.d and .e, were not subject to license requirements under the EAR when reexported to Iran. In addition, the items controlled under these ECCNs were not treated as ''controlled U.S. content'' when incorporated into foreign made items being exported from abroad to Iran for purposes of determining whether the foreign made item had sufficient ''controlled U.S. content'' to be subject to the EAR. This rule revises § 742.8 to make those items subject to reexport license requirements under the EAR and to treat them as ''controlled U.S. content.''

This rule also adds ECCNs 1C350, 1C355 and 1C395 to the license requirements paragraph in § 742.8. These three ECCNs contain license requirements that state ''anti-terrorism'' as a reason for control and that apply to Iran either by name or as part of Country Group E:1. However, prior to publication of this rule, these three ECCNs were not referenced in § 742.8(a). Adding these three ECCNs § 742.8(a) make that section consistent with BIS's policy of stating all anti-terrorism license requirements that apply to Iran in that section.

In addition, this rule moves all descriptions of transactions that are subject to the requirements of section 6(j) of the Export Administration Act and those that are subject to the requirements of section 6(a) of that Act from Supplement No. 2 to part 742 into § 742.8(a)(4). Section 6(j) applies when the Secretary of State determines that the export of an item could make a significant contribution to the military potential of a country that has repeatedly provided support for acts of international terrorism, or could enhance the ability of such country to support acts of international terrorism. BIS may not issue a license for transactions subject to section 6(j) without giving 30 days advance notice to certain committees of Congress. License applications for items controlled to designated terrorist-supporting countries under Section 6(a) are also reviewed to determine whether section 6(j) applies.

Finally, this rule removes all references to ''contract sanctity'' dates applicable to Iran from Supplement No. 2 to part 742. The ''contract sanctity'' dates refer to the dates on which reports that are prerequisites to imposing, expanding or extending foreign policy controls pursuant to Section 6 of the Export Administration Act were delivered to Congress. Transactions to fulfill contracts entered into prior to those dates may be subject to the rules that were in effect prior to delivery of the report. Removing the dates from Supplement No. 2 to Part 742 has no effect on the rights of any person to assert that a transaction is subject to earlier rules.

Revisions to Part 744—Control Policy: End-Use and End-User Based

This rule adds a new § 744.8, which imposes a license requirement on certain parties whom the Department of the Treasury, Office of Foreign Assets Control (OFAC) has listed in Appendix A to 31 CFR Chapter V with the bracketed suffix [NPWMD]. OFAC also provides lists of these parties in a variety of data formats at *http://www.treas.gov/offices/enforcement/ofac/sdn/index.shtml.* OFAC lists such parties pursuant to its authority under Executive Order 13382 of June 28, 2005. Executive Order 13382 blocks the property and interests in property of certain parties determined to be weapons of mass destruction proliferators or their supporters.

This rule complements OFAC's regulatory authority under Executive Order 13382. For transactions requiring

authorization from both OFAC and BIS (pursuant to Section 744.8 of the EAR), authorization from OFAC will serve to meet EAR license requirements. However, for exports and reexports involving listed parties in situations where OFAC authorization is not required and where the item being exported or reexported is subject to the Export Administration Regulations, a BIS license must be obtained.

This rule also makes a technical and conforming change by referring to the new § 744.8 in § 744.1(a).

Revisions to Part 746—Embargoes and Special Controls

This rule removes from the introductory paragraph of § 746.7, the extensive discussion of the authority of the Department of the Treasury to implement comprehensive trade sanctions against Iran. That discussion has no legal effect for purposes of the EAR and could be a source of confusion.

As noted in the discussion of the revisions to part 742 described above, prior to publication of this rule, reexports of items classified under ECCNs 2A994, 3A992.a, 5A991.g, 5A992, 6A991, 6A998, 7A994, 8A992.d, .e, .f, and .g, 9A990.a and .b, 9A991.d and .e, were not subject to license requirements under the EAR when being reexported to Iran. This rule revises § 746.7 to make those items subject to reexport license requirements.

This rule also adds ECCNs 0A982, 0A985, 0E982, 1C355, 1C395, 2A994, 2D994, 2E994 to the license requirements paragraph in § 746.7. These eight ECCNs contain license requirements that are not based on the Commerce Country Chart, but that apply to Iran either by name or as part of Country Group E:1. BIS's policy is to state all of the Commerce Control List based license requirements that apply to Iran in § 746.7. However, prior to publication of this rule, these eight ECCNs were not referenced in the license requirements paragraph in § 746.7. Adding these eight ECCNs to that license requirements paragraph makes § 746.7 consistent with BIS's policy of stating all license requirements that apply to Iran in that section.

In addition, this rule removes the definition of ''U.S. person'' from § 746.7 because that term in not used with respect to any BIS license requirements in that section.

This rule also adds a statement of licensing policy to § 746.7 indicating that applications for licenses for transactions for humanitarian reasons or for the safety of civil aviation and safe operation of U.S-origin aircraft will be considered on a case-by-case basis. Applications for other purposes generally will be denied. This addition aligns § 746.7 more closely with OFAC's Iranian Transactions Regulations.

Finally this rule revises for clarity and precision a prohibition against exporting or reexporting items that are subject to the EAR if the transaction is prohibited by the Iranian Transactions Regulations and not authorized by OFAC that, prior to publication of this rule appeared in the introductory paragraph of § 746.7. This rule also moves that statement to its own designated paragraph. BIS is making this change to place emphasis on that prohibition with a view towards enhancing its enforceability.

Consistent with the provisions of section 6 of the Export Administration Act of 1979, as amended (EAA), a foreign policy report was submitted to Congress on January 9, 2009, notifying Congress of the imposition of foreign policy-based licensing requirements reflected in this rule.

Although the EAA expired on August 20, 2001, the President, through Executive Order 13222 of August 17, 2001, 3 CFR, 2001 Comp., p. 783 (2002), which has been extended by successive Presidential Notices, the most recent being that of July 23, 2008, 73 FR 43603 (July 25, 2008), has continued the EAR in effect under the International Emergency Economic Powers Act.

Rulemaking Requirements

1. This final rule has been determined to be not significant for purposes of Executive Order 12866.

2. Notwithstanding any other provision of law, no person is required to respond to, nor shall any person be subject to a penalty for failure to comply with a collection of information, subject to the requirements of the Paperwork Reduction Act, unless that collection of information displays a currently valid Office of Management and Budget Control Number. This rule involves a collection of information that has been approved by the OMB under control number 0694–0088, ''Simplified Network Application Processing + System (SNAP+) and the Multipurpose Export License Application'' which carries a burden hour estimate of 58 minutes to prepare and submit form BIS–748. Miscellaneous and recordkeeping activities account for 12 minutes per submission. BIS believes that this rule will make no change in the number of submissions under this collection or in the estimated burden. Send comments regarding these burden estimates or any other aspect of these collections of information, including suggestions for reducing the burden, to Jasmeet Seehra Office of Management and Budget, by e-mail at *jseehra@omb.eop.gov* or by fax to (202) 395–7285; and to the Regulatory Policy Division, Bureau of Industry and Security, Department of Commerce, Room 2705, 14th Street and Pennsylvania Ave., NW., Washington, DC 20230.

3. This rule does not contain policies with Federalism implications as that term is defined in Executive Order 13132.

4. The provisions of the Administrative Procedure Act (5 U.S.C. 553) requiring notice of proposed rulemaking, the opportunity for public participation, and a delay in effective date, are inapplicable because this regulation involves a military or foreign affairs function of the United States (see 5 U.S.C. 553(a)(1)). Further, no other law requires that a notice of proposed rulemaking and an opportunity for public comment be given for this rule. Because a notice of proposed rulemaking and an opportunity for public comment are not required to be given for this rule by 5 U.S.C. 553, or by any other law, the analytical requirements of the Regulatory Flexibility Act, 5 U.S.C. 601 *et seq*, are not applicable.

List of Subjects

15 CFR Part 742

Exports, Terrorism.

15 CFR Part 744

Exports, Reporting and recordkeeping requirements, Terrorism.

15 CFR Part 746

Exports, Reporting and recordkeeping requirements.

■ Accordingly, the Export Administration Regulations (15 CFR parts 730–774) are amended as follows.

PART 742—[AMENDED]

■ 1. The authority citation for part 742 continues to read as follows:

Authority: 50 U.S.C. app. 2401 *et seq.*; 50 U.S.C. 1701 *et seq.*; 22 U.S.C. 3201 *et seq.*; 42 U.S.C. 2139a; 22 U.S.C. 7201 *et seq.*; 22 U.S.C. 7210; Sec 1503, Public Law 108–11, 117 Stat. 559; E.O. 12058, 43 FR 20947, 3 CFR, 1978 Comp., p. 179; E.O. 12851, 58 FR 33181, 3 CFR, 1993 Comp., p. 608; E.O. 12938, 59 FR 59099, 3 CFR, 1994 Comp., p. 950; E.O. 13026, 61 FR 58767, 3 CFR, 1996 Comp., p. 228; E.O. 13222, 66 FR 44025, 3 CFR, 2001 Comp., p. 783; Presidential Determination 2003–23 of May 7, 2003, 68 FR 26459, May 16, 2003; Notice of July 23, 2008, 73 FR 43603 (July 25, 2008); Notice of November 10, 2008, 73 FR 67097 (November 12, 2008).

■ 2. Revise § 742.8(a)(1), remove and reserve § 742.8(a)(2), and revise § 742.8(a)(4) and § 742.8(c) to read as follows:

§ 742.8 Anti-terrorism: Iran.

(a) *License Requirements.* (1) A license is required for anti-terrorism purposes to export or reexport to Iran any item for which AT column 1 or AT column 2 is indicated in the Country Chart column of the applicable ECCN or any item described in ECCNs 1C350, 1C355, 1C395, 2A994, 2D994 and 2E994. See paragraph (a)(5) of this section for controls maintained by the Department of the Treasury. See § 746.7 of the EAR for additional EAR license requirements that apply to Iran.

(2) [Reserved]

* * * * *

(4) In support of U.S. foreign policy applicable to terrorism-supporting countries, the EAR imposes anti-terrorism license requirements on exports and reexports to Iran pursuant to sections 6(j) and 6(a) of the Export Administration Act.

(i) *Section 6(j) anti-terrorism controls.* Section 6(j) requirements apply to all exports and reexports destined to the police, military or other sensitive end-users of items listed on the Commerce Control List (Supp. No. 1 to part 774 of the EAR) for which any listed reason for control in the applicable ECCN is NS (national security), CB (chemical or biological weapons proliferation), MT (missile proliferation), NP (nuclear weapons proliferation) or an Export Control Classification Number ending in ''18'' (military related items). BIS may not issue a license for a transaction subject to section 6(j) controls until 30 days after the notification described in Section 6(j)(2) of the Export Administration Act is delivered to the committees of Congress specified in that section. License applications for all other items controlled under section 6(a) are also reviewed to determine whether section 6(j) applies.

(ii) *Section 6(a) anti-terrorism controls.* Section 6(a) requirements apply to all exports and reexports regardless of the end user of items described in paragraph (a)(1) of this section. * * *

(c) *Contract Sanctity.* Section 6(f) of the Export Administration Act requires that a report be delivered to Congress before foreign policy based export controls are imposed, expanded or extended. Consistent with section 6(p) of the Export Administration Act, certain exports or reexports in fulfillment of contracts entered into before such delivery of the report applicable to a particular license requirement or licensing policy may be subject to the license requirements and licensing policy that were in force before the report was delivered. License applicants who wish to have their application considered under such pre-existing requirements or policy must include evidence of the pre-existing contract with their license applications.

* * * * *

Supplement No. 2 to Part 742—[Amended]

■ 3. Amend Supplement No. 2 to Part 742 by:

■ a. Removing ''Iran,'' from the heading;

■ b. Removing ''Iran,'' from paragraph (a), paragraph (b)(1) and paragraph (b)(3), introductory text;

■ c. Removing the phrase ''for Iran, items in paragraphs (c)(6) through (c)(44) of this Supplement;'' from paragraph (b)(3)(ii);

■ d. Removing ''Iran,'' and ''742.8,'' from the first sentence of paragraph (c), introductory text;

■ e. Removing ''Iran'' from each place that it appears in the second sentence of paragraph (c), introductory text;

■ f. Removing the third, fourth and fifth sentences of paragraph (c) introductory text;

■ g. Removing and reserving paragraph (c)(1)(i);

■ h. Removing ''Iran,'' from the first sentence of paragraph (c)(2) and the phrase ''Iran and'' from the second sentence of paragraph (c)(2);

■ i. Removing ''Iran,'' from the first sentence of paragraph (c)(3);

■ j. Removing ''Iran and'' from the second sentence of paragraph (c)(3);

■ k. Removing and reserving paragraphs (c)(4)(i), (c)(5)(i), (c)(6)(i), (c)(7)(i), (c)(8)(i), (c)(9)(i), (c)(10)(i), (c)(11)(i), (c)(12)(i) (c)(13)(i), (c)(14)(i), (c)(15)(i), (c)(16)(i), (c)(17)(i), (c)(18)(i), (c)(19)(i), (c)(20)(i), (c)(21)(i), (c)(22)(i), (c)(23)(i), (c)(24)(i), (c)(25)(ii), (c)(26)(i)(A);

■ l. Removing ''Iran,'' from paragraph (c)(27); and

■ m. Removing and reserving paragraphs (c)(27)(i), (c)(28)(i), (c)(29)(i), (c)(30)(i), (c)(31)(i), (c)(32)(i), (c)(33)(i), (c)(34)(i), (c)(35)(i), (c)(36)(i), (c)(37)(i), (c)(38)(i), (c)(39)(i)(A), (c)(39)(ii)(A), (c)(40)(i), (c)(41)(i), (c)(42)(i), (c)(43)(i) and (c)(44)(i).

PART 744—[AMENDED]

■ 4. The authority citation for part 744 continues to read as follows:

Authority: 50 U.S.C. app. 2401 *et seq.*; 50 U.S.C. 1701 *et seq.*; 22 U.S.C. 3201 *et seq.*; 42 U.S.C. 2139a; 22 U.S.C. 7201 *et seq.*; 22 U.S.C. 7210; E.O. 12058, 43 FR 20947, 3 CFR, 1978 Comp., p. 179; E.O. 12851, 58 FR 33181, 3 CFR, 1993 Comp., p. 608; E.O. 12938, 59 FR 59099, 3 CFR, 1994 Comp., p. 950; E.O. 12947, 60 FR 5079, 3 CFR, 1995 Comp., p. 356; E.O. 13026, 61 FR 58767, 3 CFR, 1996 Comp., p. 228; E.O. 13099, 63 FR 45167, 3 CFR, 1998 Comp., p. 208; E.O. 13222, 66 FR 44025, 3 CFR, 2001 Comp., p. 783; E.O. 13224, 66 FR 49079, 3 CFR, 2001 Comp., p. 786; Notice of July 23, 2008, 73 FR 43603 (July 25, 2008); Notice of November 10, 2008, 73 FR 67097 (November 12, 2008).

■ 5. In § 744.1 revise the fifth sentence of paragraph (a)(1) and add a new sentence between the current fifth and sixth sentences to read as follows:

§ 744.1 General provisions.

(a)(1) * * * Section 744.7 prohibits exports and reexports of certain items for certain aircraft and vessels. Section 744.8 prohibits exports and reexports without authorization to certain parties who have been designated as proliferators of weapons of mass destruction or as supporters of such proliferators pursuant to Executive Order 13382.

* * * * *

■ 6. Add a § 744.8 to read as follows:

§ 744.8 Restrictions on exports and reexports to persons designated pursuant to Executive Order 13382—Blocking Property of Weapons of Mass Destruction Proliferators and Their Supporters.

BIS maintains restrictions on exports and reexports to persons designated in or pursuant to Executive Order 13382 of June 28, 2005 (Weapons of Mass Destruction Proliferators and their Supporters). Executive Order 13382 blocks the property and interests in property of persons named in or designated pursuant to Executive Order 13382 in the United States or that comes within the United States or within the possession or control of United States persons. The parties whose property or interests in property are blocked pursuant to Executive Order 13382 are identified by the Department of the Treasury, Office of Foreign Assets Control (OFAC) in Appendix A to 31 CFR Chapter V with the bracketed suffix [NPWMD]. This section imposes export and reexport license requirements for items subject to the EAR on those same parties to further the objectives of Executive Order 13382.

(a) *License requirement(s) and authorization.*

(1) *EAR license requirement.* A license is required for the export or reexport of any item subject to the EAR to any party listed in Appendix A to 31 CFR Chapter V with the bracketed suffix [NPWMD].

(2) *BIS authorization.* (i) To avoid duplication, U.S. persons are not required to seek separate authorization from BIS for an export or reexport to a

party listed in Appendix A to 31 CFR Chapter V with the bracketed suffix [NPWMD] of an item subject to the EAR. If OFAC authorizes an export from the United States or an export or reexport by a U.S. person to a party listed in Appendix A to 31 CFR Chapter V with the bracketed suffix [NPWMD], such authorization constitutes authorization for purposes of the EAR as well.

(ii) U.S. persons must seek authorization from BIS for the export or reexport to a party listed in Appendix A to 31 CFR Chapter V with the bracketed suffix [NPWMD] of any item subject to the EAR that is not subject to OFAC's regulatory authority pursuant to Executive Order 13382.

(iii) Non-U.S. persons must seek authorization from BIS for any export from abroad or reexport to a party listed in Appendix A to 31 CFR Chapter V with the bracketed suffix [NPWMD] of any item subject to the EAR.

(iv) Any export or reexport to a party listed in Appendix A to 31 CFR Chapter V with the bracketed suffix [NPWMD] of any item subject to the EAR and not authorized by OFAC is a violation of the EAR.

(v) Any export or reexport by a U.S. person to a party listed in Appendix A to 31 CFR Chapter V with the bracketed suffix [NPWMD] of any item subject to the EAR that is not subject to regulation by OFAC and not authorized by BIS is a violation of the EAR. Any export from abroad or reexport by a non-U.S. person to a party listed in Appendix A to 31 CFR Chapter V with the bracketed suffix [NPWMD] of any item subject to the EAR and not authorized by BIS is a violation of the EAR.

(3) *Relation to other EAR license requirements.* The license requirements in this section supplement any other requirements set forth elsewhere in the EAR.

(b) *License exceptions.* No license exceptions are available for the EAR license requirements imposed in this section.

(c) *Licensing policy.* Applications for EAR licenses required by this section generally will be denied. You should consult with OFAC concerning transactions subject to OFAC licensing requirements.

(d) *Contract sanctity.* Contract sanctity provisions are not available for license applications reviewed under this section.

PART 746—[AMENDED]

■ 7. The authority citation for part 746 continues to read as follows:

Authority: 50 U.S.C. app. 2401 *et seq.*; 50 U.S.C. 1701 *et seq.*; 22 U.S.C. 287c; Sec 1503, Public Law 108–11, 117 Stat. 559; 22 U.S.C. 6004; 22 U.S.C. 7201 *et seq.*; 22 U.S.C. 7210; E.O. 12854, 58 FR 36587, 3 CFR, 1993 Comp., p. 614; E.O. 12918, 59 FR 28205, 3 CFR, 1994 Comp., p. 899; E.O. 13222, 3 CFR, 2001 Comp., p. 783; Presidential Determination 2003–23 of May 7, 2003, 68 FR 26459, May 16, 2003; Presidential Determination 2007–7 of December 7, 2006, 72 FR 1899 (January 16, 2007); Notice of July 23, 2008, 73 FR 43603 (July 25, 2008).

■ 8. Revise § 746.7 to read as follows:

§ 746.7 Iran.

The Treasury Department's Office of Foreign Assets Control (OFAC) administers a comprehensive trade and investment embargo against Iran. This embargo includes prohibitions on exports and certain reexport transactions involving Iran, including transactions dealing with items subject to the EAR. These prohibitions are set forth in OFAC's Iranian Transactions Regulations (31 CFR part 560). In addition, BIS maintains licensing requirements on exports and reexports to Iran under the EAR as described in paragraph (a)(1) of this section or elsewhere in the EAR (*See, e.g.*, § 742.8—Anti-terrorism: Iran).

(a) *License requirements.*

(1) *EAR license requirements.* A license is required under the EAR to export or reexport to Iran any item on the CCL containing a CB Column 1, CB Column 2, CB Column 3, NP Column 1, NP Column 2, NS Column 1, NS Column 2, MT Column 1, RS Column 1, RS Column 2, CC Column 1, CC Column 2, CC Column 3, AT Column 1 or AT Column 2 in the Country Chart Column of the License Requirements section of an ECCN or classified under ECCNs 0A980, 0A982, 0A983, 0A985, 0E982, 1C355, 1C395, 1C980, 1C981, 1C982, 1C983, 1C984, 2A994, 2D994, 2E994, 5A980, 5D980, or 5E980.

(2) *BIS authorization.* To avoid duplication, exporters or reexporters are not required to seek separate authorization from BIS for an export or reexport subject both to the EAR and to OFAC's Iranian Transactions Regulations. Therefore, if OFAC authorizes an export or reexport, such authorization is considered authorization for purposes of the EAR as well. Transactions that are not subject to OFAC regulatory authority may require BIS authorization.

(b) *Licensing Policy.* Applications for licenses for transactions for humanitarian reasons or for the safety of civil aviation and safe operation of U.S-origin aircraft will be considered on a case-by-case basis. Licenses for other purposes generally will be denied.

(c) *License Exceptions.* No license exceptions may be used for exports or reexports to Iran.

(d) *EAR Anti-terrorism controls.* The Secretary of State has designated Iran as a country that has repeatedly provided support for acts of international terrorism. Anti-terrorism license requirements and licensing policy regarding Iran are set forth in § 742.8 of the EAR.

(e) *Prohibition on exporting or reexporting EAR items without required OFAC authorization.* No person may export or reexport any item that is subject to the EAR if such transaction is prohibited by the Iranian Transactions Regulations (31 CFR part 560) and not authorized by OFAC. The prohibition of this paragraph (e) applies whether or not the EAR requires a license for the export or reexport.

Dated: January 9, 2009.

Christopher R. Wall,

Assistant Secretary for Export Administration.

[FR Doc. E9–726 Filed 1–14–09; 8:45 am]

BILLING CODE 3510–33–P

DEPARTMENT OF HEALTH AND HUMAN SERVICES

Food and Drug Administration

21 CFR Part 56

[Docket No. FDA–2004–N–0117] (formerly Docket No. 2004N–0242)

RIN 0910–AB88

Institutional Review Boards; Registration Requirements

AGENCY: Food and Drug Administration, HHS.

ACTION: Final rule.

SUMMARY: The Food and Drug Administration (FDA, we) is issuing a final rule to require institutional review boards (IRBs) to register through a system maintained by the Department of Health and Human Services (HHS). The registration information includes contact information (such as addresses and telephone numbers), the number of active protocols involving FDA-regulated products reviewed during the preceding 12 months, and a description of the types of FDA-regulated products involved in the protocols reviewed. The IRB registration requirements will make it easier for FDA to inspect IRBs and to convey information to IRBs.

DATES: This rule is effective July 14, 2009. This effective date is necessary to allow refinement of the electronic

registration system so that it corresponds to this final rule. All IRBs must comply with the initial registration requirement and, if necessary, make required revisions to their registrations by September 14, 2009.

FOR FURTHER INFORMATION CONTACT: Erik Mettler, Office of Policy, Planning and Preparedness, Food and Drug Administration, WO1, rm. 4324, Silver Spring, MD 20993–0002, 301–796–4830.

SUPPLEMENTARY INFORMATION:

I. Introduction

What Led Us to Issue This Rule?

IRBs are ''boards, committees, or groups formally designated by an institution to review, to approve the initiation of, and to conduct periodic review of, biomedical research involving human subjects'' (see 21 CFR 56.102(g)). An IRB's primary purpose during such reviews is to assure the protection of the rights and welfare of human subjects (id.). FDA's general regulations pertaining to IRBs are at part 56 (21 CFR part 56). (While section 520(g) of the Federal Food, Drug, and Cosmetic Act (''the act'') (21 U.S.C. 360j(g)) refers to ''institutional review committees'' rather than IRBs, FDA considers institutional review committees to be IRBs and to be subject to the IRB regulations.)

Even though IRBs play an important role in the conduct of clinical investigations regulated by FDA, we have never compiled a comprehensive list of IRBs involved in reviewing clinical investigations regulated by FDA. Existing FDA regulations have required some, but not all, clinical investigators or sponsors of clinical investigations to provide IRB names and addresses to FDA, and the requirements differ slightly among the different types of products regulated by FDA. For example, for human drug products, the sponsor must disclose the name and address of ''each reviewing'' IRB (see 21 CFR 312.23(a)(6)(iii)(b)). For medical devices, the sponsor must disclose the names and addresses of IRBs that ''have been asked *or will be asked*'' to review the investigation (see 21 CFR 812.20(b)(7)) (emphasis added). For other types of clinical investigations regulated by FDA (such as food additive studies involving human subjects), the regulations do not expressly require the sponsor or the clinical investigator to disclose or keep records showing an IRB's name and address, and they make no distinction between ''reviewing IRBs'' and IRBs that have been asked or will be asked to review a study.

In 1998, the Department of Health and Human Services' Office of the Inspector General (OIG) issued several reports on IRBs. The OIG sought to identify the challenges facing IRBs and to make recommendations on improving Federal oversight of IRBs. One recommendation was that all IRBs should register with the Federal Government on a regular basis as part of an effort to develop more streamlined, coordinated, and probing means of assessing IRB performance and to enhance the Federal Government's ability to identify and respond to emerging problems before they result in ''serious transgressions'' (see Office of the Inspector General, Department of Health and Human Services, *Institutional Review Boards: a Time for Reform*, pages 20 and 21, June 1998).

After reviewing the OIG's recommendation, we concluded that IRB registration would serve several important goals. IRB registration would:

- Enable us to identify more precisely those IRBs reviewing clinical investigations regulated by FDA. At present, much of our knowledge about the identities and numbers of IRBs reviewing clinical investigations regulated by FDA is based on information from persons conducting or sponsoring clinical investigations rather than from IRBs themselves. This information may be obsolete (because there may be no obligation to update the information) or incomplete (because the requirements to report the names and addresses of IRBs are not uniform across all FDA-regulated products);
- Enable us to send educational information and other information to IRBs. Because we lack an accurate list of IRBs, our outreach and educational efforts are not as efficient as they might be. Changes in IRB addresses result in returned mail, and newly formed IRBs may not appear in FDA's mailing lists; and
- Help us identify IRBs for inspection, because we would have a more accurate list of IRBs.

Consequently, FDA, in consultation with the Department of Health and Human Services, Office for Human Research Protections (OHRP), published a proposed rule in the **Federal Register** of July 6, 2004 (69 FR 40556), that would require IRB registration for IRBs reviewing clinical investigations involving FDA-regulated products. OHRP issued a companion proposed rule which appeared in the **Federal Register** of July 6, 2004 (69 FR 40584) that would require registration for IRBs reviewing federally supported research. The final OHRP IRB registration rule is published elsewhere in this issue of the **Federal Register**.

The goal of the two rules is to create a simple, electronic registration system that all IRBs, regardless of whether they review clinical investigations regulated by FDA or federally supported research, can use.

II. What Comments Did We Receive?

A. How Many Comments Did We Receive, and Who Submitted Comments?

We received over 15 comments in response to the proposed rule. Individuals, IRB members, IRB associations, an IRB accreditation association, government, health, academic or trade associations, a university system, and drug companies submitted comments. In general, the comments supported IRB registration, although some disagreed with specific aspects of the proposal or with other issues that were discussed in the preamble to the proposed rule. To make it easier to identify comments and our responses, the word ''Comment,'' in parentheses, will appear before the comment's description, and the word ''Response,'' in parentheses, will appear before our response. We have also numbered each comment to help distinguish between different comments. The number assigned to each comment is purely for organizational purposes and does not signify the comment's value or importance or the order in which it was received.

B. Who Must Register? (Section 56.106(a))

Proposed § 56.106(a) would require the following IRBs to register:

- Each IRB in the United States that reviews clinical investigations regulated by FDA under sections 505(i) (21 U.S.C. 355(i)) or 520(g) of the act; and
- Each IRB in the United States that reviews clinical investigations that are intended to support applications for research or marketing permits for FDA-regulated products.

The preamble to the proposed rule invited comment on whether there are circumstances in which foreign IRBs should be required or invited to register (see 69 FR 40556 at 40558).

(Comment 1) One comment stated that foreign IRBs are not needed in America.

(Response) The comment may have misinterpreted the preamble. The issue is not whether foreign IRBs should or should not review studies, but rather whether foreign IRBs should be included in the IRB registration system.

(Comment 2) Several comments differed as to whether foreign IRBs should have to register. One comment would require foreign IRBs to register if they review research conducted in the

United States; the same comment would give foreign IRBs the option to register if they review research conducted outside the United States that may be used to support a future marketing application in the United States.

Several comments would allow for voluntary registration of foreign IRBs or ethical review committees. Two comments explained that registering foreign IRBs would enable them to have access to educational materials and other information. However, one comment would limit such registration to foreign IRBs reviewing research conducted in the United States, and another comment noted that local privacy laws in foreign countries might affect a foreign IRB's ability to provide certain registration information.

In contrast, one comment said that we should respect oversight of ethical review committees by foreign authorities and that we should not impose ''additional bureaucracy.'' Similarly, another comment opposed registering foreign IRBs, stating that such registration could pose ''significant difficulties'' for clinical investigators and sponsors and that foreign laws and regulations might make it difficult for foreign IRBs to register.

(Response) We agree in part with the comments. We agree that foreign IRBs would benefit from educational and other materials that would be sent to registered IRBs. Therefore, we have revised § 56.106(a) to allow for voluntary registration by foreign IRBs and by any domestic IRB that is not otherwise required to register.

We decline to require registration by foreign IRBs that review research to be conducted in the United States. We do not believe a significant number of foreign IRBs review research that is to be conducted in the United States. Furthermore, requiring registration by foreign IRBs that review research conducted in the United States could lead to arguments over the validity of our regulatory authority when applied to actions occurring in a foreign country.

As for possible problems foreign IRBs might encounter in registering information due to foreign laws and regulations, the comments did not identify specific registration elements that would be a problem. Consequently, we lack sufficient information to determine whether we should modify certain IRB registration elements to accommodate foreign IRBs.

(Comment 3) One comment asked us to clarify whether the reference to section 520(g) of the act was limited to research done under an investigational device exemption (IDE) or encompassed all investigational devices in a clinical investigation.

(Response) The reference to section 520(g) of the act encompasses all investigational devices in a clinical investigation, regardless of whether FDA approval of an IDE is needed in accordance with 21 CFR part 812 for the clinical investigation.

(Comment 4) One comment asked us to clarify whether the rule applied to ''non-local'' or ''commercial'' IRBs.

(Response) The comment did not explain what it meant by the terms ''non-local'' or ''commercial'' IRB. For purposes of this response, we will assume that a ''non-local'' IRB is one that is physically located away from the clinical trial site(s) and that a ''commercial'' IRB is one that is paid to review research.

If the ''non-local'' or ''commercial'' IRB is located in the United States and:

- Reviews clinical investigations regulated by FDA under sections 505(i) or 520(g) of the act; or
- Reviews clinical investigations that are intended to support applications for research or marketing permits for FDA-regulated products, then the non-local or commercial IRB must register under § 56.106(a). If the non-local or commercial IRB does not perform any of the reviews described immediately above or is outside the United States, then it may register voluntarily.

C. What Information Must an IRB Register? (Section 56.106(b))

Proposed § 56.106(b) would describe the information that IRBs would provide as part of the registration process. For example, proposed § 56.106(b)(1) would require the name and mailing address of the institution operating the IRB and the name, mailing address, phone number, facsimile number, and electronic mail address of the senior officer of that institution who is responsible for overseeing the IRB's activities. (A facsimile number also is known more commonly as a ''fax number.'')

(Comment 5) Several comments addressed the registration information in proposed § 56.106(b) generally. Two comments said that the registration information that OHRP and FDA would require should either be the same or that information required by OHRP, but not by FDA, should be clearly delineated and marked as optional for IRBs that are subject to FDA regulation. Similarly, one comment said that questions relating to research funded by HHS, which were part of OHRP's proposed registration system, should be identified clearly so IRBs that do not review HHS-funded research are not obliged to answer those questions.

Another comment said the proposed registration information is appropriate.

One comment urged us to reexamine the registration information to assure that the information is necessary to support the rule's stated goals.

(Response) We coordinated our rule with OHRP and tailored our respective registration information elements to be as consistent as possible and to use the same internet-based registration system.

We agree that the IRB registration system should specify whether certain registration information is optional or not required for IRBs subject only to our jurisdiction. The preamble to the proposed rule stated that, ''In those instances where the Internet registration site would seek more information than FDA would require under this proposal, the site would clarify that IRBs regulated solely by FDA may, but are not required to, provide the additional information'' (69 FR 40556 at 40558). The Internet registration site will be structured so that required information will be identified or marked as such, and IRBs indicating that they are registering pursuant to FDA's regulation also will be directed to questions requesting information required only under FDA's regulation.

(Comment 6) Proposed § 56.106(b)(1) would require IRBs to provide the name and mailing address of the institution operating the IRB and the name, mailing address, phone number, facsimile number, and electronic mail address of the ''senior officer of that institution who is responsible for overseeing activities performed by the IRB.'' The preamble to the proposed rule explained that the senior officer ''must not be an IRB member, IRB staff, or a sponsor or investigator participating in an investigation under review by that IRB'' (see 69 FR 40556 at 40558).

Several comments addressed this provision. Two comments supported the proposed requirement, but two other comments stated that our interpretation of ''senior officer'' was too prohibitive or too restrictive. These comments said that if a senior officer is on the IRB, his or her membership should not invalidate registration or subject the IRB to enforcement action.

Another comment questioned what we meant when we referred to ''IRB staff.'' The comment said that some IRBs distinguish staff from IRB members to ensure the IRB's integrity and independence. The comment suggested that we list persons who cannot be a ''senior officer'' and that we delete ''IRB staff'' from that list.

(Response) We agree, in part, with the comments. We recognize that, in some cases, it may not be feasible to identify

a ''senior officer'' who is not also an IRB member or IRB staff. However, our experience indicates that IRBs sometimes form subcommittees or other groups and that the institutions overseeing the IRBs may not be aware of these subcommittees or other groups. Thus, when we said that the ''senior officer'' should not be an IRB member or IRB staffer, our goal was to ensure that the institution overseeing the IRB's activities is truly aware of those activities. For these reasons, where feasible, we recommend that the senior officer not be an IRB member or an IRB staffer.

Additionally, as the preamble to the proposed rule stated, information regarding the institution will enable us to identify the institution and to determine whether problems that might exist for one IRB at that institution exist at other IRBs affiliated with that institution (see 69 FR 40556 at 40558).

Additionally, on our own initiative, we have revised § 56.106(b)(1) to require the street address for the institution if the street address is different from the institution's mailing address.

(Comment 7) One comment said we should ensure that any addresses and telephone numbers are current and are kept current. The comment suggested that we issue fines and penalties if IRBs fail to keep such information current.

(Response) Section 56.106(e) requires IRBs to revise their registration information within 90 days if a contact person or chairperson information changes; this would encompass changes in the contact person's or chairperson's telephone number.

As for the comment's suggestion of imposing fines and penalties, we do not have legal authority to impose fines for failure to maintain IRB registration information. As for other penalties, we discuss the consequences of failing to register in comment 24 of this document.

(Comment 8) Proposed § 56.106(b)(2) would require IRBs to provide the IRB's name, the names of each IRB chair person and each contact person (if one exists) for the IRB, and the IRB's mailing address, street address (if different from the mailing address), phone number, facsimile number, and electronic mail address.

One comment supported the proposal. However, another comment noted that the OHRP proposal would require IRBs to provide the name, gender, degree, scientific or nonscientific specialty, and affiliation of each IRB member and suggested that we revise our rule to require the same information as the OHRP rule.

(Response) We agree, in part, and disagree, in part, with the comment's suggestion that we require the same information as OHRP's rule. We decline to revise the rule as requested by the comment. Unlike OHRP, we have never required IRBs to give us the names, educational background, and qualifications of all IRB members. Our rule does not include this information because our regulatory emphasis has been on the IRB's overall composition. Consequently, our final rule does not require such information about individual IRB members.

We have, however, revised § 56.106(b)(2) to replace ''chair person'' with ''chairperson.'' This change reflects the common spelling for this noun and does not alter the application or interpretation of § 56.106(b)(2). Additionally, we have revised § 56.106(b)(2) to require the phone number and electronic mail address for the IRB chairperson; this will enable us to communicate with the IRB chairperson quickly if such a need arises.

On our own initiative, we have revised § 56.106(b)(2) to delete the parenthetical of ''(if one exists)'' after ''the contact person's name'' and to require and the name, mailing address, phone number, facsimile number, and electronic mail address of the contact person providing the registration information. This information will enable us to communicate with the contact person if any questions arise regarding the IRB or its registration information, and the information now required is similar to that required for the contact person under OHRP's rule. We also have reorganized the provision to make it easier to understand what information is required.

(Comment 9) Proposed § 56.106(b)(3) would require IRBs to provide the ''number of active protocols (small, medium, or large) involving FDA-regulated products reviewed.'' The proposal explained that a ''small'' number of protocols is 1 to 25 protocols; ''medium'' is 26 to 499 protocols, and ''large'' is 500 protocols or more.

Several comments interpreted this provision in different ways or sought clarification as to its meaning. In brief:

- One comment asked us to define ''protocol'' because it said questions would arise regarding multi-site studies involving a single protocol.
- Another comment would redefine the numerical ranges so that ''small'' would be 1 to 99 protocols, ''medium'' would be 100 to 499 protocols, ''large'' would be 500 to 1,999 protocols, and ''very large,'' a new category, would be 2,000 protocols or more. The comment explained that a ''substantial number'' of organizations oversee thousands of protocols and that these organizations operate differently compared to those that review 500 protocols.
- Another comment expressed concern about the protocol numbers, stating that it was unclear how useful or accurate the data would be due to complexities in IRB review and ''protocol driven research activities,'' the level of IRB review (such as full IRB review or expedited review), and frequent or daily changes in protocol review numbers.

Similarly, another comment stated that protocols are neither uniform nor uniformly complex, so that protocol activity is not a reasonable basis for determining IRB activity. A third comment said that we should consider the protocol ranges to be only approximations of IRB workloads and use the information carefully and cautiously in evaluating or characterizing IRBs.

- Another comment disputed the need for protocol review information, arguing that compliance with regulatory requirements is an issue regardless of the number of protocols reviewed by an IRB.

(Response) The preamble to the proposed rule explained that information regarding the number of protocols reviewed would enable us to determine how active an IRB is and to assign our inspection resources based on IRB activity levels (see 69 FR 40556 at 40558). Our intent was not to get an exact or precise figure, and the proposal's use of ''small,'' ''medium,'' and ''large'' protocol ranges reflected that intent.

Consequently, we decline to revise the rule to define ''protocol'' in the final rule. *Webster's II—New Riverside University Dictionary* defines ''protocol,'' in relevant part, as ''the plan for a scientific experiment or treatment'' (see *Webster's II—New Riverside University Dictionary* at page 947 (1988)). Thus, in the comment's scenario, if an IRB conducts one review for a multi-site study, that single review could be considered as one ''protocol.'' If an IRB conducts separate reviews for individual study sites, then it conceivably could have reviewed multiple ''protocols'' notwithstanding the fact that the study plan remains essentially the same for all sites.

However, on our own initiative, we have amended § 56.106(b)(3) to define what the term ''active protocol'' means. The final rule defines ''active protocol'' as ''any protocol for which an IRB conducted an initial review or a continuing review at a convened

meeting or under an expedited review procedure during the preceding 12 months.'' We have made this change to be consistent with changes made by OHRP in its final rule.

With respect to the proposal's numerical ranges and their usefulness to us, we reiterate that our intent was to get a general—rather than a precise—sense of how active IRBs are and to assign our limited inspectional resources more efficiently and effectively. We recognize that there are different types of IRB review and that changes in an IRB's workload could make an IRB's protocol estimate outdated or obsolete at a later point in time. However, given the protocol ranges were created simply to give us an idea about an IRB's activity, we have revised the rule to eliminate the ''small,'' ''medium,'' and ''large'' ranges. Instead, the final rule requires an approximate number of active protocols reviewed, but we neither expect nor want IRBs to constantly change or update their protocol numbers whenever their protocol numbers fluctuate. If the approximate number of protocols changes after initial IRB registration, the IRB should report the new protocol number as part of the re-registration process which takes place every 3 years.

As for compliance activities, we believe the comment may have misinterpreted the preamble to the proposed rule. We did not state that we would base inspections solely on an IRB's self-reported level of ''small,'' ''medium,'' or ''large'' numbers of protocols reviewed. We simply said that the information would help us assign inspection resources based on IRB activity levels.

To put it another way, we have limited inspectional resources, and our field staffs that inspect IRBs are also responsible for many other types of inspections and activities. We must prioritize our routine IRB inspections in some manner to make the most efficient use of our resources. Such prioritization of IRB inspections is not tantamount to declaring, as the comment suggests, that IRBs reviewing ''small'' or ''medium'' numbers of protocols do not have to comply with FDA regulations or that we enforce our requirements differently depending on whether an IRB reviews a ''small,'' ''medium,'' or ''large'' number of protocols. Nevertheless, given that the final rule does not contain the ''small,'' ''medium,'' or ''large'' protocol ranges, the issue is largely moot.

(Comment 10) Proposed § 56.106(b)(4) would require IRBs to describe the types of FDA-regulated products, such as biological products, color additives, food additives, human drugs, or medical devices, involved in the protocols that they review.

Two comments addressed this provision. One comment stated that it had no objection to the requirement provided that the description could be simple or generic without numerical ranges associated with each product type. Another comment said the descriptions would be appropriate only if we used the information for purposes of sending useful and targeted information to IRBs. The comment also said that the description should be generic and without numerical ranges associated with product types.

(Response) We agree with the comments. Section 56.106(b)(4) merely seeks a generic description of the FDA-regulated products in the protocols reviewed by the IRB. So, for example, if the IRB reviews protocols for human drug studies, the description, to satisfy § 56.106(b)(4), could simply be ''human drugs.'' If the IRB reviews protocols for human drug and medical device studies, the description would be ''human drugs'' and ''medical devices.'' We also note that the electronic registration system will list the types of FDA-regulated products and allow individuals to check the appropriate boxes relating to those products and to check ''other'' and explain what the ''other'' FDA-regulated products are.

Furthermore, § 56.106(b)(4) does not require IRBs to assign numerical values to the FDA-regulated product types. As the comments noted, our intent is to use this information to send product-specific information to IRBs, and we can do so with a simple description of product types.

(Comment 11) Proposed § 56.106(b)(5) would require an indication whether the IRB is accredited and, if so, the date of the last accreditation and the name of the accrediting body or organization. The preamble to the proposed rule stated that we recognized that IRB accreditation is a developing concept and invited comment on ''the perceived value of collecting information on the accreditation status of IRBs'' (see 69 FR 40556 at 40558).

We received more than 10 comments on IRB accreditation issues, and the comments reflected a considerable difference of opinion regarding IRB accreditation and whether we should require information about such accreditation. In brief, the comments stated:

- IRB accreditation information may give FDA useful information in deciding which IRBs to inspect and may help us decide whether to focus educational activities on certain areas. One comment added that accreditation information would help us evaluate the value of IRB accreditation. In contrast, one comment said that IRB accreditation information will not give FDA new information that will be useful in assessing accreditation's value;
- FDA should refer to accreditation of human research protection programs rather than accreditation of IRBs;
- FDA should require information about the name of the accrediting organization under which the IRB functions or collect information about accreditation type or level. One comment explained that one body has two different accreditation categories;
- The additional reporting burden should not be passed on to the institution;
- FDA should delete the provision because accreditation information can be collected without the need for a regulation or is publicly available from accrediting organizations. One comment added that accreditation information, if it were part of the IRB registration requirement, might be unreliable because our rule would require re-registration every 3 years; and
- Accreditation does not accurately represent a measure of compliance with human subject protection requirements. Similarly, an IRB's lack of accreditation could be misconstrued as reflecting on the quality of the IRB's human subject protection program. In contrast, one comment strongly encouraged IRBs to become accredited, and another comment said that accreditation implies that a certain standard has been achieved.

(Response) The final rule omits accreditation information from the IRB registration requirements. We agree that, if necessary, we can obtain accreditation information from the accreditation organizations themselves and that the resulting information may be more reliable or accurate, given that the rule does not require certain registration information to be updated until re-registration. We also agree that, as a general matter, accreditation does not ensure or demonstrate that a particular action was done correctly; instead, accreditation may increase one's confidence that the accredited body is capable of performing a particular action correctly.

Furthermore, we continue to believe that accreditation, insofar as human subject protection is concerned, is still a developing concept. Consequently, we will continue to follow such accreditation activities, but will not require accreditation information as part of IRB registration.

Finally, because the final rule does not require accreditation information, the comment regarding reporting burdens is moot.

D. When Must an IRB Register? (Section 56.106(c))

Proposed § 56.106(c) would have IRBs register once and to renew their registrations every 3 years. Initial IRB registration would occur within 30 days before the date when the IRB intends to review clinical investigations regulated by FDA. IRB registration would become effective upon HHS posting of the registration information on its Web site.

(Comment 12) One comment would have us consider IRBs to be registered as soon as they complete submitting the registration information regardless of whether the IRB submitted the information electronically or in writing. Another comment suggested that the electronic registration system acknowledge or document that the IRB has registered. Another comment stated that, if IRB registration is to identify IRBs for future inspections, there is no need for a 30-day ''waiting'' period.

A different comment said that the 30-day time period might interfere with IRB review, particularly expedited reviews and full IRB reviews that take less than 30 days. The comment suggested that we revise the rule so that IRBs may not issue a determination on FDA-regulated research until they have registered.

Another comment asked us to clarify when IRBs must register. The comment explained that the codified provision directed IRBs to submit an initial registration within 30 days before the date when the IRB intends to review clinical investigations regulated by FDA. The comment said that the word ''within'' could mean that an IRB could register ''anytime between one and 30 days before reviewing a protocol,'' but that the preamble to the proposed rule interpreted proposed § 56.106(c) as requiring registration at least 30 days before reviewing the protocol. The comment preferred giving IRBs the ability to register any time between 1 and 30 days before reviewing protocols in FDA-regulated research.

(Response) We agree, in part, with the comments. For IRBs that register electronically, the registration system will notify them that they are registered. This notification will be sent to the electronic mail address that the IRB provides as part of the registration process. The IRB's registration will be effective after review and acceptance by HHS. We have amended § 56.106(c) regarding the time at which IRB registration becomes effective to correspond to changes made by OHRP in its final rule which is published elsewhere in this issue of the **Federal Register**. OHRP revised a comparable provision in its rule to clarify when IRB registration would become effective.

For IRBs that submit their registration information in writing, our experience with written forms in other contexts suggests that some individuals will not complete the forms or omit required information. As a result, we may need to contact individuals to obtain the missing information. Therefore, it would be more practical for us to consider IRBs who submit their registration information in writing to be registered only after they have submitted all required registration information, we have entered that information into the electronic registration system, and the information is reviewed and accepted by HHS.

As for the comments concerning the 30-day timeframe and the suggestion that we amend the rule so that IRBs cannot issue decisions on FDA-regulated research until they have registered, we have decided to eliminate the 30-day timeframe from the final rule. We note that IRB registration, alone, does not address issues regarding an IRB's competence or expertise, nor does it require IRBs to meet a particular standard in order to conduct a review. However, because it is important to FDA to assemble an accurate IRB database, we have revised § 56.106(c) to state that: ''Each IRB must submit an initial registration. The initial registration must occur before the IRB begins to review a clinical investigation described in paragraph (a) of this section. Each IRB must renew its registration every 3 years. IRB registration becomes effective after review and acceptance by HHS.''

(Comment 13) One comment would require IRBs to renew their registration every year instead of every 3 years. The comment said that 3 years would be too long a time period.

(Response) We decline to revise the rule as suggested by the comment. IRB registration does not confer any particular status on IRBs, nor does registration, alone, reflect upon an IRB's competence or capabilities. Moreover, given that the information we seek through IRB registration is quite basic (as in names and addresses) and that § 56.106(e) describes how and when IRBs are to revise their registration information, annual registration would not appear to confer any advantages or make registration information more accurate or reliable. Consequently, we decline to require IRBs to register annually.

E. Where Can an IRB Register? (Section 56.106(e))

Proposed § 56.106(e) would direct IRBs to register at a specific Internet address or, if an IRB lacked the ability to register electronically, to send its registration information to a specific mail address. We indicated that we would provide the Internet address and mail address in the final rule. We also invited comment on whether we should discontinue written IRB registration procedures after some time period has elapsed, because we did not know how widespread Internet access is among IRBs (see 69 FR 40556 at 40558).

(Comment 14) Several comments pertained to the registration site(s). One comment said we should maintain one common registration site with OHRP and that the registration system should automatically include currently registered IRBs. The comment said the registration system should also allow such IRBs to retain their assigned numbers. The comment acknowledged the intent to create a single registration site, but implied that the proposed rule's omission of a specific Internet address created concern. Another comment supported creation of a simple, electronic registration system.

(Response) We agree that a single Internet registration site should be used for electronic registrations and have always worked with OHRP towards that end. We were unable to provide a specific Internet address at the time of the proposed rule because the electronic registration system was still under development. The final rule now states that the Internet registration address is *http://ohrp.cit.nih.gov/efile*.

Additionally, as we stated in the preamble to the proposed rule, OHRP will continue to recognize previous IRB registrations (see 69 FR 40556 at 40558).

(Comment 15) One comment asked whether entities that have more than one IRB at the same location need to register more than once or whether they could register once and provide multiple pieces of information in connection with a single registration.

(Response) The electronic registration system will assign an organization number to each entity, and this will enable the entity to register several IRBs without having to enter the same data repeatedly for each IRB.

(Comment 16) Two comments encouraged us to have the electronic registration system consider IRBs to be registered automatically once an IRB completes the electronic registration process or to send acknowledgements to the IRBs once they complete the electronic registration process.

(Response) As we stated in our response to comment 12 of this document, when an IRB completes the electronic registration process and HHS has reviewed and accepted the information, the electronic registration system will notify IRBs that they are registered.

(Comment 17) Several comments responded to our question whether we should discontinue written IRB registrations after some time period has elapsed. One comment supported conversion to electronic registration as soon as possible, but said it is important to allow small organizations the time to acquire the necessary technology. The comment agreed that not all institutions have electronic capabilities or Internet access.

Another comment supported giving IRBs the option to submit registration information in writing for a predetermined period of time, but did not suggest any time period. A different comment also supported the written registration option, but suggested that it be available only for 2 years.

Another comment opposed discontinuing written IRB registration. The comment said that there are adverse consequences to both the IRB and any sponsor or investigator that might use an unregistered IRB (which appeared to be a reference to a later discussion, in the preamble to the proposed rule, about ''What Happens if an IRB Does Not Register?'' (see 69 FR 40556 at 40559)), so we should continue to make written IRB registration possible.

(Response) While we continue to believe that most IRBs will use the electronic registration system, we do not know how many IRBs will use the written registration option, and the administrative record for this rulemaking does not give us sufficient basis to set a deadline at which we would end the written registration option. (We realize that one comment suggested a 2-year period, but, given that IRBs have 3 years to renew registrations, discontinuing written registrations after 2 years would not give IRBs the opportunity to renew their registrations in writing.) Consequently, until we become more experienced with IRB registrations, we will continue to offer written registration as an alternative to electronic registration, and the final rule states that IRBs that lack the ability to register electronically must send their registration information, in writing, to the Good Clinical Practice Program (HF–34), Office of Science and Health Coordination, Food and Drug Administration, 5600 Fishers Lane, Rockville, MD 20857.

F. How Does an IRB Revise Its Registration Information? (Section 56.106(e))

Proposed § 56.106(e) would have IRBs revise their registration information within specific timeframes if certain changes occurred. For example, if the IRB's contact or chair person information changes, proposed § 56.106(e) would require the IRB to change its registration information within 90 days of the change. If the IRB decided to disband or to discontinue reviewing FDA-regulated clinical investigations, it would report that change within 30 days. All other information changes would be reported when the IRB renews its registration.

(Comment 18) Two comments pointed out a discrepancy between the proposed rule and its preamble. The comments noted that the preamble to the proposed rule said that if an IRB reviews new types of FDA-regulated products, it would revise its registration information within 30 days (see 69 FR 40556 at 40559), yet proposed § 56.106(e) was silent regarding such changes. The comments suggested that we reconcile the codified text with the preamble.

(Response) The comments were correct. We inadvertently omitted changes in the IRB's review of FDA-regulated research from proposed § 56.106(e), and we have revised the rule so that IRBs must revise their registration information within 30 days if they review new types of FDA-regulated products. Additionally, on our own initiative, we have added a parenthetical phrase to clarify that a decision to review ''new types of FDA-regulated products'' should be interpreted as a decision to review a different category of FDA-regulated products, such as a decision to review studies pertaining to food additives when the IRB previously reviewed studies pertaining to drug products. We do not want IRBs to revise their registration information if they decide to review studies pertaining to subcategories within the same class of FDA-regulated products; for example, if an IRB previously reviewed studies pertaining to drugs intended to treat cardiac conditions and then decided to review studies pertaining to drugs intended to treat cancer, both types of studies would still pertain to drug products, so there would be no ''new type'' of FDA-regulated product within § 56.106(e).

(Comment 19) One comment addressed IRBs that have decided to disband. The comment said that the process of closing an IRB may take longer than 30 days, so requiring IRBs to revise their registration information within 30 days of a decision to disband would put an ''undue burden'' on IRBs and the institutions responsible for the IRBs.

(Response) We agree in part, and disagree in part with the comment. We agree that, in some cases, closing an IRB may take more than 30 days, but, in other cases, the process may take less time. In other words, IRBs vary in size, resources, organization, and complexity, and, as a result, different IRBs will take different amounts of time to perform the same or similar functions.

The comment also may have misinterpreted the proposed rule. Proposed § 56.106(e) stated that an IRB's decision to disband or to discontinue reviewing FDA-regulated clinical investigations is a change that must be reported within 30 days of that change; thus, the proposal would begin the time period when IRB decides to close, not when the IRB finally closes. Nevertheless, for consistency with OHRP's final rule (which appears elsewhere in this issue of the **Federal Register**), we have revised § 56.106(e) to state that an IRB's decision to disband is a change that must be reported ''within 30 days of permanent cessation of the IRB's review of research.'' In the preamble to the OHRP final rule, OHRP states that ''the date of permanent cessation of the IRB's review of * * * research would occur on or after the IRB's decision to disband, but not before the IRB's decision to disband was made.''

Furthermore, given the simplicity of the electronic registration system, we do not believe that IRBs or their institutions will find it ''unduly'' burdensome to report the IRB's decision to disband.

(Comment 20) One comment would shorten the time period for reporting changes in the IRB's contact or chair person information from 90 days to 60 days.

(Response) We decline to revise the rule as suggested by the comment. The comment did not identify any advantage in shortening the timeframe, and we do not believe that reducing the timeframe by 30 days will confer any significant benefit.

G. What Other Comments Did We Receive?

1. What Information Will Be Publicly Available?

The preamble to the proposed rule referred to the OHRP proposal for information regarding public disclosure of IRB registration information, the Freedom of Information Act (FOIA), and

the Privacy Act of 1974 (see 69 FR 40556 at 40557). It also stated that, insofar as FDA's registration system was concerned, the name of the institution operating the IRB and the IRB's name will be publicly accessible, and all other IRB registration information would be subject to public disclosure under FOIA and our public information regulations at part 20 (21 CFR part 20) (see id.).

(Comment 21) One comment said that, in addition to the institution's name and the IRB's name, we should make the following information publicly available:

- The name, address, and telephone number of the IRB contact; and
- For accredited IRBs, information relating to that accreditation.

Another comment asked us to clarify what information would be publicly available under FOIA.

(Response) All registration information required under this rule will be subject to FOIA and any other applicable statutes and regulations pertaining to public disclosure. Please note that certain information may be withheld from public disclosure or may require an individual's consent to public disclosure (see, e.g., § 20.63(e) (stating that a request for all records relating to a specific individual will be denied as a clearly unwarranted invasion of personal privacy unless accompanied by the written consent of the individual named)).

As for accreditation information, accreditation status is not required under the final rule, so that information will not be publicly available from us or from OHRP.

(Comment 22) One comment suggested that sponsors and investigators have access to the IRB registration database. The comment said that sponsors and investigators currently have access to Federal-wide assurances data and suggested that, if sponsors and investigators could not have access to the IRB registration database, we or OHRP should issue a report of IRB registrations or issue certificates to individual IRBs.

(Response) OHRP currently posts all registered IRBs on its Web site, including the name and location of the organization operating the IRB(s) and the name and location of each IRB.

We decline to issue reports on IRB registration or certificates to show that an IRB is registered. As we stated in our response to comment 12 of this document, IRB registration, alone, does not address issues regarding an IRB's competence or expertise, nor does it require IRBs to meet a particular standard in order to conduct a review.

(Comment 23) One comment said we should establish a link to the publicly available IRB registration information from the portion of our own Web site that pertains to ''Good Clinical Practices in FDA-Regulated Clinical Trials,'' located at *http://www.fda.gov/oc/gcp/default.htm*.

(Response) We agree with the comment and have modified our Web site accordingly.

2. What Happens if an IRB Does Not Register?

The preamble to the proposed rule stated that sponsors and investigators who used unregistered IRBs might be using IRBs that ''would not have had the benefit of receiving educational materials from FDA and would not have been identified on an FDA IRB registration list for future inspection'' (see 69 FR 40556 at 40559). Thus, the preamble to the proposed rule added that, ''to the extent that any existing FDA regulation requires a sponsor or investigator to comply with [part 56] or to use an IRB that complies with part 56, FDA will consider sponsors and investigators using an unregistered IRB to be in conflict with their regulatory obligations'' (id.).

The preamble to the proposed rule also noted how we considered other options to require sponsors and investigators to use only registered IRBs, such as refusing to consider information from an application for a research permit for a clinical investigation that is reviewed or is to be reviewed by an unregistered IRB (id.). The preamble to the proposed rule also invited comment on what sanctions or administrative mechanisms, if any, should or might be used against sponsors and investigators who use unregistered IRBs and whether any additional changes to our regulations were necessary.

(Comment 24) We received many comments relating to sanctions, other regulatory changes, and ensuring that sponsors and investigators use only registered IRBs. The comments reflected a considerable difference of opinion. For example:

- One comment said we should impose and enforce ''high fines'' for failure to follow human subject protection regulations;
- Several comments said that the forms investigators currently use (Form FDA 1572) could be used to reinforce or otherwise highlight the need to use only registered IRBs, but the comments differed as to whether investigators should be subject to any sanctions if they use an unregistered IRB. For example, one comment said failure to use a registered IRB should be treated the same as any other breach of an investigator's responsibilities, but others said that IRBs, rather than sponsors or investigators, should be responsible for any failure to register. One comment also opposed placing an investigation on clinical hold because, the comment argued, clinical holds are appropriate when the rights and/or safety of human subjects are in jeopardy or other material, noncompliance concerns are evident; the comment said that failure to register does not mean improper oversight by the IRB or by the sponsor. Some comments argued that sponsors and investigators should not be obliged to monitor an IRB's registration status. In contrast, one comment would have us amend the investigational new drug (IND) application regulations to authorize us to place a study on clinical hold if the sponsor or investigator uses an unregistered IRB. The same comment suggested that we consider additional enforcement options, such as ''refusing to consider information from an application for a research permit for a clinical investigation that is reviewed or is to be reviewed by an unregistered IRB.''
- Several comments, mostly from pharmaceutical firms or trade associations, opposed any changes outside the IRB regulations. The comments, in general, felt that the existing IND regulations were sufficient and clear regarding a sponsor's or investigator's obligation to use IRBs that comply with part 56. Some comments said we should not expend resources on revising the IND regulations but should promote awareness of the IRB registration requirements instead. Another comment, from an association of medical colleges, also opposed revisions to the IND regulations, stating that clinical holds would be unworkable because, if an unregistered IRB had reviewed a clinical study and the clinical study had proceeded, retroactive review of the study would be impermissible. The comment said we should refuse to consider information from an application for a research permit that is reviewed or is to be reviewed by an unregistered IRB.
- One comment suggested a ''flexible'' approach whereby we would start by sending a certified letter to an unregistered IRB regarding its failure to register and include registration instructions. If the IRB remained unregistered, the comment suggested that we inspect the IRB. The comment said that this approach would allow us to take appropriate action against unregistered IRBs without ''unnecessarily penalizing'' sponsors and investigators who have attempted to

follow our regulations in good faith. Similarly, another comment advocated sending letters to IRBs or notices to sponsors rather than imposing sanctions.

• One comment agreed with us that an IRB's failure to register would not justify disqualification of the IRB under § 56.121 absent the extreme circumstances described in § 56.121(b)(1) (the IRB has refused or repeatedly failed to comply with regulatory requirements) or § 56.121(b)(2) (the noncompliance adversely affects the rights or welfare of the human subjects in a clinical investigation).

(Response) We agree in part and disagree in part with the comments. We agree that the existing IND regulations, as well as the IDE regulations, are sufficient and clear regarding a sponsor's or investigator's obligation to use IRBs that comply with part 56. We also agree that an IRB's failure to register, alone, should not lead to disqualification proceedings under § 56.121 absent extreme circumstances. We intend to educate IRBs, sponsors, and investigators about the IRB registration requirements and to encourage sponsors and investigators to use registered IRBs for the same reasons we stated in the preamble to the proposed rule.

Given the existing IND and IDE regulations and our intent to pursue educational efforts, we disagree with those comments that would have us impose fines or place clinical investigations on clinical hold if the sponsor or investigator used an unregistered IRB. We believe that it would be premature for us to consider the use of such sanctions before we and the regulated community have gained sufficient experience with the IRB registration program.

3. What Other Issues Did the Comments Raise?

Several comments addressed issues that were either not part of the rulemaking or not material to the proposed codified text.

(Comment 25) One comment disagreed with the preamble to the proposed rule when we stated that our knowledge about the identities and numbers of IRBs reviewing FDA-regulated clinical research is obsolete or incomplete (see 69 FR 40556 at 40557). The comment said that we require sponsors to identify IRBs and that, for 20 years, OHRP has maintained a list of IRBs that have filed assurances (under 45 CFR part 46). The comment said that such past practices were apparently sufficient for purposes of conducting inspections.

(Response) We disagree with the comment. As we stated in the preamble to the proposed rule, existing FDA regulations have required some, but not all, clinical investigators and sponsors to provide IRB names and addresses to us, and those regulatory requirements differ slightly (see 69 FR 40556 at 40557). Consequently, because of differences within our own regulations, we do not have a comprehensive list of IRBs that review FDA-regulated research. Additionally, because our pre-existing regulations do not require sponsors and investigators to revise or update IRB information if and when the IRB changes its address, contact person, or chair person, or even, in some cases, to provide addresses, contact information, or chair person information to us, the IRB information we do have is not as detailed as the information we seek under this rule.

As for institutions that have filed assurances with OHRP under 45 CFR part 46, the IRBs associated with such institutions are not necessarily identical to those that review FDA-regulated research. OHRP's regulations apply to institutions that are engaged in human subjects research conducted or supported by HHS. In contrast, our IRB regulations apply to clinical investigations regulated by us, regardless of whether those investigations are conducted or supported by HHS. Thus, the fact that OHRP has operated an assurance system for decades does not necessarily mean that the OHRP list of institutions that have filed assurances can serve as a list of IRBs that review FDA-regulated research.

(Comment 26) One comment said that registration and re-registration fees should be set at $5,000 to cover costs. The comment said that taxpayers should not have to pay the fees or fund the costs of ''profiteers,'' and that pharmaceutical companies should not ''get away'' with low fees when ''they can pay their executives $150,000,000 at retirement.''

(Response) We decline to revise the rule as suggested by the comment. We have no express authority to impose registration or re-registration fees on IRBs. Additionally, the rule is directed at IRBs themselves rather than pharmaceutical firms, so issues relating to pharmaceutical executives' salaries are not relevant to this rulemaking.

(Comment 27) One comment asked us to confirm that our IRB inspections will adhere to the guidelines described in the ''Guidance for Institutional Review Boards and Clinical Investigators.''

(Response) This rulemaking does not affect how we conduct IRB inspections. We may, however, use IRB registration information to help us prioritize inspections. Additionally, our receipt of more accurate IRB addresses and contact information due to IRB registration should make it easier and more efficient to schedule IRB inspections.

H. What Other Amendment Did We Propose?

The proposal would also make a non-substantive amendment to part 56. The proposal would revise the definition of ''An Application for an Investigational Device Exemption,'' at § 56.102(b)(12), to eliminate its reference to 21 CFR part 813. The preamble to the proposed rule explained that this change is necessary because we removed the regulations at part 813 (which had pertained to intraocular lenses) in 1997 (see 62 FR 4164, January 29, 1997).

We received no comments on this aspect of the proposal. Consequently, the final rule deletes a reference to part 813.

III. Implementation

This rule is effective July 14, 2009. This protracted effective date is necessary to allow refinement of the electronic registration system so that it corresponds to this final rule and to OHRP's final rule.

IV. Legal Authority

In general, the act authorizes us to issue regulations pertaining to investigational uses of FDA-regulated products (see, e.g., sections 409(j) (21 U.S.C. 348(j)) (investigations involving food additives); 505(i) (investigations involving human drugs); 520(g) (investigations involving devices); and 721(f) (21 U.S.C. 379e(f)) of the act (investigations involving color additives)).

The act also requires the submission of a petition or application to FDA (see, e.g., sections 409(b) (food additive petitions); 505(b) (new drug applications); 505(j) (abbreviated new drug applications); 513(f) (premarket notification for devices); 515(c) (premarket approval applications for devices); 520(m) (humanitarian device exemption applications); and 721(b) of the act (color additive petitions)) before marketing begins.

To implement these provisions of the act, section 701(a) of the act gives us the authority to issue regulations for the efficient enforcement of the act. By requiring IRB registration, the final rule will aid in the efficient enforcement of the act's provisions regarding the

investigational use of various FDA-regulated products (because then we would be able to conduct IRB inspections more efficiently) as well as those provisions regarding marketing applications (because marketing applications usually depend on clinical investigations involving human subjects, and IRBs are supposed to provide protections for the rights and welfare of such human subjects). Moreover, by requiring IRBs to register, the final rule will enable FDA to contact IRBs more quickly and efficiently on various issues, such as adverse reactions that may be attributed to a particular product, new regulatory requirements or policies, or problems associated with a particular protocol or clinical investigator. Consequently, we conclude that we have sufficient legal authority to issue the final rule.

V. Economic Impact Analysis

We have examined the impacts of the final rule under Executive Order 12866, the Regulatory Flexibility Act (5 U.S.C. 601–612), and the Unfunded Mandates Reform Act of 1995 (Public Law 104–4). Executive Order 12866 directs agencies to assess all costs and benefits of available regulatory alternatives and, when regulation is necessary, to select regulatory approaches that maximize net benefits (including potential economic, environmental, public health and safety, and other advantages; distributive impacts; and equity). The agency believes that this final rule is not a significant regulatory action as defined by the Executive Order.

The Regulatory Flexibility Act requires agencies to analyze regulatory options that would minimize any significant impact of a rule on small entities. Because the required registration information is minimal and the costs associated with registration are low, the agency certifies that the final rule will not have a significant economic impact on a substantial number of small entities.

Section 202(a) of the Unfunded Mandates Reform Act of 1995 requires that agencies prepare a written statement, which includes an assessment of anticipated costs and benefits, before proposing ''any rule that includes any Federal mandate that may result in the expenditure by State, local, and tribal governments, in the aggregate, or by the private sector, of $100,000,000 or more (adjusted annually for inflation) in any one year.'' The current threshold after adjustment for inflation is $127 million, using the most current (2006) Implicit Price Deflator for the Gross Domestic Product. FDA does not expect this final rule to result in any 1-year expenditure that would meet or exceed this amount.

The final rule requires most IRBs to register with FDA. The information sought through the registration process is minimal, consisting largely of names and addresses for a contact person, the institution operating the IRB (if an institution exists), the head of the institution, the IRB, and the IRB chairperson. The registration would also indicate the approximate number of active protocols reviewed and the types of FDA-regulated products involved. We estimate that initial IRB registration may require 1 hour. The average loaded wage rate for administrators at public institutions is about $44 per hour.[1] This means that each IRB would spend $44 for an initial registration ($44 per hour x 1 hour per initial registration).

We estimate that re-registration would require less time, especially if the IRB verifies existing information. If re-registration requires 30 minutes, then the cost of re-registration to each IRB would be approximately $22 ($44 per hour x 0.5 hours per re-registration).

Revising an IRB's registration information would probably involve costs similar to re-registration costs. If the revision requires 30 minutes, then the cost of revising an IRB's registration information would be approximately $22 per IRB.

Given the minimal registration information that would be required and the low costs associated with registration, this final rule is not a significant regulatory action, and we certify that the final rule does not have a significant economic impact on a substantial number of small entities. Therefore, the rule is not a ''significant regulatory action'' under Executive Order 12866 and does not require a Regulatory Flexibility Act analysis.

Additionally, assuming that an estimated 5,000 IRBs would register, the final rule will result in a 1-year expenditure of $220,000 (5,000 IRBs x $44 registration wage costs per IRB). Because the total expenditure under the rule will not result in a 1-year expenditure of $100 million or more, we are not required to perform a cost-benefit analysis under the Unfunded Mandates Reform Act.

VI. Environmental Impact

We have determined under 21 CFR 25.30(h) that this action is of a type that does not individually or cumulatively have a significant effect on the human environment. Therefore, neither an environmental assessment nor an environmental impact statement is required.

VII. Paperwork Reduction Act of 1990

This rule contains information collection requirements that are subject to review by the Office of Management and Budget (OMB) under the Paperwork Reduction Act of 1995 (PRA) (44 U.S.C. 3501–3520). The title, description, and respondent description of the information collection provisions are shown below with an estimate of the annual reporting and recordkeeping burden. Included in the estimate is the time for reviewing instructions, searching existing data sources, gathering and maintaining the data needed, and completing and reviewing each collection of information.

Title: Institutional Review Boards: Registration Requirements.

Description: The final rule requires IRBs to register with FDA.

Description of Respondents: Businesses and individuals.

The estimated burden associated with the information collection requirements of this rule is 8,750 hours.

We estimate the burden of this collection of information as follows:

TABLE 1.—ESTIMATED ANNUAL REPORTING BURDEN[1]

21 CFR Section	No. of Respondents	Annual Frequency per Response	Total Annual Responses	Hours per Response	Total Hours
56.106(c) (initial registration)	5,000	1	5,000	1	5,000
56.106(c) (re-registration)	2,500	1	2,500	0.5	1,250

[1] Source: United States Department of Labor, Bureau of Labor Statistics; National Compensation Survey, June 2005. Overall hourly rate in the United States for administrators and officials, public administration, is $31.54. To account for benefits, the hourly rate was increased by 40 percent and rounded to the nearest whole dollar. Data accessed on August 31, 2006, at *http://data.bls.gov*.

TABLE 1.—ESTIMATED ANNUAL REPORTING BURDEN[1]—Continued

21 CFR Section	No. of Respondents	Annual Frequency per Response	Total Annual Responses	Hours per Response	Total Hours
56.106(e)	5,000	1	5,000	0.5	2,500
Total					8,750

[1] There are no capital costs or operating and maintenance costs associated with this collection of information.

Our estimates are based on the following considerations. According to a 1998 OIG report, there are 3,000 to 5,000 IRBs in the United States, and most are associated with hospitals and academic centers (see Department of Health and Human Services, Office of the Inspector General, *Institutional Review Boards: A Time for Reform*, page 3, June 8, 1998). While not all IRBs are involved in clinical investigations regulated by FDA, for purposes of the PRA, we will use 5,000 as the maximum number of IRBs subject to the final rule. Additionally, because the final rule requires basic information about an IRB (such as names and addresses) and because registration would, in most cases, be done electronically, we will assume that registration will take only 1 hour per IRB. Thus, the total burden hours would be 5,000 hours (5,000 IRBs x 1 hour per IRB).

Re-registration and revisions to existing registration information should require less time than initial registration. We will assume that re-registration and revisions will take only 30 minutes per IRB. We will also assume, based on OHRP's experience with its IRB registration program, that 50 percent of IRBs (2,500) will re-register and that all (5,000) will revise their registration information. Therefore, the total burden hours for re-registration will be 1,250 hours (2,500 IRBs x 0.5 hours per IRB), and the total burden hours for revisions will be 2,500 hours (5,000 IRBs x 0.5 hours per IRB).

Prior to the effective date of this final rule, FDA will publish a notice in the **Federal Register** announcing OMB's decision to approve, modify, or disapprove the information collection provisions in this final rule. In compliance with the PRA (44 U.S.C. 3507(d)), we have submitted the information collection requirements of this rule to OMB for review. An agency may not conduct or sponsor, and a person is not required to respond to, a collection of information unless it displays a currently valid OMB control number.

VIII. Federalism

We have analyzed this final rule in accordance with the principles set forth in Executive Order 13132. We have determined that the rule does not contain policies that have substantial direct effects on the States, on the relationship between the National Government and the States, or on the distribution of power and responsibilities among the various levels of government. Accordingly, we have concluded that the rule does not contain policies that have federalism implications as defined in the order and, consequently, a federalism summary impact statement isnot required.

List of Subjects in 21 CFR Part 56

Human research subjects, Reporting and recordkeeping requirements, Safety.

■ Therefore, under the Federal Food, Drug, and Cosmetic Act and under authority delegated to the Commissioner, part 56 is amended as follows:

PART 56—INSTITUTIONAL REVIEW BOARDS

■ 1. The authority citation for 21 CFR part 10 continues to read as follows:

Authority: 21 U.S.C. 321, 343, 346, 346a, 348, 350a, 350b, 351, 352, 353, 355, 360, 360c–360f, 360h–360j, 371, 379e, 381; 42 U.S.C. 216, 241, 262, 263b–263n.

§ 56.102 [Amended]

■ 2. Amend § 56.102 in paragraph (b)(12) by removing the phrase ''parts 812 and 813'' and by adding in its place the phrase ''part 812''.

■ 3. Add § 56.106 to subpart A to read as follows:

§ 56.106 Registration.

(a) *Who must register*? Each IRB in the United States that reviews clinical investigations regulated by FDA under sections 505(i) or 520(g) of the act and each IRB in the United States that reviews clinical investigations that are intended to support applications for research or marketing permits for FDA-regulated products must register at a site maintained by the Department of Health and Human Services (HHS). (A research permit under section 505(i) of the act is usually known as an investigational new drug application (IND), while a research permit under section 520(g) of the act is usually known as an investigational device exemption (IDE).) An individual authorized to act on the IRB's behalf must submit the registration information. All other IRBs may register voluntarily.

(b) *What information must an IRB register*? Each IRB must provide the following information:

(1) The name, mailing address, and street address (if different from the mailing address) of the institution operating the IRB and the name, mailing address, phone number, facsimile number, and electronic mail address of the senior officer of that institution who is responsible for overseeing activities performed by the IRB;

(2) The IRB's name, mailing address, street address (if different from the mailing address), phone number, facsimile number, and electronic mail address; each IRB chairperson's name, phone number, and electronic mail address; and the name, mailing address, phone number, facsimile number, and electronic mail address of the contact person providing the registration information.

(3) The approximate number of active protocols involving FDA-regulated products reviewed. For purposes of this rule, an ''active protocol'' is any protocol for which an IRB conducted an initial review or a continuing review at a convened meeting or under an expedited review procedure during the preceding 12 months; and

(4) A description of the types of FDA-regulated products (such as biological products, color additives, food additives, human drugs, or medical devices) involved in the protocols that the IRB reviews.

(c) *When must an IRB register*? Each IRB must submit an initial registration. The initial registration must occur before the IRB begins to review a clinical investigation described in paragraph (a) of this section. Each IRB must renew its registration every 3 years. IRB registration becomes effective after review and acceptance by HHS.

(d) *Where can an IRB register*? Each IRB may register electronically through *http://ohrp.cit.nih.gov/efile*. If an IRB lacks the ability to register electronically, it must send its

registration information, in writing, to the Good Clinical Practice Program (HF–34), Office of Science and Health Coordination, Food and Drug Administration, 5600 Fishers Lane, Rockville, MD 20857.

(e) *How does an IRB revise its registration information*? If an IRB's contact or chair person information changes, the IRB must revise its registration information by submitting any changes in that information within 90 days of the change. An IRB's decision to review new types of FDA-regulated products (such as a decision to review studies pertaining to food additives whereas the IRB previously reviewed studies pertaining to drug products), or to discontinue reviewing clinical investigations regulated by FDA is a change that must be reported within 30 days of the change. An IRB's decision to disband is a change that must be reported within 30 days of permanent cessation of the IRB's review of research. All other information changes may be reported when the IRB renews its registration. The revised information must be sent to FDA either electronically or in writing in accordance with paragraph (d) of this section.

Dated: January 7, 2009.

Jeffrey Shuren,

Associate Commissioner for Policy and Planning.

[FR Doc. E9–682 Filed 1–14–09; 8:45 am]

BILLING CODE 4160–01–S

DEPARTMENT OF STATE

22 CFR Part 42

[Public Notice: 6457]

RIN 1400–AB84

Visas: Documentation of Immigrants Under the Immigration and Nationality Act, as Amended: Electronic Petition for Diversity Immigrant Status

AGENCY: State Department.

ACTION: Final rule.

SUMMARY: This rule makes final an interim rule published in the **Federal Register** on August 18, 2003, amending the Department's regulations pertaining to the manner in which aliens may petition for the opportunity to participate in the Diversity Visa Program. The rule changed the standard mail-in system previously used to an entirely electronic system for the purpose of making the process less prone to fraud, improve efficiency and significantly reduce the processing costs to the Government.

DATES: *Effective Date:* This rule is effective on January 15, 2009.

FOR FURTHER INFORMATION CONTACT: Lauren Prosnik, Legislation and Regulations Division, Visa Services, Department of State, Washington, DC 20520–0106, (202) 663–1202, e-mail (*prosnikla@state.gov*).

SUPPLEMENTARY INFORMATION:

Why is the Department promulgating this rule?

The Department published an interim rule, Public Notice 4446 at 68 FR 49353, Aug. 18, 2003, with a request for comments. The comment period expired on October 17, 2003. No public comments were received during the comment period.

What did the rule do?

The rule amended the Department's regulations at 22 CFR 42.33 to establish an entirely electronic system utilizing a specifically designated Internet Web site, by which aliens can petition for the opportunity to participate in the Diversity Visa Program.

Why was the petitioning process changed?

There are three main benefits to changing the mail-in process to an electronic format. First, it helps eliminate multiple applications, prohibited under INA Section 204(a)(1)(I). Secondly, it greatly reduces the cost of administering the system. Finally, it benefits the petitioners by immediately notifying them of the receipt of the petition, impossible under the mail-in system.

PART 42—VISAS: DOCUMENTATION OF IMMIGRANTS UNDER THE IMMIGRATION AND NATIONALITY ACT, AS AMENDED

■ Accordingly, the interim rule amending 22 CFR part 42 which was published at 68 FR 49353 on August 18, 2003, is adopted as final without change.

Dated: January 2, 2009.

Janice L. Jacobs,

Assistant Secretary for Consular Affairs, Department of State.

[FR Doc. E9–698 Filed 1–14–09; 8:45 am]

BILLING CODE 4710–06–P

DEPARTMENT OF HOUSING AND URBAN DEVELOPMENT

24 CFR Parts 203 and 3500

[Docket No. FR–5180–F–04]

RIN 2502–AI61

Real Estate Settlement Procedures Act (RESPA): Rule To Simplify and Improve the Process of Obtaining Mortgages and Reduce Consumer Settlement Costs; Deferred Applicability Date for the Revised Definition of ''Required Use''

AGENCY: Office of the Assistant Secretary for Housing-Federal Housing Commissioner, HUD.

ACTION: Final rule.

SUMMARY: This final rule delays the effective date of the definition of ''required use'' as revised by HUD's November 17, 2008, final rule amending its RESPA regulations. The November 17, 2008, final rule provides that the revised definition is applicable commencing January 16, 2009, the effective date of the final rule. As a result of recently initiated litigation, HUD has determined to delay the effective date of the revised definition of ''Required use'' until April 16, 2009.

DATES: This correction is effective January 16, 2009, The definition of ''*Required use*'' in § 3500.2, as revised by HUD's final rule published on November 17, 2008, at 73 FR 68204, is delayed until April 16, 2009.

FOR FURTHER INFORMATION CONTACT: Ivy Jackson, Director, or Barton Shapiro, Deputy Director, Office of RESPA and Interstate Land Sales, Office of Housing, Department of Housing and Urban Development, 451 7th Street, SW., Room 9158, Washington, DC 20410–8000; telephone 202–708–0502 (this is not a toll-free telephone number). Persons with hearing or speech impairments may access this number through TTY by calling the toll-free Federal Information Relay Service at 800–877–8339.

SUPPLEMENTARY INFORMATION: On November 17, 2008 (73 FR 68204), HUD published a final rule amending its regulations to further the purposes of the Real Estate Settlement Procedures Act (12 U.S.C. 2601–2617) by requiring more timely and effective disclosures related to mortgage settlement costs for federally related mortgage loans to consumers. The final rule followed publication of a March 14, 2008, proposed rule (73 FR 14030) and made changes in response to public comment and in further consideration of certain issues by HUD. Additional information

regarding the regulatory amendments, and the changes made by HUD at the final rule stage, is provided in the preamble to the November 17, 2008, final rule.

The effective date of the November 17, 2008, final rule is January 16, 2009. However, the final rule provides for an appropriate transition period for certain requirements. Other provisions are to be implemented upon the effective date of the final rule.

Among those regulatory changes to be implemented upon the effective date of January 16, 2009, is the revised definition of the term ''*Required use.*'' This amendment has become the subject of recently initiated litigation. (*National Association of Home Builders, et al.* v. *Steve Preston, et al.,* Civ. Action No. 08–CV–1324, United States District Court for the Eastern District of Virginia, Alexandria Division.) For reasons related to the proper litigation of this case, HUD is issuing this final rule to delay the effective date of the revised definition of ''*Required use*'' for an additional 90 days until April 16, 2009.

In general, HUD publishes a rule for public comment before issuing a rule for effect, in accordance with its own regulations on rulemaking at 24 CFR part 10. Part 10, however, does provide in § 10.1 for exceptions from that general rule where HUD finds good cause to omit advance notice and public participation. The Department finds that good cause exists to publish this final rule for effect without first soliciting public comment as public comment is impracticable, given the litigation schedule established by the court.

■ Accordingly, HUD's final rule published on November 17, 2008 at 73 FR 68204 (Docket No. FR 5180–F–03, FR Doc. E8–27070) is corrected as follows:

■ 1. On page 68239, beginning in the first column, § 3500.1(b)(1) is corrected to read as follows:

§ 3500.1 Designation and applicability.

* * * * *

(b) * * *

(1) The definition of *Required use* in § 3500.2 is applicable commencing on April 16, 2009; §§ 3500.8(b), 3500.17, 3500.21, 3500.22 and 3500.23, and Appendices E and MS–1 are applicable commencing January 16, 2009.

* * * * *

Dated: January 9, 2009.

Brian D. Montgomery,

Assistant Secretary for Housing-Federal Housing Commissioner.

[FR Doc. E9–852 Filed 1–14–09; 8:45 am]

BILLING CODE 4210–67–P

DEPARTMENT OF THE TREASURY

Internal Revenue Service

26 CFR Part 301

[TD 9443]

RIN 1545–BG16

Postponement of Certain Tax-Related Deadlines by Reason of a Federally Declared Disaster or Terroristic or Military Action

AGENCY: Internal Revenue Service (IRS), Treasury.

ACTION: Final regulation.

SUMMARY: This document contains final regulations relating to postponement of certain tax-related deadlines either due to service in a combat zone or due to a federally declared disaster. The regulations reflect changes in the law made by the Victims of Terrorism Tax Relief Act of 2001, the Tax Extenders and Alternative Minimum Tax Relief Act of 2008 (TEAMTRA), and current IRS practice. The regulations affect taxpayers serving in a combat zone and taxpayers affected by a federally declared disaster.

DATES: *Effective Date:* These regulations are effective on January 15, 2009.

Applicability Dates: For dates of applicability, *see* § 301.7508A–1(g).

FOR FURTHER INFORMATION CONTACT: Mary Ellen Keys, (202) 622–4570 (not a toll-free number).

SUPPLEMENTARY INFORMATION:

Background

This document contains amendments to the Procedure and Administration Regulations (26 CFR part 301). Section 7508A of the Internal Revenue Code (Code) relates to the postponement of certain tax-related acts by reason of a federally declared disaster or terroristic or military action. Section 7508A was added by section 911(a) of the Taxpayer Relief Act of 1997, Public Law 105–34 (111 Stat. 788, 877–78 (1997)) (the 1997 Act), which was effective for any period for performing an act that had not expired before December 5, 1997.

A notice of proposed rulemaking (REG–142680–06) was published in the **Federal Register** (73 FR 40471–01) on July 15, 2008. No comments were received from the public in response to the notice of proposed rulemaking, and no public hearing was requested or held. In this Treasury decision, the proposed regulations are adopted as revised.

Explanation of Revisions

Section 301.7508A–1 of these final regulations is revised throughout to use the term ''federally declared disaster'' instead of the term ''Presidentially declared disaster'' when referring to any disaster determined by the President of the United States to warrant assistance by the Federal Government under the Robert T. Stafford Disaster Relief and Emergency Assistance Act, 42 U.S.C. 5121, *et seq.* (the ''Stafford Act''). Prior versions of these regulations and the proposed regulations included the term ''Presidentially declared disaster'' as defined in former Code section 1033(h)(3). Sec. 706(a) of TEAMTRA, Div. C of Public Law 110–343 (122 Stat. 3765, 3920), amended Code section 1033(h)(3) by replacing the term ''Presidentially declared disaster'' with ''federally declared disaster'' and providing that the term shall have the meaning given such term by section 165(h)(3)(C). Section 165(h)(3)(C), added by section 706(a) of TEAMTRA, defines the term ''federally declared disaster'' to mean any disaster subsequently determined by the President of the United States to warrant assistance by the Federal Government under the Stafford Act. This definition is substantially the same as the definition of ''Presidentially declared disaster'' under former section 1033(h)(C). Thus, these statutory changes in terminology do not materially impact the meaning of either the proposed or final regulations.

Section 301.7508A–1(d)(1) of the final regulations is revised to expand the definition of ''affected taxpayer'' to include any individual, business entity, or sole proprietorship not located in a covered disaster area, but whose records necessary to meet a deadline for an act specified in paragraph (c) of § 301.7508A–1 are located in the covered disaster area. Section 301.7508A–1(d)(1) of the final regulations further expands the definition of *affected taxpayer* to include any individual visiting the covered disaster area who was killed or injured as a result of the disaster. These changes reflect current IRS practice of broadly defining the term ''affected taxpayer.''

Section 301.7508A–1(f) of the final regulations is revised to include a new *Example 9. Example 9,* which reflects current IRS practice, explains the impact of disaster relief on installment agreement payments that become due during the postponement period. *Example 9* explains that the affected taxpayer's obligation to make installment agreement payments is suspended during the postponement period. *Example 9* further explains that, because installment agreement payments pertain to pre-existing tax liabilities, interest and penalties

continue to accrue during the postponement period.

Special Analyses

It has been determined that these final regulations are not a significant regulatory action as defined in Executive Order 12866. Therefore, a regulatory assessment is not required. It has been determined that section 553(b) of the Administrative Procedure Act (5 U.S.C. chapter 5) does not apply to these regulations. The regulations do not impose a collection of information requirement on small business entities, thus the Regulatory Flexibility Act (5 U.S.C. chapter 6) does not apply. Pursuant to section 7805(f) of the Code, the notice of proposed rulemaking preceding these regulations was submitted to the Chief Counsel for Advocacy of the Small Business Administration for comment on its impact on small business.

Drafting Information

The principal author of these final regulations is Mary Ellen Keys of the Office of the Associate Chief Counsel (Procedure and Administration).

List of Subjects in 26 CFR Part 301

Employment taxes, Estate taxes, Excise taxes, Gift taxes, Income taxes, Penalties, Reporting and recordkeeping requirements.

Adoption of Amendments to the Regulations

■ Accordingly, 26 CFR part 301 is amended as follows:

PART 301—PROCEDURE AND ADMINISTRATION

■ **Paragraph 1.** The authority citation for part 301 continues to read in part as follows:

Authority: 26 U.S.C. 7805 * * *

■ **Par. 2.** Section 301.7508A–1 is amended by:

■ 1. Revising the section heading and paragraphs (b), (d)(1)(vii), (d)(2), and (e).

■ 2. Adding paragraphs (d)(1)(viii) and (d)(1)(ix), and (d)(3).

■ 3. Removing paragraph (f), redesignating paragraphs (g) and (h) as paragraphs (f) and (g), respectively, and revising them.

The revisions and additions read as follows:

§ 301.7508A–1 Postponement of certain tax-related deadlines by reasons of a federally declared disaster or terroristic or military action.

* * * * *

(b) *Postponed deadlines*—(1) *In general.* In the case of a taxpayer determined by the Secretary to be affected by a federally declared disaster (as defined in section 1033(h)(3)) or a terroristic or military action (as defined in section 692(c)(2)), the Secretary may specify a postponement period (as defined in paragraph (d)(1) of this section) of up to one year that may be disregarded in determining under the internal revenue laws, in respect of any tax liability of the affected taxpayer (as defined in paragraph (d)(1) of this section)—

(i) Whether any or all of the acts described in paragraph (c) of this section were performed within the time prescribed;

(ii) The amount of interest, penalty, additional amount, or addition to the tax; and

(iii) The amount of credit or refund.

(2) *Effect of postponement period.* When an affected taxpayer is required to perform a tax-related act by a due date that falls within the postponement period, the affected taxpayer is eligible for postponement of time to perform the act until the last day of the period. The affected taxpayer is eligible for relief from interest, penalties, additional amounts, or additions to tax during the postponement period.

(3) *Interaction between postponement period and extensions of time to file or pay*—(i) *In general.* The postponement period under section 7508A runs concurrently with extensions of time to file and pay, if any, under other sections of the Internal Revenue Code.

(ii) *Original due date prior to, but extended due date within, the postponement period.* When the original due date precedes the first day of the postponement period and the extended due date falls within the postponement period, the following rules apply. If an affected taxpayer received an extension of time to file, filing will be timely on or before the last day of the postponement period, and the taxpayer is eligible for relief from penalties or additions to tax related to the failure to file during the postponement period. Similarly, if an affected taxpayer received an extension of time to pay, payment will be timely on or before the last day of the postponement period, and the taxpayer is eligible for relief from interest, penalties, additions to tax, or additional amounts related to the failure to pay during the postponement period.

(4) *Due date not extended.* The postponement of the deadline of a tax-related act does not extend the due date for the act, but merely allows the IRS to disregard a time period of up to one year for performance of the act. To the extent that other statutes may rely on the date a return is due to be filed, the postponement period will not change the due date of the return.

(5) *Additional relief.* The rules of this paragraph (b) demonstrate how the IRS generally implements section 7508A. The IRS may determine, however, that additional relief to taxpayers is appropriate and may provide additional relief to the extent allowed under section 7508A. To the extent that the IRS grants additional relief, the IRS will provide specific guidance on the scope of relief in the manner provided in paragraph (e) of this section.

* * * * *

(d) * * *

(1) * * *

(vii) Any individual, business entity, or sole proprietorship not located in a covered disaster area, but whose records necessary to meet a deadline for an act specified in paragraph (c) of this section are located in the covered disaster area;

(viii) Any individual visiting the covered disaster area who was killed or injured as a result of the disaster; or

(ix) Any other person determined by the IRS to be affected by a federally declared disaster (within the meaning of section 1033(h)(3)).

(2) *Covered disaster area* means an area of a federally declared disaster (within the meaning of section 1033(h)(3)) to which the IRS has determined paragraph (b) of this section applies.

(3) *Postponement period* means the period of time (up to one year) that the IRS postpones deadlines for performing tax-related acts under section 7508A.

(e) *Notice of postponement of certain acts.* If a tax-related deadline is postponed under section 7508A and this section, the IRS will publish a revenue ruling, revenue procedure, notice, announcement, news release, or other guidance (see § 601.601(d)(2) of this chapter) describing the acts postponed, the postponement period, and the location of the covered disaster area. Guidance under this paragraph (e) will be published as soon as practicable after the occurrence of a terroristic or military action or declaration of a federally declared disaster.

(f) *Examples.* The rules of this section are illustrated by the following examples:

Example 1. (i) Corporation X, a calendar year taxpayer, has its principal place of business in County M in State W. Pursuant to a timely filed request for extension of time to file, Corporation X's 2008 Form 1120, ''U.S. Corporation Income Tax Return,'' is due on September 15, 2009. Also due on September 15, 2009, is Corporation X's third quarter estimated tax payment for 2009. Corporation X's 2009 third quarter Form 720,

''Quarterly Federal Excise Tax Return,'' and third quarter Form 941, ''Employer's Quarterly Federal Tax Return,'' are due on October 31, 2009. In addition, Corporation X has an employment tax deposit due on September 15, 2009.

(ii) On September 1, 2009, a hurricane strikes County M in State W. On September 7, 2009, certain counties in State W (including County M) are determined to be disaster areas within the meaning of section 1033(h)(3) that are eligible for assistance by the Federal government under the Stafford Act. Also on September 7, 2009, the IRS determines that County M in State W is a covered disaster area and publishes guidance announcing that the time period for affected taxpayers to file returns, pay taxes, and perform other time-sensitive acts falling on or after September 1, 2009, and on or before November 30, 2009, has been postponed to November 30, 2009, pursuant to section 7508A.

(iii) Because Corporation X's principal place of business is in County M, Corporation X is an affected taxpayer. Accordingly, Corporation X's 2008 Form 1120 will be timely if filed on or before November 30, 2009. Corporation X's 2009 third quarter estimated tax payment will be timely if made on or before November 30, 2009. In addition, pursuant to paragraph (c) of this section, Corporation X's 2009 third quarter Form 720 and third quarter Form 941 will be timely if filed on or before November 30, 2009. However, because deposits of taxes are excluded from the scope of paragraph (c) of this section, Corporation X's employment tax deposit is due on September 15, 2009. In addition, Corporation X's deposits relating to the third quarter Form 720 are not postponed. Absent reasonable cause, Corporation X is subject to the failure to deposit penalty under section 6656 and accrual of interest.

Example 2. The facts are the same as in *Example 1,* except that because of the severity of the hurricane, the IRS determines that postponement of government acts is necessary. During 2009, Corporation X's 2005 Form 1120 is being examined by the IRS. Pursuant to a timely filed request for extension of time to file, Corporation X timely filed its 2005 Form 1120 on September 15, 2006. Without application of this section, the statute of limitation on assessment for the 2005 income tax year will expire on September 15, 2009. However, pursuant to paragraph (c) of this section, assessment of tax is one of the government acts for which up to one year may be disregarded. Because September 15, 2009, falls within the period in which government acts are postponed, the statute of limitation on assessment for Corporation X's 2005 income tax will expire on November 30, 2009. Because Corporation X did not timely file an extension of time to pay, payment of its 2005 income tax was due on March 15, 2006. As such, Corporation X will be subject to the failure to pay penalty and related interest beginning on March 15, 2006. The due date for payment of Corporation X's 2005 income tax preceded the postponement period. Therefore, Corporation X is not entitled to the suspension of interest or penalties during the disaster period with respect to its 2005 income tax liability.

Example 3. The facts are the same as in *Example 2*, except that the examination of the 2005 taxable year was completed earlier in 2009, and on July 28, 2009, the IRS mailed a statutory notice of deficiency to Corporation X. Without application of this section, Corporation X has 90 days (or until October 26, 2009) to file a petition with the Tax Court. However, pursuant to paragraph (c) of this section, filing a petition with the Tax Court is one of the taxpayer acts for which a period of up to one year may be disregarded. Because Corporation X is an affected taxpayer, Corporation X's petition to the Tax Court will be timely if filed on or before November 30, 2009, the last day of the postponement period.

Example 4. (i) H and W, individual calendar year taxpayers, intend to file a joint Form 1040, ''U.S. Individual Income Tax Return,'' for the 2008 taxable year and are required to file a Schedule H, ''Household Employment Taxes.'' The joint return is due on April 15, 2009. H and W's principal residence is in County M in State Q.

(ii) On April 2, 2009, a severe ice storm strikes County M. On April 5, 2009, certain counties in State Q (including County M) are determined to be disaster areas within the meaning of section 1033(h)(3) that are eligible for assistance by the Federal government under the Stafford Act. Also on April 5, 2009, the IRS determines that County M in State Q is a covered disaster area and publishes guidance announcing that the time period for affected taxpayers to file returns, pay taxes, and perform other time-sensitive acts falling on or after April 2, 2009, and on or before June 2, 2009, has been postponed to June 2, 2009.

(iii) Because H and W's principal residence is in County M, H and W are affected taxpayers. April 15, 2009, the due date for the filing of H and W's 2008 Form 1040 and Schedule H, falls within the postponement period described in the IRS published guidance. Thus, H and W's return will be timely if filed on or before June 2, 2009. If H and W request an extension of time to file under section 6081 on or before June 2, 2009, the extension is deemed to have been filed by April 15, 2009. Thus, H and W's return will be timely if filed on or before October 15, 2009.

(iv) April 15, 2009, is also the due date for the payment due on the return. This date falls within the postponement period described in the IRS published guidance. Thus, the payment of tax due with the return will be timely if paid on or before June 2, 2009 the last day of the postponement period. If H and W fail to pay the tax due on the 2008 Form 1040 by June 2, 2009, and do not receive an extension of time to pay under section 6161, H and W will be subject to failure to pay penalties and accrual of interest beginning on June 3, 2009.

Example 5. (i) H and W, residents of County D in State G, intend to file an amended return to request a refund of 2008 taxes. H and W timely filed their 2008 income tax return on April 15, 2009. Under section 6511(a), H and W's amended 2008 tax return must be filed on or before April 16, 2012 (because April 15, 2012 falls on a Sunday, H and W's amended return was due to be filed on April 16, 2012).

(ii) On April 2, 2012, an earthquake strikes County D. On April 6, 2012, certain counties in State G (including County D) are determined to be disaster areas within the meaning of section 1033(h)(3) that are eligible for assistance by the Federal government under the Stafford Act. Also on April 6, 2012, the IRS determines that County D in State G is a covered disaster area and publishes guidance announcing that the time period for affected taxpayers to file returns, pay taxes, and perform other time-sensitive acts falling on or after April 2, 2012, and on or before October 2, 2012, has been postponed to October 2, 2012.

(iii) Under paragraph (c) of this section, filing a claim for refund of tax is one of the taxpayer acts for which the IRS may disregard a period of up to one year. The postponement period for this disaster begins on April 2, 2012, and ends on October 2, 2012. Accordingly, H and W's claim for refund for 2008 taxes will be timely if filed on or before October 2, 2012. Moreover, in applying the lookback period in section 6511(b)(2)(A), which limits the amount of the allowable refund, the period from October 2, 2012, back to April 2, 2012, is disregarded under paragraph (b)(1)(iii) of this section. Thus, if the claim is filed on or before October 2, 2012, amounts deemed paid on April 15, 2009, under section 6513(b), such as estimated tax and tax withheld from wages, will have been paid within the lookback period of section 6511(b)(2)(A).

Example 6. (i) A is an unmarried, calendar year taxpayer whose principal residence is located in County W in State Q. A intends to file a Form 1040 for the 2008 taxable year. The return is due on April 15, 2009. A timely files Form 4868, ''Application for Automatic Extension of Time to File U.S. Individual Income Tax Return.'' Due to A's timely filing of Form 4868, the extended filing deadline for A's 2008 tax return is October 15, 2009. Because A timely requested an extension of time to file, A will not be subject to the failure to file penalty under section 6651(a)(1), if A files the 2008 Form 1040 on or before October 15, 2009. However, A failed to pay the tax due on the return by April 15, 2009 and did not receive an extension of time to pay under section 6161. Absent reasonable cause, A is subject to the failure to pay penalty under section 6651(a)(2) and accrual of interest.

(ii) On September 30, 2009, a blizzard strikes County W. On October 5, 2009, certain counties in State Q (including County W) are determined to be disaster areas within the meaning of section 1033(h)(3) that are eligible for assistance by the Federal government under the Stafford Act. Also on October 5, 2009, the IRS determines that County W in State Q is a covered disaster area and announces that the time period for affected taxpayers to file returns, pay taxes, and perform other time-sensitive acts falling on or after September 30, 2009, and on or before December 2, 2009, has been postponed to December 2, 2009.

(iii) Because A's principal residence is in County W, A is an affected taxpayer. Because

October 15, 2009, the extended due date to file A's 2008 Form 1040, falls within the postponement period described in the IRS's published guidance, A's return is timely if filed on or before December 2, 2009. However, the payment due date, April 15, 2009, preceded the postponement period. Thus, A will continue to be subject to failure to pay penalties and accrual of interest during the postponement period.

Example 7. (i) H and W, individual calendar year taxpayers, intend to file a joint Form 1040 for the 2008 taxable year. The joint return is due on April 15, 2009. After credits for taxes withheld on wages and estimated tax payments, H and W owe tax for the 2008 taxable year. H and W's principal residence is in County J in State W.

(ii) On March 3, 2009, severe flooding strikes County J. On March 6, 2009, certain counties in State W (including County J) are determined to be disaster areas within the meaning of section 1033(h)(3) that are eligible for assistance by the Federal government under the Stafford Act. Also on March 6, 2009, the IRS determines that County J in State W is a covered disaster area and publishes guidance announcing that the time period for affected taxpayers to file returns, pay taxes, and perform other time-sensitive acts falling on or after March 3, 2009, and on or before June 1, 2009, has been postponed to June 1, 2009.

(iii) Because H and W's principal residence is in County J, H and W are affected taxpayers. April 15, 2009, the due date for filing the 2008 joint return, falls within the postponement period described in the IRS published guidance. Therefore, H and W's joint return without extension will be timely if filed on or before June 1, 2009. Similarly, H and W's 2008 income taxes will be timely paid if paid on or before June 1, 2009.

(iv) On April 30, 2009, H and W timely file Form 4868, ''Application for Automatic Extension of Time to File U.S. Individual Income Tax Return.'' H and W's extension will be deemed to have been filed on April 15, 2009. Thus, H and W's 2008 income tax return will be timely if filed on or before October 15, 2009.

(v) H and W did not request or receive an extension of time to pay. Therefore, the payment of tax due with the 2008 joint return will be timely if paid on or before June 1, 2009. If H and W fail to pay the tax due on the 2008 joint return by June 1, 2009, H and W will be subject to failure to pay penalties and accrual of interest beginning on June 2, 2009.

Example 8. The facts are the same as in *Example 7* except that H and W file the joint 2008 return and pay the tax due on April 15, 2009. Later, H and W discover additional deductions that would lower their taxable income for 2008. On June 1, 2012, H and W file a claim for refund under section 6511(a). The amount of H and W's overpayment exceeds the amount of taxes paid on April 15, 2009. Section 6511(a) generally requires that a claim for refund be filed within three years from the time the return was filed or two years from the time the tax was paid, whichever period expires later. Section 6511(b)(2)(A) includes within the lookback period the period of an extension of time to file. Thus, payments that H and W made on or after June 1, 2009 would be eligible to be refunded. Because the period from April 15, 2009 to June 1, 2009 is disregarded, the payments H and W made on April 15, 2009 (including withholding or estimated tax payments deemed to have been made on April 15, 2009) would also be included in the section 6511(b)(2)(A) lookback period. Thus, H and W are entitled to a full refund in the amount of their overpayment.

Example 9. (i) H and W, individual calendar year taxpayers, entered into an installment agreement with respect to their 2006 tax liabilities. H and W's installment agreement required H and W to make regularly scheduled installment payments on the 15th day of the month for the next 60 months. H and W's principal residence is in County K in State X.

(ii) On May 1, 2009, severe flooding strikes County K. On May 5, 2009, certain counties in State X including County K) are determined by the Federal government to be disaster areas within the meaning of section 1033(h)(3), and are eligible for assistance under the Stafford Act. Also on May 5, 2009, the IRS determines that County K in State X is a covered disaster area and publishes guidance announcing that the time period for affected taxpayers to file returns, pay taxes, and perform other time-sensitive acts falling on or after May 1, 2009 and on or before July 1, 2009, has been postponed to July 1, 2009.

(iii) Because H and W's principal residence is in County K, H and W are affected taxpayers. Pursuant to the IRS's grant of relief under section 7508A, H and W's installment agreement payments that become due during the postponement period are suspended until after the postponement period has ended. H and W will be required to resume payments no later than August 15, 2009. Skipped payments will be tacked on at the end of the installment payment period. Because the installment agreement pertains to prior year tax liabilities, interest and penalties will continue to accrue. H and W may, however, be entitled to abatement of the failure to pay penalties incurred during the postponement period upon establishing reasonable cause.

(g) *Effective/applicability date.* This section applies to disasters declared after January 15, 2009.

Linda E. Stiff,

Deputy Commissioner for Services and Enforcement.

Approved: January 6, 2009.

Eric Solomon,

Assistant Secretary of the Treasury (Tax Policy).

[FR Doc. E9–767 Filed 1–14–09; 8:45 am]

BILLING CODE 4830–01–P

DEPARTMENT OF LABOR

Employee Benefits Security Administration

29 CFR Part 2560

RIN 1210–AB24

Civil Penalties Under ERISA Section 502(c)(4)

Correction

In rule document Z8–31188 beginning on page 17 in the issue of Friday, January 2, 2009 make the following correction:

On page 17, in the second column, in the **DATES** heading, March 3, 2008 should read March 3, 2009.

[FR Doc. Z8–31188 Filed 1–14–09; 8:45 am]

BILLING CODE 1505–01–D

DEPARTMENT OF HOMELAND SECURITY

Coast Guard

33 CFR Part 165

[Docket No. USCG–2008–1236]

RIN 1625–AA87

Security Zone; Steam Generator Transit, Captain of the Port Zone San Diego; San Diego, CA

AGENCY: Coast Guard, DHS.

ACTION: Temporary final rule.

SUMMARY: The Coast Guard is establishing a temporary moving security zone around steam generators as they transit through and when moored in the Captain of the Port(COTP) zone San Diego. This security zone is needed to prevent vessels from transiting in the vicinity of the generators to help ensure the safety and security of the operation. Entry into this zone will be prohibited unless specifically authorized by the Captain of the Port, San Diego, or his designated representative.

DATES: This rule is effective from 11:59 p.m. on January 2, 2009, to 11:59 p.m on January 22, 2009.

ADDRESSES: Documents indicated in this preamble as being available in the docket are part of docket USCG–2008–1236 and are available online at *http://www.regulations.gov.* They are also available for inspection or copying two locations: the Docket Management Facility (M–30), U.S. Department of Transportation, West Building Ground Floor, Room W12–140, 1200 New Jersey Avenue, SE., Washington, DC 20590,

between 9 a.m. and 5 p.m., Monday through Friday, except Federal holidays, and the U.S. Coast Guard Sector San Diego, 2710 N. Harbor Drive, San Diego, CA 92101 between 8 a.m. and 3 p.m., Monday through Friday, except Federal holidays.

FOR FURTHER INFORMATION CONTACT: If you have questions on this temporary rule, call Petty Officer Shane Jackson, USCG, Waterways Management, U.S. Coast Guard Sector San Diego at (619) 278–7267. If you have questions on viewing the docket, call Renee V. Wright, Program Manager, Docket Operations, telephone 202–366–9826.

SUPPLEMENTARY INFORMATION:

Regulatory Information

The Coast Guard is issuing this temporary final rule without prior notice and opportunity to comment pursuant to authority under section 4(a) of the Administrative Procedure Act (APA) (5 U.S.C. 553(b)). This provision authorizes an agency to issue a rule without prior notice and opportunity to comment when the agency for good cause finds that those procedures are ''impracticable, unnecessary, or contrary to the public interest.'' Under 5 U.S.C. 553(b)(B), the Coast Guard finds that good cause exists for not publishing a notice of proposed rulemaking (NPRM) with respect to this rule because it was impracticable since the logistical details of the steam generators transit in the Captain of the Port Zone San Diego was not finalized nor presented to the Coast Guard in enough time to draft and publish an NPRM. As such, the event would occur before the rulemaking process was complete.

Under 5 U.S.C. 553(d)(3), the Coast Guard finds that good cause exists for making this rule effective less than 30 days after publication in the **Federal Register**. The issuance of the final approval and permitting was so recent that the rule would be made effective less than 30 days after publication.

Background and Purpose

Steam Generators will be transiting to San Onofre Nuclear Power Plant. Due to the operational significance of the cargo the Captain of the Port is establishing a security zone to prevent vessels from transiting the area and to protect the generators and personnel from potential damage and injury.

Discussion of Rule

The Coast Guard is establishing a temporary moving security zone that will be enforced from 11:59 p.m. on January 2, 2009, to 11:59 p.m on January 22, 2009. The limits of the security zone will include all waters of the Pacific Ocean extending from the surface to the sea floor, within 200 yards ahead, and 100 yards on each side and astern of the steam generators while underway and 100 yards on all sides when moored in the navigable waters of COTP zone San Diego.

Persons and vessels are prohibited from entering into or transiting through this security zone unless authorized by the Captain of the Port, or his designated representative. By prohibiting all vessel traffic from entering the waters surrounding these generators, the security of the cargo will be enhanced. U.S. Coast Guard personnel will enforce the security zone.

The Captain of the Port may, in his discretion grant waivers or exemptions to this rule, either on a case-by-case basis or categorically to a particular class of vessel that otherwise is subject to adequate control measures.

The Coast Guard will issue a Broadcast Notice to Mariners to further ensure the local boating traffic is aware of the security zone and its geographical boundaries. Vessels or persons violating this section will be subject to both criminal and civil penalties.

The security zone will be effective from 11:59 p.m. on January 2, 2009, to 11:59 p.m on January 22, 2009. A Broadcast Notice to Mariners will notify the public on the specific days of transit.

Regulatory Analyses

We developed this rule after considering numerous statutes and executive orders related to rulemaking. Below we summarize our analyses based on 13 of these statutes or executive orders.

Regulatory Planning and Review

This rule is not a significant regulatory action under section 3(f) of Executive Order 12866, Regulatory Planning and Review, and does not require an assessment of potential costs and benefits under section 6(a)(3) of that Order. The Office of Management and Budget has not reviewed it under that Order.

We expect the economic impact of this proposed rule to be so minimal that a full Regulatory Evaluation is unnecessary. This determination is based on the size and location of the security zone. The affected area will be relatively small in size and will only briefly affect the transits of other vessels.

Small Entities

Under the Regulatory Flexibility Act (5 U.S.C. 601–612), we have considered whether this rule would have a significant economic impact on a substantial number of small entities. The term ''small entities'' comprises small businesses, not-for-profit organizations that are independently owned and operated and are not dominant in their fields, and governmental jurisdictions with populations of less than 50,000.

The Coast Guard certifies under 5 U.S.C. 605(b) that this rule will not have a significant economic impact on a substantial number of small entities.

We anticipate that the security zone would not have a significant economic impact on a substantial number of small entities for the following reasons. This rule would only affect those small portions of the waterways immediately surrounding the military operations within the COTP Zone. Before the effective period, the Coast Guard will issue maritime advisories widely available to users of the waterways so owners and operators can make necessary preparations. Traffic may also be allowed to pass through the security zone with the permission of the Coast Guard patrol commander or COTP.

If you think that your business, organization, or governmental jurisdiction qualifies as a small entity and that this rule would have a significant economic impact on it, please submit a comment (see **ADDRESSES**) explaining why you think it qualifies and how and to what degree this rule would economically affect it.

Assistance for Small Entities

Under section 213(a) of the Small Business Regulatory Enforcement Fairness Act of 1996 (Pub. L. 104–121), we offer to assist small entities in understanding the rule so that they can better evaluate its effects on them and participate in the rulemaking process. Small businesses may send comments on the actions of Federal employees who enforce, or otherwise determine compliance with, Federal regulations to the Small Business and Agriculture Regulatory Enforcement Ombudsman and the Regional Small Business Regulatory Fairness Boards. The Ombudsman evaluates these actions annually and rates each agency's responsiveness to small business. If you wish to comment on actions by employees of the Coast Guard, call 1–888-REG-FAIR (1–888–734–3247). The Coast Guard will not retaliate against small entities that question or complain

about this rule or any policy or action of the Coast Guard.

Collection of Information

This rule calls for no new collection of information under the Paperwork Reduction Act of 1995 (44 U.S.C. 3501–3520).

Federalism

A rule has implications for federalism under Executive Order 13132, Federalism, if it has a substantial direct effect on State or local governments and would either preempt State law or impose a substantial direct cost of compliance on them. We have analyzed this rule under that Order and have determined that it does not have implications for federalism.

Unfunded Mandates Reform Act

The Unfunded Mandates Reform Act of 1995 (2 U.S.C. 1531–1538) requires Federal agencies to assess the effects of their discretionary regulatory actions. In particular, the Act addresses actions that may result in the expenditure by a State, local, or tribal government, in the aggregate, or by the private sector of $100,000,000 or more in any one year. Though this rule will not result in such an expenditure, we do discuss the effects of this rule elsewhere in this preamble.

Taking of Private Property

This rule will not effect a taking of private property or otherwise have taking implications under Executive Order 12630, Governmental Actions and Interference with Constitutionally Protected Property Rights.

Civil Justice Reform

This rule meets applicable standards in sections 3(a) and 3(b)(2) of Executive Order 12988, Civil Justice Reform, to minimize litigation, eliminate ambiguity, and reduce burden.

Protection of Children

We have analyzed this rule under Executive Order 13045, Protection of Children from Environmental Health Risks and Safety Risks. This rule is not an economically significant rule and does not create an environmental risk to health or risk to safety that may disproportionately affect children.

Indian Tribal Governments

This rule does not have tribal implications under Executive Order 13175, Consultation and Coordination with Indian Tribal Governments, because it does not have a substantial direct effect on one or more Indian tribes, on the relationship between the Federal Government and Indian tribes, or on the distribution of power and responsibilities between the Federal Government and Indian tribes.

Energy Effects

We have analyzed this rule under Executive Order 13211, Actions Concerning Regulations That Significantly Affect Energy Supply, Distribution, or Use. We have determined that it is not a ''significant energy action'' under that order because it is not a ''significant regulatory action'' under Executive Order 12866 and is not likely to have a significant adverse effect on the supply, distribution, or use of energy. The Administrator of the Office of Information and Regulatory Affairs has not designated it as a significant energy action. Therefore, it does not require a Statement of Energy Effects under Executive Order 13211.

Technical Standards

The National Technology Transfer and Advancement Act (NTTAA) (15 U.S.C. 272 note) directs agencies to use voluntary consensus standards in their regulatory activities unless the agency provides Congress, through the Office of Management and Budget, with an explanation of why using these standards would be inconsistent with applicable law or otherwise impractical. Voluntary consensus standards are technical standards (*e.g.*, specifications of materials, performance, design, or operation; test methods; sampling procedures; and related management systems practices) that are developed or adopted by voluntary consensus standards bodies.

This rule does not use technical standards. Therefore, we did not consider the use of voluntary consensus standards.

Environment

We have analyzed this rule under Department of Homeland Security Management Directive 5100.1 and Commandant Instruction M16475.lD, which guide the Coast Guard in complying with the National Environmental Policy Act of 1969 (NEPA) (42 U.S.C. 4321–4370f), and have concluded under the Instruction that there are no factors in this case that would limit the use of a categorical exclusion under section 2.B.2 of the Instruction. Therefore, this rule is categorically excluded, under figure 2–1, paragraph (34)(g), of the Instruction, from further environmental documentation.

An environmental analysis checklist and a categorical exclusion determination are available in the docket where indicated under **ADDRESSES**.

List of Subjects in 33 CFR Part 165

Harbors, Marine safety, Navigation (water), Reporting and recordkeeping requirements, Security measures, Waterways.

■ For the reasons discussed in the preamble, the Coast Guard amends 33 CFR part 165 as follows:

PART 165—REGULATED NAVIGATION AREAS AND LIMITED ACCESS AREAS

■ 1. The authority citation for part 165 continues to read as follows:

Authority: 33 U.S.C. 1226, 1231; 46 U.S.C. Chapter 701; 50 U.S.C. 191, 195; 33 CFR 1.05–1, 6.04–1, 6.04–6, and 160.5; Pub. L. 107–295, 116 Stat. 2064; Department of Homeland Security Delegation No. 0170.1.

■ 2. Add § 165.T11–132 to read as follows:

§ 165.T11–132 Security zone; Steam generator transit, Captain of the port zone San Diego; San Diego, California.

(a) *Location.* The security zone will include all waters of the Pacific Ocean extending from the surface to the sea floor, within 200 yards ahead, and 100 yards on each side and astern of the steam generators, while underway and 100 yards on all side when moored in the navigable waters of COTP zone San Diego, as defined in 33 CFR 3.55–15.

(b) *Enforcement Period.* This section will be enforced from 11:59 p.m. on January 2, 2009, to 11:59 p.m on January, 22, 2009. If the need for the security zone ends before the scheduled termination time, the Captain of the Port will cease enforcement of this security zone and will announce that fact via Broadcast Notice to Mariners.

(c) *Definitions.* The following definition applies to this section:

Designated representative, means any Commissioned, Warrant, and Petty Officers of the Coast Guard onboard Coast Guard, Coast Guard Auxiliary, or local, state, and federal law enforcement vessels who have been authorized to act on the behalf of the Captain of the Port to assist in enforcement of this section.

(d) *Regulations.* (1) Entry into, transit through or anchoring within this safety zone is prohibited unless authorized by the Captain of the Port of San Diego or his designated on-scene representative.

(2) Mariners requesting permission to transit through the safety zone may request authorization to do so from the Sector San Diego Command Center (COMCEN). The COMCEN may be contacted on VHF–FM Channel 16.

(3) All persons and vessels shall comply with the instructions of the

Coast Guard Captain of the Port or the designated representative.

(4) Upon being hailed by U.S. Coast Guard patrol personnel by siren, radio, flashing light, or other means, the operator of a vessel shall proceed as directed.

(5) The Coast Guard may be assisted by other federal, state, or local agencies in the enforcement of this section.

Dated: January 2, 2009.

T.H. Farris,

Captain, U.S. Coast Guard, Captain of the Port San Diego.

[FR Doc. E9–849 Filed 1–14–09; 8:45 am]

BILLING CODE 4910–15–P

ENVIRONMENTAL PROTECTION AGENCY

40 CFR Parts 51 and 52

[EPA–HQ–OAR–2003–0064, FRL–8762–8]

RIN 2060–AL75

Prevention of Significant Deterioration (PSD) and Nonattainment New Source Review (NSR): Aggregation and Project Netting

AGENCY: Environmental Protection Agency (EPA).

ACTION: Final action.

SUMMARY: The EPA is taking final action on one part of the September 14, 2006 **Federal Register** proposed rule for the New Source Review (NSR) program. The purpose of the proposed rule was to clarify for sources and permitting authorities three aspects of the NSR program—aggregation, debottlenecking, and project netting—that pertain to how to determine what emissions increases and decreases to consider in determining major NSR applicability for modified sources. This final action addresses only aggregation.

This action retains the current rule text for aggregation and interprets that rule text to mean that sources and permitting authorities should combine emissions when activities are ''substantially related.'' It also adopts a rebuttable presumption that activities at a plant can be presumed not to be substantially related if they occur three or more years apart.

With respect to the other two components of the originally proposed rule, the EPA is taking no action on the proposed rule for project netting and, by way of a separate document published in the ''Proposed Rules'' section of this **Federal Register**, is withdrawing the proposed provisions for debottlenecking.

DATES: This final rule is effective on February 17, 2009.

FOR FURTHER INFORMATION CONTACT: Mr. David Svendsgaard, Air Quality Policy Division, Office of Air Quality Planning and Standards (C504–03), Environmental Protection Agency, Research Triangle Park, NC 27711, telephone number: (919) 541–2380; fax number: (919) 541–5509, e-mail address: *svendsgaard.dave@epa.gov*.

SUPPLEMENTARY INFORMATION:

I. General Information

A. Does this action apply to me?

Entities potentially affected by this action include sources in all industry groups. The majority of sources potentially affected are expected to be in the following groups.

Industry group	SIC [a]	NAICS [b]
Electric Services	491	221111, 221112, 221113, 221119, 221121, 221122.
Petroleum Refining	291	324110.
Industrial Inorganic Chemicals	281	325181, 325120, 325131, 325182, 211112, 325998, 331311, 325188.
Industrial Organic Chemicals	286	325110, 325132, 325192, 325188, 325193, 325120, 325199.
Miscellaneous Chemical Products	289	325520, 325920, 325910, 325182, 325510.
Natural Gas Liquids	132	211112.
Natural Gas Transport	492	486210, 221210.
Pulp and Paper Mills	261	322110, 322121, 322122, 322130.
Paper Mills	262	322121, 322122.
Automobile Manufacturing	371	336111, 336112, 336211, 336992, 336322, 336312, 336330, 336340, 336350, 336399, 336212, 336213.
Pharmaceuticals	283	325411, 325412, 325413, 325414.
Mining	211, 212, 213	21.
Agriculture, Fishing and Hunting	111, 112, 113, 115	11.

[a] Standard Industrial Classification.
[b] North American Industry Classification System.

Entities potentially affected by the subject rule for this proposed action also include state, local, and tribal governments.

B. How is this preamble organized?

The information presented in this preamble is organized as follows:

I. General Information
A. Does this action apply to me?
B. How is this preamble organized?
II. Background
III. Aggregation
A. Overview
B. EPA's Policy on Aggregation
C. Retention of Current Rule Text
D. Environmental Impact
IV. Project Netting
V. Statutory and Executive Order Reviews
A. Executive Order 12866: Regulatory Planning and Review
B. Paperwork Reduction Act
C. Regulatory Flexibility Analysis
D. Unfunded Mandates Reform Act
E. Executive Order 13132: Federalism
F. Executive Order 13175: Consultation and Coordination With Indian Tribal Governments
G. Executive Order 13045: Protection of Children From Environmental Health and Safety Risks
H. Executive Order 13211: Actions That Significantly Affect Energy Supply, Distribution, or Use
I. National Technology Transfer and Advancement Act
J. Executive Order 12899: Federal Actions To Address Environmental Justice in Minority Populations and Low-Income Populations
K. Congressional Review Act
L. Judicial Review
VI. Statutory Authority

II. Background

The reader is referred to 67 FR 80187–88 (December 31, 2002) for an overview of the NSR program of the Clean Air Act (CAA) and to 71 FR 54237 (September 14, 2006) for background on this rulemaking.

III. Aggregation

A. Overview

1. What is ''Aggregation''?

When undergoing a physical or operational change, a source determines major NSR applicability through a two-step analysis that first considers whether the increased emissions from a particular proposed change alone are significant, followed by a calculation of the change's net emissions increase considering all contemporaneous increases and decreases at the source (*i.e.*, source-wide netting calculation) to determine if a major modification has occurred. *See,* for example, 40 CFR 52.21(b)(2)(i). The term ''aggregation'' comes into play in the first step (Step 1), and describes the process of grouping together multiple, nominally-separate but related, physical changes or changes in the method of operation into one physical or operational change, or ''project.'' The emission increases of the nominally-separate changes are combined for purposes of determining whether a significant emissions increase has occurred from the project. *See,* for example, 40 CFR 52.21(b)(40). In addition, when undertaking multiple nominally-separate changes, the source must consider whether NSR applicability should be determined collectively or whether the emissions from each of these activities should separately undergo a Step 1 analysis.[1]

Neither the CAA nor current EPA rules specifically address the basis upon which to aggregate nominally-separate changes for the purpose of making NSR applicability determinations. Instead, we[2] have developed our aggregation policy over time through statutory and regulatory interpretation and applicability determinations. Our aggregation policy aims to ensure the proper permitting of modifications that involve multiple physical and/or operational changes. Thus, multiple, nominally-separate activities that are sufficiently interrelated should be grouped together and considered a single project for the purpose of Step 1 in the NSR applicability test. When these sorts of activities are evaluated separately, they may circumvent the purpose of the NSR program, which is designed to address emissions from projects that have a significant net emissions increase.

2. This Action

On September 14, 2006 (71 FR 54235), we proposed to revise the NSR regulations in 40 CFR parts 51 and 52 to state that a source must aggregate emissions from nominally-separate changes that are dependent on one another to be technically or economically viable. More specifically, we proposed that if a source or reviewing authority determines that nominally-separate changes are dependent on each other for their technical or economic viability, the source and reviewing authority must consider these activities to be a single project and must aggregate all of the emissions increases to properly evaluate major NSR applicability. In our notice's preamble, we offered definitions for the terms ''economic dependence'' and ''technical dependence,'' and we discussed example scenarios to describe how the test should work. We took comment on all aspects of the proposed regulatory clarification for NSR Aggregation.

As we described in our 2006 proposal preamble, our aggregation policy has never been spelled out in detail in a single letter or memorandum. We have consistently interpreted the CAA to require the grouping of related activities when determining which emissions changes result from a physical or operational change at a facility. At issue is what constitutes a ''project'' for purposes of determining NSR applicability under the CAA. Proper characterization of this term is important for regulated entities to understand their permitting obligations.

Over the years, our aggregation policy has evolved in large part from specific, case-by-case after-the-fact inquiries related to the possible circumvention of NSR in existing permits. The letters and memoranda resulting from these inquiries have been, until now, the sole resource for permitting authorities and sources to rely upon in making aggregation decisions. However, the decision to aggregate or disaggregate activities is highly case-dependent, such that letters and memoranda that opine on whether to aggregate a particular set of activities at one facility are not necessarily transferrable to a decision to aggregate a similar set of activities but with a slightly different set of circumstances at another plant. Our 2006 proposal aimed to address concerns about applying our policy in such instances.

This **Federal Register** notice takes final action on the regulations concerning NSR aggregation. More specifically, we are finalizing an interpretation of the existing rule language with respect to our policy on aggregation. This interpretation is intended to describe how to approach aggregation under the existing NSR rules. However, elements of this interpretation were proposed for this first time in this action, and are being finalized as a definitive agency position for the first time in this notice. As such, this interpretation will only apply prospectively. As explained below, we are not adopting the amended regulatory text in 40 CFR parts 51 and 52 that we proposed. Through this notice we retain the current relevant regulatory text for ''project'' and provide our new interpretation of that text regarding when emissions at a source should be aggregated into a single project for purposes of determining major NSR applicability.

In this preamble, we enumerate several principles of our aggregation policy that apply to the existing rule text. We explain that activities should be aggregated for the purposes of the NSR applicability determination only in cases where there is a substantial relationship among the activities, either from a technical or an economic standpoint. The determination of this relationship is based on the relevant case-specific facts and circumstances; as such, sources and permitting authorities should be careful to not over apply the examples in this final notice to cases with slightly different sets of facts and circumstances. In addition to the discussion of the technical or economic relationship, this notice also reiterates the role of timing in making aggregation decisions and establishes for the first time a rebuttable timing-based presumption that permitting authorities may rely upon to support a determination for nonaggregation.

This notice serves as final agency action with respect to our September 2006 proposed criteria for NSR aggregation. This action should enable the aggregation policy to be applied consistently by both those considering the applicability of NSR to potential modifications and those conducting an after-the-fact inquiry regarding whether or not NSR was circumvented through the failure to aggregate dependent physical or operational changes at a source.

B. EPA's Policy on Aggregation

1. Substantial Relationship

We received many comments on our September 2006 proposed rule for aggregation. Comments from all stakeholder groups raised a variety of concerns about our attempts to define

[1] Even if activities are determined to be separate and subject to an individual Step 1 analysis, the emission increases and decreases may still be included together in the netting calculation if the projects occur within a contemporaneous period.

[2] In this notice, the terms ''we,'' ''us,'' and ''our'' refer to the EPA.

terms used in the proposed rule and preamble. We sought comment on how to best define the terms ''technical dependence'' and ''economic dependence.'' Our intent in proposing to add these terms to our regulations was to frame them in a manner that could be universally applied and reduce the subjective nature of the aggregation test. We also requested comments on specific examples of dependence and independence, and asked for other suggestions for maximizing the clarity with which to articulate these criteria.

Many commenters, representing a variety of stakeholder groups, expressed that our definitions and examples were too prescriptive and would lead to increased confusion as compared to the existing policy being applied. They raised specific concerns that our hypothetical examples would restrict one's ability to handle cases that are similar but that have small nuances, and could lead to aggregating physical or operational changes that are truly independent or disaggregating changes that are truly dependent. Commenters also asserted that determining economic dependence would be highly site- and project-specific, so what may prove to be sufficiently related from an economic standpoint at one plant may not have the same level of interconnection at another plant. For example, one commenter stated ''* * * it is virtually impossible to craft a meaningful, easy-to-apply test for economic dependence. EPA's proposed criteria for economic dependence may work in some situations * * * but it will not work in the more common situations, where the processes at a source are at least somewhat interrelated.'' [3] Commenters also raised similar concerns with our efforts to define technical dependence, but to a lesser degree.

We agree with many of the commenters that the proposed definitions for economic and technical dependence/viability were overly prescriptive, and we also agree that the decision to aggregate activities is highly case-specific and requires consideration of factors that are difficult to fully characterize with a bright-line test. We recognize the challenges to precisely describe these terms, particularly when the definitions must apply to the myriad cases that permitting authorities encounter. We have concluded, upon considering the comments, that the terms ''dependence'' and ''viability,'' though used by EPA in past guidance memoranda, should not be adopted as regulatory ''bright lines'' regarding whether to aggregate activities under the NSR program. Although we are not adopting regulatory language, we do note that whether a physical or operational change is dependent on another for its viability is still a relevant factor in assessing whether the changes should be aggregated. Technical or economic dependence may be evidence of a substantial relationship between changes, though projects may also be substantially related where there is not a strict dependence of one on the other.

Activities at a source should be aggregated when they are substantially related. To be ''substantially related,'' there should be an apparent interconnection—either technically or economically—between the physical and/or operational changes, or a complementary relationship whereby a change at a plant may exist and operate independently, however its benefit is significantly reduced without the other activity. Two examples offered in our 2006 proposal at 71 FR 54246 present clear cases of a ''substantial relationship'' between two physical or operational changes: (1) The installation of burners on a utility boiler and a required modification to the air handling system in order to avoid severe impairment when operating the new burners; and (2) the installation of a process heater to make a new product and the installation of a holding tank necessary to hold the new product after its manufacture.

When there is no technical or economic relationship between activities or where the relationship is not substantial, their emissions need not be aggregated for NSR purposes. For example, in most cases, activities occurring in unrelated portions of a major stationary source (*e.g.*, a plant that makes two separate products and has no equipment shared among the two processing lines) will not be substantially related. The test of a substantial relationship centers around the interrelationship and interdependence of the activities, such that substantially related activities are likely to be jointly planned (*i.e.*, part of the same capital improvement project or engineering study), and occur close in time and at components that are functionally interconnected. We note that these factors are not necessarily determinative of a substantial relationship, but are merely indicators that may suggest that two or more activities are likely to be substantially related and, therefore, candidates for aggregation.

For example, at an automotive assembly facility, the mere fact that the various operations at the plant ultimately produce a car does not necessarily mean that a physical or operational change performed at the facility's boiler house is always ''substantially related'' to any change at the automotive coating operation. Some changes to an industrial boiler may not be substantially related to a particular change at a coating line, since a boiler often serves many other operations at an automotive plant. For instance, if higher pressure steam is needed to drive a steam pump elsewhere within the plant, the boiler island could be retrofitted with an additional heat exchanger to superheat the steam. Even though the boiler may provide power or may heat the make-up air for the coating line enclosures, an expansion at the coating line would not necessarily have a need for the new higher pressure steam output, would probably not be related to the steam pump, and would not necessarily operate more efficiently because of the higher pressure steam that is required by the steam pump. Absent any evidence demonstrating a substantial relationship between such a retrofit at the boiler and the change at the coating line, a permitting authority need not aggregate emissions from these physical changes. On the other hand, if an automotive facility installs a new, larger gas-fired cure oven to handle the increased throughput from the expanded surface coating operation, then we would expect that a substantial relationship between the oven and the coating line activities would exist and these activities' emissions should be aggregated.

Furthermore, simply because a physical or operational change occurs at the same process unit as a previous change does not automatically establish a substantial relationship. As a commenter noted, ''[a]lmost all plant improvements are dependent on another piece of equipment as a technical matter. For instance, a chemical synthesis operation may install a new process dryer or a coater may install a new dryer or oven simply because of processes *already* present at a facility. The decision to install the new dryer or oven, however, is separate because of other factors that could include efficiency or fuel improvements, market factors or demand for a new product or the original group of products, or process refinements.'' [4] We agree with this commenter that, despite the fact that the changes occur at the same process unit, the dryer installation could be separate from other

[3] Douglas J. Fulle, Oglethorpe Power Corporation, EPA–HQ–OAR–2003–0064–0050.1.

[4] Leslie Sue Ritts, National Environmental Development Association's Clean Air Project, EPA–HQ–OAR–2003–0064–0066.1.

modifications to the process unit if, as suggested by the comment, there was not a substantial technical or economic relationship among the changes. (As noted above, however, a case-specific inquiry is necessary to confirm this.)

Finally, while examining the technical and economic relationship among activities has always been central to aggregation decisions, we note that a portion of one of our past letters addressing a site-specific scenario may have been applied beyond the specific scenario it discussed. In a memorandum issued in 1993 related to a research facility owned by 3M Company in Maplewood, Minnesota [5] (hereafter ''3M-Maplewood memo''), after describing different factors that could be considered in deciding whether the source may have circumvented NSR by not aggregating related research and development activities, we concluded the determination by stating that modifications at plants which are expected to modify regularly in response to consumer and projected production demands or research needs ''cannot be presumed independent given the plant's overall basic purpose to support a variety of research and development activities.'' This portion of the analysis could be taken to posit a presumption that all activities at a facility are related for NSR purposes if they contribute to the plant's basic business purpose. This suggestion that all changes consistent with the basic purpose of the source can and should be aggregated is inconsistent with the policy we are adopting in this notice that aggregation should be based on a substantial technical or economic relationship among the activities. Moreover, we are concerned that it could be interpreted to imply that almost any activity is related to any other activity at that source simply because they are both capital investments and support the company's goal to make a profit. This action explains that this is not our interpretation of the NSR rules, and that a source's ''overall basic purpose'' is not a sufficient basis for determining that activities should be aggregated.

Thus, we affirm that the decision to aggregate nominally-separate changes hinges on whether they have a substantial relationship, and we acknowledge the case-specific nature of this assessment, as well as the multiple considerations that contribute to the assessment. We understand that this policy stops short of providing the bright line criteria we sought to provide in our proposal, and we acknowledge there will continue to be gray areas that sources and permitting authorities will ultimately have to work through in deciding whether or not to aggregate a set of changes at a facility. Permitting authorities, as they have long done, will continue to exercise their best judgment in determining the technical and economic relationship of activities.

2. Timing of Activities

a. Closely-Timed Activities

Another aspect of our past aggregation policy that has at times been unclear relates to how activities that are performed close in time to each other should be handled in making an NSR applicability assessment. At times, timing of construction has been used, usually in conjunction with one or more other factors, by some permitting authorities as a basis for aggregating or disaggregating activities for NSR applicability. While the relative timing of two or more activities cannot by itself be used to determine whether they have a technical or economic relationship, it is nevertheless an objective criterion that is simpler to apply than assessing the technical and/or economic interaction of the physical or operational changes. As such, it has some appeal, and may have even been used in some cases, as a surrogate for actually establishing a relationship that serves as a basis to aggregate activities.

We are explaining in this notice that timing, in and of itself, is not determinative in a decision to aggregate activities. We do not believe that timing alone should be a basis for aggregation because it is inconsistent with our policy discussed earlier in this notice that the appropriate basis for aggregation should be a substantial technical and economic relationship. Aggregation based on timing alone could, in some cases, clearly result in aggregation of activities that have no technical or economic relationship whatsoever. There should be no presumption that activities automatically should be aggregated as a result of their proximity in time. Activities that happen to occur simultaneously at different units or large integrated manufacturing facilities do not necessarily have a substantial relationship. Even if they occur over a short period of time, multiple activities should be treated as a single project for NSR purposes only when a substantial technical or economic relationship exists among the changes.

Within certain industries, it may be common practice for certain types of activities to be done separately (though not necessarily at separate times). A company's decision to do a series of activities at the same time—*e.g.*, during a conventional scheduled outage, ''turnaround'' or ''annual shutdown''—should not be viewed as evidence of their technical or economic relatedness. In fact, absent an evaluation of the technical or economic relationship among the activities, the only presumption that should be gleaned from the practice of utilities, refineries, and other types of industry to do many activities during normally scheduled outages is that it is efficient and cost-effective to undertake multiple activities at the same time. Some of these activities will, in fact, be unrelated, but are done simultaneously simply because it is easier to make these changes at a time when the source is not operating. These activities should not be automatically aggregated.

We recognize that there has been some confusion over the aforementioned 3M-Maplewood memo and how it portrays the use of timing in making aggregation decisions. While the 3M-Maplewood memo suggested that activities that are timed within one year or eighteen months of each other may be related, and it advises authorities to scrutinize closely-timed minor source permit applications, it did not suggest that such a scenario should be the sole basis for a decision to aggregate. It simply reaffirmed our view that multiple changes over a short period of time ''should be studied'' for treatment as one project. Hence, it is consistent with this notice.

A state commenter observed ''[i]n certain circumstances timing may be a relevant consideration, together with technical and economic factors, but timing is not a conclusive factor as to whether a series of changes should be aggregated. The staging of a project into multiple smaller construction activities within a short time period may signal that further inquiry into a facility's construction activities is appropriate and under the right circumstances, timing may provide evidence, along with other factors, that a facility has or is attempting to circumvent NSR.'' [6] We agree with this commenter that knowing the timing between activities is useful solely from a standpoint of directing resources to further scrutinize activities that are timed closer together because these changes are generally more apt to be substantially related as opposed to activities that are separated by larger

[5] ''Applicability of New Source Review Circumvention Guidance to 3M-Maplewood, Minnesota'' (U.S. EPA, June 17, 1993).

[6] Carl Johnson, New York State Department of Environmental Conservation, EPA–HQ–OAR–2003–0064–0035.2.

time frames. In fact, activities that are substantially related are often so heavily aligned or interconnected that constructing only one of the activities at a time is technically unsound or illogical.[7] Therefore, even though activities that occur simultaneously are not to be presumed ''substantially related,'' it makes sense to look closer at these activities since close timing may be one—but should not be the only—indicator of whether a technical or economic relationship exists and is substantial.

b. Time-Based Presumption for Nonaggregation

In our proposal, we also solicited comment on whether we should change our aggregation approach and include a time-based presumption against aggregation. We specifically solicited comments on whether we should create a presumption in the final rule that changes separated by a certain number of years, *e.g.*, three, four, or five years, are independent and not aggregated for NSR purposes. We also solicited comments on whether we should create a rebuttable or irrebuttable presumption.

Some commenters thought that creating a timing presumption for nonaggregation would be beneficial, if properly bounded, since it would streamline the decision making process and add regulatory certainty. Others felt that it was unwarranted and would lead to incorrect results, particularly if it was made to be irrebuttable. Some commenters stated that if we set a timing upper bound for nonaggregation, we should also establish a timing lower bound for automatic aggregation.

In making aggregation decisions, we acknowledge that the determining factor—*i.e.* , whether the activities are ''substantially related''—is not always a straightforward analysis. On the other hand, the passage of time provides a fairly objective indicator of nonrelatedness between physical or operational changes. Specifically, the greater the time period between activities, the less likely that a deliberate decision was made by the source to split an otherwise ''significant'' activity into two or more smaller, non-major activities. If there is a large timeframe between the construction and operation of the activities, it is reasonable to conclude that they should be treated individually and that the CAA did not expect activities separated by large periods of time to constitute a single event when evaluating NSR applicability and control levels.

We believe that if a previous physical or operational change has operated for a period of three or more years, permitting authorities may presume that a newly constructed change is not substantially related to the earlier change. When activities are undertaken three or more years apart, there is less of a basis that they have a substantial technical or economic relationship because the activities are typically part of entirely different planning and capital funding cycles. The fact that the earlier activities were constructed and operated independently for such a long a period of time tends to support a determination that the latter activities are technically and economically unrelated and independent from the other earlier constructed activities. Even if activities are related, once three years have passed, it is difficult to argue that they are *substantially* related and constitute a single project. We note that the selection of a 3-year timeframe is long enough to ensure a reasonable likelihood that the presumption of independence will be valid, but is short enough to maintain a useful separation between relevant construction cycles, consistent with industry practice. For example, in the case of electric utilities, a commenter explained that companies plan and schedule major turbine outages every four to five years.[8]

Nevertheless, we understand that there may be exceptions to the more typical set of circumstances. Therefore, for our 3-year presumptive timeframe that we are adopting, we are making it rebuttable, such that an alternative decision can be made if conditions warrant and if the changes are, in fact, substantially related. In order to rebut the presumption of nonaggregation, there should be evidence that demonstrates a substantial relationship between the activities. For example, evidence that a company intends to undertake a phased capital improvement project, consisting of enhancements to major plant components scheduled for 2009 and 2013 that have a substantial economic relationship would likely be sufficient to rebut the presumption of nonaggregation.

Although some commenters requested that our presumption for nonaggregation be irrebuttable, we have concerns that making it irrebuttable does not fully recognize the fact that sources often implement significant modifications in a series of phased construction projects over a period of years. Setting an irrebuttable presumption would therefore hamper permitting authorities of the ability to monitor compliance with the rules in these instances. A rebuttable presumption, on the other hand, enables the permitting agencies to retain the authority to ensure that facility owners and operators do not engage in a pattern of development including phasing, staging, and delaying or engaging in incremental construction at a facility which, except for such pattern of development, would otherwise require a permit.

While having a timeframe-based presumption for nonaggregation may appear at odds with the previous section of this notice, in which we reject the use of timing alone in making aggregation decisions, the two positions are consistent because they both stem from the same principle that aggregation is based on a technical or economic relationship. Our primary concern with the use of timing in making aggregation decisions has been the interpretation of the 3M-Maplewood memo that aggregates activities occurring within 12 to 18 months of each other without also determining whether a substantial relationship exists between the activities. Thus, we disagree with the commenters who asserted that an upper bound timeframe for nonaggregation should be coupled with a lower bound presumption for aggregation. Establishing an upper bound for timing, particularly one which can be refuted, serves to define a reasonable threshold for what is considered not to be a substantial relationship. Furthermore, by making the presumption rebuttable, we are assuring that the decision is not based on timing alone but must also consider the technical and economic relationship that could overturn the presumption.

While we are establishing this 3-year rebuttable presumption for nonaggregation, we are setting forth our view that activities separated by less than three years have no presumption. If activities within this time period are presumed aggregated, there could be numerous physical or operational changes across a plant that are aggregated without any substantial relationship among them. We believe that, even without a presumption, permitting authorities will continue to be able to aggregate activities when it determines that there is a substantial technical or economic relationship among them. We believe that establishing this presumption will help to streamline and provide some added certainty to the permit decision-making

[7] At the same time, the construction of some projects that are substantially related may occur at entirely different times, simply because of funding or other reasons which dictates the projects be phased.

[8] Bridgett K. Ellis, Tennessee Valley Authority, EPA–HQ–OAR–2003–0064–0088.1.

process. This 3-year rebuttable presumption will apply prospectively from the effective date of this notice. At that time, we will begin using this 3-year presumptive timeframe when reviewing activities that postdate the effective date of this notice for aggregation. Furthermore, permitting authorities may also adopt this presumptive timeframe as guidance for their sources.

In applying this presumption, the time period separating physical or operational changes should be calculated based on time of approval (*i.e.*, minor NSR permit issuance). If a permit has not been, or will not be, issued for the physical or operational changes, the time period should be based on when construction commences on the changes.

C. Retention of Current Rule Text

In our 2006 proposal, we proposed to amend our rule definition for ''project'' to provide that ''[p]rojects occurring at the same stationary source that are dependent on each other to be economically or technically viable are considered a single project.'' As discussed earlier in this notice, we have concluded that the terms ''economically viable'' and ''technically viable,'' and what is meant to be economically or technically dependent, are difficult to define clearly and should not be adopted as regulatory bright lines. We are, therefore, not promulgating the proposed rule for aggregation,[9] nor are we adopting the descriptions of technical and economic viability and dependence that were set forth in the 2006 proposal preamble. We believe the statements made in this notice better explain the NSR Aggregation policy and enable permitting authorities and sources to better implement the current rule text without revision.

D. Environmental Impact

We have determined that the aggregation policy set forth in this notice will not significantly affect air quality and not interfere with achievement of the purposes of the NSR program. Although this notice aims to add certainty to some aspects of the process for making aggregation decisions, it is very unlikely to change the aggregation outcomes in the vast majority of instances.

For example, while this policy clearly specifies that the basis for aggregation is a substantial technical or economic relationship, our experience is that most prior aggregation and nonaggregation decisions already relied on technical or economic relationships to a large degree even if it was not clearly specified that this should be the basis, and we expect that they would have continued to do so even absent this action. Moreover, even allowing for the possibility that a future aggregation or nonaggregation decision could, absent this notice, theoretically have been expressed as relying upon factors other than the technical or economic interrelationship of activities (*e.g.*, on timing alone, or the plant's overall basic purpose), it is not a given that such an aggregation decision would have been any different if the reviewing authority had instead examined the technical or economic relationship.

Even under the new 3-year rebuttable presumption for nonaggregation, we do not expect a significant difference in outcome compared to how physical or operational changes would have been aggregated without the presumption. We expect that there would be few cases under the prior aggregation policy where activities divided by three years or more would have been aggregated for purposes of NSR unless there was a strong technical or economic linkage between them. This outcome would be identical under this policy, which allows for the 3-year presumption to be rebutted in such cases. Thus, while the presumption can assist permitting authorities by streamlining the process for aggregation decisions, it is not likely to lead to appreciably different outcomes.

Therefore, we conclude that there would be negligible environmental impact associated with this final action on aggregation.

IV. Project Netting

In our September 14, 2006 proposal, we proposed a regulatory change to enable emissions decreases from a project to be included in the calculation of whether a significant emissions increase will result from the project. We refer to this NSR concept as ''project netting.''[10]

We are not taking action on the proposal rule for project netting at this time. We are still considering whether and how to proceed with the project netting proposal. Until we decide on how to proceed with the 2006 proposal for project netting, there is no change in how the Agency views project netting. Therefore, nothing in the September 2006 proposed amendments on project netting should be taken as establishing any change in the Agency's interpretation of its current rules, nor should any of the statements in the 2006 preamble characterizing our current rules be cited as demonstrating the Agency's interpretation of our current rules.

V. Statutory and Executive Order Reviews

A. Executive Order 12866—Regulatory Planning and Review

This action is not a ''significant regulatory action'' under the terms of Executive Order (EO) 12866 (58 FR 51735, October 4, 1993) and is therefore not subject to review under the EO.

B. Paperwork Reduction Act

This action does not impose any new information collection burden. We are not promulgating any new paperwork requirements (*e.g.*, monitoring, reporting, recordkeeping) as part of this proposed action. However, OMB has previously approved the information collection requirements contained in the existing regulations (40 CFR parts 51 and 52) under the provisions of the Paperwork Reduction Act, 44 U.S.C. 3501 *et seq.,* and has assigned OMB control number 2060–0003. The OMB control numbers for EPA's regulations in 40 CFR are listed in 40 CFR part 9.

C. Regulatory Flexibility Analysis

The Regulatory Flexibility Act (RFA) generally requires an agency to prepare a regulatory flexibility analysis of any rule subject to notice and comment rulemaking requirements under the Administrative Procedure Act or any other statute unless the agency certifies that the rule will not have a significant economic impact on a substantial number of small entities. Small entities include small businesses, small organizations, and small governmental jurisdictions.

For purposes of assessing the impacts of this action on small entities, a ''small entity'' is defined as: (1) A small business as defined by the Small Business Administration's (SBA) regulations at 13 CFR 121.201; (2) a small governmental jurisdiction that is a government of a city, county, town, school district, or special district with a population of less than 50,000; and (3) a small organization that is any not-for-profit enterprise which is independently owned and operated and is not dominant in its field.

After considering the economic impacts of this final action on small entities, I certify that this action will not have a significant economic impact on a substantial number of small entities. In determining whether a rule has a significant economic impact on a

[9] Proposed at §§ 51.165(a)(1)(xxix)(A); 51.166(b)(51)(i); and 52.21(b)(52)(i).

[10] *See* 71 FR 54248–9 for a more complete description of ''project netting.''

substantial number of small entities, the impact of concern is any significant *adverse* economic impact on small entities, since the primary purpose of the regulatory flexibility analyses is to identify and address regulatory alternatives ''which minimize any significant economic impact of the rule on small entities.'' See 5 U.S.C. 603 and 604. Thus, an agency may certify that a rule will not have a significant economic impact on a substantial number of small entities if the rule relieves regulatory burden, or otherwise has a positive economic effect on all of the small entities subject to the rule.

A Regulatory Flexibility Act Screening Analysis (RFASA) developed as part of a 1994 draft Regulatory Impact Analysis (RIA) and incorporated into the September 1995 ICR renewal analysis, showed that the changes to the NSR program due to the 1990 CAA Amendments would not have an adverse impact on small entities. This analysis encompassed the entire universe of applicable major sources that were likely to also be small businesses (approximately 50 ''small business'' major sources). Because the administrative burden of the NSR program is the primary source of the NSR program's regulatory costs, the analysis estimated a negligible ''cost to sales'' (regulatory cost divided by the business category mean revenue) ratio for this source group. Currently, and as reported in the current ICR, there is no economic basis for a different conclusion.

We have therefore concluded that this notice will not increase, and will possibly decrease, the regulatory burden for all affected small entities.

D. Unfunded Mandates Reform Act

This action contains no Federal mandates under the provisions of Title II of the Unfunded Mandates Reform Act of 1995 (UMRA), 2 U.S.C. 1531–1538 for state, local, or tribal governments or the private sector. This final action is not expected to increase the burden imposed upon reviewing authorities. In addition, we believe this notice may actually reduce the regulatory burden associated with the major NSR program by streamlining the NSR applicability decisionmaking process for permitting authorities and regulated entities. Therefore, this action is not subject to the requirements of sections 202 and 205 of the UMRA.

This action is also not subject to the requirements of section 203 of the UMRA because it contains no regulatory requirements that might significantly or uniquely affect small governments. As discussed above, this final rule does not impose any new requirements on small governments.

E. Executive Order 13132—Federalism

Executive Order 13132, entitled ''Federalism'' (64 FR 43255, August 10, 1999), requires EPA to develop an accountable process to ensure ''meaningful and timely input by state and local officials in the development of regulatory policies that have federalism implications.'' ''Policies that have federalism implications'' is defined in the Executive Order to include regulations that have ''substantial direct effects on the states, on the relationship between the national government and the states, or on the distribution of power and responsibilities among the various levels of government.''

This final action does not have federalism implications. It will not have substantial direct effects on the states, on the relationship between the national government and the states, or on the distribution of power and responsibilities among the various levels of government, as specified in Executive Order 13132. In addition, we believe this final action will actually reduce the regulatory burden associated with the major NSR program by streamlining the NSR applicability decisionmaking process for permitting authorities and regulated entities. Thus, Executive Order 13132 does not apply to this action.

In the spirit of Executive Order 13132, and consistent with EPA policy to promote communications between EPA and state and local governments, EPA specifically solicited comments on the proposed rule from state and local officials.

F. Executive Order 13175—Consultation and Coordination With Indian Tribal Governments

This action does not have tribal implications, as specified in Executive Order 13175 (65 FR 67249, November 9, 2000). No tribal government currently has an approved tribal implementation plan (TIP) under the CAA to implement the NSR program; therefore the Federal government is currently the NSR reviewing authority in Indian country. Thus, tribal governments should not experience added burden from this final action, nor should their laws be affected with respect to implementation of this action. Thus, Executive Order 13175 does not apply to this action.

G. Executive Order 13045—Protection of Children From Environmental Health Risks and Safety Risks

EPA interprets Executive Order 13045 (62 FR 19885, April 23, 1997) as applying only to those regulatory actions that concern health or safety risks, such that the analysis required under section 5–501 of the Executive Order has the potential to influence the regulation. This action is not subject to Executive Order 13045 because it does not establish an environmental standard intended to mitigate health or safety risks.

H. Executive Order 13211—Actions Concerning Regulations That Significantly Affect Energy Supply, Distribution, or Use

This action is not subject to Executive Order 13211 (66 FR 28355 (May 22, 2001)), because it is not a significant regulatory action under Executive Order 12866.

I. National Technology Transfer and Advancement Act

Section 12(d) of the National Technology Transfer and Advancement Act of 1995 (NTTAA), Public Law 104–113, 12(d) (15 U.S.C. 272 note), directs EPA to use voluntary consensus standards in its regulatory activities unless to do so would be inconsistent with applicable law or otherwise impractical. Voluntary consensus standards are technical standards (for example, materials specifications, test methods, sampling procedures, and business practices) that are developed or adopted by voluntary consensus standards bodies. The NTTAA directs EPA to provide Congress, through OMB, explanations when the Agency decides not to use available and applicable voluntary consensus standards.

This action does not involve technical standards. Therefore, EPA did not consider the use of any voluntary consensus standards.

J. Executive Order 12898—Federal Actions to Address Environmental Justice in Minority Populations and Low-Income Populations

Executive Order 12898 (59 FR 7629 (Feb. 16, 1994)) establishes Federal executive policy on environmental justice. Its main provision directs Federal agencies, to the greatest extent practicable and permitted by law, to make environmental justice part of their mission by identifying and addressing, as appropriate, disproportionately high and adverse human health or environmental effects of their programs, policies, and activities on minority populations and low-income populations in the United States.

EPA has determined that this final action will not have disproportionately high and adverse human health or environmental effects on minority or

low-income populations because it does not affect the level of protection provided to human health or the environment. This action, in conjunction with other existing programs, would not relax the control measures on sources regulated by the final action and therefore would not cause emissions increases from these sources.

K. Congressional Review Act

The Congressional Review Act, 5 U.S.C. 801 *et seq.,* as added by the Small Business Regulatory Enforcement Fairness Act of 1996, generally provides that before a rule may take effect, the agency promulgating the rule must submit a rule report, which includes a copy of the rule, to each House of the Congress and to the Comptroller General of the United States. EPA will submit a report containing this rule and other required information to the U.S. Senate, the U.S. House of Representatives, and the Comptroller General of the United States prior to publication of the rule in the **Federal Register**. A major rule cannot take effect until 60 days after it is published in the **Federal Register**. This action is not a ''major rule'' as defined by 5 U.S.C. 804(2). This rule will be effective February 17, 2009.

L. Judicial Review

Under CAA section 307(b), judicial review of this final action is available only by filing a petition for review in the U.S. Court of Appeals for the District of Columbia Circuit on or before March 16, 2009. Under CAA section 307(d)(7)(B), only those objections to the final rule that were raised with specificity during the period of public comment may be raised during judicial review. Moreover, under CAA section 307(b)(2), the requirements established by this final rule may not be challenged separately in any civil or criminal proceedings brough by EPA to enforce these requirements.

VI. Statutory Authority

The statutory authority for this action is provided by sections 307(d)(7)(B), 101, 111, 114, 116, and 301 of the CAA as amended (42 U.S.C. 7401, 7411, 7414, 7416, and 7601). This notice is also subject to section 307(d) of the CAA (42 U.S.C. 7407(d)).

List of Subjects

40 CFR Part 51

Environmental protection, Administrative practice and procedure, Air pollution control, Baseline emissions, Intergovernmental relations, Netting, Aggregation, Major modifications, Reporting and recordkeeping requirements.

40 CFR Part 52

Environmental protection, Administrative practice and procedure, Air pollution control, Baseline emissions, Intergovernmental relations, Netting, Aggregation, Major modifications, Reporting and recordkeeping requirements.

Dated: January 12, 2009.

Stephen L. Johnson,

Administrator.

[FR Doc. E9–815 Filed 1–14–09; 8:45 am]

BILLING CODE 6560–50–P

ENVIRONMENTAL PROTECTION AGENCY

40 CFR Part 52

[EPA–R06–OAR–2007–1153; FRL–8762–4]

Approval and Promulgation of Air Quality Implementation Plans; Arkansas; Emissions Inventory for the Crittenden County Ozone Non-Attainment Area; Emissions Statements

AGENCY: Environmental Protection Agency (EPA).

ACTION: Direct final rule.

SUMMARY: The Environmental Protection Agency (EPA) is approving a revision to the Arkansas State Implementation Plan (SIP) to meet the Emissions Inventory and Emissions Statements requirements of the Clean Air Act (CAA) for the Crittenden County ozone nonattainment area. EPA is approving the SIP revision because it satisfies the Emissions Inventory and Emissions Statements requirements for 8-hour ozone nonattainment areas. EPA is approving the revision pursuant to section 110 of the CAA.

DATES: This direct final rule will be effective March 16, 2009 without further notice unless EPA receives adverse comments by February 17, 2009. If adverse comments are received, EPA will publish a timely withdrawal of the direct final rule in the **Federal Register** informing the public that the rule will not take effect.

ADDRESSES: Submit your comments, identified by Docket No. EPA–R06–OAR–2007–1153, by one of the following methods:

- *Federal e-Rulemaking Portal: http://www.regulations.gov.*
- Follow the online instructions for submitting comments.
- *EPA Region 6 ''Contact Us'' Web site: http://epa.gov/region6/r6coment.htm.* Please click on ''6PD (Multimedia)'' and select ''Air'' before submitting comments.
- *E-mail:* Mr. Guy Donaldson at *donaldson.guy@epa.gov.* Please also send a copy by e-mail to the person listed in the **FOR FURTHER INFORMATION CONTACT** section below.
- *Fax:* Mr. Guy Donaldson, Chief, Air Planning Section (6PD–L), at fax number 214–665–7242.
- *Mail:* Mr. Guy Donaldson, Chief, Air Planning Section (6PD–L), Environmental Protection Agency, 1445 Ross Avenue, Suite 1200, Dallas, Texas 75202–2733.
- *Hand or Courier Delivery:* Mr. Guy Donaldson, Chief, Air Planning Section (6PD–L), Environmental Protection Agency, 1445 Ross Avenue, Suite 1200, Dallas, Texas 75202–2733. Such deliveries are accepted only between the hours of 8 a.m. and 4 p.m. weekdays, and not on legal holidays. Special arrangements should be made for deliveries of boxed information.

Instructions: Direct your comments to Docket No. EPA–R06–OAR–2007–1153. EPA's policy is that all comments received will be included in the public docket without change and may be made available online at *www.regulations.gov*, including any personal information provided, unless the comment includes information claimed to be Confidential Business Information (CBI) or other information whose disclosure is restricted by statute. Do not submit information that you consider to be CBI or otherwise protected through *www.regulations.gov* or e-mail. The *www.regulations.gov* Web site is an ''anonymous access'' system, which means EPA will not know your identity or contact information unless you provide it in the body of your comment. If you send an e-mail comment directly to EPA without going through *www.regulations.gov* your e-mail address will be automatically captured and included as part of the comment that is placed in the public docket and made available on the Internet. If you submit an electronic comment, EPA recommends that you include your name and other contact information in the body of your comment and with any disk or CD–ROM you submit. If EPA cannot read your comment due to technical difficulties and cannot contact you for clarification, EPA may not be able to consider your comment. Electronic files should avoid the use of special characters, any form of encryption, and be free of any defects or viruses.

Docket: All documents in the docket are listed in the *www.regulations.gov* index. Although listed in the index,

some information is not publicly available, e.g., CBI or other information whose disclosure is restricted by statute. Certain other material, such as copyrighted material, will be publicly available only in hard copy. Publicly available docket materials are available either electronically in *www.regulations.gov* or in hard copy at the Air Planning Section (6PD–L), Environmental Protection Agency, 1445 Ross Avenue, Suite 700, Dallas, Texas 75202–2733. The file will be made available by appointment for public inspection in the Region 6 FOIA Review Room between the hours of 8:30 a.m. and 4:30 p.m. weekdays except for legal holidays. Contact the person listed in the **FOR FURTHER INFORMATION CONTACT** paragraph below or Mr. Bill Deese at 214–665–7253 to make an appointment. If possible, please make the appointment at least two working days in advance of your visit. There will be a 15 cent per page fee for making photocopies of documents. On the day of the visit, please check in at the EPA Region 6 reception area at 1445 Ross Avenue, Suite 700, Dallas, Texas.

The State submittal is also available for public inspection during official business hours, by appointment, at the Arkansas Department of Environmental Quality, 5301 Northshore Drive, North Little Rock, AR 72118–5317.

FOR FURTHER INFORMATION CONTACT:

Dylan Van Dyne, Air Planning Section (6PD–L), Environmental Protection Agency, Region 6, 1445 Ross Avenue, Suite 700, Dallas, Texas 75202–2733, telephone 214–665–7113; fax number 214–665–7263; e-mail address *vandyne.dylan@epa.gov*.

SUPPLEMENTARY INFORMATION:

Throughout this document, whenever ''we'', ''us'', or ''our'' is used, we mean the EPA.

Outline

I. What Action is EPA Taking?
II. What is a SIP?
III. What is the Background for this Action?
IV. What is EPA's Evaluation of the Revision?
V. Statutory and Executive Order Reviews

I. What Action Is EPA Taking?

We are approving a revision to the Arkansas SIP, submitted to meet the Emissions Inventory and Emissions Statement requirements of the CAA for the Crittenden County 8-hour ozone non-attainment area.[1] The revision was adopted by the State of Arkansas on June 22, 2007, became effective July 15, 2007, and was submitted to EPA on November 19, 2007. We are approving the Emissions Inventory for Crittenden County because it satisfies the Emissions Inventory requirements for 8-hour ozone nonattainment areas classified as marginal or above. We are approving the revisions to the Arkansas Regulations requiring Emissions certification as meeting Emissions Statement requirements of the CAA. We are approving the revision pursuant to section 110 of the CAA.

EPA is publishing this rule without prior proposal because we view this as a noncontroversial amendment and anticipate no relevant adverse comments. However, in the proposed rules section of this **Federal Register** publication, we are publishing a separate document that will serve as the proposal to approve the SIP revision if relevant adverse comments are received. This rule will be effective on March 16, 2009 without further notice unless we receive relevant adverse comment by February 17, 2009. If we receive relevant adverse comments, we will publish a timely withdrawal in the **Federal Register** informing the public that the rule will not take effect. We will address all public comments in a subsequent final rule based on the proposed rule. We will not institute a second comment period on this action. Any parties interested in commenting must do so now. Please note that if we receive adverse comment on an amendment, paragraph, or section of this rule and if that provision may be severed from the remainder of the rule, we may adopt as final those provisions of the rule that are not the subject of an adverse comment.

II. What Is a SIP?

Section 110 of the CAA requires states to develop air pollution regulations and control strategies to ensure that air quality meets the national ambient air quality standards (NAAQS) established by EPA. NAAQS are established under section 109 of the CAA and currently address six criteria pollutants: Carbon monoxide, nitrogen dioxide, ozone, lead, particulate matter, and sulfur dioxide.

A SIP is a set of air pollution regulations, control strategies, other means or techniques, and technical analyses developed by the state, to ensure that the state meets the NAAQS. It is required by section 110 and other provisions of the CAA. A SIP protects air quality primarily by addressing air pollution at its point of origin. A SIP can be extensive, containing state regulations or other enforceable documents, and supporting information such as emissions inventories, monitoring networks, and modeling demonstrations. Each state must submit regulations and control strategies to EPA for approval and incorporation into the federally-enforceable SIP.

III. What Is the Background for This Action?

Inhaling even low levels of ozone, a key component of urban smog, can trigger a variety of health problems including chest pains, coughing, nausea, throat irritation, and congestion. It can also worsen bronchitis and asthma, and reduce lung capacity. Volatile organic compounds (VOC) and oxides of nitrogen (NO_X) are known as ''ozone precursors'', as VOCs react with NO_X, oxygen, and sunlight to form ozone.

EPA promulgated, on July 18, 1997, a revised 8-hour ozone standard of 0.08 parts per million (ppm), which is more protective than the previous 1-hour ozone standard (62 FR 38855).[2] On April 30, 2004 EPA published designations for the 1997 standard 8-hour ozone standard (69 FR 23858). Crittenden County, Arkansas and Memphis, Tennessee were designated as an ozone nonattainment area; and the area was classified as a moderate nonattainment area under subpart 2 with an attainment date of no later than June 15, 2010. On July 15, 2004, pursuant to section 181(a)(4) of the CAA, the States of Tennessee and Arkansas submitted a petition to EPA Regions 4 and 6, requesting a downward reclassification of the area ''moderate'' to ''marginal'' for the 8-hour ozone standard. The petition was approved by EPA on September 22, 2004 (69 FR 56697). As a result of the downward classification, the new attainment date for the area was set at no later than June 15, 2007 (73 FR 15087). The 1997 ozone standard was not attained by this date, so the area was reclassified back to ''moderate'' on March 28, 2008, with a new attainment date of no later than June 15, 2010 (73 FR 16547).

Sections 172(c)(3) and 182(a)(1) of the Clean Air Act (CAA) and EPA's 8-hour ozone regulation (40 CFR 51.915) require submission of an emissions inventory for each 8-hour ozone non-attainment area. An emissions inventory is an estimation of actual emissions of air pollutants in an area. The emissions inventory for an ozone nonattainment area contains nitrogen oxide (NO_X), volatile organic compound (VOC), and carbon monoxide (CO) emissions as these pollutants are precursors to ozone

[1] The Emissions Statement portion of the revision is a statewide rule applying to all counties in Arkansas.

[2] EPA issued a revised 8-hour ozone standard on March 27, 2008 (73 FR 16436). The designation and implementation process for that standard is just starting and does not affect EPA's action here.

formation. In this case, the emissions inventory is for the year 2002.

CAA section 182(a)(3)(B) calls for the SIP to require that owners or operators of each stationary source of NO_X and VOC in an ozone non-attainment area submit an annual emissions statement. The emissions statement must show the actual emissions of NO_X or VOC and contain a certification that the information contained in the statement is accurate to the best knowledge of the individual certifying the statement.

On December 22, 2006, the U.S. Court of Appeals for the District of Columbia Circuit vacated EPA's Phase 1 Rule in *South Coast Air Quality Management Dist.* v. *EPA*, 472 F.3d 882 (DC Cir. 2006). On June 8, 2007, in response to several petitions for rehearing, the court modified the scope of vacatur of the Phase 1 Rule. *See* 489 F.3d 1245 (DC Cir. 2007), *cert. denied*, 128 S.Ct. 1065 (2008). The court vacated those portions of the Phase 1 Rule that provide for regulation of the 1997 8-hour ozone NAAQS in some nonattainment areas under Subpart 1 in lieu of Subpart 2 and that allowed areas to revise their SIPs to no longer require certain programs as they applied for purposes of the 1-hour NAAQS; new source review, section 185 penalties, and contingency plans for failure to meet RFP and attainment milestones. The decision does not affect the requirements for areas classified under subpart 2, such as the Crittenden area, to submit a base year emission inventory for the 1997 8-hour ozone NAAQS. Litigation on the Phase 2 Rule is pending before the D.C. Circuit Court of Appeals.

On November 19, 2007, ADEQ submitted both the 2002 base year emission inventory for the Crittenden County 8-hour ozone non-attainment area and the certification statement requirement that was added to the Arkansas Pollution Control and Ecology Commission's Regulation Number 19 (Regulations of the Arkansas Plan of Implementation for Air Pollution Control). These regulations require each emission inventory is to be accompanied by a certifying statement attesting that the information contained in the inventory is true and accurate to the best knowledge of the certifying official.

IV. What Is EPA's Evaluation of the Revision?

EPA has reviewed the revision for consistency with the requirements of EPA regulations. A summary of EPA's analysis is provided below. For a full discussion of our evaluation, please see our TSD.

A. Crittenden County Has an Approvable Base Year Emissions Inventory

CAA sections 172(c)(3) and 182(a)(1) require an inventory of actual emissions from all sources of relevant pollutants in the nonattainment area. EPA strongly recommended using 2002 as the base year emissions inventory. Arkansas has developed a 2002 base year inventory for the Crittenden County nonattainment area. The 2002 base year emissions inventory includes all point, area, non-road mobile, and on-road mobile source emissions in all of Crittenden County. EPA has determined that the inventory was developed in accordance with EPA guidelines, and that the revised 2002 base year emission inventory is approvable. For more information, see the TSD for this section. Table 1 lists the emissions inventory for the Crittenden County area. For more detail on how emissions inventories were estimated, see the Technical Support Document.

TABLE 1—BASE YEAR EMISSIONS INVENTORY IN TONS PER DAY (TPD)

Source category	VOC	NO_X	CO
Point	2.21	1.05	0.35
Non-Point	7.66	0.84	61.34
On-Road	5.13	7.61	64.57
Non-Road	2.71	11.99	18.02
County total	17.71	21.49	144.28

B. The Arkansas Emissions Statement Regulation Is Approvable

CAA section 182(a)(3)(B) calls for the SIP to require that owners or operators of each stationary source of NO_X and VOC in an ozone non-attainment area submit an annual emissions statement. The emissions statement must show the actual emissions of NO_X or VOC and contain a certification that the information contained in the statement is accurate to the best knowledge of the individual certifying the statement.

Arkansas revised Regulation 19, Chapter 7 (Sampling, Monitoring, and Reporting Requirements), to require emissions statements. Regulation 19.705(D) states, ''Each emission inventory is to be accompanied by a certifying statement, signed by the owner(s) or operator(s) and attesting that the information contained in the inventory is true and accurate to the best knowledge of the certifying official. The certification shall include the full name, title, signature, date of signature, and telephone number of the certifying official.'' This revision is a statewide rule, applying to all counties in Arkansas, not just Crittenden County.

By requiring the owner or operator of each stationary source to submit annual emissions statements of emissions of NO_X and VOCs, the revision to Regulation 19.705 meets the requirements of CAA section 182(a)(3)(B).

V. Statutory and Executive Order Reviews

Under the Clean Air Act, the Administrator is required to approve a SIP submission that complies with the provisions of the Act and applicable Federal regulations. 42 U.S.C. 7410(k); 40 CFR 52.02(a). Thus, in reviewing SIP submissions, EPA's role is to approve state choices, provided that they meet the criteria of the Clean Air Act. Accordingly, this action merely approves state law as meeting Federal requirements and does not impose additional requirements beyond those imposed by state law. For that reason, this action:

- Is not a ''significant regulatory action'' subject to review by the Office of Management and Budget under Executive Order 12866 (58 FR 51735, October 4, 1993);
- Does not impose an information collection burden under the provisions of the Paperwork Reduction Act (44 U.S.C. 3501 *et seq.*);
- Is certified as not having a significant economic impact on a substantial number of small entities under the Regulatory Flexibility Act (5 U.S.C. 601 *et seq.*);
- Does not contain any unfunded mandate or significantly or uniquely affect small governments, as described

in the Unfunded Mandates Reform Act of 1995 (Pub. L. 104–4);

• Does not have Federalism implications as specified in Executive Order 13132 (64 FR 43255, August 10, 1999);

• Is not an economically significant regulatory action based on health or safety risks subject to Executive Order 13045 (62 FR 19885, April 23, 1997);

• Is not a significant regulatory action subject to Executive Order 13211 (66 FR 28355, May 22, 2001);

• Is not subject to requirements of Section 12(d) of the National Technology Transfer and Advancement Act of 1995 (15 U.S.C. 272 note) because application of those requirements would be inconsistent with the Clean Air Act; and

• Does not provide EPA with the discretionary authority to address, as appropriate, disproportionate human health or environmental effects, using practicable and legally permissible methods, under Executive Order 12898 (59 FR 7629, February 16, 1994).

In addition, this rule does not have tribal implications as specified by Executive Order 13175 (65 FR 67249, November 9, 2000), because the SIP is not approved to apply in Indian country located in the state, and EPA notes that it will not impose substantial direct costs on tribal governments or preempt tribal law.

The Congressional Review Act, 5 U.S.C. 801 *et seq.*, as added by the Small Business Regulatory Enforcement Fairness Act of 1996, generally provides that before a rule may take effect, the agency promulgating the rule must submit a rule report, which includes a copy of the rule, to each House of the Congress and to the Comptroller General of the United States. EPA will submit a report containing this action and other required information to the U.S. Senate, the U.S. House of Representatives, and the Comptroller General of the United States prior to publication of the rule in the **Federal Register**. A major rule cannot take effect until 60 days after it is published in the **Federal Register**. This action is not a ''major rule'' as defined by 5 U.S.C. 804(2).

Under section 307(b)(1) of the Clean Air Act, petitions for judicial review of this action must be filed in the United States Court of Appeals for the appropriate circuit by March 16, 2009. Filing a petition for reconsideration by the Administrator of this final rule does not affect the finality of this action for the purposes of judicial review nor does it extend the time within which a petition for judicial review may be filed, and shall not postpone the effectiveness of such rule or action. This action may not be challenged later in proceedings to enforce its requirements. (*See* section 307(b)(2).)

List of Subjects in 40 CFR Part 52

Environmental protection, Air pollution control, Incorporation by reference, Intergovernmental relations, Nitrogen oxides, Ozone, Volatile organic compounds.

Dated: December 24, 2008.

Richard E. Greene,

Regional Administrator, Region 6.

■ 40 CFR part 52 is amended as follows:

PART 52—[AMENDED]

■ 1. The authority citation for part 52 continues to read as follows:

Authority: 42 U.S.C. 7401 *et seq.*

Subpart E—Arkansas

■ 2. Section 52.170 is amended as follows:

■ a. The table in paragraph (c) entitled ''EPA Approved Regulations in the Arkansas SIP'' is amended by revising the entry for Reg. 19.705;

■ b. Paragraph (e) is amended by adding a new table entitled ''EPA Approved Nonregulatory Provisions and Quasi-Regulatory Measures in the Arkansas SIP'' and an entry for the Crittenden County Emissions Inventory.

The revision and addition reads as follows:

§ 52.170 Identification of plan.

* * * * *

(c) * * *

EPA APPROVED REGULATIONS IN THE ARKANSAS SIP

State citation	Title/subject	State submittal/effective date	EPA approval date	Comments
* *	*	*	*	* *
Reg. 19.705	Recordkeeping and Reporting Requirements.	6/22/07	1/15/09 [Insert *FR* page number where document begins].	
* *	*	*	*	* *

(e) * * *

* * * * *

EPA APPROVED NONREGULATORY PROVISIONS AND QUASI-REGULATORY MEASURES IN THE ARKANSAS SIP

Name of SIP provision	Applicable geographic or non-attainment area	State approval/submittal date	EPA approval date	Comments
Emissions Inventory for Crittenden County.	Crittenden County	6/22/07	1/15/09 [Insert *FR* page number where document begins].	

[FR Doc. E9–618 Filed 1–14–09; 8:45 am]
BILLING CODE 6560–50–P

ENVIRONMENTAL PROTECTION AGENCY

40 CFR Part 52

[EPA–R06–OAR–2006–0357; FRL–8761–4]

Approval and Promulgation of Air Quality Implementation Plans; Texas; Approval of the Section 110(a)(1) Maintenance Plan for the 1997 8-Hour Ozone Standard for El Paso County

AGENCY: Environmental Protection Agency (EPA).

ACTION: Direct final rule.

SUMMARY: EPA is taking direct final action approving a revision to the Texas State Implementation Plan (SIP). The revision consists of a maintenance plan for El Paso County developed to ensure continued attainment of the 1997 8-hour ozone National Ambient Air Quality Standard (NAAQS) through the year 2014. The Maintenance Plan meets the statutory and regulatory requirements, and is consistent with EPA's guidance. EPA is approving the revision pursuant to section 110 of the Federal Clean Air Act (CAA).

DATES: This rule is effective on March 16, 2009 without further notice, unless EPA receives relevant adverse comment by February 17, 2009. If EPA receives such comment, EPA will publish a timely withdrawal in the **Federal Register** informing the public that this rule will not take effect.

ADDRESSES: Submit your comments, identified by Docket No. EPA–R06–OAR–2006–0357, by one of the following methods:

- *Federal eRulemaking Portal: http://www.regulations.gov*. Follow the on-line instructions for submitting comments.
- *EPA Region 6 ''Contact Us'' Web site: http://epa.gov/region6/r6coment.htm*. Please click on ''6PD'' (Multimedia) and select ''Air'' before submitting comments.
- *E-mail:* Mr. Guy Donaldson at *donaldson.guy@epa.gov*. Please also send a copy by e-mail to the person listed in the **FOR FURTHER INFORMATION CONTACT** section below.
- *Fax:* Mr. Guy Donaldson, Chief, Air Planning Section (6PD–L), at fax number 214–665–7263.
- *Mail:* Mr. Guy Donaldson, Chief, Air Planning Section (6PD–L), Environmental Protection Agency, 1445 Ross Avenue, Suite 1200, Dallas, Texas 75202–2733.
- *Hand or Courier Delivery:* Mr. Guy Donaldson, Chief, Air Planning Section (6PD–L), Environmental Protection Agency, 1445 Ross Avenue, Suite 1200, Dallas, Texas 75202–2733. Such deliveries are accepted only between the hours of 8 a.m. and 4 p.m. weekdays except for legal holidays. Special arrangements should be made for deliveries of boxed information.

Instructions: Direct your comments to Docket ID No. EPA–R06–OAR–2006–0357. EPA's policy is that all comments received will be included in the public docket without change and may be made available online at *www.regulations.gov*, including any personal information provided, unless the comment includes information claimed to be Confidential Business Information (CBI) or other information whose disclosure is restricted by statute. Do not submit information that you consider to be CBI or otherwise protected through *www.regulations.gov* or e-mail. The *www.regulations.gov* Web site is an ''anonymous access'' system, which means EPA will not know your identity or contact information unless you provide it in the body of your comment. If you send an e-mail comment directly to EPA without going through *www.regulations.gov* your e-mail address will be automatically captured and included as part of the comment that is placed in the public docket and made available on the Internet. If you submit an electronic comment, EPA recommends that you include your name and other contact information in the body of your comment and with any disk or CD–ROM you submit. If EPA cannot read your comment due to technical difficulties and cannot contact you for clarification, EPA may not be able to consider your comment. Electronic files should avoid the use of special characters, any form of encryption, and be free of any defects or viruses.

Docket: All documents in the docket are listed in the *www.regulations.gov* index. Although listed in the index, some information is not publicly available, *e.g.*, CBI or other information whose disclosure is restricted by statute. Certain other material, such as copyrighted material, will be publicly available only in hard copy. Publicly available docket materials are available either electronically in *www.regulations.gov* or in hard copy at the Air Planning Section (6PD–L), Environmental Protection Agency, 1445 Ross Avenue, Suite 700, Dallas, Texas 75202–2733.

The file will be made available by appointment for public inspection in the Region 6 FOIA Review Room between the hours of 8:30 a.m. and 4:30 p.m. weekdays except for legal holidays. Contact the person listed in the **FOR FURTHER INFORMATION CONTACT** paragraph below or Mr. Bill Deese at 214–665–7253 to make an appointment. If possible, please make the appointment at least two working days in advance of your visit. There will be a 15 cent per page fee for making photocopies of documents. On the day of the visit, please check in at the EPA Region 6 reception area at 1445 Ross Avenue, Suite 700, Dallas, Texas.

The State submittal is also available for public inspection at the State Air Agency listed below during official business hours by appointment:

Texas Commission on Environmental Quality, Office of Air Quality, 12124 Park 35 Circle, Austin, Texas 78753.

FOR FURTHER INFORMATION CONTACT: Jeffrey Riley, Air Planning Section (6PD–L), Environmental Protection Agency, Region 6, 1445 Ross Avenue, Suite 700, Dallas, Texas 75202–2733, telephone 214–665–8542; fax number 214–665–7263; e-mail address *riley.jeffrey@epa.gov*.

SUPPLEMENTARY INFORMATION: Throughout this document, whenever ''we'' ''us'' or ''our'' is used, we mean the EPA.

Outline

I. What Is the Action EPA Is Taking?
II. What Is the Background for This Action?
III. What Is EPA's Analysis of the State's Submittal?
IV. What Preconstruction Permitting Program Applies in the Area?
V. Final Action
VI. Statutory and Executive Order Reviews

I. What Is the Action EPA Is Taking?

EPA is approving a revision to the Texas SIP. The revision is a 1997 8-hour ozone NAAQS maintenance plan for El Paso County. The State of Texas, through the Texas Commission on Environmental Quality (TCEQ), submitted the 1997 8-hour ozone NAAQS maintenance plan for El Paso County to EPA on January 20, 2006. EPA is approving the maintenance plan SIP revision for El Paso County as meeting the requirements of CAA Section 110(a)(1) and EPA's regulations under 40 CFR 51.905(c) and (d) and being consistent with EPA guidance. The maintenance plan is designed to help keep the El Paso area in attainment for the 8-hour ozone NAAQS through the year 2014.

II. What Is the Background for This Action?

Under the 1990 CAA Amendments, El Paso County continued to be designated nonattainment for the 1-hour ozone NAAQS by operation of law and was

classified as a serious nonattainment area (*see* 56 FR 56694). El Paso County has unique considerations for ozone attainment planning due to airshed contributions from Ciudad Juarez, Mexico. Under Section 179B of the Act, the EPA approved the 1-hour ozone standard attainment demonstration SIP for El Paso County on June 10, 2004 (*see* 69 FR 32450). TCEQ established to the EPA's satisfaction that implementation of the plan would achieve timely attainment of the 1-hour ozone NAAQS but for emissions emanating from Ciudad Juarez.

EPA also found the El Paso area would attain by November 15, 1996, earlier than the attainment deadline of November 15, 1999. Due to this finding, and the State's enforceable commitment to perform basin-wide modeling whenever the necessary Juarez information became available, the requirement for a post-1996 plan with an additional 9 percent of reductions from November 1996 through November 1999 was deferred. This approval of the section 179B attainment demonstration SIP and deferral of the post-1996 plan was contingent; valid only as long as the area's modeling data continued to show that the El Paso 1-hour ozone area would be in attainment of the 1-hour NAAQS, but for emissions from outside the United States.

TCEQ submitted all the other requirements for a 1-hour ozone nonattainment area classified as serious and EPA approved them as follows:

Description	Date of approval	**Federal Register** Notice
15% Rate of Progress (ROP) Plan	November 10, 1998	63 FR 62943.
1990 base year Emissions Inventory	November 8, 1994	59 FR 55589.
Periodic Inventory	Most Recent: December 2, 2004 (letter from TCEQ).	
Emissions Statements	August 26, 1994	59 FR 44036.
Enhanced I/M	August 22, 1994, revised	59 FR 43046.
	November 14, 2001	66 FR 57261.
VOC Reasonably Available Control Technology (RACT)	March 7, 1995, revised	60 FR 12438.
	October 1996	61 FR 55897.
	January 26, 1999	64 FR 3841.
	March 15, 1999	64 FR 12759.
	December 22, 1999	64 FR 71666.
	September 5, 2000	65 FR 53595.
	December 20, 2000	65 FR 79745.
	July 16, 2001	66 FR 36913.
New Source Review (NSR)	September 27, 1995	60 FR 49781.
Offset requirement	October 30, 1996	61 FR 55894.
Reid Vapor Pressure	March 7, 1995	60 FR 12438.
Stage II Vapor Control	April 15, 1994, revised	59 FR 17940.
	March 29, 2005	70 FR 15769.
Clean Fuel Vehicle Program	February 7, 2001	66 FR 9203.
Transportation Control Measures	November 10, 1998	63 FR 62943.
Enhanced Monitoring	October 4, 1994	59 FR 50504.
Failure-to-meet ROP and attainment contingency measures	May 22, 1997	62 FR 27964.
NO_X Waiver	November 28, 1994	59 FR 60714.

On April 30, 2004, EPA designated and classified areas for the 1997 8-hour ozone NAAQS (69 FR 23858), and published the final Phase 1 rule for implementation of the 1997 ozone NAAQS (69 FR 23951). El Paso County was designated as unclassifiable/attainment for the 1997 ozone standard, effective June 15, 2004 (*see* 69 FR 23858). Consequently, this attainment area is required to submit a 10-year maintenance plan under section 110(a)(1) of the CAA and the Phase 1 rule. On May 20, 2005, EPA issued guidance providing information regarding how a state might fulfill the maintenance plan obligation established by the Act and the Phase 1 rule (Memorandum from Lydia N. Wegman to Air Division Directors, *Maintenance Plan Guidance Document for Certain 8-hour Ozone Areas Under Section 110(a)(1) of Clean Air Act, May 20, 2005*). On January 20, 2006, Texas submitted a 1997 8-hour ozone standard maintenance plan for El Paso County to EPA. This SIP revision satisfies the section 110(a)(1) CAA requirements for a plan that provides for implementation, maintenance, and enforcement of the 1997 8-hour ozone NAAQS in the El Paso County unclassifiable/attainment area.

On December 22, 2006, the United States Court of Appeals for the District of Columbia Circuit issued an opinion that vacated EPA's Phase 1 Implementation Rule for the 1997 8-Hour Ozone Standard. (*South Coast Air Quality Management District*. v. *EPA*, 472 F.3d 882 (DCCir. 2006). Petitions for rehearing were filed with the Court, and on June 8, 2007, the Court modified the scope of the vacatur of the Phase 1 rule. See 489 F.3d 1245 (DC Cir. 2007), *cert. denied*, 128 S.Ct. 1065 (2008). The Court vacated those portions of the Rule that provide for regulation of the 1997 8-hour ozone NAAQS nonattainment areas under Subpart 1 in lieu of Subpart 2 and that allowed areas to revise their SIPs to no longer require certain programs as they applied for purposes of the 1-hour NAAQS; new source review, section 185 penalties, and contingency plans for failure to meet RFP and attainment milestones. Consequently, the Court's modified ruling does not alter any requirements under the Phase 1 implementation rule for the 1997 8-hour ozone NAAQS for maintenance plans.

The Phase 1 Rule also provided that for an area like El Paso, any outstanding obligations to provide SIP revisions concerning attainment demonstration and Rate of Progress (ROP) Plan for the 1-hour ozone NAAQS would no longer be required as long as the area continues to maintain the 8-hour standard. If the 8-hour standard is violated prior to the area having an approved 8-hour maintenance plan under section 110(a)(1), the area would be required to submit a SIP revision to address the deferred post-1996 ROP plan. The area is not violating either the 1-hour or 8-hour standard, and upon the effective date of our approval of the 8-hour ozone maintenance plan, there no longer will be a potential outstanding requirement

to submit a 1-hour ozone post-1996 ROP Plan for the El Paso 1-hour ozone nonattainment area.[1]

III. What Is EPA's Analysis of the State's Submittal?

On January 20, 2006, the State of Texas submitted a SIP revision containing a maintenance plan for the 1997 ozone NAAQS for El Paso County. The January revision provides a 1997 ozone NAAQS maintenance plan, as required by section 110(a)(1) of the CAA and the provisions of EPA's Phase 1 Implementation Rule (*see* 40 CFR 51.905(a)(4)). The purpose of the plan is to ensure continued attainment and maintenance of the 1997 ozone NAAQS in El Paso County.

In this action, EPA is approving the State's maintenance plan for the 1997 ozone NAAQS for the area of El Paso County because EPA finds that the TCEQ submittal meets the requirements of section 110(a)(1) of the CAA, EPA's rule, and is consistent with EPA's guidance. As required, the plan provides for continued attainment and maintenance of the 1997 ozone NAAQS in the area for 10 years from the effective date of the area's designation as unclassifiable/attainment for the 1997 ozone NAAQS, and includes components illustrating how the area will continue in attainment of the 1997 ozone NAAQS and contingency measures. Each of the section 110(a)(1) plan components is discussed below.

(a) Attainment Inventory—The TCEQ developed comprehensive inventories of VOC and NO_X emissions from area, stationary, and mobile sources using 2002 as the base year to demonstrate maintenance of the 1997 ozone NAAQS for El Paso County. The year 2002 is an appropriate year for the TCEQ to base attainment level emissions because States may select any one of the three years on which the 8-hour attainment designation for the 1997 ozone NAAQS was based (2001, 2002, and 2003). The State's submittal contains the detailed inventory data and summaries by source category. The 2002 base year inventory is a good choice. Using the 2002 inventory as a base year reflects one of the years used for calculating the air quality design values on which the 8-hour ozone designation decisions were based. It also is one of the years in the 2002–2004 period used to establish baseline visibility levels for the regional haze program.

A practical reason for selecting 2002 as the base year emission inventory is that Section 110(a)(2)(B) of the CAA and the Consolidated Emissions Reporting Rule (67 FR 39602, June 10, 2002) require States to submit emissions inventories for all criteria pollutants and their precursors every three years, on a schedule that includes the emissions year 2002. The due date for the 2002 emissions inventory is established in the rule as June 2004. In accordance with these requirements, the State of Texas compiles a statewide EI for point sources on an annual basis. For stationary point sources, for El Paso County, the TCEQ provided estimates for each commercial or industrial operation that emits 50 tons or more per year of VOC or NO_X in Appendix B of the maintenance plan. This data is quality assured and entered into the State of Texas Air Reporting System (STARS). Projections for 2008 and 2014 were developed using the August 2005 Texas Industrial Production Index (TIPI) derived growth factors, supplemented with Economic Growth Analysis System version 4.0 (EGAS 4.0). Stationary non-point source data was grown by using EGAS 4.0, and On-road mobile emissions of VOC and NO_X were estimated using EPA's MOBILE6.2 motor vehicle emissions factor computer model. Non-road mobile projections were developed with EPA's NONROAD model, with the exception of aircraft, airport ground support equipment, and locomotives. For these categories, the 2002 Periodic Emissions Inventory was grown to 2008 and 2014 using EGAS 4.0 growth factors, and the Federal Aviation Administration's Dispersion Modeling System (EDMS) model was used to develop aircraft emissions projections. EPA finds that the TCEQ prepared the 2002 base year emissions inventories and projected data to the years 2008 and 2014, for the area consistent with EPA's long-established guidance memoranda.

The following table provides VOC and NO_X emissions data for the 2002 base attainment year inventory, as well as projected VOC and NO_X emission inventory data for the years 2008 and 2014. Please see the Technical Support Document (TSD) for additional emissions inventory data including projections by source category.

VOC AND NO_X EMISSIONS INVENTORY BASELINE (2002) AND PROJECTIONS (2008 AND 2014)

Emissions	2002 tons per day	2008 tons per day	2014 tons per day
Total VOC	52.44	47.53	44.61
Total NO_X	60.87	49.01	36.89

As shown in the Table above, total VOC and total NO_X emissions for El Paso County are expected to decrease over the 10-year period of the maintenance plan. Please see the TSD for more information on EPA's analysis and review of the State's methodologies, modeling data and performance, etc. for developing the base and attainment year inventories. The State has demonstrated that the future year 1997 8-hour ozone emissions will be less than the 2002 base attainment year's emissions. The attainment inventories submitted by the TCEQ for this area are consistent with the criteria as discussed in the EPA Maintenance Plan Guidance memo dated May 20, 2005 and in other guidance documents (please see the docket for additional information). EPA finds that the future emissions levels in 2008 and 2014 are expected to be less than emissions levels in 2002.

(b) Maintenance Demonstration—The primary purpose of a maintenance plan is to demonstrate how an area will continue to remain in compliance with the 1997 ozone standard for the 10 year period following the effective date of designation as unclassifiable/attainment. The end projection year is 10 years from the effective date of the attainment designation for the 1997 ozone NAAQS, which for El Paso County was June 15, 2004. Therefore, the plan must demonstrate attainment through 2014. As discussed in section (a) Attainment Inventory above, Texas has identified the level of ozone-forming

[1] Monitors in El Paso County currently reflect attainment of the 1-hour ozone NAAQS (2002–2004 data). The State, however, did not submit a request for redesignation of the area to attainment for the 1-hour ozone standard and a section 175A maintenance plan. Because the area was never redesignated to attainment, the area must continue to meet the 1-hour ozone serious area applicable requirements (see 40 CFR 51.905(a)(3) and Section IV).

emissions in El Paso County that was consistent with attainment of the NAAQS for ozone in 2002. Texas has projected VOC and NO_X emissions for the years 2008 and 2014 in El Paso County and EPA finds that the future emissions levels in those years are expected to be below the emissions levels in 2002. Please see the TSD for more information on EPA's review and evaluation of the State's methodologies, modeling, inputs, etc., for developing the 2008 and 2014 projected emissions inventories.

This demonstration shows compliance and maintenance of the 1997 8-hour ozone standard by assuring that current and future emissions of VOC and NO_X remain at or below attainment or baseline EI of 2002. The year 2002 was chosen as the baseline year because it is one of the most recent three years (*i.e.*, 2002, 2003, and 2004) for which the El Paso area has clean air quality data for the 8-hour ozone standard. It includes future inventory projected years for 2008 and 2014. The plan identifies an ''out year,'' at least 10 years after the effective date of classification. EPA finds that the future emissions levels in 2008 and 2014 are expected not to exceed the emissions levels in 2002.

(c) Monitoring Network—The State of Texas has committed in its maintenance plan to continue operation of an appropriate ozone monitoring network and to work with EPA in compliance with 40 CFR part 58 with regard to the continued adequacy of such a network, if additional monitoring is needed, and when monitoring can be discontinued.

In El Paso County, there are six monitoring sites, each of which has monitored attainment with the 1997 ozone standard from 2002 through 2007. The 1997 ozone NAAQS is 0.08 parts per million based on the three-year average of the fourth-highest daily maximum 8-hour average ozone concentration measured at each monitor within an area. The 1997 ozone standard is considered to be attained at 84 parts per billion (ppb). The three most recent 8-hour ozone design values for El Paso County are 76 ppb for 2005, 78 ppb for 2006, and 79 ppb for 2007.

(d) Contingency Plan—The section 110(a)(1) maintenance plan includes contingency provisions to correct promptly any violation of the 1997 ozone NAAQS that occurs. The contingency indicator is based upon monitoring data. The triggering mechanism for activation of contingency measures is a monitoring violation of the 1997 8-hour ozone standard. In the maintenance plan, if contingency measures are triggered, TCEQ is committing to implement the measures as expeditiously as practicable but no longer than 24 months following the trigger. Because the area can be influenced by transport from outside the area (*e.g.*, emissions from Mexico), the State will notify the EPA if the violation was caused by actions outside TCEQ's jurisdiction.

The following contingency measures are identified for implementation:

- Vent gas control.
- Control of emissions from degassing or cleaning of stationary, marine, and transport vehicles.
- Control of emissions from petroleum dry cleaning systems.
- Other measures deemed appropriate at the time because of advances in control technologies.

These contingency measures and schedules for implementation satisfy EPA's long-standing guidance on the requirements of section 110(a)(1) of Continued Attainment. Based on the above, we find that the contingency measures provided in the State's El Paso 8-hour Ozone maintenance plan are sufficient and meet the requirements of section 110(a)(1) of the CAA.

(e) Verification of Continued Attainment—Texas commits to track the progress of the maintenance plan by continuing to periodically update the EI. It will compare the updated EIs against the projected 2008 and 2014 EIs. In addition, Texas commits to verify the 8-hour ozone status through appropriate ambient air quality monitoring, and to quality assure air quality monitoring data according to federal requirements.

IV. What Preconstruction Permitting Program Applies in the Area?

As discussed previously in Section II, although the monitoring data shows that the area is meeting both the 1-hour and 8-hour ozone standards, the State did not submit a request for redesignation of the area to attainment for the 1-hour ozone standard before EPA revoked this standard. Because the area was never redesignated to attainment for the 1-hour standard, the area must continue to meet the applicable 1-hour ozone serious area measures. These mandatory measures include the serious nonattainment area NSR permitting program.

40 CFR 51.905(a)(3) 8-Hour NAAQS Attainment/1-Hour NAAQS Nonattainment of EPA's Phase 1 implementation rule, however, provides that the State may request that the Nonattainment New Source Review program no longer apply in an area such as El Paso. If the State submits to EPA a request to remove the NNSR program from the El Paso Ozone SIP and replace it with the State's prevention of significant deterioration (PSD) SIP, a section 110(l) demonstration would need to be included with the request.

If Texas chooses to submit such a request, the request must include all necessary supporting elements, *e.g.*, a section 110(l) demonstration, any necessary regulatory revisions. Please note that the Texas PSD SIP requirements would apply in the El Paso ozone area only upon the effective date of an EPA action approving the removal from the El Paso ozone SIP of the NNSR SIP program.

V. Final Action

Pursuant to section 110 of the Act, EPA is approving the 1997 8-hour ozone maintenance plan for El Paso County. We have evaluated the State's submittal and have determined that it meets the applicable requirements of the Clean Air Act and EPA regulations, and is consistent with EPA policy.

EPA is publishing this rule without prior proposal because we view this as a non-controversial amendment and anticipate no adverse comments. However, in the proposed rules section of this **Federal Register** publication, we are publishing a separate document that will serve as the proposal to approve the SIP revision if relevant adverse comments are received. This rule will be effective on March 16, 2009 without further notice unless we receive adverse comment by February 17, 2009. If we receive adverse comments, we will publish a timely withdrawal in the **Federal Register** informing the public that the rule will not take effect. We will address all public comments in a subsequent final rule based on the proposed rule. We will not institute a second comment period on this action. Any parties interested in commenting must do so now. Please note that if we receive adverse comment on an amendment, paragraph, or section of this rule and if that provision may be severed from the remainder of the rule, we may adopt as final those provisions of the rule that are not the subject of an adverse comment.

VI. Statutory and Executive Order Reviews

Under Executive Order 12866 (58 FR 51735, October 4, 1993), this action is not a ''significant regulatory action'' and therefore is not subject to review by the Office of Management and Budget. For this reason and because this action will not have a significant, adverse effect on the supply, distribution, or use of energy, this action is also not subject to Executive Order 13211, ''Actions Concerning Regulations That

Significantly Affect Energy Supply, Distribution, or Use'' (66 FR 28355, May 22, 2001). This action merely approves state law as meeting Federal requirements and imposes no additional requirements beyond those imposed by state law. Accordingly, the Administrator certifies that this rule will not have a significant economic impact on a substantial number of small entities under the Regulatory Flexibility Act (5 U.S.C. 601 *et seq.*). Because this rule approves pre-existing requirements under state law and does not impose any additional enforceable duty beyond that required by state law, it does not contain any unfunded mandate or significantly or uniquely affect small governments, as described in the Unfunded Mandates Reform Act of 1995 (Pub. L. 104–4).

This rule also does not have tribal implications because it will not have a substantial direct effect on one or more Indian tribes, on the relationship between the Federal Government and Indian tribes, or on the distribution of power and responsibilities between the Federal Government and Indian tribes, as specified by Executive Order 13175 (65 FR 67249, November 9, 2000). This action also does not have Federalism implications because it does not have substantial direct effects on the States, on the relationship between the national government and the States, or on the distribution of power and responsibilities among the various levels of government, as specified in Executive Order 13132 (64 FR 43255, August 10, 1999). This action merely approves a state rule implementing a Federal standard, and does not alter the relationship or the distribution of power and responsibilities established in the CAA. This rule also is not subject to Executive Order 13045 ''Protection of Children from Environmental Health Risks and Safety Risks'' (62 FR 19885, April 23, 1997), because it is not economically significant. Executive Order 12898 (59 FR 7629, February 16, 1994) establishes federal executive policy on environmental justice. Because this rule merely approves a state rule implementing a Federal standard, EPA lacks the discretionary authority to modify today's regulatory decision on the basis of environmental justice considerations.

In reviewing SIP submissions, EPA's role is to approve state choices, provided that they meet the criteria of the CAA. In this context, in the absence of a prior existing requirement for the State to use voluntary consensus standards (VCS), EPA has no authority to disapprove a SIP submission for failure to use VCS. It would thus be inconsistent with applicable law for EPA, when it reviews a SIP submission, to use VCS in place of a SIP submission that otherwise satisfies the provisions of the CAA. Thus, the requirements of section 12(d) of the National Technology Transfer and Advancement Act of 1995 (15 U.S.C. 272 note) do not apply. This rule does not impose an information collection burden under the provisions of the Paperwork Reduction Act of 1995 (44 U.S.C. 3501 *et seq.*).

The Congressional Review Act, 5 U.S.C. section 801 *et seq.*, as added by the Small Business Regulatory Enforcement Fairness Act of 1996, generally provides that before a rule may take effect, the agency promulgating the rule must submit a rule report, which includes a copy of the rule, to each House of the Congress and to the Comptroller General of the United States. EPA will submit a report containing this rule and other required information to the U.S. Senate, the U.S. House of Representatives, and the Comptroller General of the United States prior to publication of the rule in the **Federal Register**. A major rule cannot take effect until 60 days after it is published in the **Federal Register**. This action is not a ''major rule'' as defined by 5 U.S.C. section 804(2).

Under section 307(b)(1) of the CAA, petitions for judicial review of this action must be filed in the United States Court of Appeals for the appropriate circuit by March 16, 2009. Filing a petition for reconsideration by the Administrator of this final rule does not affect the finality of this rule for the purposes of judicial review nor does it extend the time within which a petition for judicial review may be filed, and shall not postpone the effectiveness of such rule or action. This action may not be challenged later in proceedings to enforce its requirements. (See section 307(b)(2).)

List of Subjects in 40 CFR Part 52

Environmental protection, Air pollution control, Incorporation by reference, Intergovernmental relations, Ozone, Nitrogen dioxides, Reporting and recordkeeping requirements, Volatile organic compounds.

Dated: December 31, 2008.

Richard E. Greene,

Regional Administrator, Region 6.

■ 40 CFR part 52 is amended as follows:

PART 52—[AMENDED]

■ 1. The authority citation for part 52 continues to read as follows:

Authority: 42 U.S.C. 7401 *et seq.*

Subpart SS—Texas

■ 2. In § 52.2270, the second table in paragraph (e) entitled ''EPA Approved Nonregulatory Provisions and Quasi-Regulatory Measures in the Texas SIP,'' is amended by adding an entry at the end of the table to read as follows:

§ 52.2270 Identification of plan.

* * * * *

(e) * * *

EPA APPROVED NONREGULATORY PROVISIONS AND QUASI-REGULATORY MEASURES IN THE TEXAS SIP

Name of SIP provision	Applicable geographic or nonattainment area	State submittal/ effective date	EPA approval date	Comments
*	*	*	*	*
El Paso County 1997 8-Hour Ozone Maintenance Plan.	El Paso, TX	1/11/06	1/15/09 [Insert FR page number where document begins].	

■ 3. Section 52.2275 is amended by adding a new paragraph (g) to read as follows:

§ 52.2275 Control strategy and regulations: Ozone.

* * * * *

(g) Approval. The Texas Commission on Environmental Quality (TCEQ) submitted a 1997 8-hour ozone NAAQS maintenance plan for the area of El Paso County on January 20, 2006. The area is designated unclassifiable/attainment for the 1997 8-hour ozone standard. EPA determined this request for El Paso County was complete on June 13, 2006. The maintenance plan meets the requirements of section 110(a)(1) of the Clean Air Act and is consistent with

EPA's maintenance plan guidance document dated May 20, 2005. The EPA therefore approved the 1997 8-hour ozone NAAQS maintenance plan for the area of El Paso County on January 15, 2009.

[FR Doc. E9–708 Filed 1–14–09; 8:45 am]

BILLING CODE 6560–50–P

ENVIRONMENTAL PROTECTION AGENCY

40 CFR Part 52

[FRL–8762–7]

Finding of Failure To Submit State Implementation Plans Required by the 1999 Regional Haze Rule

AGENCY: Environmental Protection Agency (EPA).

ACTION: Final rule.

SUMMARY: The EPA is taking a final action finding that 37 states, the District of Columbia, and the U.S. Virgin Islands have failed to submit for EPA review and approval State Implementation Plans (SIPs) for improving visibility in the nation's national parks and wilderness areas. Under the Clean Air Act (CAA) and EPA's implementing regulations, states were required to submit these SIPs to EPA by December 17, 2007. These SIPs must contain a number of elements, including importantly: For each mandatory Class I federal area in a state, reasonable progress goals providing for an improvement in visibility for the most impaired days and ensuring no degradation in visibility for the least impaired days; a long-term strategy for improving visibility, including enforceable emissions limitations, for meeting the reasonable progress goals; and Best Available Retrofit Technology (BART) determinations for certain older existing stationary sources. By this action, the EPA is making a finding of failure to submit for those states that have not submitted a SIP or have submitted a SIP that addresses only part of the requirements.

DATES: *Effective Date:* This action is effective on January 15, 2009.

FOR FURTHER INFORMATION CONTACT: General questions concerning this notice should be addressed to Mr. Todd Hawes, Office of Air Quality Planning and Standards, Air Quality Policy Division, *Mail Code:* C539–04, 109 TW Alexander Drive, Research Triangle Park, NC 27709; telephone (919) 541–5591.

SUPPLEMENTARY INFORMATION: For questions related to a specific state please contact the appropriate regional office:

Regional offices	States
Anne Arnold, Manager, Air Quality Planning Unit, EPA New England, I Congress Street, Suite 1100 (CAQ), Boston, MA 02114–2023.	Connecticut, Maine, Massachusetts, New Hampshire, Rhode Island, Vermont.
Raymond Werner, Chief, Air Programs Branch, EPA Region II, 290 Broadway, 25th Floor, New York, NY 10007–1866.	New Jersey, New York, Virgin Islands.
Christina Fernandez, Chief, Air Quality Planning Branch, EPA Region III, 1650 Arch Street, Philadelphia, PA 19103–2187.	District of Columbia, Maryland, Pennsylvania, Virginia.
Dick A. Schutt, Chief, Air Planning Branch, EPA Region IV, Sam Nunn Atlanta Federal Center, 61 Forsyth, Street, SW., 12th Floor, Atlanta, GA 30303.	Florida, Georgia.
Jay Bortzer, Chief, Air Programs Branch, EPA Region V, 77 West Jackson Street, Chicago, IL 60604.	Illinois, Indiana, Michigan, Minnesota, Ohio, Wisconsin.
Tom Diggs, Associate Director Air Programs, EPA Region VI, 1445 Ross Avenue, Dallas, TX 75202–2733.	Oklahoma, New Mexico, Texas.
Joshua A. Tapp, Chief, Air Programs Branch, EPA Region VII, 901 North 5th Street, Kansas City, Kansas 66101–2907.	Kansas, Nebraska.
Monica S. Morales, Unit Chief, Air Quality Planning Unit, EPA Region VIII Air Program, 1595 Wynkoop St. (8P–AR), Denver, CO 80202–1129.	Colorado, Montana, North Dakota, South Dakota, Wyoming.
Lisa Hanf, Chief, Air Planning Office, EPA Region IX, 75 Hawthorne Street, San Francisco, CA 94105.	Arizona, California, Hawaii, Nevada.
Mahbubul Islam, Manager, State and Tribal Air Programs, EPA Region X, Office of Air, Waste, and Toxics, Mail Code OAQ–107, 1200 Sixth Avenue, Seattle, WA 98101.	Alaska, Idaho, Oregon, Washington.

Table of Contents

I. Background
- A. Statutory and Regulatory Requirements
- B. Consequences of Findings of Failure To Submit

II. This Action

III. Statutory and Executive Order Reviews
- A. Notice and Comment Under the Administrative Procedure Act
- B. Effective Date Under the Administrative Procedure Act
- C. Executive Order 12866: Regulatory Planning and Review
- D. Paperwork Reduction Act
- E. Regulatory Flexibility Act (RFA)
- F. Unfunded Mandates Reform Act
- G. Executive Order 13132: Federalism
- H. Executive Order 13175: Consultation and Coordination With Indian Tribal Governments
- I. Executive Order 13045: Protection of Children From Environmental Health and Safety Risks
- J. Executive Order 13211: Actions That Significantly Affect Energy Supply, Distribution, or Use
- K. National Technology Transfer Advancement Act
- L. Executive Order 12898: Federal Actions To Address Environmental Justice in Minority Populations and Low-Income Populations
- M. Congressional Review Act
- N. Judicial Review

I. Background

In CAA section 169A, Congress declared as a national goal the prevention of any future, and the remedying of any existing, impairment of visibility in mandatory class I Federal areas (Class I areas)[1] which impairment results from manmade air pollution. EPA's visibility regulations, codified at 40 CFR 51.300–51.309, require states to develop regional haze SIPs with measures necessary to make reasonable progress towards remedying visibility impairment in Class I areas. The required SIP elements include: (1) For states with one or more Class I areas, the

[1] Areas designated as mandatory Class I Federal areas are those national parks exceeding 6,000 acres, wilderness areas and national memorial parks exceeding 5,000 acres, and all international parks which were in existence on August 7, 1977. Visibility has been identified as an important value in 156 of these areas. *See* 40 CFR part 81, subpart D.

setting of reasonable progress goals for each Class I area; (2) calculations of baseline and natural visibility conditions for each Class I area located in a state; (3) the development of long term strategies addressing visibility impairment; (4) a monitoring strategy that is representative of all Class I areas within a state and reporting requirements; (5) the BART requirements; and (6) a description of how the state addressed any comments provided by Federal Land Managers. 40 CFR 51.308. EPA's visibility regulations also provide certain states with the option to submit regional haze SIPs based on the recommendations of the Grand Canyon Visibility Transport Commission. Such SIPs are required to include certain emission reduction strategies, including a program to reduce emissions of sulfur dioxide from stationary sources. 40 CFR 51.309.

Some states have submitted regional haze SIPs as required under the CAA and EPA's implementing regulations, but at present a number of states have not yet submitted final SIPs to EPA to satisfy these requirements of the CAA. The EPA is by this action making a finding of failure to submit for those states.

A. Statutory and Regulatory Requirements

Sections 169A and 169B of the CAA set forth the goals of the regional haze program and mandate that states develop SIPs to ensure that reasonable progress is made towards meeting those goals, including the requirements for BART. The regional haze rule issued in 1999 specifies the requirements and deadlines for state and local SIPs designed to meet the visibility protection provisions of the CAA. *See* 64 FR 35714. EPA revised certain requirements of the regional haze rule on July 6, 2005 (70 FR 39104) including the deadline for submitting regional haze SIPs, pursuant to the Consolidated Appropriations Act for Fiscal Year 2004, Public Law 108–199, January 23, 2004 (codified at 42 U.S.C. 7407(d)(7), CAA section 107(d)(7)). This statutory deadline for SIP submittals was December 17, 2007.

B. Consequences of Findings of Failure To Submit

Under the CAA section 110(c), EPA is required to promulgate a Federal Implementation Plan (FIP) within two years of the effective date of a finding that a state has failed to submit a SIP. The FIP requirement is void if a state submits a regional haze SIP, and EPA approves that SIP within the two year period.

II. This Action

In this action, EPA is finding that 37 states, the District of Columbia, and the U.S. Virgin Islands have failed to make all or part of the required SIP submissions to address regional haze. This finding starts the two year clock for the promulgation by EPA of a FIP. EPA is not required to promulgate a FIP if the state makes the required SIP submittal and EPA takes final action to approve the submittal within two years of EPA's finding.

At approximately the same time as the signing of this notice, EPA Regional Administrators are sending letters informing each state identified below that they have failed to make the required regional haze SIP submissions. These letters, and any accompanying enclosures, have been included in the docket to this action. This action will be effective on January 15, 2009. The states listed in the tables below failed to submit all or part of the required SIP elements per section 169A of the CAA and associated implementing regulations at 40 CFR 51.308 and 40 CFR 51.309.

Arizona, New Mexico, and Wyoming have opted to develop SIPs based on the recommendations of the Grand Canyon Visibility Transport Commission under 40 CFR 51.309. All three States have failed to submit the plan elements required by 40 CFR 51.309(g), the reasonable progress requirements for areas other than the 16 Class I areas covered by the Grand Canyon Visibility Transport Commission Report. Arizona and New Mexico have also failed to submit the plan element required by 40 CFR 51.309(d)(4), the alternate stationary source program for control of sulfur dioxide (SO_2).

Colorado has failed to submit plan elements required by 40 CFR 51.308(d), specifically, reasonable progress goals and long-term strategy elements addressing reasonable progress. Colorado has also failed to submit a plan meeting the BART requirements of 40 CFR 51.308(e), specifically, BART determinations and requirements, for two sources located in the state, Colorado Springs Utilities' Martin Drake Power Plant in Colorado Springs, Colorado and Cemex, Inc. Lyons Portland Cement Plant in Lyons, Colorado.

Michigan has also failed to submit plan elements required by 40 CFR 51.308(d), specifically, reasonable progress goals and long-term strategy elements addressing reasonable progress. In addition, Michigan has failed to submit a plan meeting the BART requirements of 40 CFR 51.308(e). Specifically, for the following six sources located in the state, Michigan has failed to submit a plan with BART determinations and requirements: LaFarge Midwest, Inc. in Alpena, Michigan; St. Mary's Cement in Charlevoix, Michigan; Smurfit/Stone Container Corporation in Ontonagon, Michigan; Escanaba Paper Company in Escanaba, Michigan; and Cleveland Cliffs Corporation Tilden Mining Company and the Empire Iron Mining, both in Marquette, Michigan.

States and Territories Failing To Submit SIPs Addressing Any of the Required Regional Haze SIP Elements of 40 CFR 51.308

Alaska, California, Connecticut, District of Columbia, Florida, Georgia, Hawaii, Idaho, Illinois, Indiana, Kansas, Maine, Maryland, Massachusetts, Minnesota, Montana, Nebraska, Nevada, New Hampshire, New Jersey, New York, North Dakota, Ohio, Oklahoma, Oregon, Pennsylvania, Rhode Island, South Dakota, Texas, Vermont, U.S. Virgin Islands, Virginia, Washington, and Wisconsin.

States Failing To Submit SIPs Addressing Part of the Required Regional Haze SIP Elements

Arizona—40 CFR 51.309(g) and 40 CFR 51.309(d)(4).

Colorado—40 CFR 51.308(d) and 40 CFR 51.308(e) for two sources.

Michigan—40 CFR 51.308(d) and 40 CFR 51.308(e) for six sources.

New Mexico—40 CFR 51.309(g) and 40 CFR 51.309(d)(4).

Wyoming—40 CFR 51.309(g).

III. Statutory and Executive Order Reviews

A. Notice and Comment Under the Administrative Procedure Act

This is a final EPA action, but is not subject to notice-and-comment requirements of the Administrative Procedure Act (APA), 5 U.S.C. 553(b). EPA believes that because of the limited time provided to make findings of failure to submit regarding SIP submissions, Congress did not intend such findings to be subject to notice-and-comment rulemaking. However, to the extent such findings are subject to notice-and-comment rulemaking, EPA invokes the good cause exception pursuant to the APA, 5 U.S.C. 553(b)(3)(B). Notice and comment are unnecessary because no EPA judgment is involved in making a finding of failure to submit a SIP or required elements of SIP submissions pursuant to the CAA. Furthermore, providing notice and comment would be impracticable

because of the limited time provided under the statute for making such determinations. Finally, notice and comment would be contrary to the public interest because it would divert agency resources from the critical substantive review of SIPs that have already been submitted. *See* 58 FR 51270, 51272, n.17 (Oct. 1, 1993); 59 FR 39832, 39853 (Aug. 4, 1994).

B. Effective Date Under the Administrative Procedure Act

This action will be effective on January 15, 2009. Under the APA, 5 U.S.C. 553(d)(3), agency rulemaking may take effect before 30 days after the date of publication in the **Federal Register** if the agency has good cause to specify an earlier effective date. This action concerns SIP submissions that are already overdue; and EPA previously cautioned the affected states that the SIP submissions were overdue and that EPA was considering taking this action. In addition, this action simply starts a ''clock'' for EPA to promulgate a SIP within two years. There are no mandatory sanctions enacted against the states by this action, although the Agency may employ discretionary sanctions, and the clock may be ''turned off'' through the submission of complete SIPs by the states followed by approval of the SIPs by EPA. These reasons support an effective date prior to 30 days after the date of publication.

C. Executive Order 12866: Regulatory Planning and Review

This action is not a ''significant regulatory action'' under the terms of Executive Order (EO) 12866 (58 FR 51735, October 4, 1993) and is therefore not subject to review under the EO. However, the EPA submitted this action to the Office of Management and Budget (OMB) for review on December 11, 2008, and any changes made in response to OMB's recommendations have been documented in the docket for this action. The OMB released it on January 6, 2009.

D. Paperwork Reduction Act

This action does not impose an information collection burden under the provisions of the Paperwork Reduction Act, 44 U.S.C. 3501 *et seq.* Burden is defined at 5 CFR 1320(b). This rule relates to the requirement in the CAA for states to submit SIPs under section Part D of title I of the CAA.

E. Regulatory Flexibility Act (RFA)

This final rule is not subject to the Regulatory Flexibility Act (RFA), which generally requires an agency to prepare a regulatory flexibility analysis for any rule that will have a significant economic impact on a substantial number of small entities. The RFA applies only to rules subject to notice and comment rulemaking requirements under the Administrative Procedure Act (APA) or any other statute. This rule is not subject to notice and comment requirements under the APA or any other statute because, although the rule is subject to the APA, the Agency has invoked the ''good cause'' exemption under 5 U.S.C. 553(b), and therefore it is not subject to the notice and comment requirement.

F. Unfunded Mandates Reform Act

This action contains no Federal mandates under the provisions of Title II of the Unfunded Mandates Reform Act of 1998 (UMRA), 2 U.S.C. 1531–1538 for state, local, or tribal governments or the private sector. This action imposed no enforceable duty on any state, local, or tribal governments or the private sector. The action imposes no enforceable duty on any State, local or tribal governments or the private sector. Therefore, this action is not subject to the requirements of sections 202 and 205 of the UMRA.

This action is also not subject to the requirements of section 203 of UMRA because it contains no regulatory requirements that might significantly or uniquely affect small governments. This action does not impose any new obligations or enforceable duties on any small governments.

G. Executive Order 13132: Federalism

Executive Order 13132, entitled ''Federalism'' (64 FR 43255, August 10, 1999), requires EPA to develop an accountable process to ensure ''meaningful and timely input by state and local officials in the development of regulatory policies that have federalism implications.'' ''Policies that have federalism implications'' is defined in the Executive Order to include regulations that have ''substantial direct effects on the states, or the relationship between the national government and the states, or on the distribution of power and responsibilities among the various levels of government.''

This action does not have federalism implications. It will not have substantial direct effects on the states, on the relationship between the national government and the states, or on the distribution of power and responsibilities among the various levels of government, as specified in Executive Order 13132. The CAA establishes the scheme whereby states take the lead in developing plans to meet the National Ambient Air Quality Standards and the Federal government acts as a backstop where states fail to take the required actions. This rule will not modify the relationship of the states and EPA for purposes of developing programs to implement the regional haze program. Thus, Executive Order 13132 does not apply to this rule.

H. Executive Order 13175: Consultation and Coordination With Indian Tribal Governments

This action does not have tribal implications, as specified in Executive Order 13175 (65 FR 67249, November 9, 2000). This rule responds to the requirement in the CAA for states to submit SIPs to satisfy the requirements of the 1999 Regional Haze Regulations; Final Rule. The CAA requires each state to develop a SIP describing how the state will minimize the impacts of emissions emanating from within the state and contributing to visibility impairment in Class I areas. Tribes have elected not to submit Regional Haze SIPs and EPA will ensure air quality protection in Indian country consistent with the provisions of 40 CFR 49.11(a). Therefore, Executive Order 13175 does not apply to this action.

I. Executive Order 13045: Protection of Children From Environmental Health and Safety Risks

EPA interprets EO 13045 (62 FR 19885, April 23, 1997) as applying only to those regulatory actions that concern health or safety risks, such that the analysis required under section 5–501 of the EO has the potential to influence the regulation. This action is not subject to EO 13045 because this action is a procedural step toward reducing visibility impairment, which may also reduce pollution that may be harmful to children.

J. Executive Order 13211: Actions That Significantly Affect Energy Supply, Distribution, or Use

This action is not subject to Executive Order 13211 (66 FR 28355 (May 22, 2001)), because it is not a significant regulatory action under Executive Order 12866.

K. National Technology Transfer Advancement Act

Section 12(d) of the National Technology Transfer Advancement Act of 1995 (NTTAA), Public Law No. 104–113, section 12(d) (15 U.S.C. 272 note) directs EPA to use voluntary consensus standards (VCS) in its regulatory activities unless to do so would be inconsistent with applicable law or otherwise impracticable. VCS are

technical standards (e.g., materials specifications, test methods, sampling procedures, and business practices) that are developed or adopted by VCS bodies. The NTTAA directs EPA to provide Congress, through OMB, explanations when the Agency decides not to use available and applicable VCS.

This action does not involve technical standards. Therefore, EPA did not consider the use of any VCS.

L. Executive Order 12898: Federal Actions To Address Environmental Justice in Minority Populations and Low-Income Populations

Executive Order (EO) 12898 (59 FR 7629 (Feb. 16, 1994)) establishes Federal executive policy on environmental justice. Its main provision directs Federal agencies, to the greatest extent practicable and permitted by law, to make environmental justice part of their mission by identifying and addressing, as appropriate, disproportionately high and adverse human health or environmental effects of their programs, policies, and activities on minority populations and low-income populations in the United States.

EPA has determined that this final rule will not have disproportionately high and adverse human health or environmental effects on minority or low-income populations because it does not directly affect the level of protection provided to human health or the environment. This notice finds that certain states have not met the requirement to submit one or more SIPs and begins a clock requiring them to do so to meet this statutory obligation. If the state fails to submit the required SIPs or if they submit SIPs that EPA cannot approve, then EPA will be required to develop the plans in lieu of the states.

M. Congressional Review Act

The Congressional Review Act, 5 U.S.C. 801 *et seq.,* as added by the Small Business Regulatory Enforcement Fairness Act of 1996, generally provides that before a rule may take effect, the agency promulgating the rule must submit a rule report, which includes a copy of the rule, to each House of the Congress and to the Comptroller General of the United States. EPA will submit a rule report, a copy of this rule and other required information to the U.S. Senate, the U.S. House of Representatives, and the Comptroller General of the United States prior to publication of the rule in the **Federal Register**. A Major rule cannot take effect until 60 days after it is published in the **Federal Register**. This action is not a ''major rule'' as defined by 5 U.S.C. 804(2). This rule will be effective January 15, 2009.

N. Judicial Review

Under section 307(b)(1) of the CAA, petitions for judicial review of this action must be filed in the United States Court of Appeals for the District of Columbia Circuit within 60 days from the date this final action is published in the **Federal Register**. Filing a petition for reconsideration by the Administrator of this final rule does not affect the finality of this rule for the purposes of judicial review nor does it extend the time within which a petition for judicial review must be filed, and shall not postpone the effectiveness of such rule or action.

Thus, any petitions for review of this action making findings of failure to submit regional haze SIPs identified in section II above, must be filed in the Court of Appeals for the District of Columbia Circuit within 60 days from the date final action is published in the **Federal Register**.

List of Subjects in 40 CFR Part 52

Environmental protection, Administrative practice and procedure, Air pollution control, Intergovernmental relations, Reporting and recordkeeping requirements.

Dated: January 9, 2009.

Robert J. Meyers,

Principal Deputy Assistant Administrator.

[FR Doc. E9–779 Filed 1–14–09; 8:45 am]

BILLING CODE 6560–50–P

GENERAL SERVICES ADMINISTRATION

41 CFR Part 102–42

[FMR Amendment 2009–01; FMR Case 2008–102–2; Docket 2008–0001; Sequence 3]

RIN 3090–AI60

Federal Management Regulation; FMR Case 2008–102–2, Utilization, Donation, and Disposal of Foreign Gifts and Decorations

AGENCY: Office of Governmentwide Policy, General Services Administration (GSA).

ACTION: Final rule.

SUMMARY: The General Services Administration is amending the Federal Management Regulation (FMR) to revise its policy on appraisals of foreign gifts and decorations, and to encourage agencies to use various methods in obtaining appraisals, including reliable retail Web sites.

DATES: *Effective Date:* February 17, 2009.

FOR FURTHER INFORMATION CONTACT: Mr. Robert Holcombe, Director, Asset Management (MTA), at (202) 501–3828, or e-mail at *robert.holcombe@gsa.gov* for clarification of content. For information pertaining to status or publication schedules, contact the Regulatory Secretariat, Room 4041, GS Building, Washington, DC 20405, (202) 501–4755. Please cite FMR Amendment 2009–01, FMR Case 2008–102–2.

SUPPLEMENTARY INFORMATION:

A. Background

This final rule amends part 102–42 of the Federal Management Regulation (FMR) (41 CFR part 102–42) to bring this policy into alignment with 5 U.S.C. 7342 by placing the responsibility and guidelines for obtaining appraisals for foreign gifts and decorations onto the agencies (as required by 5 U.S.C. 7342(g)(2)(b)). Removing the policies from this part that specify the format and content of an appraisal will give agencies greater flexibility in obtaining appraisals. The flexibility is not intended to preclude the reporting of gifts, nor does it eliminate the need for a commercial appraisal when a retail value appraisal is not an option. This applies to all gifts, even when the recipient wishes to retain and/or purchase the item. This flexibility may include agency use of reliable retail Web sites (e.g., Department store Web sites, Commercial merchandise catalogs) to obtain the retail value in the United States of the items(s). This excludes the use of any auction or discount sale offerings that appear on the Internet or written publications (e.g., EBAY, Craig's List, or other non-commercial sites). Also, GSA now requires the employing agency to obtain an appraisal of a gift or decoration that the agency has retained for official use and no longer needs before accepting the agency's report of the item as excess personal property. Additionally, appraisals are required for gifts that are personalized (e.g., Books signed by the author, or gifts personally labeled).

This final rule also updates the address in section 102–42.95.

B. Executive Order 12866

This final rule is excepted from the definition of ''regulation'' or ''rule'' under Section 3(d)(3) of Executive Order 12866, Regulatory Planning and Review, dated September 30, 1993 and, therefore, was not subject to review under Section 6(b) of that executive order.

C. Regulatory Flexibility Act

This final rule is not required to be published in the **Federal Register** for comment. Therefore, the Regulatory Flexibility Act does not apply.

D. Paperwork Reduction Act

The Paperwork Reduction Act does not apply because the changes to the FMR do not impose information collection requirements that require the approval of the Office of Management and Budget under 44 U.S.C. 3501, *et seq.*

E. Small Business Regulatory Enforcement Fairness Act

This final rule is exempt from Congressional review under 5 U.S.C. 801 since it relates solely to agency management and personnel.

List of Subjects in 41 CFR Part 102–42

Government property management.

Dated: December 19, 2008.

James A. Williams,

Acting Administrator of General Services.

■ For the reasons set forth in the preamble, GSA amends 41 CFR part 102–42 as set forth below:

PART 102–42—UTILIZATION, DONATION, AND DISPOSAL OF FOREIGN GIFTS AND DONATIONS

■ 1. The authority citation for 41 CFR part 102–42 continues to read as follows:

Authority: 40 U.S.C. 121(c); 5 U.S.C. 7342.

§§ 102–42.40, 102–42.45, 102–42.50, and 102–42.55 [Removed]

■ 2. Remove §§ 102–42.40, 102–42.45, 102–42.50, and 102–42.55.

■ 3. Add new §§ 102–42.40, 102–42.45, 102–42.50, and 102–42.55 under the undesignated heading ''Appraisals'' to read as follows:

§ 102–42.40 When is an appraisal necessary?

An appraisal is necessary when—

(a) An employee indicates an interest in purchasing a gift or decoration. In this situation, the appraisal must be obtained before the gift or decoration is reported to GSA for screening (see 102–42.20); or

(b) GSA requires the employing agency to obtain an appraisal of a gift or decoration that the agency has retained for official use and no longer needs before accepting the agency's report of the item as excess personal property; or

(c) The policy of one's own agency requires it, pursuant to 5 U.S.C. 7342(g).

Note to § 102–42.40 paragraphs (a) and (b): Refer to § 102–42.50 for how appraisals under these two situations are handled.

§ 102–42.45 What is my agency's responsibility for establishing procedures for obtaining an appraisal?

The employing agency is responsible for establishing its own procedure for obtaining an appraisal that represents the value of the gift in the United States. This applies to all gifts, even when the recipient wishes to retain and/or purchase the gift. Appraisals are required for gifts that are personalized (e.g., Books signed by the author, Gifts personally labeled).

§ 102–42.50 What types of appraisals may my agency consider?

Your agency may allow—

(a) Written commercial appraisals conducted by an appraisal firm or trade organization; and

(b) Retail value appraisals where the value of the gift may be ascertained by reviewing current and reliable non-discounted retail catalogs, retail price lists, or retail Web site valuations.

§ 102–42.55 What does the employing agency do with the appraisal?

When an appraisal is necessary under § 102–42.40, the employing agency must include the appraisal with the Standard Form (SF) 120, Report of Excess Personal Property, and send it to GSA in accordance with the requirements of § 102–42.95. By attaching the appraisal, the employing agency is certifying that the value cited is the retail value/appraised value of the item in the United States in U.S. dollars on the date set forth on the appraisal.

§ 102–42.95 [Amended]

■ 4. Amend § 102–42.95 in the first paragraph by removing the words ''Property Management Division (FBP)'' and adding the words ''Utilization and Donation Program Division (QSCA)'' in its place.

[FR Doc. E9–562 Filed 1–14–09; 8:45 am]

BILLING CODE 6820–14–P

GENERAL SERVICES ADMINISTRATION

41 CFR Part 301–10

[FTR Amendment 2009–02; FTR Case 2009–302; Docket 2009–0001; Sequence 02]

RIN 3090–AI43

Federal Travel Regulation (FTR); Fly America Act; United States and European Union ''Open Skies'' Air Transport Agreement (US-EU Open Skies Agreement)

AGENCY: Office of Governmentwide Policy, General Services Administration (GSA).

ACTION: Final rule.

SUMMARY: GSA is amending the Federal Travel Regulation (FTR) provisions pertaining to the use of United States Flag air carriers under the provisions of the ''Fly America Act.'' This final rule incorporates language that informs readers where to find additional information regarding bilateral or multilateral air transportation agreements to which the United States Government and the government of a foreign country are parties, and which the Department of Transportation has determined meets the requirements of the Fly America Act. As these agreements qualify as exceptions to the use of U.S. flag air service pursuant to FTR section 41 CFR 301–10.135(b), this final rule advises of an Internet based source of information regarding the use of foreign air carriers under the terms of these bilateral or multilateral agreements.

DATES: This final rule is effective on January 15, 2009.

FOR FURTHER INFORMATION CONTACT: The Regulatory Secretariat (VPR), Room 4041, GS Building, Washington, DC 20405, (202) 208–7312, for information pertaining to status or publication schedules. For clarification of content, contact Mr. Rodney R. Miller, Office of Travel, Transportation and Asset Management (MT), General Services Administration at (202) 501–3822 or e-mail at *Rodney.miller@gsa.gov.* Please cite FTR Amendment 2009–02; FTR case 2009–302.

SUPPLEMENTARY INFORMATION:

A. Background

Passengers are required by 49 U.S.C. 40118, commonly referred to as the ''Fly America Act,'' to use United States flag air carrier service for all air travel funded by the United States Government. One exception to this requirement is transportation provided under a bilateral or multilateral air

transportation agreement to which the United States Government and the government of a foreign country are parties, and which the Department of Transportation has determined meets the requirements of the Fly America Act.

The United States Government has entered into several air transportation agreements which allow federally-funded passengers to use foreign air carriers under certain circumstances. For example, on April 30, 2007, the United States-European Union ''Open Skies'' Air Transport Agreement (US-EU Open Skies Agreement) was signed, providing EU member airlines the right to transport passengers and cargo on scheduled and charter flights funded by the United States Government under certain conditions. On March 4, 2008, GSA published a proposed rule in the **Federal Register** (73 FR 11576) with a request for comments concerning a proposal that would incorporate the US-EU Open Skies Agreement language pertaining to United States Government funded travelers into the FTR. Only one comment was received from the Association of Private Voluntary Organization Financial Managers (APVOFM). APVOFM strongly supported the proposed rule.

However, since the issuance of the proposed rule, the United States has also signed air transport agreements with Australia and Switzerland that include text relating to United States Government procured transportation. The provisions in both the Australia and Switzerland agreements became effective on October 1, 2008.

Accordingly, rather than amend the FTR to include language from these agreements, and thereafter amending the FTR each time future agreements are signed, GSA is issuing this final rule to provide for an Internet based source (*http://www.gsa.gov/openskies*) of information relating to air transportation agreements that impact United States Government funded transportation. This approach will allow GSA to quickly provide and update relevant information to Federal agencies as new agreements are signed or current agreements are amended without invoking the regulatory process. In the future, if GSA determines that further guidance is necessary, GSA will issue FTR Bulletins as appropriate.

B. Executive Order 12866

This final rule is not a significant regulatory action and, therefore, was not subject to review under Section 6(b) of Executive Order 12866, Regulatory Planning and Review, dated September 30, 1993. This final rule is not a major rule under 5 U.S.C. 804.

C. Regulatory Flexibility Act

This final rule is not required to be published in the **Federal Register** for notice and comment therefore, the Regulatory Flexibility Act, 5 U.S.C. 601, *et seq.*, does not apply.

D. Paperwork Reduction Act

The Paperwork Reduction Act does not apply because the changes to the FTR do not impose recordkeeping or information collection requirements, or the collection of information from offerors, contractors, or members of the public that require the approval of the Office of Management and Budget (OMB) under 44 U.S.C. 3501, *et seq.*

E. Small Business Regulatory Enforcement Fairness Act

This final rule is also exempt from congressional review prescribed under 5 U.S.C. 801 since it relates to agency management and personnel.

List of Subjects in 41 CFR Part 301–10

Government employees, Travel and transportation expenses.

Dated: December 12, 2008.

James A. Williams,

Acting Administrator of General Services.

■ For the reasons set forth in the preamble, GSA amends 41 CFR part 301–10 as follows:

PART 301–10—TRANSPORTATION ALLOWABLE

■ 1. The authority citation for 41 CFR part 301–10 continues to read as follows:

Authority: 5 U.S.C. 5707; 40 U.S.C. 121(c); 49 U.S.C. 40118; Office of Management and Budget Circular No. A–126, ''Improving the Management and Use of Government Aircraft'' Revised April 28, 2006.

■ 2. Amend § 301–10.135 by revising paragraph (b) to read as follows:

§ 301–10.135 When must I travel using U.S. Flag air carrier service?

* * * * *

(b) The transportation is provided under a bilateral or multilateral air transportation agreement to which the United States Government and the government of a foreign country are parties, and which the Department of Transportation has determined meets the requirements of the Fly America Act.

(1) Information on bilateral or multilateral air transportation agreements impacting United States Government procured transportation can be accessed at *http://www.gsa.gov/openskies*; and

(2) If determined appropriate, GSA may periodically issue FTR Bulletins providing further guidance on bilateral or multilateral air transportation agreements impacting United States Government procured transportation. These bulletins may be accessed at *http://www.gsa.gov/bulletins*.

* * * * *

[FR Doc. E9–560 Filed 1–14–09; 8:45 am]

BILLING CODE 6820–14–P

GENERAL SERVICES ADMINISTRATION

41 CFR Part 301–10

[FTR Amendment 2009–01; FTR Case 2009–301; Docket 2009–0001]

RIN 3090–AI84

Federal Travel Regulation; Privately Owned Vehicle Mileage Reimbursement

AGENCY: Office of Governmentwide Policy, General Services Administration (GSA).

ACTION: Final rule.

SUMMARY: GSA is amending the Federal Travel Regulation (FTR) to decrease the mileage reimbursement rates for privately owned automobiles (POA), motorcycles, and airplanes when used for official travel. The new rates reflect the current vehicle operating costs as determined by investigations conducted by GSA. The governing regulation sets the mileage reimbursement allowance for a POA at $0.55, motorcycles at $0.52, and airplanes at $1.24, when used for official purposes.

DATES: *Effective Date:* This final rule is effective January 15, 2009.

Applicability Date: This final rule is applicable for official travel performed on and after January 1, 2009.

FOR FURTHER INFORMATION CONTACT: The Regulatory Secretariat (VPR), Room 4041, GSA Building, Washington, DC 20405, (202) 501–4755, for information pertaining to status or publication schedules. For clarification of content, contact Ms. Marcerto Barr, Program Analyst, Office of Governmentwide Policy, Travel Management Policy, at (202) 208–7654. Please cite FTR Amendment 2009–01; FTR case 2009–301.

SUPPLEMENTARY INFORMATION:

A. Background

Pursuant to 5 U.S.C. 5707(b), the Administrator of General Services has

the responsibility to establish POV mileage reimbursement rates that Federal employees are entitled to when they use a POA, motorcycle or airplane for official business. To set the rates, GSA is required to periodically investigate the cost to Government employees of operating a POV while on official travel, and consult with the Secretaries of Defense and Transportation, and representatives of Government employee organizations. GSA conducted investigative reports on the mileage rates for motorcycles and airplanes. The Internal Revenue Service (IRS) conducted an investigative report on the mileage rates for a POA to compute the deductible cost of operating passenger vehicles for business purposes. GSA analyzed the data in the IRS report and adopted the findings. After consultation with the above-referenced Federal agencies and Government employee organizations, the Administrator of General Services has determined that the per mile operating costs for the official use of a POA (including trucks) is $0.55, $0.52 for motorcycles, and $1.24 for airplanes. As provided in 5 U.S.C. 5704(a)(1), the POA mileage reimbursement rate cannot exceed the single standard mileage rate established by the IRS. The IRS announced a new single standard mileage rate for automobiles of $0.55 per mile effective January 1, 2009. The results of the investigative reports have been reported to Congress.

B. Executive Order 12866

This is not a significant regulatory action, and therefore, was not subject to review under Section 6(b) of Executive Order 12866, Regulatory Planning and Review, dated September 30, 1993. This final rule is not a major rule under 5 U.S.C. 804.

C. Regulatory Flexibility Act

This final rule is not required to be published in the **Federal Register** for notice and comment, and therefore, the Regulatory Flexibility Act, 5 U.S.C. 601, *et seq.*, does not apply.

D. Paperwork Reduction Act

The Paperwork Reduction Act does not apply because the changes to the FTR do not impose recordkeeping or information collection requirements, or the collection of information from offerors, contractors, or members of the public that require the approval of the Office of Management and Budget (OMB) under 44 U.S.C. 3501, *et seq.*

E. Small Business Regulatory Enforcement Fairness Act

This final rule is also exempt from congressional review prescribed under 5 U.S.C. 801 since it relates solely to agency management and personnel.

List of Subjects in 41 CFR Part 301–10

Government employees, Travel and transportation expenses.

Dated: January 2, 2009.

James A. Williams,

Acting Administrator of General Services.

■ For the reasons set forth in the preamble, under 5 U.S.C. 5701–5709, GSA amends 41 CFR part 301–10 as set forth below:

PART 301–10—TRANSPORTATION EXPENSES

■ 1. The authority citation for 41 CFR part 301–10 continues to read as follows:

Authority: 5 U.S.C. 5707, 40 U.S.C. 121 (c); 49 U.S.C. 40118, Office of Management and Budget Circular No. A–126, ''Improving the Management and Use of Government Aircraft.'' Revised April 28, 2006.

■ 2. Amend the table in § 301–10.303 by revising the second, third, and fourth entries to read as follows:

§ 301–10.303 What am I reimbursed when use of a POV is determined by my agency to be advantageous to the Government?

For use of a . . .	Your reimbursement is . . .
* * * * *	
Privately owned airplane	[1] $1.24
Privately owned automobile	[1] $0.55
Privately owned motorcycle	[1] $0.52

[1] Per mile.

Note: This attachment will not appear in the code of Federal Regulations.

Attachment to Preamble

GENERAL SERVICES ADMINISTRATION

REPORTING TO CONGRESS—THE COSTS OF OPERATING PRIVATELY OWNED VEHICLES

Paragraph (b) of Section 5707 of Title 5, United States Code, requires the Administrator of General Services to periodically investigate the cost to Government employees of operating privately owned vehicles (airplanes, automobiles, and motorcycles) while on official business, to report the results of the investigations to Congress, and to publish the report in the **Federal Register**. This report on privately owned vehicle reimbursement rates is being published in the **Federal Register**.

Dated: January 2, 2009.

James A. Williams,

Acting Administrator of General Services.

Reporting to Congress—The Costs of Operating Privately Owned Vehicles

5 U.S.C. 5707(b)(1)(A) requires that the Administrator of General Services, in consultation with the Secretary of Defense, the Secretary of Transportation, and representatives of Government employee organizations, conduct periodic investigations of the cost of travel and operation of privately owned vehicles (airplanes, automobiles, and motorcycles) to Government employees while on official business, and report the results to Congress at least once a year. 5 U.S.C. 5707(a)(1) requires that the Administrator of General Services issue regulations, including the prescription of mileage reimbursement rates. Pursuant to 5 U.S.C. 5707(b), the Administrator shall also determine the average, actual cost per mile for the use of each type of privately owned vehicle based on the results of cost investigations. Such figures must be reported to the Congress within 5 working days after the cost determination has been made in accordance with 5 U.S.C. 5707(b)(2)(C).

GSA conducted investigative reports on the mileage rates for motorcycles and airplanes. The Internal Revenue Service (IRS) conducted an investigative report on the mileage rates for a POA to compute the deductible cost of operating passenger vehicles for business purposes. GSA analyzed the data in the IRS report and adopted the findings. As provided in 5 U.S.C. 5704(a)(1), the POA mileage reimbursement rate cannot exceed the single standard mileage rate established by the IRS. The IRS announced the new single standard mileage rate of $0.55 per mile for automobiles, effective January 1, 2009. Based on the investigative reports, and in consultation with the above-specified parties, I have determined that the per mile operating costs for the official use of a POV is as follows: $0.55 for POAs (including trucks), $0.52 for motorcycles, and $1.24 for airplanes. This report to Congress on the cost of operating POVs will be published in the **Federal Register**.

[FR Doc. E9–563 Filed 1–14–09; 8:45 am]

BILLING CODE 6820–14–P

DEPARTMENT OF HEALTH AND HUMAN SERVICES

45 CFR Part 46

RIN 0940–AA06

Office of Public Health and Science; Institutional Review Boards: Registration Requirements

AGENCY: Office of Public Health and Science, HHS.

ACTION: Final rule.

SUMMARY: The Office for Human Research Protections (OHRP), Office of Public Health and Science, Department of Health and Human Services (HHS), is adding a new subpart E to the HHS protection of human subjects regulations, which requires institutional review boards (IRB) that review human subjects research conducted or supported by HHS and that are designated under an assurance of compliance approved for federalwide use by OHRP to register with HHS. The registration information includes contact information, approximate numbers of all active protocols and active protocols involving research conducted or supported by HHS, and staffing for the IRB. The registration requirements will make it easier for OHRP to convey information to IRBs and will support the current IRB registration system operated by OHRP. Under this final rule, the IRB registration system is compatible with the IRB registration requirements of the Food and Drug Administration (FDA), which are simultaneously published as a final rule in this issue of the **Federal Register**, allowing the operation of a single HHS IRB registration system.

DATES: This rule is effective July 14, 2009. This protracted effective date is necessary to allow refinement of the electronic registration system so that it corresponds to this final rule and the FDA's final rule, and obtain Office of Management and Budget (OMB) review and approval for the information collection requirements of this rule.

Initial registration with all required information must be submitted within 60 days of the effective date of the rule, by September 14, 2009. For any IRB currently registered with OHRP, the institution or organization operating the IRB must submit all information required under this rule by the three-year expiration date previously assigned by OHRP or within 90 days of any changes regarding the contact person who provided the IRB registration information or the IRB chairperson.

FOR FURTHER INFORMATION CONTACT: Irene Stith-Coleman, PhD, Office for Human Research Protections, 1101 Wootton Parkway, Suite 200, Rockville, MD 20852, telephone (240) 453–6900, e-mail *irene.stith-coleman@hhs.gov*.

SUPPLEMENTARY INFORMATION:

I. Background

HHS, through OHRP, regulates research involving human subjects conducted or supported by HHS in regulations codified at 45 CFR part 46. The HHS protection of human subjects regulations address the appropriate role of IRBs in the human subject research enterprise. IRBs are boards, committees, or groups formally designated by an institution to conduct initial and continuing review of research involving human subjects. An IRB's primary purpose during such reviews is to ensure the protection of the rights and welfare of human research subjects.

OHRP has been operating a system of IRB registration since December 2000, which was initiated in response to a 1998 HHS Office of Inspector General (OIG) recommendation that all IRBs register with the Federal government on a regular basis as part of an effort to develop a more streamlined, coordinated, and probing means of assessing IRB performance and to enhance the Federal government's ability to identify and respond to emerging problems. After reviewing OIG's recommendation, OHRP concluded that IRB registration would serve several important goals. IRB registration would enable OHRP to: (1) Identify more precisely those IRBs reviewing research conducted or supported by HHS under an assurance of compliance approved for federalwide use by OHRP (i.e., a Federalwide Assurance [FWA]); (2) keep an accurate, up-to-date list of IRBs; (3) send educational information and other information to IRBs, increasing the efficiency of OHRP educational and outreach efforts; and (4) identify IRBs that are subject to HHS regulations for monitoring and oversight purposes.

The OHRP IRB registration system was designed to collect information required under the HHS human subjects protection regulations at 45 CFR 46.103. That regulatory provision requires institutions that are engaged in human subjects research conducted or supported by HHS to file with OHRP an assurance of compliance with the HHS human subjects protection regulations. Under 45 CFR 46.103(a), other Federal Department or Agency heads shall accept an assurance on file with HHS that is approved for federalwide use by OHRP and that is appropriate for the research in question. The only type of assurance currently accepted by OHRP is an FWA. Among other things, assurances of compliance must include information on the institution's designated IRB(s), and a list of IRB members identified by name, earned degrees, representative capacity, experience, and any employment or other relationship with the institution (45 CFR 46.103(b)(2),(3)). The IRB registration system was designed to collect additional information, to be provided voluntarily by institutions or IRBs, regarding the accreditation status of the institution or IRB organization, total numbers of active research protocols reviewed by the IRB (including protocols supported by other Federal departments or agencies) and the nature of those protocols, and IRB staffing.

On July 6, 2004, OHRP published in the **Federal Register** a Notice of Proposed Rulemaking (NPRM) seeking public comment on changes to the current IRB registration system administered by OHRP (69 FR 40584). OHRP proposed to amend the HHS human subjects protection regulations at 45 CFR part 46 by adding subpart F, entitled ''Registration of Institutional Review Boards.'' In the new subpart F, OHRP proposed to require that any IRB designated under an assurance of compliance approved for federalwide use by OHRP that reviews human subjects research conducted or supported by HHS submit most of the information, including the information that previously was provided on a voluntary basis, listed on the IRB registration form that is currently used by OHRP. By requiring IRBs to provide such information, OHRP IRB registration requirements would become substantially consistent with requirements for IRB registration that were simultaneously proposed by FDA (69 FR 40556). OHRP and FDA proposed to use a single registration system, accessible on the OHRP Web site, in which all IRBs that review research conducted or supported by HHS or clinical investigations regulated by FDA can be registered.

The proposed subpart F specifically addressed who must register an IRB, what information an IRB must provide when registering, when an IRB must register, where an IRB can register, and how an IRB can revise its registration information.

In preparing the final rule, HHS has changed the designation of proposed subpart F to subpart E and changed the numbering of the provisions from §§ 46.601–605 to §§ 46.501–505.

II. Comments

Discussion of Individual Comments

During the public comment period that ended October 4, 2004, the Department received 13 public comments on the proposed rule from interested parties. In general, the comments were supportive of IRB registration, although some commenters disagreed with specific aspects of the proposed rule. The comments are summarized as follows:

1. What information must an IRB provide when registering? (Proposed § 46.602)

Proposed § 46.602 described the information to be submitted as part of the registration process. Specific comments were received on the following proposed data elements required for registration.

IRB Roster

OHRP proposed to collect an IRB roster that includes the names, earned degrees, gender, area of specialty and affiliation of each voting member (including the IRB chairperson) and alternate IRB members.

One commenter stated that the value or utility of collecting information about the IRB roster is not clear and that the collection may be quite burdensome. OHRP notes that the collection of IRB roster information by HHS for each IRB that is designated on an OHRP-approved FWA already is required by 45 CFR 46.103(b)(3), and thus has decided to delete this requirement from the final rule as unnecessarily duplicative. However, the IRB registration form will continue to include IRB roster information as part of the IRB registration process since this information is required by 45 CFR 46.103(b)(3).

Approximate Number of Total Active Protocols

OHRP proposed to require submission of the approximate number of total active protocols undergoing initial and continuing review and the approximate number of active protocols supported by HHS. The proposal would have required identification of the range of the number of protocols reviewed in the preceding calendar year. A ''small'' number of protocols would be 1 to 25 protocols, ''medium'' 26 to 499 protocols, and ''large'' 500 or more protocols. OHRP explained that this information will enable it to determine how active an IRB is and to assign its quality improvement, educational, and compliance oversight resources based on an IRB's activity level.

One commenter asserted that this collection poses an unnecessary reporting burden by going beyond the information needed to meet the registration requirements, and strongly recommended that OHRP limit its data collection to elements that support regulatory requirements. This commenter argued that the proposed data collection will not provide OHRP with information that assists in the constructive assessment of an institution's IRB activity, and, as a consequence, has limited value. The commenter noted that, for example, 24 cancer studies will most likely generate a significantly greater volume of work for an IRB than 500 social or statistical data analyses—many of the latter of which will be reviewed under expedited review procedures.

Two other commenters expressed concern about this information collection. One stated that, given the variety of protocols that are being performed at any large research university and the different oversight workloads that varying protocols require, such a crude measure might lead to erroneous interpretation of the registration data. This commenter asserted that, at a minimum, such data should be accompanied by a disclaimer to avoid misunderstanding, but that OHRP may want to reconsider the necessity and validity of such information. The second commenter said that it is unclear how useful or accurate such data would be in light of the following factors: The varying complexity of IRB review and protocol-driven research activity (e.g., social and behavioral, biomedical, phase 1, 2, or 3 studies, gene therapy); the level of IRB review (i.e., review at a convened meeting or expedited review process) required for different types of research protocols (e.g., chart reviews, interventions, survey research, continuation review, etc.); and the frequent and daily changes in the number of protocols reviewed by an IRB. The commenter recommended that this information collection be an optional question.

Another commenter questioned whether research volume per se is an accurate measure of the workload of an IRB. Acknowledging and appreciating that OHRP did not propose that institutions be required to supply specific numbers of active protocols undergoing initial and continuing review each year, this commenter had no objection to the proposal of numerical ranges that can be selected by registrants to describe their activity. However, the commenter urged that the information be interpreted carefully and cautiously in light of the importance of OHRP's proposed uses of the information collected.

Another commenter supported this information collection but encouraged OHRP to consider redefining the ranges as small 1–99, medium 100–499, large 500–1,999, and very large 2,000 or more. The commenter noted that there are a substantial number of organizations that oversee thousands of protocols and thus operate quite differently from those that oversee 500 protocols; further, there appears to be a small number of organizations with fewer than 25 protocols, and organizations with very few protocols often rely upon an IRB operated by another organization rather than form their own IRB.

After careful consideration of all comments, OHRP will retain this information requirement in the final rule for the reasons stated in the NPRM: This information will provide insight into an IRB's activity level and allow OHRP to more effectively assign its quality improvement, educational, and compliance oversight resources. However, given that the proposed protocol ranges were artificial, we have revised the rule to eliminate the ''small,'' ''medium'', and ''large'' ranges. Instead, the final rule requires submission of an approximate number of all active protocols and the approximate number of active protocols conducted or supported by HHS. For the purpose of the final rule, an ''active protocol'' is any protocol or study for which an IRB conducted an initial review or a continuing review at a convened meeting or under an expedited review procedure during the preceding twelve months. OHRP will utilize this data cautiously and does not intend to use this data to make presumptive or sweeping determinations regarding an institution's human subject protection program.

Approximate Number of Full-Time Equivalent Positions

OHRP proposed to require submission of the approximate number of full-time equivalent positions (FTEs) devoted to the IRB's administrative activities. HHS regulations for the protection of human subjects at 45 CFR 46.103(b)(2) require that assurances of compliance applicable to HHS-conducted or -supported research include the designation of one or more IRBs for which, among other things, provisions are made for meeting space and sufficient staff to support the IRB's review and recordkeeping duties. In OHRP's experience, the number of FTEs compared to the volume of research is

one useful parameter for assessing whether an IRB has sufficient staff, as required by HHS regulations for the protection of human subjects at 45 CFR 46.103(b)(2).

Two commenters objected to this proposed information requirement. One recommended that these data not be included in the registry, stating that there is no standard measure for IRB staffing and no formula for allocation of personnel to administer an IRB; the nature of the protocols reviewed—biomedical or social and behavioral sciences—has a direct impact on staffing decisions; and information on the number of full-time IRB staff positions is of limited value in assessing the institution's commitment to human subject protection. The commenter asserted that this collection poses an unnecessary reporting burden by going beyond the information needed to meet the registration requirements, and strongly recommended that OHRP limit its data collection to elements that support regulatory requirements. The commenter also stated that the request for information about the number of staff devoted to the IRB does not strengthen the value of the protocol data; and that as with the approximation of active protocols, the types of protocols reviewed and managed by the IRB staff—biomedical or social and behavioral sciences—have a direct effect on the allocation of resources. The second commenter urged that this information be interpreted carefully and cautiously in OHRP's determinations of whether or not an institution has made provisions for meeting space and sufficient staff to support the IRB's review and record keeping duties.

OHRP finds that collecting information on the number of FTEs allocated to IRB administrative activities poses little if any burden on institutions and would be helpful in OHRP's assessment of whether an IRB has sufficient staff, and therefore, OHRP has retained this requirement in the final rule. OHRP will utilize this data cautiously and intends neither to use this information as the only parameter for measuring regulatory compliance with 45 CFR 46.103(b)(2), nor to use this data to make presumptive or sweeping determinations regarding an institution's human subject protection program. OHRP has no intention of using this data to develop a formula for assessing the adequacy of IRB resources.

Accreditation Status

OHRP proposed to require submission of information regarding whether the institution or organization registering an IRB currently is accredited by a human subjects protection program accrediting organization, and if so, the date of its last accreditation and the name of the accrediting organization. OHRP stated that because accreditation is a developing concept, information on accreditation will help OHRP to evaluate the extent and value of IRB accreditation, and specifically solicited public comment related to the perceived value of collecting information on the accreditation status of IRBs.

Four commenters endorsed the collection of accreditation status information. Of these, two urged OHRP to use the accreditation of the institution, organization, or human research protection program as the unit of measure rather than IRB accreditation.

Four commenters objected to the proposed collection of accreditation status information. Two of these commenters indicated that the accreditation process is relatively new and noted that the names of accredited institutions and organizations are publicly accessible at sites that will present more up-to-date information than would be available in the HHS IRB registration database. One of the objecting commenters stated that the information may not be accurate, and another noted that accreditation has shown no proven benefit and no one set of accreditation standards has been developed or accepted.

In response to these comments, OHRP has decided to eliminate the requirement for reporting accreditation status from the final rule. Because similar information is publicly accessible, OHRP has determined that collection of this information through the IRB registration process is unnecessary.

Other Data Elements

One commenter noted that the data required for registration fails to include a parameter that would monitor whether IRB members have experience that would contribute to an adequate review of research studies involving children. The commenter requested that proposed § 46.602(e) be modified to require an indication of whether each IRB member has child health care and research expertise, and that proposed § 46.602(f) be expanded to include an estimate of the number of protocols an IRB reviewed that involved children. OHRP finds that the collection of such information is not necessary to further its goals of ensuring consistency with the requirements of 45 CFR 46.103(b)(3) that pertain to IRB composition.

One commenter suggested that the information collected from IRBs include a sense of the scope of vulnerable populations included in the research protocols, such as children, pregnant women, the elderly, and prisoners. OHRP finds that the collection of such information is not necessary to further the stated goals of the IRB registration system.

2. Where can an IRB register? (Proposed § 46.604)

Proposed § 46.604 directed IRBs to register at an HHS Internet site or, if the institution or IRB organization lacks the ability to register electronically, to send registration information to OHRP's mailing address.

One commenter expressed pleasure that IRB registration may be performed online, greatly easing the compliance burden associated with such a requirement. OHRP agrees that online registration simplifies the IRB registration process and expects that nearly all institutions or IRB organizations have the capability to register electronically. The final rule has been modified to now require that each IRB must be registered electronically unless an institution or organization lacks the ability to register its IRB(s) electronically. If an institution or organization lacks the ability to register an IRB electronically, it must send its IRB registration information in writing to OHRP.

3. How does an IRB revise its registration information? (Proposed § 46.605)

Proposed § 46.605 required that changes in the IRB contact, chairperson, or roster information be updated in the registry within 90 days. Whenever the electronic system is used to update or revise such information, the system instructs that all data on the IRB registration form be verified.

Proposed § 46.605 also considered an assured institution's or IRB organization's decision to disband a registered IRB, or to stop reviewing research conducted or supported by HHS, to be a change that must be reported to HHS within 30 days.

One commenter expressed concern about the requirement for reporting the closure of an IRB within 30 days, noting that the closure process may take longer than 30 days and that imposition of this requirement would put an undue burden on IRBs and the supporting institutions. In response to this comment, OHRP has added clarifying language to the final rule (now § 46.505) to indicate that an institution's or organization's decision to disband a registered IRB designated under an FWA must be reported to OHRP within

30 days of permanent cessation of the IRB's review of HHS-conducted or supported research.

OHRP notes that § 46.505 of the final rule has been modified from the proposed § 46.605 to delete the requirement that IRB roster changes must be submitted within 90 days, because 45 CFR 46.103(b)(3) already requires that changes in IRB roster information be reported to OHRP.

4. General Comments

Nine commenters specifically commented in support of the concept of IRB registration.

One commenter requested that FDA and OHRP maintain one common registration site that will automatically include currently registered IRBs and allow them to retain their currently assigned numbers. OHRP notes that such a common registration site has been created.

One commenter urged that the information required from registered IRBs be the same for both FDA and OHRP. OHRP finds that, because of the differing statutory and regulatory authorities of FDA and OHRP to collect IRB registration information, the information required from registered IRBs is not the same for both agencies. However, OHRP notes that § 46.502 of the final rule has been modified from the proposed § 46.602 to harmonize further OHRP's final rule with FDA's. These changes include the following:

- Section 46.502(a) (which was § 46.602(a) in the NPRM) was modified to remove the requirement to submit the earned degree and the title of the senior or head official of the institution or organization operating the IRB who is responsible for overseeing the activities performed by the IRB. This section also was modified to require submission of the street address (if different from the mailing address) for the institution or organization operating the IRB.
- Section 46.502(b) (which was § 46.602(b) in the NPRM) was modified to remove the requirement to submit the title of the contact person providing the registration information. This section also was modified to require submission of the mailing address of this contact person.
- Section 46.502(c) (which was § 46.602(c) in the NPRM) was modified to require submission of the IRB's phone number, facsimile number, mailing address, street address (if different from the mailing address), and electronic mail address.
- Section 46.502(d) (which was § 46.602(d) in the NPRM) was modified to remove the requirement to submit the gender, earned degree, title, mailing address, and facsimile number of the IRB chairperson.

As stated in the preamble to the proposed rule, the Internet registration site will request more information from IRBs reviewing research conducted or supported by HHS than from IRBs reviewing clinical investigations regulated by FDA that are not conducted or supported by HHS. In those instances where the registration site would seek more information than FDA would require, the Internet site would clarify that IRBs regulated solely by FDA are not required to provide the additional information. Likewise, in those instances where the registration site would seek additional information from IRBs regulated by FDA but not regulated by HHS, the Internet site would clarify that IRBs regulated by HHS are not required to provide such information.

One commenter suggested that the rule make clear what of the information submitted is available through a Freedom of Information Act (FOIA) request. OHRP notes that although the IRB registration system information is subject to FOIA, disclosure determinations will be made in accordance with applicable exemptions.

One commenter questioned whether, if an IRB was originally registered with the U.S. Department of Education (ED) and reviews both ED and HHS research projects, the proposed registration update will meet the ED requirements. ED has informed OHRP that ED will rely upon the HHS IRB registration system and indicated that ED would ensure that the IRB will be registered with OHRP.

One commenter asserted that if HHS requires IRBs to register but does not require industry and investigators to use a registered IRB, then only the IRBs are at risk of being penalized for a failure to register. The commenter suggested that HHS should impose a financial penalty on the investigators and sponsors who do not use a registered IRB. OHRP declines to impose monetary penalties on investigators and sponsors who do not use a registered IRB for review of research. OHRP does not have the legal authority to impose fines for failure to maintain IRB registration information. Furthermore, OHRP notes that an IRB cannot be designated under an assurance of compliance approved for federalwide use by OHRP if it fails to register. OHRP believes that the registration requirement is both simple and straightforward, so it does not expect that institutions or organizations operating IRBs designated under FWAs will refuse or fail to register or revise their registration information.

One commenter asked whether IRBs will receive confirmation that the IRB is registered. Confirmation of registration will be provided to the registering entity under the IRB registration system.

One commenter expressed concern that the proposed rule change will hinder small- to medium-sized organizations which wish to conduct HHS-supported research because such smaller organizations may lack resources to support standing IRBs. OHRP finds that this regulatory change does not mandate that every research organization that receives HHS support must have its own IRB. OHRP anticipates that an institution without an IRB that wishes to conduct HHS-supported human subjects research may designate under its FWA an independent IRB or another institution's IRB for review of research, and that this IRB will be registered in accordance with the regulatory requirements.

Summary of Key Changes in the Final Rule

After considering the comments on the proposed rule, OHRP is adopting the rule largely as it was proposed. The following key changes have been made in the final rule:

1. The designation of proposed subpart F has changed to subpart E and the numbering of the provisions has changed from §§ 46.601–605 to 46.501–505.

2. The proposed requirement to collect an IRB roster that includes the name, gender, degree, scientific or nonscientific specialty, and affiliation of each voting and alternate IRB member, including the chairperson (which was § 46.602(e) in the NPRM) has been deleted from the final rule. However, the IRB registration form will continue to include IRB roster information as part of the IRB registration process since this information is required by 45 CFR 46.103(b)(3).

3. Section 46.502(a) of the final rule (which was § 46.602(a) in the NPRM) was modified to remove the requirement to submit the earned degree and title of the senior or head official of the organization or institution operating the IRB who is responsible for overseeing activities performed by the IRB. This section also was modified to require submission of the street address (if different from the mailing address) for the institution or organization operating the IRB.

4. Section 46.502(b) of the final rule (which was § 46.602(b) in the NPRM) was modified to remove the requirement to submit the title of the contact person providing the registration information. This section also was modified to require submission of the mailing address of this contact person.

5. Section 46.502(c) of the final rule (which was § 46.602(c) in the NPRM) was modified to require submission of the IRB's phone number, facsimile number, mailing address, street address (if different from the mailing address), and electronic mail address.

6. Section 46.502(d) of the final rule (which was § 46.602(d) in the NPRM) was modified to remove the requirement to submit the gender, earned degree, title, mailing address and facsimile number of the IRB chairperson.

7. Section 46.502(e) of the final rule (which was § 46.602(f) in the NPRM) was modified to require submission of the approximate number of all active protocols and active protocols conducted or supported by HHS, rather than the number ranges (small, medium, or large) for total active protocols and active protocols supported by HHS, as proposed in the NPRM.

8. The proposed requirement to submit information regarding whether the institution or IRB organization registering an IRB is accredited (which was in § 46.602(h) of the NPRM) has been deleted from the final rule.

9. Section 46.503 of the final rule (which was § 46.603 in the NPRM) was modified to clarify that IRB registration becomes effective when reviewed and accepted by OHRP, rather than when HHS posts registration information on its website.

10. Section 46.504 of the final rule (which was § 46.604 in the NPRM) was modified to require electronic submission of registration information unless an institution or organization lacks the ability to do so.

11. Section 46.505 of the final rule (which was § 46.605 in the NPRM) was modified to remove the requirement that information regarding IRB roster changes must be submitted within 90 days because 45 CFR 46.103(b)(3) already requires that changes in IRB roster information be reported to OHRP.

Other minor changes have been made in the final rule for purposes of clarity and accuracy.

III. What Happens if an IRB Does Not Register or Fails To Update its Registration Information?

An IRB cannot be designated under an FWA if it fails to register. If an FWA submitted to OHRP for approval designates an IRB that has not been registered, OHRP will not approve the FWA with the designation of that IRB.

If an IRB designated under an FWA fails to appropriately update its registration information in accordance with § 46.505 of the final rule, OHRP could restrict or revoke its approval of the FWA. For example, if an IRB fails to appropriately update its registration information in accordance with § 46.505 of the final rule, OHRP could take appropriate action under the institution's FWA and OHRP's compliance oversight policies and procedures. OHRP believes that the registration requirement in the final rule is both simple and straightforward, so it does not expect that institutions or organizations operating IRBs designated under FWAs will refuse or fail to register or update their registration information.

IV. Who Has Access to the IRB Registration Information Submitted to HHS?

OHRP has posted and will continue to post on its Web site the following information collected under the IRB registration process:

1. The name, location, and OHRP-assigned number (called an IORG number) of each institution or organization that has registered an IRB. The IORG number is a unique number assigned by OHRP to an institution or organization the first time that it registers an IRB. This number is to be provided to OHRP whenever an institution or organization subsequently updates or renews the existing registration of any of its IRBs or registers a new IRB. Provision of the IORG number allows OHRP to efficiently track and organize all IRB registration information submitted by the same institution or organization.

2. The name, location, registration expiration date, and OHRP-assigned registration number of each registered IRB. The first time an IRB is registered, OHRP assigns it a separate unique IRB registration number. This number is to be provided to OHRP whenever an institution or organization subsequently updates or renews an IRB registration. Provision of the IRB registration number allows OHRP to efficiently track and organize all IRB registration information submitted by an institution or organization for the same IRB. Furthermore, an institution submitting an FWA includes the IRB registration number for each IRB designated under its FWA, thereby eliminating the need for multiple submissions of the same registration information to OHRP.

Although all other information collected by the IRB registration is subject to FOIA, disclosure determinations will be made in accordance with applicable exemptions.

Beyond such access to the information, OHRP will maintain the confidentiality of the information submitted with the IRB registration to the extent allowed by law.

All of the IRB registration information that is submitted to OHRP will be transferred to a separate server which will not be publicly accessible. In this manner, a high level of security can be maintained for the IRB registration database.

OHRP will provide browse-only access to the database containing all information collected in the IRB registration database, via a password protected mechanism, to all Federal departments and agencies that have adopted the Federal Policy for the Protection of Human Subjects, known as the ''Common Rule,'' which HHS has codified as 45 CFR part 46, subpart A.

V. Implementation

This rule is effective July 14, 2009. This protracted effective date is necessary to (a) allow refinement of the electronic registration system so that it corresponds to this final rule and to FDA's final rule, and (b) obtain OMB review and approval for the information collection requirements of this rule.

Initial registration with all required information must be submitted within 60 days of the effective date of the rule, by September 14, 2009. For any IRB currently registered with OHRP, the institution or organization operating the IRB must submit all information required under this rule by the three-year expiration date previously assigned by OHRP or within 90 days of any changes regarding the contact person who provided the IRB registration information or the IRB chairperson.

VI. Legal Authority

Section 491 of the Public Health Service Act authorizes the Secretary, by regulation, to require each entity which applies for a grant, contract, or cooperative agreement under the Act for any project or program which involves the conduct of biomedical or behavioral research involving human subjects to submit assurances satisfactory to the Secretary that it has established an IRB to review research conducted at or supported by the entity in order to protect the rights of the human subjects (42 U.S.C. 289(a)). Section 491 of the Public Health Service Act also authorizes the Secretary to establish a program under which requests for clarification and guidance with respect to ethical issues raised in connection with biomedical or behavioral research involving human subjects are responded to promptly and appropriately (42 U.S.C. 289(b)). These authorities are delegated to OHRP (67 FR 10216–18, March 6, 2002).

By requiring IRB registration, the rule will aid in the efficient implementation

of the Public Health Service Act's provisions regarding assurances and providing guidance and education to IRBs involved in human subjects research conducted or supported by HHS. Moreover, collection of the information required under the rule will enable OHRP to contact IRBs more quickly and efficiently on various issues, such as new regulatory requirements or policies or other matters related to the conduct of human subjects research. OHRP concludes that it has sufficient legal authority to issue this rule.

VII. Economic Impact Analysis

OHRP has examined the impact of the rule under Executive Order 12866 and the Regulatory Flexibility Act (5 U.S.C. 601–612) (as amended by subtitle D of the Small Business Regulatory Fairness Act of 1996 (Pub. L. 104–121)), and the Unfunded Mandates Reform Act of 1995 (Pub. L. 104–4).

Executive Order 12866 directs agencies to assess all costs and benefits of available regulatory alternatives and, when regulation is necessary, to select regulatory approaches that maximize net benefits (including potential economic, environmental, public health and safety, and other advantages; distributive impacts; and equity). OHRP believes that this final rule is not a significant regulatory action as defined by the Executive Order.

Under the Regulatory Flexibility Act, if a rule has a significant impact on a substantial number of small entities, an agency must analyze regulatory options that would minimize any significant impact of the rule on small entities. Because the required registration information is minimal and the costs associated with registration is low, OHRP certifies that the final rule will not have a significant economic impact on a substantial number of small entities.

Section 202(a) of the Unfunded Mandates Reform Act of 1995 requires that an agency prepare a written statement of anticipated costs and benefits before proposing any rule that may result in an expenditure by State, local, and tribal governments, in the aggregate, or by the private sector, of $100 million in any one year (adjusted annually for inflation). The current threshold after adjustment for inflation is $127 million, using the most current (2006) Implicit Price Deflator for the Gross Domestic Product. OHRP does not expect this final rule to result in any one-year expenditure that would meet or exceed this amount.

The rule requires IRBs designated under an assurance of compliance approved for Federalwide use by OHRP to register with HHS. The information sought through the registration process is minimal, consisting largely of the following: The name, mailing address, and street address (if different from the mailing address) for the institution or organization operating the IRB; the names, addresses, phone numbers, facsimile numbers, and electronic mail addresses of (i) the senior officer or head official of the institution or organization operating the IRB who is responsible for overseeing the activities performed by the IRB, and (ii) the contact person providing the registration information; the name, phone number, and electronic mail address of the IRB chairperson; and, the approximate numbers of all active research protocols, active protocols conducted or supported by HHS, and full-time equivalent positions devoted to the IRB's administrative activities.

OHRP estimates that initial IRB registration may require 1 hour to complete. If the average wage rate is $40 per hour, this means that each IRB will spend $40 for an initial registration ($40 per hour × 1 hour per initial registration).

OHRP estimates that the renewal or update of an IRB registration will require less time, especially if the IRB is only verifying existing information. If renewing or updating an IRB registration requires 30 minutes, then the cost of renewing or updating would be approximately $20 ($40 per hour × 0.5 hour per registration renewal or update).

Additionally, assuming that the maximum number of IRBs that will be subject to registration annually would be 6,000, OHRP estimates that 2,000 IRBs will complete one new registration and one update each year and the other 4,000 IRBs will complete two updates or renewals each year. The total annual burden costs for 6,000 IRBs are projected to be $280,000 (2,000 new IRB registrations × 1 hour × $40/hr = $80,000; 1 renewal/update of these 2,000 IRBs × 0.5 hr × $20/0.5 hr = $40,000; 4,000 IRBs will complete 2 updates/renewals each year, 4,000 IRBs × 0.5 hr × $20/0.5 hr × 2 = 160,000).

Given the minimal registration information that would be required and the low costs associated with registration, this rule is not a significant regulatory action, and OHRP certifies that the rule will not have a significant economic impact on a substantial number of small entities. The rule is not a significant regulatory action under Executive Order 12866 and does not require a Regulatory Flexibility Act analysis.

Because the total expenditure under the rule will not result in a one-year expenditure of $100 million or more, OHRP is not required to perform a cost-benefit analysis under the Unfunded Mandates Reform Act.

VIII. Environmental Impact

OHRP has determined that this action is of a type that does not individually or cumulatively have a significant effect on the human environment. Therefore, neither an environmental assessment nor an environmental impact statement is required.

IX. Paperwork Reduction Act

This rule contains information collection requirements that are subject to review by OMB under the Paperwork Reduction Act of 1995 (44 U.S.C. 3501–3520). In compliance with the Paperwork Reduction Act of 1995 (44 U.S.C. 3507(d)), OHRP will obtain OMB review and approval for the information collection requirements of this rule.

X. Federalism

OHRP has analyzed this rule in accordance with the principles set forth in Executive Order 13132. OHRP has determined that the rule does not contain policies that have substantial direct effects on the States, on the relationship between the National Government and the States, or on the distribution of power and responsibilities among the various levels of government. Accordingly, we have concluded that the rule does not contain policies that have federalism implications as defined in the order and, consequently, a federalism summary impact statement is not required.

List of Subjects in 45 CFR Part 46

Health—Clinical research, Medical research, Human research subjects, Reporting and recordkeeping requirements.

Dated: December 31, 2008.

Donald Wright,

Principal Deputy Assistant Secretary for Health.

Approved: January 6, 2009.

Michael O. Leavitt,

Secretary of Health and Human Services.

■ Accordingly, 45 CFR part 46 is amended as follows:

PART 46—PROTECTION OF HUMAN SUBJECTS

■ 1. The authority citation for 45 CFR part 46 continues to read as follows:

Authority: 5 U.S.C. 301; 42 U.S.C. 289; 42 U.S.C. 300v–1(b).

■ 2. Subpart E is added to part 46 to read as follows:

Subpart E—Registration of Institutional Review Boards

Sec.
46.501 What IRBs must be registered?
46.502 What information must be provided when registering an IRB?
46.503 When must an IRB be registered?
46.504 How must an IRB be registered?
46.505 When must IRB registration information be renewed or updated?

§ 46.501 What IRBs must be registered?

Each IRB that is designated by an institution under an assurance of compliance approved for federalwide use by the Office for Human Research Protections (OHRP) under § 46.103(a) and that reviews research involving human subjects conducted or supported by the Department of Health and Human Services (HHS) must be registered with HHS. An individual authorized to act on behalf of the institution or organization operating the IRB must submit the registration information.

§ 46.502 What information must be provided when registering an IRB?

The following information must be provided to HHS when registering an IRB:

(a) The name, mailing address, and street address (if different from the mailing address) of the institution or organization operating the IRB(s); and the name, mailing address, phone number, facsimile number, and electronic mail address of the senior officer or head official of that institution or organization who is responsible for overseeing activities performed by the IRB.

(b) The name, mailing address, phone number, facsimile number, and electronic mail address of the contact person providing the registration information.

(c) The name, if any, assigned to the IRB by the institution or organization, and the IRB's mailing address, street address (if different from the mailing address), phone number, facsimile number, and electronic mail address.

(d) The name, phone number, and electronic mail address of the IRB chairperson.

(e)(1) The approximate numbers of:

(i) All active protocols; and

(ii) Active protocols conducted or supported by HHS.

(2) For purpose of this regulation, an ''active protocol'' is any protocol for which the IRB conducted an initial review or a continuing review at a convened meeting or under an expedited review procedure during the preceding twelve months.

(f) The approximate number of full-time equivalent positions devoted to the IRB's administrative activities.

§ 46.503 When must an IRB be registered?

An IRB must be registered before it can be designated under an assurance approved for federalwide use by OHRP under § 46.103(a). IRB registration becomes effective when reviewed and accepted by OHRP. The registration will be effective for 3 years.

§ 46.504 How must an IRB be registered?

Each IRB must be registered electronically through *http://ohrp.cit.nih.gov/efile* unless an institution or organization lacks the ability to register its IRB(s) electronically. If an institution or organization lacks the ability to register an IRB electronically, it must send its IRB registration information in writing to OHRP.

§ 46.505 When must IRB registration information be renewed or updated?

(a) Each IRB must renew its registration every 3 years.

(b) The registration information for an IRB must be updated within 90 days after changes occur regarding the contact person who provided the IRB registration information or the IRB chairperson. The updated registration information must be submitted in accordance with § 46.504.

(c) Any renewal or update that is submitted to, and accepted by, OHRP begins a new 3-year effective period.

(d) An institution's or organization's decision to disband a registered IRB which it is operating also must be reported to OHRP in writing within 30 days after permanent cessation of the IRB's review of HHS-conducted or -supported research.

[FR Doc. E9–588 Filed 1–14–09; 8:45 am]

BILLING CODE 4150–36–P

FEDERAL COMMUNICATIONS COMMISSION

47 CFR Part 73

[MB Docket No. 05–312; FCC 08–256]

Digital Television Distributed Transmission System Technologies

AGENCY: Federal Communications Commission.

ACTION: Final rule; announcement of effective date.

SUMMARY: In this document, the Commission announces that the Office of Management and Budget (OMB) has approved, for a period of six months, the information collection(s) associated with section 73.626(f) of the rules, and that this rule will take effect as of the date of this notice. On December 5, 2008, the Commission published the summary document of the Report and Order, *In the Matter of the Digital Television Distributed Transmission System Technologies,* MB Docket No. 05–312, FCC 08–256, at 73 FR 74047. The Ordering Clause of the Report and Order stated that the Commission would publish a notice in the **Federal Register** announcing when OMB approval for this rule section which contains information collection requirements has been received and when the revised rule will take effect. This notice is consistent with the statement in the Report and Order.

DATES: Effective January 15, 2009.

FOR FURTHER INFORMATION CONTACT: For additional information, please contact Evan Baranoff, *Evan.Baranoff@fcc.gov,* of the Media Bureau, Policy Division, (202) 418–2120.

SUPPLEMENTARY INFORMATION: This document announces that, on December 29, 2008, OMB approved, for a period of six months, the information collection requirement(s) contained in Section 73.626(f) of the rules. The Commission publishes this notice to announce the effective date of this rule. If you have any comments on the burden estimates listed below, or how the Commission can improve the collections and reduce any burdens caused thereby, please contact Cathy Williams, Federal Communications Commission, Room 1–C823, 445 12th Street, SW., Washington, DC 20554. Please include OMB Control Numbers 3060–0027 and 3060–0029, in your correspondence. The Commission will also accept your comments via the Internet if you send them to *PRA@fcc.gov.*

To request materials in accessible formats for people with disabilities (Braille, large print, electronic files, audio format), send an e-mail to *fcc504@fcc.gov* or call the Consumer & Governmental Affairs Bureau at (202) 418–0530 (voice), (202) 418–0432 (TTY).

Synopsis

As required by the Paperwork Reduction Act of 1995 (44 U.S.C. 3507), the Commission is notifying the public that it received OMB approval on December 29, 2008, for the information collection requirement(s) contained in the Commission's rules at 47 CFR 73.626(f).

Under 5 CFR 1320, an agency may not conduct or sponsor a collection of

information unless it displays a current, valid OMB Control Number.

No person shall be subject to any penalty for failing to comply with a collection of information subject to the Paperwork Reduction Act that does not display a valid OMB Control Number.

The OMB Control Numbers are 3060–0027 and 3060–0029 and the total annual reporting burdens for respondents for these information collections are as follows:

OMB Control Numbers: 3060–0027.

OMB Approval Date: December 29, 2008.

Expiration Date: June 30, 2009.

Title: Application for Construction Permit for Commercial Broadcast Station, FCC Form 301.

Form Number: FCC Form 301.

Type of Review: Revision to a currently approved collection.

Respondents: Business or other for profit entities; Not for profit institutions.

Number of Respondents/Responses: 4,378 respondents; 7,814 responses.

Estimated Hours per Response: 1–5 hours per response.

Frequency of Response: On occasion reporting requirement; Third party disclosure requirement.

Total Annual Burden: 14,808 hours.

Total Annual Cost: $52,580,197.

Obligation to Respond: Required to obtain or retain benefits. The statutory authority for this information collection is contained in Sections 154(i), 303 and 308 of the Communications Act of 1934, as amended.

Nature and Extent of Confidentiality: There is no need for confidentiality with this collection of information.

Privacy Act Assessment: No impact(s).

Needs and Uses: On November 3, 2008, the Commission adopted a Report and Order, In the Matter of Digital Television Distributed Transmission System Technologies; MB Docket No. 05–312, FCC 08–256 (released Nov. 7, 2008). In this Report and Order, the Commission adopts rules for the use of distributed transmission system (''DTS'') technologies in the digital television (''DTV'') service. See 47 CFR 73.626. DTS technology allows stations to employ multiple synchronized transmitters spread around a station's service area, rather than the current single-transmitter approach. Each transmitter would broadcast the station's DTV signal on the same channel, similar to analog TV booster stations but more efficiently. Due to the synchronization of the transmitted signals, DTV receivers should be able to treat the multiple signals as reflections or ''ghosts'' and use ''adaptive equalizer'' circuitry to cancel or combine them to produce a single signal.

Congress has mandated that after February 17, 2009, full-power television broadcast stations must transmit only in digital signals, and may no longer transmit analog signals. Emergency OMB approval is necessary for this collection to allow full-power DTV stations to use DTS technologies to meet their statutory responsibilities and begin operations on their final, post-transition (digital) channels by their construction deadlines. DTS will provide DTV broadcasters with an important tool for providing optimum signal coverage for their viewers. For some broadcasters that are changing channels or transmitting locations for their digital service, DTS may offer the best option for continuing to provide over-the-air service to current analog viewers, as well as for reaching viewers that have historically been unable to receive a good signal due to terrain or other interference.

FCC Form 301 is being revised to accommodate the filing of DTS applications.

OMB Control Numbers: 3060–0029.

OMB Approval Date: December 29, 2008.

Expiration Date: June 30, 2009.

Title: Application for TV Broadcast Station License, Form FCC 302–TV; Application for DTV Broadcast Station License, FCC Form 302–DTV; Application for Construction Permit for Reserved Channel Noncommercial Educational Broadcast Station, FCC Form 340; Application for Authority to Construct or Make Changes in an FM Translator or FM Booster Station, FCC Form 349.

Form Number: FCC Forms 302–TV, 302–DTV, 340 and 349.

Type of Review: Revision of a currently approved collection.

Respondents: Business or other for profit entities; Not for profit institutions.

Number of Respondents/Responses: 4,425 respondents; 6,425 responses.

Estimated Hours per Response: 1–4 hours per response.

Frequency of Response: Recordkeeping requirement; On occasion reporting requirement; Third party disclosure requirement.

Total Annual Burden: 14,450 hours.

Annual Burden Cost: $21,869,625.

Obligation to Respond: Required to obtain or retain benefits. The statutory authority for this information collection is contained in Sections 154(i), 303 and 308 of the Communications Act of 1934, as amended.

Nature and Extent of Confidentiality: There is no need for confidentiality with this collection of information.

Privacy Act Assessment: No impact(s).

Needs and Uses: On November 3, 2008, the Commission adopted a Report and Order in the Matter of Digital Television Distributed Transmission System Technologies; MB Docket No. 05–312, FCC 08–256 (released Nov. 7, 2008). In this Report and Order, the Commission adopts rules for the use of distributed transmission system (''DTS'') technologies in the digital television (''DTV'') service. See 47 CFR 73.626. DTS technology allows stations to employ multiple synchronized transmitters spread around a station's service area, rather than the current single-transmitter approach. Each transmitter would broadcast the station's DTV signal on the same channel, similar to analog TV booster stations but more efficiently. Due to the synchronization of the transmitted signals, DTV receivers should be able to treat the multiple signals as reflections or ''ghosts'' and use ''adaptive equalizer'' circuitry to cancel or combine them to produce a single signal.

Congress has mandated that after February 17, 2009, full-power television broadcast stations must transmit only in digital signals, and may no longer transmit analog signals. Emergency OMB approval is necessary for this collection to allow full-power DTV stations to use DTS technologies to meet their statutory responsibilities and begin operations on their final, post-transition (digital) channels by their construction deadlines. DTS will provide DTV broadcasters with an important tool for providing optimum signal coverage for their viewers. For some broadcasters that are changing channels or transmitting locations for their digital service, DTS may offer the best option for continuing to provide over-the-air service to current analog viewers, as well as for reaching viewers that have historically been unable to receive a good signal due to terrain or other interference.

FCC Form 340 is being revised to accommodate the filing of DTS applications.

Federal Communications Commission.

Marlene H. Dortch,

Secretary.

[FR Doc. E9–796 Filed 1–14–09; 8:45 am]

BILLING CODE 6712–01–P

DEPARTMENT OF DEFENSE

Defense Acquisition Regulations System

48 CFR Parts 202 and 218

RIN 0750–AG19

Defense Federal Acquisition Regulation Supplement; Contract Actions Supporting Contingency Operations or Facilitating Defense Against or Recovery From Nuclear, Biological, Chemical, or Radiological Attack (DFARS Case 2008–D026)

AGENCY: Defense Acquisition Regulations System, Department of Defense (DoD).

ACTION: Final rule.

SUMMARY: DoD has issued a final rule amending the Defense Federal Acquisition Regulation Supplement (DFARS) to address determination requirements with regard to the use of emergency acquisition flexibilities for contract actions supporting contingency operations or facilitating defense against or recovery from nuclear, biological, chemical, or radiological attack. The rule lowers the DoD level of approval for such determinations.

DATES: *Effective Date:* January 15, 2009.

FOR FURTHER INFORMATION CONTACT: Ms. Angie Sawyer, Defense Acquisition Regulations System, OUSD(AT&L)DPAP(DARS), IMD 3D139, 3062 Defense Pentagon, Washington, DC 20301–3062. Telephone 703–602–8384; facsimile 703–602–7887. Please cite DFARS Case 2008–D026.

SUPPLEMENTARY INFORMATION:

A. Background

Subpart 18.2 of the Federal Acquisition Regulation (FAR) provides for certain flexibilities in the execution of contracts for supplies and services that are determined by the head of the agency to be used to support a contingency operation or to facilitate defense against or recovery from nuclear, biological, chemical, or radiological attack. In accordance with the delegation of authority provision at FAR 1.108(b), this final rule adds a new section at DFARS 218.270 to authorize heads of DoD contracting activities to make the determination addressed in FAR Subpart 18.2. The rule will facilitate the use of streamlined acquisition procedures in emergency situations.

This rule was not subject to Office of Management and Budget review under Executive Order 12866, dated September 30, 1993.

B. Regulatory Flexibility Act

This rule will not have a significant cost or administrative impact on contractors or offerors, or a significant effect beyond the internal operating procedures of DoD. Therefore, publication for public comment under 41 U.S.C. 418b is not required. However, DoD will consider comments from small entities concerning the affected DFARS subparts in accordance with 5 U.S.C. 610. Such comments should cite DFARS Case 2008–D026.

C. Paperwork Reduction Act

The Paperwork Reduction Act does not apply, because the rule does not impose any information collection requirements that require the approval of the Office of Management and Budget under 44 U.S.C. 3501, *et seq.*

List of Subjects in 48 CFR Parts 202 and 218

Government procurement.

Michele P. Peterson,

Editor, Defense Acquisition Regulations System.

■ Therefore, 48 CFR parts 202 and 218 are amended as follows:

■ 1. The authority citation for 48 CFR parts 202 and 218 continues to read as follows:

Authority: 41 U.S.C. 421 and 48 CFR Chapter 1.

PART 202—DEFINITIONS OF WORDS AND TERMS

202.101 [Amended]

■ 2. Section 202.101 is amended in the definition of ''Head of the agency'' by adding at the end ''(For emergency acquisition flexibilities, *see* 218.270.)''.

PART 218—EMERGENCY ACQUISITIONS

■ 3. Section 218.270 is added to read as follows:

218.270 Head of contracting activity determinations.

For contract actions supporting contingency operations or facilitating defense against or recovery from nuclear, biological, chemical, or radiological attack, the term ''head of the agency'' is replaced with ''head of the contracting activity,'' as defined in FAR 2.101, in the following locations:

(a) FAR 2.101:

(1) Definition of ''Micro-purchase threshold,'' paragraph (3).

(2) Definition of ''Simplified acquisition threshold.''

(b) FAR 12.102(f).

(c) FAR 13.201(g).

(d) FAR 13.500(e).

(e) FAR 18.2.

[FR Doc. E9–676 Filed 1–14–09; 8:45 am]

BILLING CODE 5001–08–P

DEPARTMENT OF DEFENSE

Defense Acquisition Regulations System

48 CFR Part 203

RIN 0750–AG21

Defense Federal Acquisition Regulation Supplement; Separation of Senior Roles in Source Selection (DFARS Case 2008–D037)

AGENCY: Defense Acquisition Regulations System, Department of Defense (DoD).

ACTION: Final rule.

SUMMARY: DoD has issued a final rule amending the Defense Federal Acquisition Regulation Supplement (DFARS) to address requirements for the separation of functions in source selection. The rule requires the military departments and defense agencies to certify every two years that no senior leader has performed multiple roles in the acquisition of a major weapon system or major service.

DATES: *Effective Date:* January 15, 2009.

FOR FURTHER INFORMATION CONTACT: Ms. Angie Sawyer, Defense Acquisition Regulations System, OUSD(AT&L)DPAP(DARS), IMD 3C132, 3062 Defense Pentagon, Washington, DC 20301–3062. Telephone 703–602–8384; facsimile 703–602–7887. Please cite DFARS Case 2008–D037.

SUPPLEMENTARY INFORMATION:

A. Background

DFARS 203.170(a) prohibits DoD senior leaders from performing multiple roles in major source selections. To reinforce this policy, this final rule adds a requirement for DoD departments and agencies to certify every two years that no senior leader has performed multiple roles in the acquisition of a major weapon system or major service.

This rule was not subject to Office of Management and Budget review under Executive Order 12866, dated September 30, 1993.

B. Regulatory Flexibility Act

This rule will not have a significant cost or administrative impact on contractors or offerors, or a significant effect beyond the internal operating procedures of DoD. Therefore, publication for public comment under

41 U.S.C. 418b is not required. However, DoD will consider comments from small entities concerning the affected DFARS subpart in accordance with 5 U.S.C. 610. Such comments should cite DFARS Case 2008–D037.

C. Paperwork Reduction Act

The Paperwork Reduction Act does not apply, because the rule does not impose any information collection requirements that require the approval of the Office of Management and Budget under 44 U.S.C. 3501, *et seq.*

List of Subjects in 48 CFR Part 203

Government procurement.

Michele P. Peterson,

Editor, Defense Acquisition Regulations System.

■ Therefore, 48 CFR part 203 is amended as follows:

PART 203—IMPROPER BUSINESS PRACTICES AND PERSONAL CONFLICTS OF INTEREST

■ 1. The authority citation for 48 CFR part 203 continues to read as follows:

Authority: 41 U.S.C. 421 and 48 CFR Chapter 1.

■ 2. Section 203.170 is amended by revising paragraph (a) to read as follows:

203.170 Business practices.

* * * * *

(a) Senior leaders shall not perform multiple roles in source selection for a major weapon system or major service acquisition. Departments and agencies shall certify every 2 years that no senior leader has performed multiple roles in the acquisition of a major weapon system or major service. Completed certifications shall be forwarded to the Director, Defense Procurement, in accordance with the procedures at PGI 203.170.

* * * * *

[FR Doc. E9–666 Filed 1–14–09; 8:45 am]

BILLING CODE 5001–08–P

DEPARTMENT OF DEFENSE

Defense Acquisition Regulations System

48 CFR Parts 203, 209, and 252

RIN 0750–AG07

Defense Federal Acquisition Regulation Supplement; Senior DoD Officials Seeking Employment With Defense Contractors (DFARS Case 2008–D007)

AGENCY: Defense Acquisition Regulations System, Department of Defense (DoD).

ACTION: Interim rule with request for comments.

SUMMARY: DoD has issued an interim rule amending the Defense Federal Acquisition Regulation Supplement (DFARS) to implement Section 847 of the National Defense Authorization Act for Fiscal Year 2008. Section 847 addresses requirements for senior DoD officials to obtain a post-employment ethics opinion before accepting a position from a DoD contractor within two years after leaving DoD service.

DATES: *Effective date:* January 15, 2009.

Comment date: Comments on the interim rule should be submitted in writing to the address shown below on or before March 16, 2009, to be considered in the formation of the final rule.

ADDRESSES: You may submit comments, identified by DFARS Case 2008–D007, using any of the following methods:

○ *Federal eRulemaking Portal: http://www.regulations.gov.* Follow the instructions for submitting comments.

○ *E-mail: dfars@osd.mil.* Include DFARS Case 2008–D007 in the subject line of the message.

○ *Fax:* 703–602–7887.

○ *Mail:* Defense Acquisition Regulations System, Attn: Ms. Angie Sawyer, OUSD(AT&L)DPAP(DARS), IMD 3D139, 3062 Defense Pentagon, Washington, DC 20301–3062.

○ *Hand Delivery/Courier:* Defense Acquisition Regulations System, Crystal Square 4, Suite 200A, 241 18th Street, Arlington, VA 22202–3402.

Comments received generally will be posted without change to *http://www.regulations.gov,* including any personal information provided.

FOR FURTHER INFORMATION CONTACT: Ms. Angie Sawyer, 703–602–8484.

SUPPLEMENTARY INFORMATION:

A. Background

This interim rule implements Section 847 of the National Defense Authorization Act for Fiscal Year 2008 (Pub. L. 110–181). Section 847 requires that a DoD official, who has participated personally and substantially in a DoD acquisition exceeding $10 million or who has held a key acquisition position, must obtain a written opinion from a DoD ethics counselor regarding the activities that the official may undertake on behalf of a DoD contractor within two years after leaving DoD service. In addition, Section 847 prohibits a DoD contractor from providing compensation to such a DoD official without first determining that the official has received or appropriately requested a post-employment ethics opinion.

This rule was not subject to Office of Management and Budget review under Executive Order 12866, dated September 30, 1993.

B. Regulatory Flexibility Act

DoD does not expect this rule to have a significant economic impact on a substantial number of small entities within the meaning of the Regulatory Flexibility Act, 5 U.S.C. 601, *et seq.*, because the requirement to verify that a prospective employee has received or requested the appropriate DoD ethics opinion should involve minimal effort on the part of a contractor. Therefore, DoD has not performed an initial regulatory flexibility analysis. DoD invites comments from small businesses and other interested parties. DoD also will consider comments from small entities concerning the affected DFARS subparts in accordance with 5 U.S.C. 610. Such comments should be submitted separately and should cite DFARS Case 2008–D007.

C. Paperwork Reduction Act

The Paperwork Reduction Act does not apply, because the rule does not impose any information collection requirements that require the approval of the Office of Management and Budget under 44 U.S.C. 3501, *et seq.*

D. Determination To Issue an Interim Rule

A determination has been made under the authority of the Secretary of Defense that urgent and compelling reasons exist to publish an interim rule prior to affording the public an opportunity to comment. This interim rule implements Section 847 of the National Defense Authorization Act for Fiscal Year 2008 (Pub. L. 110–181). Section 847 requires that DoD officials that have participated personally and substantially in a DoD acquisition exceeding $10 million, or that have held certain key acquisition positions, must obtain a written opinion from the appropriate DoD ethics

counselor before accepting compensation from a DoD contractor within two years after leaving DoD service. In addition, Section 847 prohibits a DoD contractor from providing compensation to such a DoD official without first determining that the official has received or appropriately requested a post-employment ethics opinion. Comments received in response to this interim rule will be considered in the formation of the final rule.

List of Subjects in 48 CFR Parts 203, 209, and 252

Government procurement.

Michele P. Peterson,

Editor, Defense Acquisition Regulations System.

■ Therefore, 48 CFR Parts 203, 209, and 252 are amended as follows:

■ 1. The authority citation for 48 CFR Parts 203, 209, and 252 continues to read as follows:

Authority: 41 U.S.C. 421 and 48 CFR Chapter 1.

PART 203—IMPROPER BUSINESS PRACTICES AND PERSONAL CONFLICTS OF INTEREST

■ 2. Section 203.104–4 is added to read as follows:

203.104–4 Disclosure, protection, and marking of contractor bid or proposal information and source selection information.

(d)(3) For purposes of FAR 3.104–4(d)(3) only, DoD follows the notification procedures in FAR 27.404–5(a). However, FAR 27.404–5(a)(1) does not apply to DoD.

203.104–5 [Removed]

■ 3. Section 203.104–5 is removed.

■ 4. Sections 203.171 through 203.171–4 are added to read as follows:

203.171 Senior DoD officials seeking employment with defense contractors.

203.171–1 Scope.

This section implements Section 847 of the National Defense Authorization Act for Fiscal Year 2008 (Public Law 110–181).

203.171–2 Definition.

Covered DoD official as used in this section, is defined in the clause at 252.203–7000, Requirements Relating to Compensation of Former DoD Officials.

203.171–3 Policy.

(a) A DoD official covered by the requirements of Section 847 of Public Law 110–181 (a ''covered DoD official'') who, within 2 years after leaving DoD service, expects to receive compensation from a DoD contractor, shall, prior to accepting such compensation, request a written opinion from the appropriate DoD ethics counselor regarding the applicability of post-employment restrictions to activities that the official may undertake on behalf of a contractor.

(b) A DoD contractor may not knowingly provide compensation to a covered DoD official within 2 years after the official leaves DoD service unless the contractor first determines that the official has received, or has requested at least 30 days prior to receiving compensation from the contractor, the post-employment ethics opinion described in paragraph (a) of this section.

(c) If a DoD contractor knowingly fails to comply with the requirements of the clause at 252.203–7000, administrative and contractual actions may be taken, including cancellation of a procurement, rescission of a contract, or initiation of suspension or debarment proceedings.

203.171–4 Contract clause.

Use the clause at 252.203–7000, Requirements Relating to Compensation of Former DoD Officials, in all solicitations and contracts.

PART 209—CONTRACTOR QUALIFICATIONS

■ 5. Section 209.406–2 is amended as follows:

■ a. By redesignating paragraph (a) as paragraph (1); and

■ b. By adding paragraph (2) to read as follows:

209.406–2 Causes for debarment.

* * * * *

(2) Any contractor that knowingly provides compensation to a former DoD official in violation of Section 847 of the National Defense Authorization Act for Fiscal Year 2008 (Pub. L. 110–181) may face suspension and debarment proceedings in accordance with 41 U.S.C. 423(e)(3)(A)(iii).

PART 252—SOLICITATION PROVISIONS AND CONTRACT CLAUSES

■ 6. Section 252.203–7000 is added to read as follows:

252.203–7000 Requirements Relating to Compensation of Former DoD Officials.

As prescribed in 203.171–4, use the following clause:

REQUIREMENTS RELATING TO COMPENSATION OF FORMER DOD OFFICIALS (JAN 2009)

(a) *Definition. Covered DoD official,* as used in this clause, means an individual that—

(1) Leaves or left DoD service on or after January 28, 2008; and

(2)(i) Participated personally and substantially in an acquisition as defined in 41 U.S.C. 403(16) with a value in excess of $10 million, and serves or served—

(A) In an Executive Schedule position under subchapter II of chapter 53 of Title 5, United States Code;

(B) In a position in the Senior Executive Service under subchapter VIII of chapter 53 of Title 5, United States Code; or

(C) In a general or flag officer position compensated at a rate of pay for grade O–7 or above under section 201 of Title 37, United States Code; or

(ii) Serves or served in DoD in one of the following positions: Program manager, deputy program manager, procuring contracting officer, administrative contracting officer, source selection authority, member of the source selection evaluation board, or chief of a financial or technical evaluation team for a contract in an amount in excess of $10 million.

(b) The Contractor shall not knowingly provide compensation to a covered DoD official within 2 years after the official leaves DoD service, without first determining that the official has sought and received, or has not received after 30 days of seeking, a written opinion from the appropriate DoD ethics counselor regarding the applicability of post-employment restrictions to the activities that the official is expected to undertake on behalf of the Contractor.

(c) Failure by the Contractor to comply with paragraph (b) of this clause may subject the Contractor to rescission of this contract, suspension, or debarment in accordance with 41 U.S.C. 423(e)(3).

(End of clause)

■ 7. Section 252.212–7001 is amended as follows:

■ a. By revising the clause date to read ''(JAN 2009)'';

■ b. By redesignating paragraphs (b)(1) through (21) as paragraphs (b)(2) through (22) respectively;

■ c. By adding a new paragraph (b)(1);

■ d. In newly designated paragraph (b)(5) by removing ''(JUN 2005)'' and adding in its place ''(JAN 2009)''; and

■ e. In newly designated paragraph (b)(13)(i) by removing ''(MAR 2007)'' and adding in its place ''(JAN 2009)''. The new paragraph (b)(1) reads as follows:

252.212–7001 Contract Terms and Conditions Required to Implement Statutes or Executive Orders Applicable to Defense Acquisitions of Commercial Items.

* * * * *

(b) * * *

(1) _____252.203–7000, Requirements Relating to Compensation

of Former DoD Officials (JAN 2009) (Section 847 of Pub. L. 110–181).

* * * * *

[FR Doc. E9–679 Filed 1–14–09; 8:45 am]

BILLING CODE 5001–08–P

DEPARTMENT OF DEFENSE

Defense Acquisition Regulations System

48 CFR Parts 203 and 252

RIN 0750–AG09

Defense Federal Acquisition Regulation Supplement; Whistleblower Protections for Contractor Employees (DFARS Case 2008–D012)

AGENCY: Defense Acquisition Regulations System, Department of Defense (DoD).

ACTION: Interim rule with request for comments.

SUMMARY: DoD has issued an interim rule amending the Defense Federal Acquisition Regulation Supplement (DFARS) to implement Section 846 of the National Defense Authorization Act for Fiscal Year 2008 and Section 842 of the National Defense Authorization Act for Fiscal Year 2009. These laws address protections for contractor employees who disclose information to Government officials with regard to waste or mismanagement, danger to public health or safety, or violation of law related to a DoD contract.

DATES: *Effective date:* January 15, 2009.

Comment date: Comments on the interim rule should be submitted in writing to the address shown below on or before March 16, 2009, to be considered in the formation of the final rule.

ADDRESSES: You may submit comments, identified by DFARS Case 2008–D012, using any of the following methods:

○ *Federal eRulemaking Portal: http://www.regulations.gov.* Follow the instructions for submitting comments.

○ *E-mail: dfars@osd.mil.* Include DFARS Case 2008–D012 in the subject line of the message.

○ *Fax:* 703–602–7887.

○ *Mail:* Defense Acquisition Regulations System, Attn: Ms. Angie Sawyer, OUSD (AT&L) DPAP (DARS), IMD 3D139, 3062 Defense Pentagon, Washington, DC 20301–3062.

○ *Hand Delivery/Courier:* Defense Acquisition Regulations System, Crystal Square 4, Suite 200A, 241 18th Street, Arlington, VA 22202–3402.

Comments received generally will be posted without change to *http://www.regulations.gov,* including any personal information provided.

FOR FURTHER INFORMATION CONTACT: Ms. Angie Sawyer, 703–602–8484.

SUPPLEMENTARY INFORMATION:

A. Background

10 U.S.C. 2409 and 41 U.S.C. 251 *et seq.* prohibit Government contractors from discharging, demoting, or otherwise discriminating against employees as a reprisal for disclosing to Government officials information relating to a substantial violation of law related to a contract. 10 U.S.C. 2409 and 41 U.S.C. 251 *et seq.* are implemented in Subpart 3.9 of the Federal Acquisition Regulation. Section 846 of the National Defense Authorization Act for Fiscal Year 2008 (Pub. L. 110–181) and Section 842 of the National Defense Authorization Act for Fiscal Year 2009 (Pub. L. 110–417) amended 10 U.S.C. 2409 to establish protections for DoD contractor employees that differ from those specified in 41 U.S.C. 251 *et seq.* and the Federal Acquisition Regulation. Therefore, this interim rule adds a new DFARS subpart to address DoD requirements related to whistleblower protections. The differences between the FAR and the new DFARS policy include: Expansion of the types of information to which the protections apply; expansion of the categories of Government officials to whom information may be disclosed without reprisal; establishment of time periods within which the Inspector General and the agency head must take action with regard to a complaint filed by a contractor employee; establishment of a de novo right of action in federal district court for contractor employees who have exhausted their administrative remedies under 10 U.S.C. 2409; and addition of a contract clause requiring contractors to inform employees in writing of their whistleblower rights and protections.

This rule was not subject to Office of Management and Budget review under Executive Order 12866, dated September 30, 1993.

B. Regulatory Flexibility Act

DoD does not expect this rule to have a significant economic impact on a substantial number of small entities within the meaning of the Regulatory Flexibility Act, 5 U.S.C. 601, *et seq.* Although the rule contains a new requirement for contractors to inform employees in writing of their whistleblower rights and protections, compliance with this requirement is not expected to have a significant cost or administrative impact on contractors. Therefore, DoD has not performed an initial regulatory flexibility analysis. DoD invites comments from small businesses and other interested parties. DoD also will consider comments from small entities concerning the affected DFARS subparts in accordance with 5 U.S.C. 610. Such comments should be submitted separately and should cite DFARS Case 2008–D012.

C. Paperwork Reduction Act

The Paperwork Reduction Act does not apply, because the rule does not impose any information collection requirements that require the approval of the Office of Management and Budget under 44 U.S.C. 3501, *et seq.*

D. Determination To Issue an Interim Rule

A determination has been made under the authority of the Secretary of Defense that urgent and compelling reasons exist to publish an interim rule prior to affording the public an opportunity to comment. This interim rule implements Section 846 of the National Defense Authorization Act for Fiscal Year 2008 (Pub. L. 110–181) and Section 842 of the National Defense Authorization Act for Fiscal Year 2009 (Pub. L. 110–417). These laws address whistleblower protections for DoD contractor employees and require DoD to ensure that DoD contractors inform their employees in writing of whistleblower rights and protections. Comments received in response to this interim rule will be considered in the formation of the final rule.

List of Subjects in 48 CFR Parts 203 and 252

Government procurement.

Michele P. Peterson,

Editor, Defense Acquisition Regulations System.

■ Therefore, 48 CFR parts 203 and 252 are amended as follows:

■ 1. The authority citation for 48 CFR Parts 203 and 252 continues to read as follows:

Authority: 41 U.S.C. 421 and 48 CFR Chapter 1.

PART 203—IMPROPER BUSINESS PRACTICES AND PERSONAL CONFLICTS OF INTEREST

■ 2. Subpart 203.9 is added to read as follows:

Subpart 203.9—Whistleblower Protections for Contractor Employees

Sec.

203.900 Scope of subpart.
203.903 Policy.
203.904 Procedures for filing complaints.

203.905 Procedures for investigating complaints.
203.906 Remedies.
203.970 Contract clause.

Subpart 203.9—Whistleblower Protections for Contractor Employees

203.900 Scope of subpart.

This subpart implements 10 U.S.C. 2409 as amended by Section 846 of the National Defense Authorization Act for Fiscal Year 2008 (Pub. L. 110–181) and Section 842 of the National Defense Authorization Act for Fiscal Year 2009 (Pub. L. 110–417).

203.903 Policy.

The following policy applies to DoD instead of the policy at FAR 3.903:

(1) 10 U.S.C. 2409 prohibits contractors from discharging, demoting, or otherwise discriminating against an employee as a reprisal for disclosing, to any of the following entities, information that the employee reasonably believes is evidence of gross mismanagement of a DoD contract, a gross waste of DoD funds, a substantial and specific danger to public health or safety, or a violation of law related to a DoD contract (including the competition for or negotiation of a contract):

(i) A Member of Congress.

(ii) A representative of a committee of Congress.

(iii) An Inspector General that receives funding from or has oversight over contracts awarded for or on behalf of DoD.

(iv) The Government Accountability Office.

(v) A DoD employee responsible for contract oversight or management.

(vi) An authorized official of an agency or the Department of Justice.

(2) A contracting officer who receives a complaint of reprisal of the type described in paragraph (1) of this section shall forward it to legal counsel or to the appropriate party in accordance with agency procedures.

203.904 Procedures for filing complaints.

In addition to the procedures at FAR 3.904, any contractor employee who believes that he or she has been discharged, demoted, or otherwise discriminated against contrary to the policy in 203.903 may file a complaint with the DoD Inspector General.

203.905 Procedures for investigating complaints.

The following procedures apply to DoD instead of the procedures at FAR 3.905:

(1) The DoD Inspector General will make a determination as to whether a complaint is frivolous or merits further investigation.

(2) If the DoD Inspector General determines that a complaint merits further investigation, the DoD Inspector General will—

(i) Notify the complainant, the contractor alleged to have committed the violation, and the head of the agency;

(ii) Conduct an investigation; and

(iii) Provide a written report of findings to the complainant, the contractor alleged to have committed the violation, and the head of the agency.

(3) The DoD Inspector General—

(i) Will determine that the complaint is frivolous or will submit the report addressed in paragraph (2) of this section within 180 days after receiving the complaint; and

(ii) If unable to submit a report within 180 days, will submit the report within the additional time period to which the person submitting the complaint agrees.

203.906 Remedies.

(1) Not later than 30 days after receiving a DoD Inspector General report in accordance with 203.905, the head of the agency—

(i) Shall determine whether sufficient basis exists to conclude that the contractor has subjected one of its employees to a reprisal as prohibited by 203.903; and

(ii) Shall issue an order denying relief or shall take one or more of the actions specified in FAR 3.906(a).

(2) If the head of the agency issues an order denying relief or has not issued an order within 210 days after the submission of the complaint or within 30 days after the expiration of an extension of time granted in accordance with 203.905(3)(ii), and there is no showing that such delay is due to the bad faith of the complainant—

(i) The complainant shall be deemed to have exhausted all administrative remedies with respect to the complaint; and

(ii) The complainant may bring a de novo action at law or equity against the contractor to seek compensatory damages and other relief available under 10 U.S.C. 2409 in the appropriate district court of the United States, which shall have jurisdiction over such an action without regard to the amount in controversy. Such an action shall, at the request of either party to the action, be tried by the court with a jury.

(3) An Inspector General determination and an agency head order denying relief under paragraph (2) of this section shall be admissible in evidence in any de novo action at law or equity brought pursuant to 10 U.S.C. 2409(c).

203.970 Contract clause.

Use the clause at 252.203–7002, Requirement to Inform Employees of Whistleblower Rights, in all solicitations and contracts.

PART 252—SOLICITATION PROVISIONS AND CONTRACT CLAUSES

■ 3. Section 252.203–7002 is added to read as follows:

252.203–7002 Requirement to Inform Employees of Whistleblower Rights.

As prescribed in 203.970, use the following clause:

REQUIREMENT TO INFORM EMPLOYEES OF WHISTLEBLOWER RIGHTS (JAN 2009)

The Contractor shall inform its employees in writing of employee whistleblower rights and protections under 10 U.S.C. 2409, as described in Subpart 203.9 of the Defense Federal Acquisition Regulation Supplement.

(End of clause)

[FR Doc. E9–672 Filed 1–14–09; 8:45 am]

BILLING CODE 5001–08–P

DEPARTMENT OF DEFENSE

Defense Acquisition Regulations System

48 CFR Parts 204 and 252

RIN 0750–AF98

Defense Federal Acquisition Regulation Supplement; U.S.-International Atomic Energy Agency Additional Protocol (DFARS Case 2004–D003)

AGENCY: Defense Acquisition Regulations System, Department of Defense (DoD).

ACTION: Final rule.

SUMMARY: DoD has issued a final rule amending the Defense Federal Acquisition Regulation Supplement (DFARS) to add a contract clause requiring a contractor to notify DoD if the contractor is required to report its activities under the U.S.-International Atomic Energy Agency Additional Protocol. The clause will be included in contracts for research and development or major defense acquisition programs involving fissionable materials, other radiological source materials, or technologies directly related to nuclear power production.

DATES: *Effective Date:* January 15, 2009.

FOR FURTHER INFORMATION CONTACT: Ms. Michele Peterson, Defense Acquisition Regulations System, OUSD (AT&L)

DPAP (DARS), IMD 3D139, 3062 Defense Pentagon, Washington, DC 20301–3062. Telephone 703–602–0311; facsimile 703–602–7887. Please cite DFARS Case 2004–D003.

SUPPLEMENTARY INFORMATION:

A. Background

Under the U.S.-International Atomic Energy Agency Additional Protocol (U.S.-IAEA AP), the United States is required to declare a wide range of public and private nuclear-related activities to the IAEA and potentially provide access to IAEA inspectors for verification purposes. The Department of Commerce issued a final rule at 73 FR 65120 on October 31, 2008, to implement the U.S.-IAEA AP.

The U.S.-IAEA AP permits the United States unilaterally to declare exclusions from inspection requirements for activities with direct national security significance. This DFARS rule contains a contract clause requiring a contractor to notify the applicable DoD program manager if the contractor is required to report any of its activities under the U.S.-IAEA AP. Upon such a notification, DoD will determine if access may be granted to IAEA inspectors, or if a national security exclusion should be applied.

DoD published a proposed rule at 73 FR 48185 on August 18, 2008. DoD received no comments on the proposed rule. DoD has adopted the proposed rule as a final rule with minor changes to clarify the text and to update references to a related DoD publication.

This rule was not subject to Office of Management and Budget review under Executive Order 12866, dated September 30, 1993.

B. Regulatory Flexibility Act

DoD certifies that this final rule will not have a significant economic impact on a substantial number of small entities within the meaning of the Regulatory Flexibility Act, 5 U.S.C. 601, *et seq.*, because the rule applies only to those DoD contractors involved in certain nuclear-related activities. The rule provides for exceptions to inspection requirements that might otherwise apply to such contractors, if DoD determines that an exception is necessary in the interest of national security.

C. Paperwork Reduction Act

This final rule contains a new information collection requirement. The Office of Management and Budget has approved the information collection under Control Number 0704–0454.

List of Subjects in 48 CFR Parts 204 and 252

Government procurement.

Michele P. Peterson,

Editor, Defense Acquisition Regulations System.

■ Therefore, 48 CFR parts 204 and 252 are amended as follows:

■ 1. The authority citation for 48 CFR parts 204 and 252 continues to read as follows:

Authority: 41 U.S.C. 421 and 48 CFR Chapter 1.

PART 204—ADMINISTRATIVE MATTERS

■ 2. Sections 204.470 through 204.470–3 are added to read as follows:

204.470 U.S.-International Atomic Energy Agency Additional Protocol.

204.470–1 General.

Under the U.S.-International Atomic Energy Agency Additional Protocol (U.S.-IAEA AP), the United States is required to declare a wide range of public and private nuclear-related activities to the IAEA and potentially provide access to IAEA inspectors for verification purposes.

204.470–2 National security exclusion.

(a) The U.S.-IAEA AP permits the United States unilaterally to declare exclusions from inspection requirements for activities, or locations or information associated with such activities, with direct national security significance.

(b) In order to ensure that all relevant activities are reviewed for direct national security significance, both current and former activities, and associated locations or information, are to be considered for applicability for a national security exclusion.

(c) If a DoD program manager receives notification from a contractor that the contractor is required to report any of its activities in accordance with the U.S.-IAEA AP, the program manager will—

(1) Conduct a security assessment to determine if, and by what means, access may be granted to the IAEA; or

(2) Provide written justification to the component or agency treaty office for application of the national security exclusion at that location to exclude access by the IAEA, in accordance with DoD Instruction 2060.03, Application of the National Security Exclusion to the Agreements Between the United States of America and the International Atomic Energy Agency for the Application of Safeguards in the United States of America.

204.470–3 Contract clause.

Use the clause at 252.204–7010, Requirement for Contractor to Notify DoD if the Contractor's Activities are Subject to Reporting Under the U.S.-International Atomic Energy Agency Additional Protocol, in solicitations and contracts for research and development or major defense acquisition programs involving—

(a) Any fissionable materials (e.g., uranium, plutonium, neptunium, thorium, americium);

(b) Other radiological source materials; or

(c) Technologies directly related to nuclear power production, including nuclear or radiological waste materials.

PART 252—SOLICITATION PROVISIONS AND CONTRACT CLAUSES

■ 3. Section 252.204–7010 is added to read as follows:

252.204–7010 Requirement for Contractor to Notify DoD if the Contractor's Activities are Subject to Reporting Under the U.S.-International Atomic Energy Agency Additional Protocol.

As prescribed in 204.470–3, use the following clause:

REQUIREMENT FOR CONTRACTOR TO NOTIFY DOD IF THE CONTRACTOR'S ACTIVITIES ARE SUBJECT TO REPORTING UNDER THE U.S.-INTERNATIONAL ATOMIC ENERGY AGENCY ADDITIONAL PROTOCOL (JAN 2009)

(a) If the Contractor is required to report any of its activities in accordance with Department of Commerce regulations (15 CFR part 781 *et seq.*) or Nuclear Regulatory Commission regulations (10 CFR part 75) in order to implement the declarations required by the U.S.-International Atomic Energy Agency Additional Protocol (U.S.-IAEA AP), the Contractor shall—

(1) Immediately provide written notification to the following DoD Program Manager:

[Contracting Officer to insert Program Manager's name, mailing address, e-mail address, telephone number, and facsimile number];

(2) Include in the notification—

(i) Where DoD contract activities or information are located relative to the activities or information to be declared to the Department of Commerce or the Nuclear Regulatory Commission; and

(ii) If or when any current or former DoD contract activities and the activities to be declared to the Department of Commerce or the Nuclear Regulatory Commission have been or will be co-located or located near enough to one another to result in disclosure of the DoD activities during an IAEA inspection or visit; and

(3) Provide a copy of the notification to the Contracting Officer.

(b) After receipt of a notification submitted in accordance with paragraph (a) of this clause, the DoD Program Manager will—

(1) Conduct a security assessment to determine if and by what means access may be granted to the IAEA; or

(2) Provide written justification to the component or agency treaty office for a national security exclusion, in accordance with DoD Instruction 2060.03, Application of the National Security Exclusion to the Agreements Between the United States of America and the International Atomic Energy Agency for the Application of Safeguards in the United States of America. DoD will notify the Contractor if a national security exclusion is applied at the Contractor's location to prohibit access by the IAEA.

(c) If the DoD Program Manager determines that a security assessment is required—

(1) DoD will, at a minimum—

(i) Notify the Contractor that DoD officials intend to conduct an assessment of vulnerabilities to IAEA inspections or visits;

(ii) Notify the Contractor of the time at which the assessment will be conducted, at least 30 days prior to the assessment;

(iii) Provide the Contractor with advance notice of the credentials of the DoD officials who will conduct the assessment; and

(iv) To the maximum extent practicable, conduct the assessment in a manner that does not impede or delay operations at the Contractor's facility; and

(2) The Contractor shall provide access to the site and shall cooperate with DoD officials in the assessment of vulnerabilities to IAEA inspections or visits.

(d) Following a security assessment of the Contractor's facility, DoD officials will notify the Contractor as to—

(1) Whether the Contractor's facility has any vulnerabilities where potentially declarable activities under the U.S.-IAEA AP are taking place;

(2) Whether additional security measures are needed; and

(3) Whether DoD will apply a national security exclusion.

(e) If DoD applies a national security exclusion, the Contractor shall not grant access to IAEA inspectors.

(f) If DoD does not apply a national security exclusion, the Contractor shall apply managed access to prevent disclosure of program activities, locations, or information in the U.S. declaration.

(g) The Contractor shall not delay submission of any reports required by the Department of Commerce or the Nuclear Regulatory Commission while awaiting a DoD response to a notification provided in accordance with this clause.

(h) The Contractor shall incorporate the substance of this clause, including this paragraph (h), in all subcontracts that are subject to the provisions of the U.S.-IAEA AP.

(End of clause)

[FR Doc. E9–671 Filed 1–14–09; 8:45 am]

BILLING CODE 5001–08–P

DEPARTMENT OF DEFENSE

Defense Acquisition Regulations System

48 CFR Part 209

RIN 0750–AG22

Defense Federal Acquisition Regulation Supplement; List of Firms Owned or Controlled by the Government of a Terrorist Country (DFARS Case 2008–D025)

AGENCY: Defense Acquisition Regulations System, Department of Defense (DoD).

ACTION: Final rule.

SUMMARY: DoD has issued a final rule amending the Defense Federal Acquisition Regulation Supplement (DFARS) to address procedures for notifying the appropriate DoD office of any information indicating that a firm or a subsidiary of a firm may be owned or controlled by the Government of a terrorist country. The notifications will facilitate maintenance of a list of such firms, as required by statute.

DATES: *Effective Date:* January 15, 2009.

FOR FURTHER INFORMATION CONTACT: Ms. Amy Williams, Defense Acquisition Regulations System, OUSD (AT&L) DPAP (DARS), IMD 3C132, 3062 Defense Pentagon, Washington, DC 20301–3062. Telephone 703–602–0328; facsimile 703–602–7887. Please cite DFARS Case 2008–D025.

SUPPLEMENTARY INFORMATION:

A. Background

10 U.S.C. 2327(d) requires DoD to develop and maintain a list of all firms, and subsidiaries of firms, that are owned or controlled by the government of a terrorist country and that, therefore, are subject to a prohibition on DoD contract awards.

To facilitate maintenance of the list required by 10 U.S.C. 2327(d), this final rule amends DFARS 209.104–1 and 209.104–70 to address DoD procedures for forwarding, to the appropriate office, any information indicating that a firm or a subsidiary of a firm may be owned or controlled by the government of a terrorist country.

This rule was not subject to Office of Management and Budget review under Executive Order 12866, dated September 30, 1993.

B. Regulatory Flexibility Act

This rule will not have a significant cost or administrative impact on contractors or offerors, or a significant effect beyond the internal operating procedures of DoD. Therefore, publication for public comment under 41 U.S.C. 418b is not required. However, DoD will consider comments from small entities concerning the affected DFARS subpart in accordance with 5 U.S.C. 610. Such comments should cite DFARS Case 2008–D025.

C. Paperwork Reduction Act

The Paperwork Reduction Act does not apply, because the rule does not impose any information collection requirements that require the approval of the Office of Management and Budget under 44 U.S.C. 3501, *et seq.*

List of Subjects in 48 CFR Part 209

Government procurement.

Michele P. Peterson,

Editor, Defense Acquisition Regulations System.

■ Therefore, 48 CFR part 209 is amended as follows:

PART 209—CONTRACTOR QUALIFICATIONS

■ 1. The authority citation for 48 CFR part 209 continues to read as follows:

Authority: 41 U.S.C. 421 and 48 CFR Chapter 1.

■ 2. Section 209.104–1 is amended by adding paragraph (g)(i)(C) to read as follows:

209.104–1 General standards.

* * * * *

(g)(i) * * *

(C) Forward any information indicating that a firm or a subsidiary of a firm may be owned or controlled by the government of a terrorist country, through agency channels, to: Deputy Director, Defense Procurement (Contract Policy and International Contracting, OUSD(AT&L)DPAP(CPIC)), 3060 Defense Pentagon, Washington, DC 20301–3060.

* * * * *

■ 3. Section 209.104–70 is amended in paragraph (a) by revising the second sentence to read as follows:

209.104–70 Solicitation provisions.

(a) * * * Any disclosure that the government of a terrorist country has a significant interest in an offeror or a subsidiary of an offeror shall be forwarded through agency channels to the address at 209.104–1(g)(i)(C).

* * * * *

[FR Doc. E9–670 Filed 1–14–09; 8:45 am]

BILLING CODE 5001–08–P

DEPARTMENT OF DEFENSE

Defense Acquisition Regulations System

48 CFR Part 209

RIN 0750–AF97

Defense Federal Acquisition Regulation Supplement; Clean Air Act and Clean Water Act Exemptions (DFARS Case 2007–D022)

AGENCY: Defense Acquisition Regulations System, Department of Defense (DoD).

ACTION: Final rule.

SUMMARY: DoD has issued a final rule amending the Defense Federal Acquisition Regulation Supplement (DFARS) to address the procedures that apply when it is necessary to award to a contractor that is otherwise excluded from Federal procurement programs due to a violation of the Clean Air Act or the Clean Water Act.

DATES: *Effective Date:* January 15, 2009.

FOR FURTHER INFORMATION CONTACT: Ms. Angie Sawyer, Defense Acquisition Regulations System, OUSD (AT&L) DPAP (DARS), IMD 3D139, 3062 Defense Pentagon, Washington, DC 20301–3062. Telephone 703–602–8384; facsimile 703–602–7887. Please cite DFARS Case 2007–D022.

SUPPLEMENTARY INFORMATION:

A. Background

The List of Parties Excluded from Federal Procurement and Nonprocurement Programs, maintained by the General Services Administration, identifies contractor facilities where no part of a Federal contract or subcontract may be performed due to a violation of the Clean Air Act (42 U.S.C. 7606) or the Clean Water Act (33 U.S.C. 1368). In accordance with Executive Order 11738, the head of a Federal agency may grant an exemption permitting award to a contractor using an otherwise ineligible facility, if the head of the agency determines that the exemption is in the paramount interest of the United States. This final rule amends the procedures specified in the DFARS for processing such an exemption, to more closely align with the requirements of Executive Order 11738.

This rule was not subject to Office of Management and Budget review under Executive Order 12866, dated September 30, 1993.

B. Regulatory Flexibility Act

This rule will not have a significant cost or administrative impact on contractors or offerors, or a significant effect beyond the internal operating procedures of DoD. Therefore, publication for public comment under 41 U.S.C. 418b is not required. However, DoD will consider comments from small entities concerning the affected DFARS subpart in accordance with 5 U.S.C. 610. Such comments should cite DFARS Case 2007–D022.

C. Paperwork Reduction Act

The Paperwork Reduction Act does not apply, because the rule does not impose any information collection requirements that require the approval of the Office of Management and Budget under 44 U.S.C. 3501, *et seq.*

List of Subjects in 48 CFR Part 209

Government procurement.

Michele P. Peterson,

Editor, Defense Acquisition Regulations System.

■ Therefore, 48 CFR part 209 is amended as follows:

PART 209—CONTRACTOR QUALIFICATIONS

■ 1. The authority citation for 48 CFR part 209 continues to read as follows:

Authority: 41 U.S.C. 421 and 48 CFR Chapter 1.

■ 2. Section 209.405 is amended by revising paragraph (b) to read as follows:

209.405 Effect of listing.

* * * * *

(b)(i) The Procurement Cause and Treatment Code ''H'' annotation in the GSA List of Parties Excluded from Federal Procurement and Nonprocurement Programs identifies contractor facilities where no part of a contract or subcontract may be performed because of a violation of the Clean Air Act (42 U.S.C. 7606) or the Clean Water Act (33 U.S.C. 1368).

(ii) Under the authority of Section 8 of Executive Order 11738, the agency head may grant an exemption permitting award to a contractor using a Code ''H'' ineligible facility if the agency head determines that such an exemption is in the paramount interest of the United States.

(A) The agency head may delegate this exemption authority to a level no lower than a general or flag officer or a member of the Senior Executive Service.

(B) The official granting the exemption—

(1) Shall promptly notify the Environmental Protection Agency suspending and debarring official of the exemption and the corresponding justification; and

(2) May grant a class exemption only after consulting with the Environmental Protection Agency suspending and debarring official.

(C) Exemptions shall be for a period not to exceed one year. The continuing necessity for each exemption shall be reviewed annually and, upon the making of a new determination, may be extended for periods not to exceed one year.

(D) All exemptions must be reported annually to the Environmental Protection Agency suspending and debarring official.

(E) See PGI 209.405 for additional procedures and information.

[FR Doc. E9–661 Filed 1–14–09; 8:45 am]

BILLING CODE 5001–08–P

DEPARTMENT OF DEFENSE

Defense Acquisition Regulations System

48 CFR Part 209

RIN 0750–AG20

Defense Federal Acquisition Regulation Supplement; Responsible Prospective Contractors (DFARS Case 2008–D022)

AGENCY: Defense Acquisition Regulations System, Department of Defense (DoD).

ACTION: Final rule.

SUMMARY: DoD has issued a final rule amending the Defense Federal Acquisition Regulation Supplement (DFARS) to address use of the Past Performance Information Retrieval System (PPIRS) in determining contractor responsibility. PPIRS is a Web-based application that stores information regarding contractor performance on Government contracts.

DATES: *Effective Date:* January 15, 2009.

FOR FURTHER INFORMATION CONTACT: Mr. Michael Benavides, Defense Acquisition Regulations System, OUSD(AT&L)DPAP(DARS), IMD 3D139, 3062 Defense Pentagon, Washington, DC 20301–3062. Telephone 703–602–1302; facsimile 703–602–7887. Please cite DFARS Case 2008–D022.

SUPPLEMENTARY INFORMATION:

A. Background

This final rule adds text at DFARS 209.105–1 to address use of PPIRS (available at *http://www.ppirs.gov*) in meeting requirements for determining contractor responsibility. The rule emphasizes that use of PPIRS information regarding contract

termination for cause or default is just one consideration in making a determination of contractor responsibility.

This rule was not subject to Office of Management and Budget review under Executive Order 12866, dated September 30, 1993.

B. Regulatory Flexibility Act

This rule will not have a significant cost or administrative impact on contractors or offerors, or a significant effect beyond the internal operating procedures of DoD. Therefore, publication for public comment under 41 U.S.C. 418b is not required. However, DoD will consider comments from small entities concerning the affected DFARS subpart in accordance with 5 U.S.C. 610. Such comments should cite DFARS Case 2008–D022.

C. Paperwork Reduction Act

The Paperwork Reduction Act does not apply, because the rule does not impose any information collection requirements that require the approval of the Office of Management and Budget under 44 U.S.C. 3501, *et seq.*

List of Subjects in 48 CFR Part 209

Government procurement.

Michele P. Peterson,

Editor, Defense Acquisition Regulations System.

■ Therefore, 48 CFR part 209 is amended as follows:

PART 209—CONTRACTOR QUALIFICATIONS

■ 1. The authority citation for 48 CFR part 209 continues to read as follows:

Authority: 41 U.S.C. 421 and 48 CFR Chapter 1.

■ 2. Section 209.105–1 is revised to read as follows:

209.105–1 Obtaining information.

(1) For guidance on using the Excluded Parties List System, see PGI 209.105–1.

(2) A satisfactory performance record is a factor in determining contractor responsibility (*see* FAR 9.104–1(c)). One source of information relating to contractor performance is the Past Performance Information Retrieval System (PPIRS), available at *http://www.ppirs.gov.* Information relating to contract terminations for cause and for default is also available through PPIRS (*see* PGI 212.403(c) and PGI 249.470). This termination information is just one consideration in determining contractor responsibility.

[FR Doc. E9–668 Filed 1–14–09; 8:45 am]

BILLING CODE 5001–08–P

DEPARTMENT OF DEFENSE

Defense Acquisition Regulations System

48 CFR Part 212

RIN 0750–AG17

Defense Federal Acquisition Regulation Supplement; Pilot Program for Transition to Follow-On Contracting After Use of Other Transaction Authority (DFARS Case 2008–D030)

AGENCY: Defense Acquisition Regulations System, Department of Defense (DoD).

ACTION: Interim rule with request for comments.

SUMMARY: DoD has issued an interim rule amending the Defense Federal Acquisition Regulation Supplement (DFARS) to implement Section 824 of the National Defense Authorization Act for Fiscal Year 2009. Section 824 amended the DoD pilot program for transition to follow-on contracting after use of other transaction authority, to establish a new program expiration date and to include items developed under research projects within the scope of the program.

DATES: *Effective date:* January 15, 2009.

Comment date: Comments on the interim rule should be submitted in writing to the address shown below on or before March 16, 2009, to be considered in the formation of the final rule.

ADDRESSES: You may submit comments, identified by DFARS Case 2008–D030, using any of the following methods:

○ *Federal eRulemaking Portal: http://www.regulations.gov.* Follow the instructions for submitting comments.

○ *E-mail: dfars@osd.mil.* Include DFARS Case 2008–D030 in the subject line of the message.

○ *Fax:* 703–602–7887.

○ *Mail:* Defense Acquisition Regulations System, Attn: Ms. Angie Sawyer, OUSD(AT&L)DPAP(DARS), IMD 3D139, 3062 Defense Pentagon, Washington, DC 20301–3062.

○ *Hand Delivery/Courier:* Defense Acquisition Regulations System, Crystal Square 4, Suite 200A, 241 18th Street, Arlington, VA 22202–3402.

Comments received generally will be posted without change to *http://www.regulations.gov,* including any personal information provided.

FOR FURTHER INFORMATION CONTACT: Ms. Angie Sawyer, 703–602–8384.

SUPPLEMENTARY INFORMATION:

A. Background

This interim rule amends the DoD pilot program addressed in DFARS Subpart 212.70, Pilot Program for Transition to Follow-On Contracting After Use of Other Transaction Authority. The pilot program implements Section 845(e) of the National Defense Authorization Act for Fiscal Year 1994 (10 U.S.C. 2371 note), and provides that certain items that do not otherwise meet the definition of ''commercial item'' may be treated as commercial items in the award of contracts and subcontracts that follow an other transaction agreement. Section 824 of the National Defense Authorization Act for Fiscal Year 2009 (Pub. L. 110–417) amended the authority for the pilot program to establish a new program expiration date of September 30, 2010, and to add items developed under research projects in accordance with 10 U.S.C. 2371 to the types of items to which the program applies.

This rule was not subject to Office of Management and Budget review under Executive Order 12866, dated September 30, 1993.

B. Regulatory Flexibility Act

DoD does not expect this rule to have a significant economic impact on a substantial number of small entities within the meaning of the Regulatory Flexibility Act, 5 U.S.C. 601, *et seq.* Although the rule is expected to ease the transition of nontraditional defense contractors from the use of other transaction agreements to standard contracts, the economic impact is not expected to be substantial. Therefore, DoD has not performed an initial regulatory flexibility analysis. DoD invites comments from small businesses and other interested parties. DoD also will consider comments from small entities concerning the affected DFARS subpart in accordance with 5 U.S.C. 610. Such comments should be submitted separately and should cite DFARS Case 2008–D030.

C. Paperwork Reduction Act

The Paperwork Reduction Act does not apply, because the rule does not impose any information collection requirements that require the approval of the Office of Management and Budget under 44 U.S.C. 3501, *et seq.*

D. Determination to Issue an Interim Rule

A determination has been made under the authority of the Secretary of Defense that urgent and compelling reasons exist to publish an interim rule prior to affording the public an opportunity to comment. This interim rule implements Section 824 of the National Defense Authorization Act for Fiscal Year 2009 (Pub. L. 110–417). Section 824 amended the DoD pilot program that permits the use of streamlined procedures in the award of contracts and subcontracts that follow other transaction agreements, to include items developed under research projects within the scope of the program. The pilot program is intended to ease the transition of nontraditional defense contractors from the use of other transaction agreements to standard contracts. Comments received in response to this interim rule will be considered in the formation of the final rule.

List of Subjects in 48 CFR Part 212

Government procurement.

Michele P. Peterson,

Editor, Defense Acquisition Regulations System.

■ Therefore, 48 CFR part 212 is amended as follows:

PART 212—ACQUISITION OF COMMERCIAL ITEMS

■ 1. The authority citation for 48 CFR part 212 continues to read as follows:

Authority: 41 U.S.C. 421 and 48 CFR Chapter 1.

■ 2. Section 212.7002–1 is amended by revising paragraphs (a)(2) and (4) to read as follows:

212.7002–1 Contracts under the program.

(a) * * *

(2) Is a follow-on contract for the production of an item or process begun as a prototype project under an other transaction agreement or as a research project carried out in accordance with 10 U.S.C. 2371;

* * * * *

(4) Is awarded on or before September 30, 2010; and

* * * * *

■ 3. Section 212.7002–2 is amended by revising paragraphs (a)(1) and (3) to read as follows:

212.7002–2 Subcontracts under the program.

(a) * * *

(1) Is for the production of an item or process begun as a prototype project under an other transaction agreement or as a research project carried out in accordance with 10 U.S.C. 2371;

* * * * *

(3) Is awarded on or before September 30, 2010;

* * * * *

[FR Doc. E9–667 Filed 1–14–09; 8:45 am]

BILLING CODE 5001–08–P

DEPARTMENT OF DEFENSE

Defense Acquisition Regulations System

48 CFR Part 216

RIN 0750–AG14

Defense Federal Acquisition Regulation Supplement; Delegation of Authority for Single Award Task or Delivery Order Contracts (DFARS Case 2008–D017)

AGENCY: Defense Acquisition Regulations System, Department of Defense (DoD).

ACTION: Final rule.

SUMMARY: DoD has issued a final rule amending the Defense Federal Acquisition Regulation Supplement (DFARS) to address Federal Acquisition Regulation provisions that permit the award of a single source task or delivery order contract exceeding $100 million, if the head of the agency determines it is necessary in the public interest. The DFARS rule specifies that the authority to make such a determination may not be delegated below the level of the senior procurement executive.

DATES: *Effective Date:* January 15, 2009.

FOR FURTHER INFORMATION CONTACT: Mr. Michael Benavides, Defense Acquisition Regulations System, OUSD (AT&L) DPAP (DARS), IMD 3D139, 3062 Defense Pentagon, Washington, DC 20301–3062. Telephone 703–602–1302; facsimile 703–602–7887. Please cite DFARS Case 2008–D017.

SUPPLEMENTARY INFORMATION:

A. Background

An interim rule amending the Federal Acquisition Regulation (FAR) was published at 73 FR 54008 on September 17, 2008, to implement Section 843 of the National Defense Authorization Act for Fiscal Year 2008 (Pub. L. 110–181). Section 843 prohibits the award of a task or delivery order contract in an amount exceeding $100 million to a single source unless the head of the agency determines that: the task or delivery orders expected under the contract are so integrally related that only a single source can reasonably perform the work; the contract provides only for firm-fixed-price task or delivery orders; only one source is qualified and capable of performing the work at a reasonable price to the Government; or it is necessary in the public interest to award the contract to a single source due to exceptional circumstances. With regard to the delegation of authority provision at FAR 1.108(b), this DFARS rule specifies that the head of the agency may not delegate the authority to make a single source public interest determination below the level of the senior procurement executive. The rule also requires that a copy of any determination authorizing the award of a single source task or delivery order contract be submitted to the Deputy Director, Defense Procurement (Contract Policy and International Contracting).

This rule was not subject to Office of Management and Budget review under Executive Order 12866, dated September 30, 1993.

B. Regulatory Flexibility Act

This rule will not have a significant cost or administrative impact on contractors or offerors, or a significant effect beyond the internal operating procedures of DoD. Therefore, publication for public comment under 41 U.S.C. 418b is not required. However, DoD will consider comments from small entities concerning the affected DFARS subpart in accordance with 5 U.S.C. 610. Such comments should cite DFARS Case 2008–D017.

C. Paperwork Reduction Act

The Paperwork Reduction Act does not apply, because the rule does not impose any information collection requirements that require the approval of the Office of Management and Budget under 44 U.S.C. 3501, *et seq.*

List of Subjects in 48 CFR Part 216

Government procurement.

Michele P. Peterson,

Editor, Defense Acquisition Regulations System.

■ Therefore, 48 CFR part 216 is amended as follows:

PART 216—TYPES OF CONTRACTS

■ 1. The authority citation for 48 CFR part 216 continues to read as follows:

Authority: 41 U.S.C. 421 and 48 CFR Chapter 1.

■ 2. Section 216.504 is added to read as follows:

216.504 Indefinite-quantity contracts.

(c)(1)(ii)(D) *Limitation on single award contracts.*

(1) The authority to make the determination authorized in FAR 16.504(c)(1)(ii)(D)*(1)(iv)* shall not be delegated below the level of the senior procurement executive.

(3) A copy of any determination made in accordance with FAR 16.504(c)(1)(ii)(D) shall be submitted to: Deputy Director, Defense Procurement (Contract Policy and International Contracting), OUSD (AT&L) DPAP (CPIC), 3060 Defense Pentagon, Washington, DC 20301–3060.

[FR Doc. E9–673 Filed 1–14–09; 8:45 am]

BILLING CODE 5001–08–P

DEPARTMENT OF DEFENSE

Defense Acquisition Regulations System

48 CFR Parts 225, 236, and 252

RIN 0750–AG16

Defense Federal Acquisition Regulation Supplement; Steel for Military Construction Projects (DFARS Case 2008–D038)

AGENCY: Defense Acquisition Regulations System, Department of Defense (DoD).

ACTION: Interim rule with request for comments.

SUMMARY: DoD has issued an interim rule amending the Defense Federal Acquisition Regulation Supplement (DFARS) to implement Section 108 of the Military Construction and Veterans Affairs Appropriations Act, 2009. Section 108 requires that American steel producers, fabricators, and manufacturers be given the opportunity to compete for contracts and subcontracts for the acquisition of steel for use in military construction projects or activities.

DATES: *Effective date:* January 15, 2009.

Comment date: Comments on the interim rule should be submitted in writing to the address shown below on or before March 16, 2009, to be considered in the formation of the final rule.

ADDRESSES: You may submit comments, identified by DFARS Case 2008–D038, using any of the following methods:

○ *Federal eRulemaking Portal: http://www.regulations.gov.* Follow the instructions for submitting comments.

○ *E-mail: dfars@osd.mil.* Include DFARS Case 2008–D038 in the subject line of the message.

○ *Fax:* 703–602–7887.

○ *Mail:* Defense Acquisition Regulations System, Attn: Ms. Amy Williams, OUSD (AT&L) DPAP (DARS), IMD 3D139, 3062 Defense Pentagon, Washington, DC 20301–3062.

○ *Hand Delivery/Courier:* Defense Acquisition Regulations System, Crystal Square 4, Suite 200A, 241 18th Street, Arlington, VA 22202–3402.

Comments received generally will be posted without change to *http://www.regulations.gov,* including any personal information provided.

FOR FURTHER INFORMATION CONTACT: Ms. Amy Williams, 703–602–0328.

SUPPLEMENTARY INFORMATION:

A. Background

Section 108 of the Military Construction and Veterans Affairs Appropriations Act, 2009 (Pub. L. 110–329, Division E) prohibits the use of funds appropriated in Title I of that Act for the procurement of steel for any military construction project or activity for which American steel producers, fabricators, or manufacturers have been denied the opportunity to compete. This interim rule adds DFARS policy and a contract clause to implement the statutory prohibition.

This rule was not subject to Office of Management and Budget review under Executive Order 12866, dated September 30, 1993.

B. Regulatory Flexibility Act

DoD has prepared an initial regulatory flexibility analysis consistent with 5 U.S.C. 603. A copy of the analysis may be obtained from the point of contact specified herein. The analysis is summarized as follows:

This interim rule implements Section 108 of the Military Construction and Veterans Affairs Appropriations Act, 2009. The objective of the rule is to ensure that American steel producers, fabricators, and manufacturers are given the opportunity to compete for contracts and subcontracts for the acquisition of steel for use in military construction projects and activities. Existing Buy American Act and Balance of Payments Program requirements, implemented in FAR Subpart 25.2 and DFARS Subpart 225.75 respectively, already provide for DoD acquisition of domestic construction materials, including steel. However, this DFARS rule will prohibit use of the exceptions to Buy American Act/Balance of Program requirements otherwise permitted by FAR/DFARS, with regard to the acquisition of steel, unless American steel producers, fabricators, and manufacturers are first provided the opportunity to compete. The rule is expected to benefit American steel producers, fabricators, and manufacturers by ensuring they are provided an opportunity to compete for contracts and subcontracts for the acquisition of steel for use in military construction projects and activities.

DoD invites comments from small businesses and other interested parties. DoD also will consider comments from small entities concerning the affected DFARS subparts in accordance with 5 U.S.C. 610. Such comments should be submitted separately and should cite DFARS Case 2008–D038.

C. Paperwork Reduction Act

The Paperwork Reduction Act does not apply, because the rule does not impose any information collection requirements that require the approval of the Office of Management and Budget under 44 U.S.C. 3501, *et seq.*

D. Determination To Issue an Interim Rule

A determination has been made under the authority of the Secretary of Defense that urgent and compelling reasons exist to publish an interim rule prior to affording the public an opportunity to comment. This interim rule implements Section 108 of the Military Construction and Veterans Affairs Appropriations Act, 2009 (Pub. L. 110–329, Division E). Section 108 establishes a prohibition on the expenditure of funds for the procurement of steel for any military construction project or activity, unless American steel producers, fabricators, and manufacturers have been provided an opportunity to compete. Comments received in response to this interim rule will be considered in the formation of the final rule.

List of Subjects in 48 CFR Parts 225, 236, and 252

Government procurement.

Michele P. Peterson,

Editor, Defense Acquisition Regulations System.

■ Therefore, 48 CFR parts 225, 236, and 252 are amended as follows:

■ 1. The authority citation for 48 CFR parts 225, 236, and 252 continues to read as follows:

Authority: 41 U.S.C. 421 and 48 CFR chapter 1.

PART 225—FOREIGN ACQUISITION

■ 2. Section 225.7014 is revised to read as follows:

225.7014 Restrictions on military construction.

(a) For restriction on award of military construction contracts to be performed in the United States outlying areas in the Pacific and on Kwajalein Atoll, or in

countries bordering the Arabian Gulf, *see* 236.273(a).

(b) For restriction on acquisition of steel for use in military construction projects, *see* 236.274.

PART 236—CONSTRUCTION AND ARCHITECT-ENGINEER CONTRACTS

■ 3. Section 236.274 is added to read as follows:

236.274 Restriction on acquisition of steel for use in military construction projects.

In accordance with section 108 of the Military Construction and Veterans Affairs Appropriations Act, 2009 (Pub. L. 110–329, Division E), do not acquire, or allow a contractor to acquire, steel for any construction project or activity for which American steel producers, fabricators, or manufacturers have been denied the opportunity to compete for such acquisition of steel.

■ 4. Section 236.570 is amended as follows:

■ a. By redesignating paragraph (d) as paragraph (e); and

■ b. By adding a new paragraph (d) to read as follows:

236.570 Additional provisions and clauses.

* * * * *

(d) Use the clause at 252.236–7013, Requirement for Competition Opportunity for American Steel Producers, Fabricators, and Manufacturers, in solicitations and contracts that—

(1) Use funds appropriated by Title I of the Military Construction and Veterans Affairs Appropriations Act, 2009 (Pub. L. 110–329, Division E); and

(2) May require the acquisition of steel as a construction material.

* * * * *

PART 252—SOLICITATION PROVISIONS AND CONTRACT CLAUSES

■ 5. Section 252.236–7013 is added to read as follows:

252.236–7013 Requirement for competition opportunity for american steel producers, fabricators, and manufacturers.

As prescribed in 236.570(d), use the following clause:

REQUIREMENT FOR COMPETITION OPPORTUNITY FOR AMERICAN STEEL PRODUCERS, FABRICATORS, AND MANUFACTURERS (JAN 2009)

(a) *Definition. Construction material,* as used in this clause, means an article, material, or supply brought to the construction site by the Contractor or a subcontractor for incorporation into the building or work.

(b) The Contractor shall provide American steel producers, fabricators, and manufacturers the opportunity to compete when acquiring steel as a construction material (e.g., steel beams, rods, cables, plates).

(c) The Contractor shall insert the substance of this clause, including this paragraph (c), in any subcontract that involves the acquisition of steel as a construction material.

(End of clause)

■ 6. Section 252.244–7000 is amended as follows:

■ a. By revising the clause date;

■ b. By redesignating paragraphs (b) through (d) as paragraphs (c) through (e) respectively; and

■ c. By adding a new paragraph (b) to read as follows:

252.244–7000 Subcontracts for commercial items and commercial components (DOD contracts).

* * * * *

SUBCONTRACTS FOR COMMERCIAL ITEMS AND COMMERCIAL COMPONENTS (DOD CONTRACTS) (JAN 2009)

* * * * *

(b) 252.236–7013 Requirement for Competition Opportunity for American Steel Producers, Fabricators, and Manufacturers (Pub. L. 110–329, Division E, Section 108).

* * * * *

[FR Doc. E9–677 Filed 1–14–09; 8:45 am]

BILLING CODE 5001–08–P

DEPARTMENT OF DEFENSE

Defense Acquisition Regulations System

48 CFR Parts 225 and 252

RIN 0750–AF82

Defense Federal Acquisition Regulation Supplement; DoD Law of War Program (DFARS Case 2006–D035)

AGENCY: Defense Acquisition Regulations System, Department of Defense (DoD).

ACTION: Final rule.

SUMMARY: DoD has issued a final rule amending the Defense Federal Acquisition Regulation Supplement (DFARS) to address requirements for DoD contractors to institute effective programs to prevent violations of the law of war by contractor personnel authorized to accompany U.S. Armed Forces deployed outside the United States.

DATES: *Effective Date:* January 15, 2009.

FOR FURTHER INFORMATION CONTACT: Ms. Angie Sawyer, Defense Acquisition Regulations System, OUSD (AT&L) DPAP (DARS), IMD 3D139, 3062 Defense Pentagon, Washington, DC 20301–3062. Telephone 703–602–8384; facsimile 703–602–7887. Please cite DFARS Case 2006–D035.

SUPPLEMENTARY INFORMATION:

A. Background

This final rule amends the clause at DFARS 252.225–7040, Contractor Personnel Authorized To Accompany U.S. Armed Forces Deployed Outside the United States, to address requirements for DoD contractors to institute effective programs to prevent law of war violations by contractor personnel. The rule requires that deploying contractor personnel receive appropriate law of war training, and that contractor personnel report any violations of the law of war to the appropriate authorities. The DFARS rule is consistent with the policy in DoD Directive 2311.01E, DoD Law of War Program, dated May 9, 2006.

DoD published a proposed rule at 73 FR 1853 on January 10, 2008. Four sources submitted comments on the proposed rule. A discussion of the comments is provided below.

1. *Comment:* The limitation on the use of Web-based basic law of war training is overly restrictive (i.e., must be approved by the contracting officer). The training should be available at any time for completion via a Web-based source to prevent delays in meeting training requirements.

DoD Response: Deployed contractor personnel must process through a deployment center, in accordance with paragraph (f) of the clause at DFARS 252.225–7040. DoD has provided training materials to all the pre-deployment training centers as the primary method of meeting basic training requirements. Web-based training is intended to substitute for live pre-deployment training only when determined to be appropriate by the contracting officer.

2. *Comment:* To ensure the availability of advanced training when needed, advanced training should be handled as an in-processing matter and should be provided at an in-theater/in-country central processing center for newly arriving contractor personnel.

DoD Response: Advanced training could be provided at in-processing, as long as the Judge Advocates or other Government counsel are involved. The DFARS rule has been amended to provide additional flexibility in meeting advanced law of war training requirements. However, government

counsel must review advanced training content in all cases to ensure that it is commensurate with the duties and responsibilities of the personnel to be trained.

3. *Comment:* DoD should develop standard training content to ensure consistency and accuracy.

DoD Response: DoD has developed standard basic training for dissemination, as described in the response to comment 1 above. However, for advanced training, different missions require different emphasis, making complete standardization infeasible.

4. *Comment:* This rule will have cost impacts associated with implementation, especially if the contractor loses time while waiting for advanced law of war training. Contractors should not be held accountable for compliance with law of war training requirements until such time as DoD has its training materials deployed.

DoD Response: DoD has already deployed the basic training module to the military training centers, and online training is also available for use when deemed appropriate by the contracting officer. The DFARS rule has been amended to permit flexibility in meeting advanced law of war training requirements, provided the training content is coordinated with government counsel.

5. *Comment:* The Rules for the Use of Force (RUF) and the Uniform Code of Military Justice (UCMJ) should be addressed as part of law of war training.

DoD Response: RUF training is already required by the clause at DFARS 252.225–7040. The basic and advanced training on the law of war will complement this training by addressing law of war issues pertaining to the use of force. RUF training should be provided by the contractor in accordance with the cognizant Commander's RUF guidance. UCMJ criminal liability for law of war violations is included in the training program. However, the UCMJ applies to contractor employees, along with the Military Extraterritorial Jurisdiction Act, in a broader context than law of war violations. The contractor is responsible for ensuring that its employees are properly trained on all aspects of their criminal and civil liability.

6. *Comment:* The word ''prevent'' should be changed to the phrase ''minimize the possibility of,'' in the context of requiring contractors to implement a program to prevent law of war violations.

DoD Response: The word ''prevent'' is consistent with both DoD Directive 2311.01E and treaty obligations under international law.

7. *Comment:* What metrics will be used to determine if a contractor has an effective training program to prevent law of war violations?

DoD Response: The goal is to prevent law of war violations. Contractors should adopt training, control measures, and reporting procedures to that end. Basic training is Government resourced. Advanced training will be provided as specified in the contract.

8. *Comment:* The rule will impose a mandatory requirement on contractor personnel to report violations directly to Commanders, bypassing other complaint channels. Such reporting by individuals should be optional.

DoD Response: Contractor reporting of law of war violations is required by DoD Directive 2311.01E. The clause at DFARS 252.225–7040 has been amended to permit contractor personnel to report violations to authorities other than the Combatant Commander.

9. *Comment:* The requirement for contractor personnel to report law of war violations will amount to unenforceable ''good faith'' reporting. Contractors instead should be required to submit a daily or weekly log of activity on any violations as a way to enforce reporting.

DoD Response: DoD does not agree with the recommended change. Creating a daily or weekly log would cause an unnecessary recordkeeping requirement for contractors.

10. *Comment:* Requiring reporting by individuals requires contractor personnel to make legal judgments about the conduct of other contractor personnel and about the credibility of information that they may not be equipped to make.

DoD Response: DoD does not agree that this requirement calls for contractor personnel to make legal judgments. The basic law of war training is designed to educate contractor personnel on the law of war and on how to recognize suspected law of war violations. The legal analysis and credibility determinations will be made by the Commander, with the advice of Counsel, when deciding to report the incident to higher headquarters. For purposes of the DFARS clause, contractor personnel must report all suspected law of war violations, not only those violations that may have been committed by contractor personnel.

11. *Comment:* DoD should stablish an Office of Primary Responsibility to assist contractors with law of war issues.

DoD Response: DoD does not believe that establishing an Office of Primary Responsibility is necessary. Contractors should follow normal procedures by requesting any needed clarification from the contracting officer, who in turn can request assistance from a Judge Advocate or other Government counsel.

12. *Comment:* Paragraph (d) of the clause at 252.225–7040 should include a cross-reference to paragraph (a) of the clause, which defines the law of war.

DoD Response: The cross-reference is unnecessary. Paragraph (a) of the clause makes it clear that the definitions in that paragraph apply wherever the defined terms are used throughout the clause.

13. *Comment:* ''Third country national laws'' should be removed from 252.225–7040(d)(1)(i).

DoD Response: This change is outside the scope of this rule, which is focused on implementing law of war training in accordance with DoD Directive 2311.01E.

14. *Comment:* The Geneva and Hague Conventions should be specifically addressed in 252.225–7040(d)(1)(ii), as they are integral to the law of war.

DoD Response: This level of specificity should be and is addressed in basic law of war training and is not necessary for inclusion in the DFARS clause.

15. *Comment:* The rule should include a requirement for all contractors to be notified of the Geneva/Hague status and designation noted on the letters of agreement.

DoD Response: This requirement should be handled as part of in-processing procedures and is not necessary for inclusion in the DFARS.

16. *Comment:* At 252.225–7040(e)(1)(vii)(A), the phrase ''all deploying personnel'' should be replaced with ''all contractors accompanying armed forces.''

DoD Response: For consistency with DoD Directive 2311.01E and the rest of the clause, the phrase has been changed to ''Contractor personnel authorized to accompany U.S. Armed Forces deployed outside the United States.''

17. *Comment:* At 252.225–7040(h)(3), the phrase ''installation to which they are assigned'' should be changed to ''installation where they reside,'' because contractors are not assigned to installations.

DoD Response: The phrase ''installation to which they are assigned'' has been excluded from the final rule.

18. *Comment:* ''Applicable United States, host country and third country national laws'' should be added to 252.225–7040(h)(3)(i).

DoD Response: This recommended change is outside the scope of this rule, which is focused on implementing law of war training in accordance with DoD Directive 2311.01E.

19. *Comment:* At 252.225–7040(h)(3)(ii), the phrase ''military operations other than war'' should be changed to ''declared contingency operations'' to reflect latest terminology.

DoD Response: The phrase has been revised to read ''during any other military operations.''

This rule was not subject to Office of Management and Budget review under Executive Order 12866, dated September 30, 1993.

B. Regulatory Flexibility Act

DoD certifies that this final rule will not have a significant economic impact on a substantial number of small entities within the meaning of the Regulatory Flexibility Act, 5 U.S.C. 601, *et seq.*, because the requirement to institute an effective program to prevent law of war violations need not be a costly endeavor, and it can be tailored to the size of the company. Basic law of war training will be provided by the Government. Advanced law of war training requirements will be specified in the solicitation and contract to permit contractors to receive appropriate reimbursement of any training costs.

C. Paperwork Reduction Act

The Paperwork Reduction Act does not apply, because the rule does not impose any information collection requirements that require the approval of the Office of Management and Budget under 44 U.S.C. 3501, *et seq.*

List of Subjects in 48 CFR Parts 225 and 252

Government procurement.

Michele P. Peterson,

Editor, Defense Acquisition Regulations System.

■ Therefore, 48 CFR parts 225 and 252 are amended as follows:

■ 1. The authority citation for 48 CFR parts 225 and 252 continues to read as follows:

Authority: 41 U.S.C. 421 and 48 CFR Chapter 1.

PART 225—FOREIGN ACQUISITION

225.7402–4 [Redesignated as 225.7402–5]

■ 2. Section 225.7402–4 is redesignated as 225.7402–5.

■ 3. A new section 225.7402–4 is added to read as follows:

225.7402–4 Law of war training.

(a) *Basic training.* Basic law of war training is required for all contractor personnel authorized to accompany U.S. Armed Forces deployed outside the United States. The basic training normally will be provided through a military-run training center. The contracting officer may authorize the use of an alternate basic training source, provided the servicing DoD legal advisor concurs with the course content. An example of an alternate source of basic training is the Web-based training provided by the Defense Acquisition University at *https://acc.dau.mil/CommunityBrowser.aspx?id=18014&lang=en-US.*

(b) *Advanced law of war training.* (1) The types of personnel that must obtain advanced law of war training include the following:

(i) Private security contractors.

(ii) Security guards in or near areas of military operations.

(iii) Interrogators, linguists, interpreters, guards, report writers, information technology technicians, or others who will come into contact with enemy prisoners of war, civilian internees, retained persons, other detainees, terrorists, or criminals who are captured, transferred, confined, or detained during or in the aftermath of hostilities.

(iv) Other personnel when deemed necessary by the contracting officer.

(2) If contractor personnel will be required to obtain advanced law of war training, the solicitation and contract shall specify—

(i) The types of personnel subject to advanced law of war training requirements;

(ii) Whether the training will be provided by the Government or the contractor;

(iii) If the training will be provided by the Government, the source of the training; and

(iv) If the training will be provided by the contractor, a requirement for coordination of the content with the servicing DoD legal advisor to ensure that training content is commensurate with the duties and responsibilities of the personnel to be trained.

PART 252—SOLICITATION PROVISIONS AND CONTRACT CLAUSES

■ 4. Section 252.225–7040 is amended as follows:

■ a. By revising the introductory text and the clause date;

■ b. In paragraph (a), by adding, in alphabetical order, a definition of ''Law of war'';

■ c. By revising paragraph (d) and paragraph (e)(1) introductory text; and

■ d. By adding paragraphs (e)(1)(vii) and (h)(3) to read as follows:

252.225–7040 Contractor Personnel Authorized to Accompany U.S. Armed Forces Deployed Outside the United States.

As prescribed in 225.7402–5(a), use the following clause:

CONTRACTOR PERSONNEL AUTHORIZED TO ACCOMPANY U.S. ARMED FORCES DEPLOYED OUTSIDE THE UNITED STATES (JAN 2009)

(a) * * *

Law of war means that part of international law that regulates the conduct of armed hostilities. The law of war encompasses all international law for the conduct of hostilities binding on the United States or its individual citizens, including treaties and international agreements to which the United States is a party, and applicable customary international law.

* * * * *

(d) *Compliance with laws and regulations.* (1) The Contractor shall comply with, and shall ensure that its personnel authorized to accompany U.S. Armed Forces deployed outside the United States as specified in paragraph (b)(1) of this clause are familiar with and comply with, all applicable—

(i) United States, host country, and third country national laws;

(ii) Provisions of the law of war, as well as any other applicable treaties and international agreements;

(iii) United States regulations, directives, instructions, policies, and procedures; and

(iv) Orders, directives, and instructions issued by the Combatant Commander, including those relating to force protection, security, health, safety, or relations and interaction with local nationals.

(2) The Contractor shall institute and implement an effective program to prevent violations of the law of war by its employees and subcontractors, including law of war training in accordance with paragraph (e)(1)(vii) of this clause.

(e) *Pre-deployment requirements.* (1) The Contractor shall ensure that the following requirements are met prior to deploying personnel authorized to accompany U.S. Armed Forces. Specific requirements for each category may be specified in the statement of work or elsewhere in the contract.

* * * * *

(vii) Personnel have received law of war training as follows:

(A) Basic training is required for all Contractor personnel authorized to accompany U.S. Armed Forces deployed outside the United States. The basic training will be provided through—

(1) A military-run training center; or

(2) A Web-based source, if specified in the contract or approved by the Contracting Officer.

(B) Advanced training, commensurate with their duties and responsibilities, may be required for some Contractor personnel as specified in the contract.

* * * * *

(h) * * *

(3) Contractor personnel shall report to the Combatant Commander or a designee, or through other channels such as the military police, a judge advocate, or an inspector general, any suspected or alleged conduct for which there is credible information that such conduct—

(i) Constitutes violation of the law of war; or

(ii) Occurred during any other military operations and would constitute a violation of the law of war if it occurred during an armed conflict.

* * * * *

[FR Doc. E9–680 Filed 1–14–09; 8:45 am]

BILLING CODE 5001–08–P

DEPARTMENT OF DEFENSE

Defense Acquisition Regulations System

48 CFR Part 237

RIN 0750–AF64

Defense Federal Acquisition Regulation Supplement; Security-Guard Functions (DFARS Case 2006–D050)

AGENCY: Defense Acquisition Regulations System, Department of Defense (DoD).

ACTION: Final rule.

SUMMARY: DoD has adopted as final, without change, an interim rule amending the Defense Federal Acquisition Regulation Supplement (DFARS) to implement Section 343 of the National Defense Authorization Act for Fiscal Year 2008. Section 343 extended, through September 30, 2012, the period during which contractor performance of security-guard functions at military installations or facilities is authorized to fulfill additional requirements resulting from the terrorist attacks on the United States on September 11, 2001.

DATES: *Effective Date:* January 15, 2009.

FOR FURTHER INFORMATION CONTACT: Mr. Michael Benavides, Defense Acquisition Regulations System, OUSD (AT&L) DPAP (DARS), IMD 3D139, 3062 Defense Pentagon, Washington, DC 20301–3062. Telephone 703–602–1302; facsimile 703–602–7887. Please cite DFARS Case 2006–D050.

SUPPLEMENTARY INFORMATION:

A. Background

DoD published an interim rule at 73 FR 53156 on September 15, 2008, to implement Section 343 of the National Defense Authorization Act for Fiscal Year 2008 (Pub. L. 110–181). Section 343 extended, through September 30, 2012, the period during which contractor performance of security-guard functions at military installations or facilities is authorized to fulfill additional requirements resulting from the terrorist attacks on the United States on September 11, 2001, provided the total number of personnel employed to perform such functions does not exceed specified limits.

DoD received no comments on the interim rule. Therefore, DoD has adopted the interim rule as a final rule without change.

This rule was not subject to Office of Management and Budget review under Executive Order 12866, dated September 30, 1993.

B. Regulatory Flexibility Act

DoD certifies that this final rule will not have a significant economic impact on a substantial number of small entities within the meaning of the Regulatory Flexibility Act, 5 U.S.C. 601, *et seq.* Although the rule may provide opportunities for small business concerns to receive contracts for the performance of security-guard functions at military installations or facilities, the economic impact is not expected to be substantial.

C. Paperwork Reduction Act

The Paperwork Reduction Act does not apply, because the rule does not impose any information collection requirements that require the approval of the Office of Management and Budget under 44 U.S.C. 3501, *et seq.*

List of Subjects in 48 CFR Part 237

Government procurement.

Michele P. Peterson,

Editor, Defense Acquisition Regulations System.

Interim Rule Adopted as Final Without Change

■ Accordingly, the interim rule amending 48 CFR part 237, which was published at 73 FR 53156 on September 15, 2008, is adopted as a final rule without change.

[FR Doc. E9–665 Filed 1–14–09; 8:45 am]

BILLING CODE 5001–08–P

DEPARTMENT OF DEFENSE

Defense Acquisition Regulations System

48 CFR Part 252

RIN 0750–AG18

Defense Federal Acquisition Regulation Supplement; Removal of North Korea From the List of Terrorist Countries (DFARS Case 2008–D036)

AGENCY: Defense Acquisition Regulations System, Department of Defense (DoD).

ACTION: Final rule.

SUMMARY: DoD has issued a final rule amending the Defense Federal Acquisition Regulation Supplement (DFARS) to remove North Korea from the list of terrorist countries subject to a prohibition on DoD contract awards. This change is a result of the State Department's removal of North Korea from the list of countries designated as state sponsors of terrorism.

DATES: *Effective Date:* January 15, 2009.

FOR FURTHER INFORMATION CONTACT: Ms. Amy Williams, Defense Acquisition Regulations System, OUSD (AT&L) DPAP (DARS), IMD 3C132, 3062 Defense Pentagon, Washington, DC 20301–3062. Telephone 703–602–0328; facsimile 703–602–7887. Please cite DFARS Case 2008–D036.

SUPPLEMENTARY INFORMATION:

A. Background

The provision at DFARS 252.209–7001, Disclosure of Ownership or Control by the Government of a Terrorist Country, implements 10 U.S.C. 2327, which prohibits DoD from entering into a contract with a firm that is owned or controlled by the government of a country that has been determined by the Secretary of State to repeatedly provide support for acts of international terrorism. This final rule removes North Korea from the terrorist countries listed in the provision at DFARS 252.209–7001, since the Secretary of State has removed North Korea from the list of designated state sponsors of terrorism.

This rule was not subject to Office of Management and Budget review under Executive Order 12866, dated September 30, 1993.

B. Regulatory Flexibility Act

This rule will not have a significant cost or administrative impact on contractors or offerors, or a significant effect beyond the internal operating procedures of DoD. Therefore,

publication for public comment under 41 U.S.C. 418b is not required. However, DoD will consider comments from small entities concerning the affected DFARS subpart in accordance with 5 U.S.C. 610. Such comments should cite DFARS Case 2008–D036.

C. Paperwork Reduction Act

The Paperwork Reduction Act does not apply, because the rule does not impose any information collection requirements that require the approval of the Office of Management and Budget under 44 U.S.C. 3501, *et seq.*

List of Subjects in 48 CFR Part 252

Government procurement.

Michele P. Peterson,

Editor, Defense Acquisition Regulations System.

■ Therefore, 48 CFR part 252 is amended as follows:

PART 252—SOLICITATION PROVISIONS AND CONTRACT CLAUSES

■ 1. The authority citation for 48 CFR Part 252 continues to read as follows:

Authority: 41 U.S.C. 421 and 48 CFR Chapter 1.

252.209–7001 [Amended]

■ 2. Section 252.209–7001 is amended as follows:

■ a. By revising the clause date to read ''(JAN 2009)''; and

■ b. In paragraph (a)(2), in the second sentence, by removing ''North Korea,''.

[FR Doc. E9–662 Filed 1–14–09; 8:45 am]

BILLING CODE 5001–08–P

DEPARTMENT OF DEFENSE

Defense Acquisition Regulations System

48 CFR Part 252

RIN 0750–AG12

Defense Federal Acquisition Regulation Supplement; Statutory Waiver for Commercially Available Off-the-Shelf Items (DFARS Case 2008–D009)

AGENCY: Defense Acquisition Regulations System, Department of Defense (DoD).

ACTION: Interim rule with request for comments.

SUMMARY: DoD has issued an interim rule amending the Defense Federal Acquisition Regulation Supplement (DFARS) to implement a determination made by the Administrator for Federal Procurement Policy, that the Buy American Act ''component test'' is inapplicable to acquisitions of commercially available off-the-shelf items. The rule is consistent with changes made to the Federal Acquisition Regulation.

DATES: *Effective date:* January 15, 2009.

Comment date: Comments on the interim rule should be submitted in writing to the address shown below on or before March 16, 2009, to be considered in the formation of the final rule.

ADDRESSES: You may submit comments, identified by DFARS Case 2008–D009, using any of the following methods:

- *Federal eRulemaking Portal: http://www.regulations.gov.* Follow the instructions for submitting comments.
- *E-mail: dfars@osd.mil.* Include DFARS Case 2008–D009 in the subject line of the message.
- *Fax:* 703–602–7887.
- *Mail:* Defense Acquisition Regulations System, Attn: Ms. Amy Williams, OUSD (AT&L) DPAP (DARS), IMD 3D139, 3062 Defense Pentagon, Washington, DC 20301–3062.
- *Hand Delivery/Courier:* Defense Acquisition Regulations System, Crystal Square 4, Suite 200A, 241 18th Street, Arlington, VA 22202–3402.

Comments received generally will be posted without change to *http://www.regulations.gov,* including any personal information provided.

FOR FURTHER INFORMATION CONTACT: Ms. Amy Williams, 703–602–0328.

SUPPLEMENTARY INFORMATION:

A. Background

This interim rule amends DFARS provisions and clauses addressing the Buy American Act/Balance of Payments Program to implement a determination made by the Administrator for Federal Procurement Policy, on February 14, 2008, regarding laws applicable to the acquisition of commercially available off-the-shelf (COTS) items. The determination included a partial waiver of the Buy American Act (41 U.S.C. 10a and 10b), limited to the Act's domestic component test. The waiver allows a COTS item to be treated as a domestic end product if it is manufactured in the United States, without tracking the origin of the item's components. Changes were made to the Federal Acquisition Regulation in Federal Acquisition Circular 2005–30 to implement the Administrator's determination. This interim rule makes corresponding changes to the DFARS.

This rule was not subject to Office of Management and Budget review under Executive Order 12866, dated September 30, 1993.

B. Regulatory Flexibility Act

DoD does not expect this rule to have a significant economic impact on a substantial number of small entities within the meaning of the Regulatory Flexibility Act, 5 U.S.C. 601, *et seq.* Although the rule eliminates requirements for suppliers of U.S.-made items to track the origin of the item's components, the economic impact is not expected to be substantial. DoD has already waived the component test for U.S.-made items in acquisitions that are subject to the World Trade Organization Government Procurement Agreement (DFARS 225.103(a)(i)(B)). Additionally, contractors generally pass on the costs of such administrative requirements to the Government. Therefore, DoD has not performed an initial regulatory flexibility analysis. DoD invites comments from small businesses and other interested parties. DoD also will consider comments from small entities concerning the affected DFARS subparts in accordance with 5 U.S.C. 610. Such comments should be submitted separately and should cite DFARS Case 2008–D009.

C. Paperwork Reduction Act

This rule will result in a reduction of the information collection requirements previously approved under Office of Management and Budget Control Number 0704–0229, DFARS part 225 and associated clauses. DoD anticipates a 5 percent reduction in the burden hours associated with the provisions at DFARS 252.225–7000 and 252.225–7035, from 34,875 to 33,130 hours, because offerors of U.S.-made items with foreign components will no longer need to respond to these provisions.

D. Determination To Issue an Interim Rule

A determination has been made under the authority of the Secretary of Defense that urgent and compelling reasons exist to publish an interim rule prior to affording the public an opportunity to comment. This interim rule implements a determination made by the Administrator for Federal Procurement Policy on February 14, 2008, in accordance with 41 U.S.C. 431, that the Buy American Act domestic component test is inapplicable to acquisitions of COTS items. The rule will permit a COTS item to be treated as a domestic end product if it is manufactured in the United States, without the need to track the origin of the item's components. The rule will reduce administrative burdens for suppliers of COTS items and is

consistent with changes made to the Federal Acquisition Regulation. Comments received in response to this interim rule will be considered in the formation of the final rule.

List of Subjects in 48 CFR Part 252

Government procurement.

Michele P. Peterson,

Editor, Defense Acquisition Regulations System.

■ Therefore, 48 CFR part 252 is amended as follows:

PART 252—SOLICITATION PROVISIONS AND CONTRACT CLAUSES

■ 1. The authority citation for 48 CFR part 252 continues to read as follows:

Authority: 41 U.S.C. 421 and 48 CFR Chapter 1.

■ 2. Section 252.225–7000 is amended by revising the clause date and paragraphs (a), (c)(1)(ii), and (c)(3) to read as follows:

252.225–7000 Buy American Act—Balance of Payments Program Certificate.

* * * * *

BUY AMERICAN ACT—BALANCE OF PAYMENTS PROGRAM CERTIFICATE (JAN 2009)

(a) *Definitions. Commercially available off-the-shelf (COTS) item, domestic end product, foreign end product, qualifying country, qualifying country end product*, and *United States* have the meanings given in the Buy American Act and Balance of Payments Program clause of this solicitation.

* * * * *

(c) * * *

(1) * * *

(ii) For end products other than COTS items, components of unknown origin are considered to have been mined, produced, or manufactured outside the United States or a qualifying country.

* * * * *

(3) The following end products are other foreign end products, including end products manufactured in the United States that do not qualify as domestic end products, i.e., an end product that is not a COTS item and does not meet the component test in paragraph (ii) of the definition of ''domestic end product'':

(Line Item Number) _____

(Country of Origin (If known)) _____

■ 3. Section 252.225–7001 is amended as follows:

■ a. By revising the clause date;

■ b. By redesignating paragraphs (a)(1) through (8) as paragraphs (a)(2) through (9) respectively;

■ c. By adding a new paragraph (a)(1);

■ d. By revising newly designated paragraph (a)(3)(ii); and

■ e. By revising paragraph (b) to read as follows:

252.225–7001 Buy American Act and Balance of Payments Program.

* * * * *

BUY AMERICAN ACT AND BALANCE OF PAYMENTS PROGRAM (JAN 2009)

(a) * * *

(1) *Commercially available off-the-shelf (COTS) item—*

(i) Means any item of supply (including construction material) that is—

(A) A commercial item (as defined in paragraph (1) of the definition of ''commercial item'' in section 2.101 of the Federal Acquisition Regulation);

(B) Sold in substantial quantities in the commercial marketplace; and

(C) Offered to the Government, under a contract or subcontract at any tier, without modification, in the same form in which it is sold in the commercial marketplace; and

(ii) Does not include bulk cargo, as defined in section 3 of the Shipping Act of 1984 (46 U.S.C. 40102), such as agricultural products and petroleum products.

* * * * *

(3) * * *

(ii) An end product manufactured in the United States if—

(A) The cost of its qualifying country components and its components that are mined, produced, or manufactured in the United States exceeds 50 percent of the cost of all its components. The cost of components includes transportation costs to the place of incorporation into the end product and U.S. duty (whether or not a duty-free entry certificate is issued). Scrap generated, collected, and prepared for processing in the United States is considered domestic. A component is considered to have been mined, produced, or manufactured in the United States (regardless of its source in fact) if the end product in which it is incorporated is manufactured in the United States and the component is of a class or kind for which the Government has determined that—

(1) Sufficient and reasonably available commercial quantities of a satisfactory quality are not mined, produced, or manufactured in the United States; or

(2) It is inconsistent with the public interest to apply the restrictions of the Buy American Act; or

(B) The end product is a COTS item.

* * * * *

(b) This clause implements the Buy American Act (41 U.S.C. Section 10a–d). In accordance with 41 U.S.C. 431, the component test of the Buy American Act is waived for an end product that is a COTS item (see section 12.505(a)(1) of the Federal Acquisition Regulation). Unless otherwise specified, this clause applies to all line items in the contract.

* * * * *

■ 4. Section 252.225–7035 is amended by revising the clause date and paragraphs (a) and (c)(2)(iii) to read as follows:

252.225–7035 Buy American Act—Free Trade Agreements—Balance of Payments Program Certificate.

* * * * *

BUY AMERICAN ACT—FREE TRADE AGREEMENTS—BALANCE OF PAYMENTS PROGRAM CERTIFICATE (JAN 2009)

(a) *Definitions. Bahrainian end product, commercially available off-the-shelf (COTS) item, domestic end product, Free Trade Agreement country, Free Trade Agreement country end product, foreign end product, Moroccan end product, qualifying country end product*, and *United States* have the meanings given in the Buy American Act—Free Trade Agreements—Balance of Payments Program clause of this solicitation.

* * * * *

(c) * * *

(2) * * *

(iii) The following supplies are other foreign end products, including end products manufactured in the United States that do not qualify as domestic end products, i.e., an end product that is not a COTS item and does not meet the component test in paragraph (ii) of the definition of ''domestic end product'':

(Line Item Number) _____

(Country of Origin (If known)) _____

* * * * *

■ 5. Section 252.225–7036 is amended as follows:

■ a. By revising the clause date;

■ b. By redesignating paragraphs (a)(2) through (12) as paragraphs (a)(3) through (13) respectively;

■ c. By adding a new paragraph (a)(2); and

■ d. By revising newly designated paragraph (a)(4)(ii) to read as follows:

252.225–7036 Buy American Act—Free Trade Agreements—Balance of Payments Program.

* * * * *

BUY AMERICAN ACT—FREE TRADE AGREEMENTS—BALANCE OF PAYMENTS PROGRAM (JAN 2009)

(a) * * *

(2) *Commercially available off-the-shelf (COTS) item—*

(i) Means any item of supply (including construction material) that is—

(A) A commercial item (as defined in paragraph (1) of the definition of ''commercial item'' in section 2.101 of the Federal Acquisition Regulation);

(B) Sold in substantial quantities in the commercial marketplace; and

(C) Offered to the Government, under a contract or subcontract at any tier, without modification, in the same form in which it is sold in the commercial marketplace; and

(ii) Does not include bulk cargo, as defined in section 3 of the Shipping Act of 1984 (46 U.S.C. 40102), such as agricultural products and petroleum products.

* * * * *

(4) * * *

(ii) An end product manufactured in the United States if—

(A) The cost of its qualifying country components and its components that are mined, produced, or manufactured in the United States exceeds 50 percent of the cost of all its components. The cost of components includes transportation costs to the place of incorporation into the end product and U.S. duty (whether or not a duty-free entry certificate is issued). Scrap generated, collected, and prepared for processing in the United States is considered domestic. A component is considered to have been mined, produced, or manufactured in the United States (regardless of its source in fact) if the end product in which it is incorporated is manufactured in the United States and the component is of a class or kind for which the Government has determined that—

(1) Sufficient and reasonably available commercial quantities of a satisfactory quality are not mined, produced, or manufactured in the United States; or

(2) It is inconsistent with the public interest to apply the restrictions of the Buy American Act; or

(B) The end product is a COTS item.

* * * * *

■ 6. Section 252.225–7044 is amended as follows:

■ a. By revising the clause date; and

■ b. In paragraph (a), by adding, in alphabetical order, a definition of ''Commercially available off-the-shelf (COTS) item'', and by revising the definition of ''Domestic construction material'' to read as follows:

252.225–7044 Balance of Payments Program—Construction Material.

* * * * *

BALANCE OF PAYMENTS PROGRAM—CONSTRUCTION MATERIAL (JAN 2009)

(a) * * *

Commercially available off-the-shelf (COTS) item—

(1) Means any item of supply (including construction material) that is—

(i) A commercial item (as defined in paragraph (1) of the definition of ''commercial item'' in section 2.101 of the Federal Acquisition Regulation);

(ii) Sold in substantial quantities in the commercial marketplace; and

(iii) Offered to the Government, under a contract or subcontract at any tier, without modification, in the same form in which it is sold in the commercial marketplace; and

(2) Does not include bulk cargo, as defined in section 3 of the Shipping Act of 1984 (46 U.S.C. 40102), such as agricultural products and petroleum products.

* * * * *

Domestic construction material means—

(1) An unmanufactured construction material mined or produced in the United States; or

(2) A construction material manufactured in the United States, if—

(i) The cost of its components mined, produced, or manufactured in the United States exceeds 50 percent of the cost of all its components. Components of foreign origin of the same class or kind for which nonavailability determinations have been made are treated as domestic; or

(ii) The construction material is a COTS item.

* * * * *

■ 7. Section 252.225–7045 is amended as follows:

■ a. By revising the clause date; and

■ b. In paragraph (a), by adding, in alphabetical order, a definition of ''Commercially available off-the-shelf (COTS) item'', and by revising the definition of ''Domestic construction material'' to read as follows:

252.225–7045 Balance of Payments Program—Construction Material Under Trade Agreements.

* * * * *

BALANCE OF PAYMENTS PROGRAM—CONSTRUCTION MATERIAL UNDER TRADE AGREEMENTS (JAN 2009)

(a) * * *

Commercially available off-the-shelf (COTS) item—

(1) Means any item of supply (including construction material) that is—

(i) A commercial item (as defined in paragraph (1) of the definition of ''commercial item'' in section 2.101 of the Federal Acquisition Regulation);

(ii) Sold in substantial quantities in the commercial marketplace; and

(iii) Offered to the Government, under a contract or subcontract at any tier, without modification, in the same form in which it is sold in the commercial marketplace; and

(2) Does not include bulk cargo, as defined in section 3 of the Shipping Act of 1984 (46 U.S.C. 40102), such as agricultural products and petroleum products.

* * * * *

Domestic construction material means—

(1) An unmanufactured construction material mined or produced in the United States; or

(2) A construction material manufactured in the United States, if—

(i) The cost of its components mined, produced, or manufactured in the United States exceeds 50 percent of the cost of all its components. Components of foreign origin of the same class or kind for which nonavailability determinations have been made are treated as domestic; or

(ii) The construction material is a COTS item.

* * * * *

[FR Doc. E9–669 Filed 1–14–09; 8:45 am]

BILLING CODE 5001–08–P

Proposed Rules

Federal Register
Vol. 74, No. 10
Thursday, January 15, 2009

This section of the FEDERAL REGISTER contains notices to the public of the proposed issuance of rules and regulations. The purpose of these notices is to give interested persons an opportunity to participate in the rule making prior to the adoption of the final rules.

DEPARTMENT OF TRANSPORTATION

Federal Aviation Administration

14 CFR Part 39

[Docket No. FAA–2009–0007; Directorate Identifier 2008–CE–072–AD]

RIN 2120–AA64

Airworthiness Directives; Piper Aircraft, Inc. Models PA–46–350P and PA–46R–350T Airplanes

AGENCY: Federal Aviation Administration (FAA), Department of Transportation (DOT).

ACTION: Notice of proposed rulemaking (NPRM).

SUMMARY: We propose to adopt a new airworthiness directive (AD) for certain Piper Aircraft, Inc. Models PA–46–350P and PA–46R–350T airplanes. This proposed AD would require an inspection to verify the 35-amp and 250-amp current limiters are installed in the proper locations and would require a correction to the installation if the current limiters are not installed in the proper locations. This proposed AD would also limit operation to ''only under day visual flight rules (VFR)'' until the current limiter installation is inspected and corrected. This proposed AD results from three reports of incorrectly installed current limiters. We are proposing this AD to detect incorrect installation of 35-amp and 250-amp current limiters, which could result in failure of the 35-amp current limiter if installed in the 250-amp location. This failure could lead to a total loss of electrical power.

DATES: We must receive comments on this proposed AD by March 16, 2009.

ADDRESSES: Use one of the following addresses to comment on this proposed AD:

- *Federal eRulemaking Portal:* Go to *http://www.regulations.gov*. Follow the instructions for submitting comments.
- *Fax:* (202) 493–2251.
- *Mail:* U.S. Department of Transportation, Docket Operations, M–30, West Building Ground Floor, Room W12–140, 1200 New Jersey Avenue, SE., Washington, DC 20590.
- *Hand Delivery:* U.S. Department of Transportation, Docket Operations, M–30, West Building Ground Floor, Room W12–140, 1200 New Jersey Avenue, SE., Washington, DC 20590, between 9 a.m. and 5 p.m., Monday through Friday, except Federal holidays.

For service information identified in this proposed AD, contact Piper Aircraft, Inc., 2926 Piper Drive, Vero Beach, Florida 32960; *telephone:* (772) 978–6573; *Internet: http://www.newpiper.com/company/publications.asp.*

FOR FURTHER INFORMATION CONTACT: John Lee, Aerospace Engineer, One Crown Center, 1895 Phoenix Blvd., Suite 450, Atlanta, Georgia 30349; *telephone:* (770) 994–6736; *fax:* (770) 703–6097.

SUPPLEMENTARY INFORMATION:

Comments Invited

We invite you to send any written relevant data, views, or arguments regarding this proposed AD. Send your comments to an address listed under the **ADDRESSES** section. Include the docket number, ''FAA–2009–0007; Directorate Identifier 2008–CE–072–AD'' at the beginning of your comments. We specifically invite comments on the overall regulatory, economic, environmental, and energy aspects of the proposed AD. We will consider all comments received by the closing date and may amend the proposed AD in light of those comments.

We will post all comments we receive, without change, to *http://www.regulations.gov*, including any personal information you provide. We will also post a report summarizing each substantive verbal contact we receive concerning this proposed AD.

Discussion

We have received information that, when troubleshooting an alternator problem, a mechanic found a blown 35-amp current limiter installed in place of a 250-amp current limiter in the electrical power panel assembly on a Piper Aircraft, Inc. Model PA–46–350P airplane. Further inspection revealed a 250-amp current limiter installed in place of a 35-amp current limiter in the same electrical power panel assembly. The 35-amp current limiter was installed where the 250-amp current limiter should have been installed, and the 250-amp current limiter was installed where the 35-amp current limiter should have been installed. We have also received reports of two other occurrences of current limiters installed in the wrong locations on the affected airplanes.

This condition, if not corrected, could result in total loss of electrical power.

Relevant Service Information

We have reviewed Piper Aircraft, Inc. Service Bulletin No. 2000, dated September 16, 2008. The service information describes procedures for inspecting the 35-amp and 250-amp current limiter installations and correcting the installation if the current limiters are not installed in the proper locations.

FAA's Determination and Requirements of the Proposed AD

We are proposing this AD because we evaluated all information and determined the unsafe condition described previously is likely to exist or develop on other products of the same type design. This proposed AD would require an inspection to verify the 35-amp and 250-amp current limiters are installed in the proper locations and correct the installation if the current limiters are not installed in the proper locations. This proposed AD would also limit operation to only under day VFR until the current limiter installation is inspected and corrected.

Costs of Compliance

We estimate that this proposed AD would affect 118 airplanes in the U.S. registry.

We estimate the following costs to do the proposed inspection:

Labor cost	Parts cost	Total cost per airplane	Total cost on U.S. operators
1 work-hour × $80 per hour = $80	Not applicable	$80	$9,440

We estimate the following costs to do any necessary repairs that would be required based on the results of the proposed inspection. We have no way of determining the number of airplanes that may need this repair:

Labor cost	Parts cost	Total cost per airplane
1 work-hour × $80 per hour = $80	Not applicable	$80

Authority for This Rulemaking

Title 49 of the United States Code specifies the FAA's authority to issue rules on aviation safety. Subtitle I, Section 106, describes the authority of the FAA Administrator. Subtitle VII, Aviation Programs, describes in more detail the scope of the Agency's authority.

We are issuing this rulemaking under the authority described in Subtitle VII, Part A, Subpart III, Section 44701, ''General requirements.'' Under that section, Congress charges the FAA with promoting safe flight of civil aircraft in air commerce by prescribing regulations for practices, methods, and procedures the Administrator finds necessary for safety in air commerce. This regulation is within the scope of that authority because it addresses an unsafe condition that is likely to exist or develop on products identified in this rulemaking action.

Regulatory Findings

We have determined that this proposed AD would not have federalism implications under Executive Order 13132. This proposed AD would not have a substantial direct effect on the States, on the relationship between the national Government and the States, or on the distribution of power and responsibilities among the various levels of government.

For the reasons discussed above, I certify that the proposed regulation:

1. Is not a ''significant regulatory action'' under Executive Order 12866;

2. Is not a ''significant rule'' under the DOT Regulatory Policies and Procedures (44 FR 11034, February 26, 1979); and

3. Will not have a significant economic impact, positive or negative, on a substantial number of small entities under the criteria of the Regulatory Flexibility Act.

We prepared a regulatory evaluation of the estimated costs to comply with this proposed AD and placed it in the AD docket.

Examining the AD Docket

You may examine the AD docket that contains the proposed AD, the regulatory evaluation, any comments received, and other information on the Internet at *http://www.regulations.gov*; or in person at the Docket Management Facility between 9 a.m. and 5 p.m., Monday through Friday, except Federal holidays. The Docket Office (telephone (800) 647–5527) is located at the street address stated in the **ADDRESSES** section. Comments will be available in the AD docket shortly after receipt.

List of Subjects in 14 CFR Part 39

Air transportation, Aircraft, Aviation safety, Incorporation by reference, Safety.

The Proposed Amendment

Accordingly, under the authority delegated to me by the Administrator, the FAA proposes to amend 14 CFR part 39 as follows:

PART 39—AIRWORTHINESS DIRECTIVES

1. The authority citation for part 39 continues to read as follows:

Authority: 49 U.S.C. 106(g), 40113, 44701.

§ 39.13 [Amended]

2. The FAA amends § 39.13 by adding the following new AD:

Piper Aircraft, Inc.: Docket No. FAA–2009–0007; Directorate Identifier 2008–CE–072–AD.

Comments Due Date

(a) We must receive comments on this airworthiness directive (AD) action by March 16, 2009.

Affected ADs

(b) None.

Applicability

(c) This AD applies to the following airplane models and serial numbers that are certificated in any category:

Models	Serial Nos.
PA–46–350P	4636375 through 4636447.
PA–46R–350T	4692001 through 4692068.

Unsafe Condition

(d) This AD results from three reports of incorrectly installed current limiters. We are issuing this AD to detect incorrect installation of 35-amp and 250-amp current limiters, which could result in failure of the 35-amp current limiter if installed in the 250-amp location. This failure could lead to a total loss of electrical power.

Compliance

(e) To address this problem, you must do the following, unless already done:

Actions	Compliance	Procedures
(1) Insert the following into the Limitations section of the airplane flight manual (AFM): ''Operate Only under Day Visual Flight Rules (VFR).'' You may remove the limitations specified in this paragraph after doing the action required in paragraphs (e)(2) and (e)(3) of this AD, as applicable.	Before further flight after the effective date of this AD.	Under 14 CFR 43.7, the owner/operator holding at least a private pilot certificate is allowed to insert the information into the AFM as specified in paragraph (e)(1) of this AD. You may insert a copy of this AD into the Limitations section of the AFM to comply with this action. Make an entry into the aircraft logbook showing compliance with this portion of the AD per compliance with 14 CFR 43.9.
(2) Inspect the 35-amp and 250-amp current limiters for installation in the proper location.	Within 100 hours time-in-service after the effective date of this AD.	Follow Piper Aircraft, Inc. Service Bulletin No. 2000, dated September 16, 2008.
(3) If you find any current limiter not in the proper location, reinstall the current limiter in the proper location.	Before further flight after the inspection required in paragraph (e)(2) of this AD.	Follow Piper Aircraft, Inc. Service Bulletin No. 2000, dated September 16, 2008.

Alternative Methods of Compliance (AMOCs)

(f) The Manager, Atlanta Aircraft Certification Office (ACO), FAA, has the authority to approve AMOCs for this AD, if requested using the procedures found in 14 CFR 39.19. Send information to ATTN: John Lee, Aerospace Engineer, One Crown Center, 1895 Phoenix Blvd., Suite 450, Atlanta, Georgia 30349; *telephone:* (770) 994–6736; *fax:* (770) 703–6097. Before using any approved AMOC on any airplane to which the AMOC applies, notify your appropriate principal inspector (PI) in the FAA Flight Standards District Office (FSDO), or lacking a PI, your local FSDO.

Related Information

(g) To get copies of the service information referenced in this AD, contact Piper Aircraft, Inc., 2926 Piper Drive, Vero Beach, Florida 32960; *telephone:* (772) 978–6573; Internet: *http://www.newpiper.com/company/publications.asp*. To view the AD docket, go to U.S. Department of Transportation, Docket Operations, M–30, West Building Ground Floor, Room W12–140, 1200 New Jersey Avenue, SE., Washington, DC 20590, or on the Internet at *http://www.regulations.gov*.

Issued in Kansas City, Missouri, on January 7, 2009.

John Colomy,

Acting Manager, Small Airplane Directorate, Aircraft Certification Service.

[FR Doc. E9–728 Filed 1–14–09; 8:45 am]

BILLING CODE 4910–13–P

DEPARTMENT OF TRANSPORTATION

Federal Aviation Administration

14 CFR Part 71

[Docket No. FAA–2008–1259; Airspace Docket No. 08–ASO–1]

Proposed Modification of the Atlantic High and San Juan Low Offshore Airspace Areas; East Coast, United States

AGENCY: Federal Aviation Administration (FAA), DOT.

ACTION: Notice of proposed rulemaking (NPRM).

SUMMARY: This action proposes to amend the boundaries of the Atlantic High and San Juan Low Offshore Airspace Areas located off the east coast of the United States. The implementation of the West Atlantic Route System Plus (WATRS Plus) project modified the boundaries of the Miami Control Area (CTA)/Flight Identification Region (FIR), the San Juan CTA/FIR, and the New York Oceanic CTA/FIR. This action proposes to modify the Atlantic High and San Juan Low Offshore Airspace Area boundaries to coincide with the CTA/FIR changes.

DATES: Comments must be received on or before March 2, 2009.

ADDRESSES: Send comments on the proposal to the U.S. Department of Transportation, Docket Operations, M–30, 1200 New Jersey Avenue, SE., West Building Ground Floor, Room W12–140, Washington, DC 20590–0001; telephone: (202) 366–9826. You must identify the docket number FAA–2008–1259 and Airspace Docket No. 08–ASO–1, at the beginning of your comments. You may also submit comments on the Internet at *http://www.regulations.gov*.

FOR FURTHER INFORMATION CONTACT: Paul Gallant, Airspace and Rules Group, Office of System Operations Airspace and AIM, Federal Aviation Administration, 800 Independence Avenue, SW., Washington, DC 20591; telephone: (202) 267–8783.

SUPPLEMENTARY INFORMATION:

Comments Invited

Interested parties are invited to participate in this proposed rulemaking by submitting such written data, views, or arguments as they may desire. Comments that provide the factual basis supporting the views and suggestions presented are particularly helpful in developing reasoned regulatory decisions on the proposal. Comments are specifically invited on the overall regulatory, aeronautical, economic, environmental, and energy-related aspects of the proposal.

Communications should identify both docket numbers (FAA Docket No. FAA–2008–1259 and Airspace Docket No. 08–ASO–1) and be submitted in triplicate to the Docket Management Facility (see **ADDRESSES** section for address and phone number). You may also submit comments through the Internet at *http://www.regulations.gov*.

Commenters wishing the FAA to acknowledge receipt of their comments on this action must submit with those comments a self-addressed, stamped postcard on which the following statement is made: ''Comments to FAA Docket No. FAA–2008–1259 and Airspace Docket No. 08–ASO–1.'' The postcard will be date/time stamped and returned to the commenter.

All communications received on or before the specified closing date for comments will be considered before taking action on the proposed rule. The proposal contained in this action may be changed in light of comments received. All comments submitted will be available for examination in the public docket both before and after the closing date for comments. A report summarizing each substantive public contact with FAA personnel concerned with this rulemaking will be filed in the docket.

Availability of NPRMs

An electronic copy of this document may be downloaded through the Internet at *http://www.regulations.gov*. Recently published rulemaking documents can also be accessed through the FAA's Web page at *http://www.faa.gov/airports_airtraffic/air_traffic/publications/airspace_amendments/*.

You may review the public docket containing the proposal, any comments received and any final disposition in person in the Dockets Office (see **ADDRESSES** section for address and phone number) between 9 a.m. and 5 p.m., Monday through Friday, except Federal holidays. An informal docket may also be examined during normal business hours at the office of the Eastern Service Center, Federal Aviation Administration, Room 210, 1701 Columbia Avenue, College Park, Georgia 30337.

Persons interested in being placed on a mailing list for future NPRM's should contact the FAA's Office of Rulemaking, (202) 267–9677, for a copy of Advisory Circular No. 11–2A, Notice of Proposed Rulemaking Distribution System, which describes the application procedure.

The Proposal

The FAA is proposing an amendment to Title 14 Code of Federal Regulations (14 CFR) part 71 to modify the boundaries of the Atlantic High and San Juan Low Offshore Airspace Areas to match boundary changes to the Miami, San Juan and New York Oceanic CTA/FIRs, which were modified by the implementation of the WATRS Plus project. The WATRS Plus project introduced a redesigned route structure and a reduced lateral separation standard on oceanic routes in the WATRS Plus CTAs to enhance en route capacity. The proposed change is a minor realignment of one point common to both the Atlantic High and San Juan Low Offshore Airspace area boundaries. The point at lat. 21°08′00″ N., long. 67°45′00″ W. would be changed to read lat. 21°14′21″ N., long. 67°39′02″ W.

High offshore airspace areas are published in paragraph 2003, and low offshore airspace areas are published in paragraph 6007, of FAA Order 7400.9S signed October 3, 2008, and effective October 31, 2008, which is incorporated by reference in 14 CFR 71.1. The offshore airspace areas listed in this document will be published subsequently in the Order.

The FAA has determined that this proposed regulation only involves an

established body of technical regulations for which frequent and routine amendments are necessary to keep them operationally current. Therefore, this proposed regulation: (1) Is not a ''significant regulatory action'' under Executive Order 12866; (2) is not a ''significant rule'' under Department of Transportation (DOT) Regulatory Policies and Procedures (44 FR 11034; February 26, 1979); and (3) does not warrant preparation of a regulatory evaluation as the anticipated impact is so minimal. Since this is a routine matter that will only affect air traffic procedures and air navigation, it is certified that this proposed rule, when promulgated, will not have a significant economic impact on a substantial number of small entities under the criteria of the Regulatory Flexibility Act.

The FAA's authority to issue rules regarding aviation safety is found in Title 49 of the United States Code. Subtitle I, Section 106 describes the authority of the FAA Administrator. Subtitle VII, Aviation Programs, describes in more detail the scope of the agency's authority.

This rulemaking is promulgated under the authority described in Subtitle VII, Part A, Subpart I, Section 40103. Under that section, the FAA is charged with prescribing regulations to assign the use of the airspace necessary to ensure the safety of aircraft and the efficient use of airspace. This regulation is within the scope of that authority as it modifies the High and Low offshore airspace areas located off the east coast of the United States.

ICAO Considerations

As part of this proposal relates to navigable airspace outside the United States, this proposal is submitted in accordance with the International Civil Aviation Organization (ICAO) International Standards and Recommended Practices.

The application of International Standards and Recommended Practices by the FAA, Office of System Operations Airspace and AIM, Airspace & Rules Group, in areas outside the United States domestic airspace, is governed by the Convention on International Civil Aviation. Specifically, the FAA is governed by Article 12 and Annex 11, which pertain to the establishment of necessary air navigational facilities and services to promote the safe, orderly, and expeditious flow of civil air traffic. The purpose of Article 12 and Annex 11 is to ensure that civil aircraft operations on international air routes are performed under uniform conditions.

The International Standards and Recommended Practices in Annex 11 apply to airspace under the jurisdiction of a contracting state, derived from ICAO. Annex 11 provisions apply when air traffic services are provided and a contracting state accepts the responsibility of providing air traffic services over high seas or in airspace of undetermined sovereignty. A contracting state accepting this responsibility may apply the International Standards and Recommended Practices that are consistent with standards and practices utilized in its domestic jurisdiction.

In accordance with Article 3 of the Convention, state-owned aircraft are exempt from the Standards and Recommended Practices of Annex 11. The United States is a contracting state to the Convention. Article 3(d) of the Convention provides that participating state aircraft will be operated in international airspace with due regard for the safety of civil aircraft. Since this action involves, in part, the designation of navigable airspace outside the United States, the Administrator is consulting with the Secretary of State and the Secretary of Defense in accordance with the provisions of Executive Order 10854.

List of Subjects in 14 CFR Part 71

Airspace, Incorporation by reference, Navigation (air).

The Proposed Amendment

In consideration of the foregoing, the Federal Aviation Administration proposes to amend 14 CFR part 71 as follows:

PART 71—DESIGNATION OF CLASS A, B, C, D AND E AIRSPACE AREAS; AIR TRAFFIC SERVICE ROUTES; AND REPORTING POINTS

1. The authority citation for part 71 continues to read as follows:

Authority: 49 U.S.C. 106(g), 40103, 40113, 40120; E.O. 10854, 24 FR 9565, 3 CFR, 1959–1963 Comp., p. 389.

§ 71.1 [Amended]

2. The incorporation by reference in 14 CFR 71.1 of FAA Order 7400.9S, Airspace Designations and Reporting Points, signed October 3, 2008 and effective October 31, 2008, is amended as follows:

Paragraph 2003—Offshore Airspace Areas.

* * * * *

Atlantic High [Amended]

That airspace extending upward from 18,000 feet MSL to and including FL 600 within the area bounded on the east from north to south by the Moncton FIR, New York Oceanic CTA/FIR, and the San Juan Oceanic CTA/FIR; to the point where the San Juan Oceanic CTA/FIR boundary turns southwest at lat. 21°14′21″ N., long. 67°39′02″ W., thence from that point southeast via a straight line to intersect a 100-mile radius of the Fernando Luis Ribas Dominicci Airport at lat. 19°47′28″ N., long. 67°09′37″ W., thence counter-clockwise via a 100-mile radius of the Fernando Luis Ribas Dominicci Airport to lat. 18°53′05″ N., long. 67°47′43″ W., thence from that point northwest via a straight line to intersect the point where the Santo Domingo FIR turns northwest at lat. 19°39′00″ N., long. 69°09′00″ W., thence from that point the area is bounded on the south from east to west by the Santo Domingo FIR, Port-Au-Prince CTA/FIR, and the Havana CTA/FIR; bounded on the west from south to north by the Houston Oceanic CTA/FIR, southern boundary of the Jacksonville Air Route Traffic Control Center and a line 12 miles offshore and parallel to the U.S. shoreline.

* * * * *

Paragraph 6007—Offshore Airspace Areas.

* * * * *

San Juan Low, PR [Amended]

That airspace extending upward from 5,500 feet MSL from the point of intersection of the San Juan Oceanic CTA/FIR and Miami Oceanic CTA/FIR boundary at lat. 21°14′21″ N., long. 67°39′02″ W., thence from that point southeast via a straight line to intersect a 100-mile radius of the Fernando Luis Ribas Dominicci Airport at lat. 19°47′28″ N., long. 67°09′37″ W., thence clockwise via a 100-mile radius of the Fernando Luis Ribas Dominicci Airport to lat. 18°53′05″ N., long. 67°47′43″ W., thence from that point northwest via a straight line to intersect the point where the Santo Domingo FIR turns northwest at lat. 19°39′00″ N., long. 69°09′00″ W., thence from that point northeast along the San Juan CTA/FIR and Miami CTA/FIR boundary to the point of beginning.

* * * * *

Issued in Washington, DC, on January 5, 2009.

Edith V. Parish,

Manager, Airspace and Rules Group.

[FR Doc. E9–501 Filed 1–14–09; 8:45 am]

BILLING CODE 4910–13–P

CONSUMER PRODUCT SAFETY COMMISSION

16 CFR Part 1500

Children's Products Containing Lead; Notice of Proposed Procedures and Requirements for a Commission Determination or Exclusion

AGENCY: Consumer Product Safety Commission.

ACTION: Notice of proposed procedures and requirements.

SUMMARY: On August 14, 2008, Congress enacted the Consumer Product Safety

Improvement Act of 2008 (CPSIA), Public Law 110–314. The Commission proposes to establish procedures and requirements for: A Commission determination that a commodity or class of materials or a specific material or product does not exceed the lead content limits specified under section 101(a) of the CPSIA; or an exclusion of a commodity or class of materials or a specific material or product under section 101(b), that exceeds the lead content limits under section 101(a), but which will not result in the absorption of any lead into the human body nor have any other adverse impact on public health or safety. This notice sets out and solicits comments on proposed procedures and requirements and information to be supplied with such requests.

DATES: Written comments and submissions in response to this notice must be received by February 17, 2009.

ADDRESSES: Comments on the proposed procedures and requirements for Commission determinations that specific materials or products do not exceed the lead content limits should be e-mailed to *Sec101Determinations@cpsc.gov*. Comments should be captioned ''Section 101(a) Determinations.'' Comments on the proposed procedures and requirements for Commission decisions on requests for exclusions under section 101(b) should be e-mailed to *Sec101Exclusions@cpsc.gov*. Comments should be captioned ''Section 101(b) Exclusions.'' Comments may also be mailed, preferably in five copies, to the Office of the Secretary, Consumer Product Safety Commission, Room 502, 4330 East West Highway, Bethesda, Maryland 20814, or delivered to the same address (telephone (301) 504–7923). Comments also may be filed by facsimile to (301) 504–0127.

Comments on the Paperwork Reduction Act burdens posed by these proposals should be directed to the Desk Officer for the Consumer Product Safety Commission, Office of Information and Regulatory Affairs, OMB, Washington, DC 20503. The Commission asks commenters to provide copies of such comments to the Commission's Office of the Secretary, with a caption or cover letter identifying the materials as comments submitted to OMB on the proposed collection of information requirements in the proposed procedures and requirements under sections 101(a) and (b) of the CPSIA.

FOR FURTHER INFORMATION CONTACT: Kristina Hatlelid, PhD, M.P.H., Directorate for Health Sciences, Consumer Product Safety Commission, 4330 East West Highway, Bethesda, Maryland 20814; telephone (301) 504–7254; e-mail *khatlelid@cpsc.gov*.

SUPPLEMENTARY INFORMATION:

A. Background

The CPSIA establishes specific limits on lead in children's products. Section 101(a) of the CPSIA provides that by February 10, 2009, products designed or intended primarily for children 12 and younger may not contain more than 600 ppm of lead. After August 14, 2009, products designed or intended primarily for children 12 and younger cannot contain more than 300 ppm of lead. On August 14, 2011, the limit may be further reduced to 100 ppm unless the Commission determines that it is not technologically feasible to have this lower limit. Paint, coatings or electroplating may not be considered a barrier that would make the lead content of a product inaccessible to a child.

B. Legal Considerations

1. Materials or Products That Do Not Exceed the Lead Limits

Under section 101(a) of CPSIA, consumer products designed or intended primarily for children 12 years old and younger that do not contain more than 600 ppm of lead (as of February 10, 2009), 300 ppm of lead (as of August 14, 2009); 100 ppm after three years (as of August 14, 2011), unless the Commission determines that it is not technologically feasible to have this lower limit, are not considered to be banned hazardous substances under the Federal Hazardous Substances Act (FHSA). However, in the absence of Commission action, children's products remain subject to the testing requirements of section 102 of the CPSIA (codified at § 14 of the Consumer Product Safety Act (CPSA)).

Under these provisions, for children's products manufactured on and after February 10, 2009, general conformity certificates certifying that they comply with the applicable lead content limit are required. The certification must be based on tests of each product or a reasonable testing program. On and after August 14, 2009, absent Commission action to the contrary, the certificates must be based on testing performed by a third-party laboratory whose accreditation to perform the testing has been accepted by the Commission. Comments submitted to the Commission suggest that these testing and certification requirements will result in significant expense for products that may be inherently free of lead or dangerous lead levels.

Section 3 of the CPSIA grants the Commission general rulemaking authority to issue regulations, as necessary, to implement the CPSIA. There may be certain commodities or classes of products or materials that inherently do not contain lead or contain lead at levels that would not exceed the lead content limits under section 101(a) of the CPSIA. To the extent that such materials or products exist, the Commission, either of its own initiative or upon the request of an interested person, is proposing to exercise its CPSIA section 3 authority to make determinations that certain commodities or classes of material or products do not exceed the lead limits of section 101(a). This rule proposes a procedure by which the Commission will address requests for determinations that these types of materials or products do not and would not exceed the lead limits. The effect of such a Commission finding would be to relieve that material or product from the testing requirement of section 102 for purposes of supporting the required certification.

If this proposal is issued in final form, the Commission would concentrate its efforts on evaluating those materials that are commodity-like, are used across industry in a number of applications, and are subject to detailed consensus standards related to lead content and other pertinent properties. Given the Commission's resources, requests to evaluate individual products of a single manufacturer would be assigned a very low priority.

Of course even where a material or product has been so relieved of the testing requirement, it must still meet the statutory lead level requirements in actual fact. The Commission will obtain and test products in the marketplace to assure that this remains the case and will take appropriate enforcement action in situations where that is not the case.

2. Materials or Products That Exceed the Lead Limits

The Commission is also proposing procedures to address requests for exclusions for certain products or materials that exceed the lead content limits in section 101(a). Section 101(b)(1) of the CPSIA provides that the Commission may, by regulation, exclude a specific product or material that exceeds the lead limits established for children's products under section 101(a) if the Commission, after notice and a hearing, determines on the basis of the best-available, objective, peer-reviewed, scientific evidence that lead in such product or material will neither (a) result in the absorption of any lead

into the human body, taking into account normal and reasonably foreseeable use and abuse of such product by a child, including swallowing, mouthing, breaking, or other children's activities, and the aging of the product; nor (b) have any other adverse impact on public health or safety.

Under section 101(b) of the CPSIA, the Commission is required to provide notice and a hearing to consider and evaluate the best-available, objective, peer-reviewed, scientific data before promulgating a rule on exclusions. Section 553 of the Administrative Procedure Act (APA), provides that after notice, the agency must give interested persons an opportunity to participate in the rule making through submission of written data, views, or arguments with or without opportunity for oral presentation. 5 U.S.C. 553(c). Section 101(b) does not require a ''hearing on the record,'' which would trigger more extensive procedural requirements under the APA. Accordingly, for this matter the Commission has determined that an oral hearing is not necessary to satisfy the requirements of due process.[1] Given the highly technical nature of the information sought—peer-reviewed, scientific data—the Commission believes that the APA notice and comment procedures based on written submissions would provide the most efficient process for obtaining the required information as well as provide adequate opportunity for all interested parties to participate in the proceedings.

C. Procedures and Requirements

1. Inherent Lead Content Level Determination

Any request for a Commission determination that a specific material or product contains no lead or a lead level below the applicable statutory limit must be supported by objectively reasonable and representative test results or other scientific evidence showing that the product or material does not, and would not, exceed the lead limit specified in the request.

A justification submitted by an interested party for a determination must include a detailed description of the product or material; data on the lead content of parts of the product or the materials used in the production of a product; data or information on manufacturing processes through which lead may be introduced into the product or material; any other information relevant to the potential for the lead content of the product or material to exceed the statutory lead limit specified in the request, that is 600 ppm, 300 ppm, or 100 ppm, as applicable; and detailed information on the test methods used to support such data, including the type of equipment used and any other techniques employed, as well as a statement as to why the data is representative of the lead content of such products or materials generally and why the assessment of the manufacturing processes strongly supports a conclusion that they would not be a source of lead contamination of the product or material, if relevant. MSDS sheets will not be sufficient to satisfy the representative testing criteria because they do not show sufficient information regarding lead content. Rather, the showing necessary to obtain an exclusion must be based on objectively reasonable and representative testing of the material or product.

As noted above, given the potential number of requests for determinations that might be submitted to the Commission, the Commission would evaluate industry-wide applications for commodities or classes of materials or products based on technical specifications or other data suggesting that the generic commodity or class of materials is representative of that used by a number of manufacturers before it will review any brand specific products or proprietary formulas from individual manufacturers. The type of materials or product classes that the Commission considers may fall within the class for priority evaluation might include, but not be limited to, materials such as paper, vegetable dyes, inks, adhesives, fabrics, and the like, provided that adequate documentation of the technical specifications of the materials or products such that they are representative of a broad class and testing data is provided as to those generic products. In time, the Commission would apply the same criteria on a product by product or material by material basis, if necessary, and provided it has the resources to do so.

Upon receipt of a complete request for a determination, the Commission proposes to direct the Office of Hazard Identification and Reduction to assess the request and make an initial determination. If the recommendation is to grant the exclusion, the Commission will publish a notice of proposed rulemaking inviting public comment on whether the determination should be granted in final form, and the Office of Hazard Identification and Reduction will review and evaluate the comments and supporting documentation before making its recommendation to the Commission for final agency action.

2. Exclusion of a Material or Product Exceeding Lead Content Limit

For products that exceed the lead content limits prescribed in section 101(a) of the CPSIA, the Commission proposes procedures that will allow the Commission to evaluate products or materials for possible exclusions under section 101(b)(1) of the CPSIA. Under this section, such evaluations must be based on the best-available, objective, peer-reviewed, scientific evidence showing that lead in such product or material will not result in the absorption of any lead into the body, taking into account normal and reasonable foreseeable use and abuse by a child, nor have any other adverse impact on health or safety. Therefore, a request for an exclusion must be supported by the best-available, objective, peer-reviewed, scientific evidence that address these issues, such as test results indicating how much lead is present in the product, how much lead comes out of the product and the conditions under which that may happen, and information relating to a child's interaction, if any, with the product.[2]

Upon receipt of a complete exclusion request, the Commission proposes to direct the Office of Hazard Identification and Reduction to assess the request and make an initial determination. If the recommendation is to grant the exclusion, the Commission will publish a notice of proposed rulemaking inviting public comment on whether the exclusion should be issued in final form, and the Office of Hazard Identification and Reduction will review and evaluate the comments and supporting documentation before making its recommendation to the Commission for final agency action.

D. Effect of Filing a Lead Content Determination or Exclusion Request

The filing of a request for a lead content determination or for an exclusion would not have the effect of automatically staying the effect of any provision or limit under the statutes and regulations enforced by the Commission. Unless issued in final form by the Commission after notice and comment, all CPSC requirements related to the lead content in the material or

[1] The Supreme Court has held that paper hearing procedures are adequate where, in the total context of the process, they are deemed to ensure adequate notice and a genuine opportunity to explain one's case. *Mathews* v. *Eldridge,* 424 U.S. 319, 334–35 (1976). *See also United States* v. *Florida East Coast Railway Co.,* 410 U.S. 224, 238–41(1973).

[2] The Commission notes that the statutory language of section 101(b)(1) makes it difficult to make a showing that would be adequate to exclude any material or product on that basis.

product and all applicable testing and certification requirements would remain in full force and effect. CPSIA § 101(e). However, the Commission's ability to exercise its enforcement discretion is not eliminated nor diminished.

E. Impact on Small Businesses

Under the Regulatory Flexibility Act (RFA), when an agency issues a proposed rule, it generally must prepare an initial regulatory flexibility analysis describing the impact the proposed rule is expected to have on small entities. 5 U.S.C. 603. The RFA does not require a regulatory flexibility analysis if the head of the agency certifies that the rule will not have a significant effect on a substantial number of small entities.

The Commission's Directorate for Economic Analysis prepared a preliminary assessment of the impact of relieving certain materials or products from the testing requirements of section 102 of the CPSIA. That assessment found that the procedures and requirements would only impact those firms that wish to seek a formal Commission determination or exclusion from the requirements. Its only potential effect on businesses, including small businesses, will be to reduce the costs that would have been associated with testing the materials under section 102 of the CPSIA, if the request is granted. Based on the foregoing assessment, the Commission preliminarily finds that the proposed rule would not have a significant impact on a substantial number of small entities.

F. Environmental Considerations

Generally, CPSC rules are considered to ''have little or no potential for affecting the human environment,'' and environmental assessments are not usually prepared for these rules (see 16 CFR 1021.5(c)(1)). The proposed rule will not result in any additional use of lead over what is occurring at the present time. Therefore, the Commission does not expect the proposal to have any negative environmental impact.

G. Executive Orders

According to Executive Order 12988 (February 5, 1996), agencies must state in clear language the preemptive effect, if any, of new regulations. The preemptive effect of regulations such as this proposal is stated in section 18 of the FHSA. 15 U.S.C. 1261n.

H. Paperwork Reduction Act

Since the proposed rule would require manufacturers to provide certain information along with any request for a Commission determination or exclusion, the proposed rule contains ''collection of information requirements'' as that term is used in the Paperwork Reduction Act, 44 U.S.C. 3501–3520. Therefore, the proposed rule is being submitted to the Office of Management and Budget (OMB) in accordance with 44 U.S.C. 3507(d) and implementing regulations codified at 5 CFR 1320.11. The estimated costs of these requirements will depend on the number of requests that are received by the Commission.

The number of manufacturers or importers that might seek a determination that their products or materials do not contain lead or exceed the lead content limits or that might seek an exclusion from the lead-content requirements for their product is not currently known. The requirements for obtaining a determination or exclusion are extensive, which may be a deterrent to some firms; however, because a very broad range of products, materials and components are affected by the lead content limits, the number of firms seeking such determinations or exclusions could be higher than expected. It would be expected that the firms making such requests would be familiar with the product or material for which the determination or exemption is sought and the required information may already be in the firm's possession or easily obtainable.

Based on comments received on the CPSIA lead content provisions thus far, staff estimates that a minimum of approximately 250 firms may submit requests. The burden to assemble the information and prepare the submission, if performed by a senior level management employee, may take approximately 40 hours. The compensation would be approximately $60 an hour (U.S. Department of Labor, Bureau of Labor Statistics), and the average cost of preparing a submission would be about $2,400 ($60 × 40). An estimate of the annual burden for the information collection could reach $600,000.

An estimate of the burden on the federal government to review each submission could be as much as 24 hours at an average hourly wage of $56, the equivalent of a GS–14 employee, or $1,344 for each submission ($56 × 24). If approximately 250 submissions are received, the cost of the annual burden to the federal government will be approximately $336,000.

I. Effective Date

The APA generally requires that a substantive rule be published not less than 30 days before its effective date, unless the agency finds for good cause shown, that a lesser time period is required. 5 U.S.C. 553(d)(3). Because the Commission recognizes the need for providing procedures for Commission determinations and exclusions expeditiously, for good cause shown, the proposed effective date is the date of publication of a final rule in the **Federal Register**.

J. List of Relevant Documents

(1) Memorandum from Kristina M. Hatlelid, PhD, M.P.H., Toxicologist, Directorate for Health Sciences ''Consumer Product Safety Improvement Act of 2008 (CPSIA): Exclusions from Compliance with Limits for Lead, Certain Materials of Products: Required Technical Information.'' December 2008.

(2) Memorandum from Robert Franklin, Economist, Directorate for Economic Analysis, ''Procedures for Determinations Regarding Lead Limits and Procedures for Exclusions from Lead Limits Under Section 101 of the Consumer Product Safety Improvement: Small Business and Environmental Impacts.'' December 2008.

List of Subjects in 16 CFR Part 1500

Consumer protection, Hazardous materials, Hazardous substances, Imports, Infants and children, Labeling, Law enforcement, and Toys.

K. Conclusion

For the reasons stated above, the Commission proposes to amend title 16 of the Code of Federal Regulations as follows:

PART 1500—HAZARDOUS SUBSTANCES AND ARTICLES: ADMINISTRATION AND ENFORCEMENT REGULATIONS

1. The authority for part 1500 is amended to read as follows:

Authority: 15 U.S.C. 1261–1278, 122 Stat. 3016.

2. Add new §§ 1500.89 and 1500.90 to read as follows:

§ 1500.89 Procedures for Determinations Regarding Lead Content of Materials or Products under Section 101(a) of the Consumer Product Safety Improvement Act.

(a) The Consumer Product Safety Improvement Act provides for specific lead limits in children's products. Section 101(a) of the CPSIA provides that by February 10, 2009, products designed or intended primarily for children 12 and younger may not contain more than 600 ppm of lead. After August 14, 2009, products designed or intended primarily for children 12 and younger cannot contain

more than 300 ppm of lead. On August 14, 2011, the limit may be further reduced to 100 ppm, unless the Commission determines that it is not technologically feasible to meet this lower limit. Paint, coatings or electroplating may not be considered a barrier that would make the lead content of a product inaccessible to a child.

(b) The Commission may, either on its own initiative or upon the request of any interested person, make a determination that a material or product does not contain lead levels that exceed 600 ppm, 300 ppm or 100 ppm.

(c) To request a determination under paragraph (b) of this section, the request must:

(1) Be e-mailed to *cpsc-os@cpsc.gov* and titled ''Section 101 Request for Lead Content Determination.'' Requests may also be mailed, preferably in five copies, to the Office of the Secretary, Consumer Product Safety Commission, Room 502, 4330 East-West Highway, Bethesda, Maryland 20814, or delivered to the same address.

(2) Be written in the English language.

(3) Contain the name and address, and e-mail address or telephone number, of the requestor.

(4) Provide Documentation including:

(i) A detailed description of the product or material;

(ii) Data on the lead content of parts of the product or materials used in the production of a product;

(iii) Data or information on manufacturing processes through which lead may be introduced into the product or material;

(iv) Any other information relevant to the potential for lead content of the product or material to exceed the CPSIA lead limits that is reasonably available to the requestor;

(v) Detailed information on the relied upon test methods for measuring lead content of products or materials including the type of equipment used or any other techniques employed and a statement as to why the data is representative of the lead content of such products or materials generally; and

(vi) An assessment of the manufacturing processes which strongly supports a conclusion that they would not be a source of lead contamination of the product or material, if relevant.

(d) Where a submission fails to meet all of the requirements of paragraph (c) of this section, the Office of the Secretary shall notify the person submitting it, describe the deficiency, and explain that the request may be resubmitted when the deficiency is corrected.

(e) Each complete request for a Commission determination will be reviewed by the Office of Hazard Identification and Reduction who will preliminarily recommend granting or denying the request. Where the preliminary determination is to grant, the Commission will publish a notice of proposed rulemaking inviting public comment on whether the preliminary determination should be granted in final form, and the Office of Hazard Identification and Reduction will review and evaluate the comments and supporting documentation before making its recommendation to the Commission for final agency action.

(f) The filing of a request for a determination does not have the effect of automatically staying the effect of any provision or limit under the statutes and regulations enforced by the Commission. Even though a request for a determination has been filed, unless a Commission determination is issued in final form after notice and comment, materials or products subject to the lead limits under section 101 of the CPSIA must be tested in accordance with section 102 of the CPSIA.

§ 1500.90 Procedures for Exclusions from Lead Limits under Section 101(b) of the Consumer Product Safety Improvement Act.

(a) The Consumer Product Safety Improvement Act provides for specific lead limits in children's products. Section 101(a) of the CPSIA provides that by February 10, 2009, products designed or intended primarily for children 12 and younger may not contain more than 600 ppm of lead. After August 14, 2009, products designed or intended primarily for children 12 and younger cannot contain more than 300 ppm of lead. On August 14, 2011, the limit may be further reduced to 100 ppm, unless the Commission determines that it is not technologically feasible to have this lower limit. Paint, coatings or electroplating may not be considered a barrier that would make the lead content of a product inaccessible to a child.

(b) Section 101(b)(1) of the CPSIA provides that the Commission may exclude a specific product or material from the lead limits established for children's products under the CPSIA if the Commission, after notice and a hearing, determines on the basis of the best-available, objective, peer-reviewed, scientific evidence that lead in such product or material will neither:

(1) Result in the absorption of any lead into the human body, taking into account normal and reasonably foreseeable use and abuse of such product by a child, including swallowing, mouthing, breaking, or other children's activities, and the aging of the product; nor

(2) Have any other adverse impact on public health or safety.

(c) To request an exclusion from the lead limits as provided under paragraph (a) of this section, the request must:

(1) Be e-mailed to *cpsc-os@cpsc.gov*. and titled ''Section 101 Request for Exclusion of a Material or Product.'' Requests may also be mailed, preferably in five copies, to the Office of the Secretary, Consumer Product Safety Commission, Room 502, 4330 East West Highway, Bethesda, Maryland 20814, or delivered to the same address.

(2) Be written in the English language.

(3) Contain the name and address, and e-mail address or telephone number, of the requester.

(4) Provide Documentation including:

(i) A detailed description of the product or material;

(ii) Data on the lead content of parts of the product or materials used in the production of a product;

(iii) Data or information on manufacturing processes through which lead may be introduced into the product or material;

(iv) Any other information relevant to the potential for lead content of the product or material to exceed the CPSIA lead limits that is reasonably available to the requestor;

(v) Detailed information on the relied upon test methods for measuring lead content of products or materials including the type of equipment used or any other techniques employed and a statement as to why the data is representative of the lead content of such products or materials generally; and

(vi) An assessment of the manufacturing processes which strongly supports a conclusion that they would not be a source of lead contamination of the product or material, if relevant.

(5) Provide best-available, objective, peer-reviewed, scientific evidence to support a request for an exclusion that addresses how much lead is present in the product, how much lead comes out of the product, and the conditions under which that may happen, and information relating to a child's interaction, if any, with the product.

(6) Provide best-available, objective, peer-reviewed, scientific evidence that is unfavorable to the request that is reasonably available to the requestor.

(d) Where a submission fails to meet all of the requirements of paragraph (c) of this section, the Office of the Secretary shall notify the person submitting it, describe the deficiency,

and explain that the request may be resubmitted when the deficiency is corrected.

(e) Each complete request for exclusion will be reviewed by the Office of Hazard Identification and Reduction, who will preliminarily recommend granting or denying the request. Where the preliminary determination is to grant, the Commission will publish a notice of proposed rulemaking inviting public comment on whether the proposed exclusion should be issued in final form, and the Office of Hazard Identification and Reduction will review and evaluate the comments and supporting documentation before making its recommendation to the Commission for final agency action.

(f) The filing of a request for exclusion does not have the effect of automatically staying the effect of any provision or limit under the statutes and regulations enforced by the Commission. Even though a request for an exclusion has been filed, unless an exclusion is issued in final form by the Commission after notice and comment, materials or products subject to the lead limits under section 101 of the CPSIA are considered to be banned hazardous substances if they do not meet the lead limits.

Dated: January 9, 2009.

Todd A. Stevenson,

Secretary, Consumer Product Safety Commission.

[FR Doc. E9–715 Filed 1–14–09; 8:45 am]

BILLING CODE 6335–01–P

CONSUMER PRODUCT SAFETY COMMISSION

16 CFR Part 1500

Children's Products Containing Lead; Proposed Determinations Regarding Lead Content Limits on Certain Materials or Products; Notice of Proposed Rulemaking

AGENCY: Consumer Product Safety Commission.

ACTION: Notice of proposed rulemaking.

SUMMARY: On August 14, 2008, Congress enacted the Consumer Product Safety Improvement Act of 2008 (CPSIA), Public Law 110–314, 122 Stat. 3016. This notice of proposed rulemaking (NPR) initiates a proceeding under section 3 of the CPSIA authorizing the Commission to issue regulations, as necessary, to implement the CPSIA. In this document, the Commission solicits written comments concerning preliminary determinations on certain natural, untreated and unadulterated materials and metals that have not been found to exceed the lead content limits prescribed under section 101(a) of the CPSIA.

DATES: Written comments and submissions in response to this notice must be received by February 17, 2009.

ADDRESSES: Comments should be e-mailed to *Sec101Determinations@cpsc.gov*. Comments should be captioned ''Section 101 Determinations of Certain Materials or Products NPR.'' Comments may also be mailed, preferably in five copies, to the Office of the Secretary, Consumer Product Safety Commission, Room 502, 4330 East West Highway, Bethesda, Maryland 20814, or delivered to the same address (telephone (301) 504–7923). Comments also may be filed by facsimile to (301) 504–0127.

FOR FURTHER INFORMATION CONTACT: Kristina Hatlelid, PhD, M.P.H., Directorate for Health Sciences, Consumer Product Safety Commission, 4330 East West Highway, Bethesda, Maryland 20814; telephone (301) 504–7254, e-mail *khatlelid@cpsc.gov*.

SUPPLEMENTARY INFORMATION:

A. Background

Under section 101(a) of CPSIA, consumer products designed or intended primarily for children 12 years old and younger that do not contain more than 600 ppm of lead (as of February 10, 2009), 300 ppm of lead (as of August 14, 2009); 100 ppm after three years (as of August 14, 2011), unless the Commission determines that it is not technologically feasible to have this lower limit, are not considered to be banned hazardous substances under the Federal Hazardous Substances Act (FHSA). However, in the absence of Commission action, these products and materials remain subject to the testing requirements of section 102 of the CPSIA (codified at § 14 of the Consumer Product Safety Act (CPSA)).

Under these provisions, on and after February 10, 2009, general conformity certificates certifying that they comply with the applicable lead content limit are required for children's products. The certification must be based on tests of each product or a reasonable testing program. On and after August 14, 2009, absent Commission action to the contrary, the certificates must be based on testing performed by a laboratory whose accreditation to perform the testing has been accepted by the Commission.

Section 3 of the CPSIA grants the Commission general rulemaking authority to issue regulations, as necessary, to implement the CPSIA. There may be certain products or materials that inherently do not contain lead or contain lead at levels that do not exceed the lead content limits under section 101(a) of the CPSIA. To the extent that such materials or products exist, the Commission, of its own initiative, is proposing to exercise its section 3 authority to make preliminary determinations that certain commodities or classes of materials or products do not exceed the lead limits prescribed in section 101(a) of the CPSIA. The effect of such a Commission finding would be to relieve the material or product from the testing requirement of section 102 of the CPSIA for purposes of supporting the required certification. Of course even where a material or product has been so relieved of the testing requirement, it must still meet the statutory lead level requirements in actual fact. The Commission will obtain and test products in the marketplace to assure that this remains the case and will take appropriate enforcement action in situations where that is not the case.

B. Proposed Determinations on Certain Products and Materials

The Commission staff identified a number of commodities or classes of materials that do not inherently contain lead or contain lead that does not exceed the CPSIA lead limits of 600 ppm or 300 ppm.

Certain Natural Materials

Based on the staff's review, the Commission preliminarily determines that the following natural materials do not exceed the 600 ppm or 300 ppm lead content limits under section 101(a) of the CPSIA. These preliminary determinations are based on materials that are untreated and unadulterated with respect to the addition of materials or chemicals, including pigments, dyes, coatings, finishes or any other substance, and that do not undergo any processing that could result in the addition of lead into the product or material:

1. Precious gemstones: Diamond, ruby, sapphire, emerald
2. Certain semiprecious gemstones provided that the mineral or material is not based on lead or lead compounds and is not associated in nature with any mineral that is based on lead or lead compounds (minerals that contain lead or are associated in nature with minerals that contain lead include, but are not limited to, the following: Aragonite, bayldonite, boleite, cerussite, crocoite, linarite, mimetite, phosgenite, vanadinite, and wulfenite)
3. Natural or cultured pearls
4. Wood

5. Natural fibers such as cotton, silk, wool, hemp, flax, linen

6. Other natural materials including coral, amber, feathers, fur, untreated leather

Certain Metals and Alloys

Based on the staff's review, the Commission preliminarily determines that the following metals and alloys do not exceed the 600 ppm or 300 ppm lead content limits under section 101(a) of the CPSIA provided that no lead or lead-containing metal is intentionally added:

1. Surgical steel

2. Precious metals: Gold (at least 10 karat); sterling silver (at least 925/1000); platinum; palladium; rhodium; osmium; iridium; ruthenium

The preliminary determinations do not extend to the non-steel or non-precious metal components of a product, such as solder or base metals in electroplate, clad, or fill applications.

C. Requests for Comments

All interested persons are invited to submit to the Commission their comments and data concerning the Commission's preliminary determinations on the listed natural materials and metals and alloys. In particular, the Commission invites interested persons to submit any test results showing that substances covered by the proposed rule had lead exceeding the lead limits in section 101(a) of the CPSIA. In addition, the Commission seeks comments on:

- Other natural fibers that would not exceed the lead content limits
- Other natural materials that would not exceed the lead content limits
- Other metals or alloys that would not exceed the lead content limits
- Other materials, which by their nature, would not exceed the lead content limits.

Comments should be e-mailed to *Sec101Determinations@cpsc.gov*. Comments should be captioned ''Section 101 Determinations of Certain Materials or Products NPR.'' Comments may also be mailed, preferably in five copies, to the Office of the Secretary, Consumer Product Safety Commission, Room 502, 4330 East West Highway, Bethesda, Maryland 20814, or delivered to the same address (telephone (301) 504–7923). Comments also may be filed by facsimile to (301) 504–0127. All comments and submissions should be received no later than February 17, 2009.

D. Impact on Small Businesses

Under the Regulatory Flexibility Act (RFA), when an agency issues a proposed rule, it generally must prepare an initial regulatory flexibility analysis describing the impact the proposed rule is expected to have on small entities. 5 U.S.C. 603. The RFA does not require a regulatory flexibility analysis if the head of the agency certifies that the rule will not have a significant effect on a substantial number of small entities.

The Commission's Directorate for Economic Analysis prepared a preliminary assessment of the impact of relieving certain materials or products from the testing requirements of section 102 of the CPSIA if they were found to be inherently under the lead content limits prescribed. The number of small businesses that will be directly affected by the rule is unknown but could be considerable. However, it will not result in any increase in the costs of production for any firm. Its only effect on businesses, including small businesses, will be to reduce the costs that would have been associated with testing the materials under section 102 of the CPSIA. Based on the foregoing assessment, the Commission preliminarily finds that the proposed rule would not have a significant impact on a substantial number of small entities.

E. Environmental Considerations

Generally, CPSC rules are considered to ''have little or no potential for affecting the human environment,'' and environmental assessments are not usually prepared for these rules (see 16 CFR 1021.5(c)(1)). The proposed rule will not result in any additional lead in the environment since such materials do not contain lead or contain lead at levels that do not exceed the CPSIA limits. Therefore, the Commission does not expect the proposed rule to have any negative environmental impact.

F. Executive Orders

According to Executive Order 12988 (February 5, 1996), agencies must state in clear language the preemptive effect, if any, of new regulations. The preemptive effect of regulations such as this proposal is stated in section 18 of the FHSA. 15 U.S.C. 1261n.

G. Effective Date

The Administrative Procedure Act requires that a substantive rule must be published not less than 30 days before its effective date, unless the rule relieves a restriction. 5 U.S.C. 553(d)(1). Because the proposed rule would provide relief from existing testing requirements under the CPSIA, the proposed effective date is the date of publication of a final rule in the **Federal Register**.

H. List of Relevant Documents

(1) Memorandum from Kristina M. Hatlelid, PhD, M.P.H., Toxicologist, Directorate for Health Sciences ''Consumer Product Safety Improvement Act of 2008 (CPSIA): Certain Materials or Products that Do Not Exceed the Limits for Lead Content.'' December 2008.

(2) Memorandum from Robert Franklin, Economist, Directorate for Economic Analysis, ''Preliminary regulatory analysis of a rule making determinations that certain materials or products do not have lead contents that exceed the limits established in section 101(a) of the CPSIA.'' December 2008.

List of Subjects in 16 CFR Part 1500

Consumer protection, Hazardous materials, Hazardous substances, Imports, Infants and children, Labeling, Law enforcement, and Toys.

I. Conclusion

For the reasons stated above, the Commission proposes to amend title 16 of the Code of Federal Regulations as follows:

PART 1500—HAZARDOUS SUBSTANCES AND ARTICLES: ADMINISTRATION AND ENFORCEMENT REGULATIONS

1. The authority for part 1500 is amended to read as follows:

Authority: 15 U.S.C. 1261–1278, 122 Stat. 3016.

2. Add a new § 1500.91 to read as follows:

§ 1500.91 Determinations Regarding Lead Content for Certain Materials or Products under Section 101 of the Consumer Product Safety Improvement Act.

(a) The Consumer Product Safety Improvement Act provides for specific lead limits in children's products. Section 101(a) of the CPSIA provides that by February 10, 2009, products designed or intended primarily for children 12 and younger may not contain more than 600 ppm of lead. After August 14, 2009, products designed or intended primarily for children 12 and younger cannot contain more than 300 ppm of lead. On August 14, 2011, the limit may be further reduced to 100 ppm, unless the Commission determines that it is not technologically feasible to have this lower limit. Paint, coatings or electroplating may not be considered a barrier that would make the lead content of a product inaccessible to a child.

(b) Section 3 of the CPSIA grants the Commission general rulemaking

authority to issue regulations, as necessary, either on its own initiative or upon the request of any interested person, to make a determination that a material or product does not exceed the lead limits as provided under paragraph (a) of this section.

(c) The following natural materials do not exceed the 600 ppm or 300 ppm lead content limits under section 101(a) of the CPSIA provided that these materials have neither been treated or adulterated with the addition of materials or chemicals such as pigments, dyes, coatings, finishes or any other substance, nor undergone any processing that could result in the addition of lead into the product or material:

(1) Precious gemstones: Diamond, ruby, sapphire, emerald.

(2) Semiprecious gemstones provided that the mineral or material is not based on lead or lead compounds and is not associated in nature with any mineral that is based on lead or lead compounds (minerals that contain lead or are associated in nature with minerals that contain lead include, but are not limited to, the following: Aragonite, bayldonite, boleite, cerussite, crocoite, linarite, mimetite, phosgenite, vanadinite, and wulfenite).

(3) Natural or cultured pearls.

(4) Wood.

(5) Natural fibers such as cotton, silk, wool, hemp, flax, linen.

(6) Other natural materials including coral, amber, feathers, fur, untreated leather.

(d) The following metals and alloys do not exceed the 600 ppm or 300 ppm lead content limits under section 101(a) of the CPSIA provided that no lead or lead-containing metal is intentionally added but does not include the non-steel or non-precious metal components of a product, such as solder or base metals in electroplate, clad, or fill applications:

(1) Surgical steel.

(2) Precious metals: Gold (at least 10 karat); sterling silver (at least 925/1000); platinum; palladium; rhodium; osmium; iridium; ruthenium.

Dated: January 9, 2009.

Todd A. Stevenson,

Secretary, Consumer Product Safety Commission.

[FR Doc. E9–714 Filed 1–14–09; 8:45 am]

BILLING CODE 6335–01–P

CONSUMER PRODUCT SAFETY COMMISSION

16 CFR Part 1500

Children's Products Containing Lead; Exemptions for Certain Electronic Devices; Notice of Proposed Rulemaking

AGENCY: Consumer Product Safety Commission.

ACTION: Notice of proposed rulemaking.

SUMMARY: On August 14, 2008, Congress enacted the Consumer Product Safety Improvement Act of 2008 (CPSIA), Public Law 110–314, 122 Stat. 3016. Section 101 of the CPSIA provides for specific lead limits in children's products. Section 101(b)(2) of the CPSIA provides that the lead limits will not apply to any component part of a children's product that is not accessible to a child through normal and reasonably foreseeable use and abuse. In addition, section 101(b)(4) of the CPSIA provides that if the Commission determines that it is not technologically feasible for certain electronic devices to comply with the lead limits, the Commission must issue requirements by regulation to eliminate or minimize the potential for exposure to and accessibility of lead in such electronic devices and establish a compliance schedule unless the Commission determines that full compliance is not technologically feasible. For certain electronic devices for which it is not technologically feasible to meet the lead limits, the Commission is proposing requirements to eliminate or minimize the potential for exposure and accessibility of lead.

DATES: Written comments and submissions in response to this notice must be received by February 17, 2009.

FOR FURTHER INFORMATION CONTACT: Comments should be e-mailed to *Sec101ElectronicDevices@cpsc.gov*. Comments should be captioned ''Section 101 Electronic Devices NPR.'' Comments may also be mailed, preferably in five copies, to the Office of the Secretary, Consumer Product Safety Commission, Room 502, 4330 East West Highway, Bethesda, Maryland 20814, or delivered to the same address (telephone (301) 504–7923). Comments also may be filed by facsimile to (301) 504–0127.

SUPPLEMENTARY INFORMATION:

A. Background

The CPSIA provides for specific lead limits in children's products. Section 101(a) of the CPSIA provides that by February 10, 2009, products designed or intended primarily for children 12 and younger may not contain more than 600 ppm of lead. After August 14, 2009, products designed or intended primarily for children 12 and younger cannot contain more than 300 ppm of lead. The limit may be further reduced to 100 ppm after three years, or August 14, 2011, unless the Commission determines that it is not technologically feasible to have this lower limit. A children's product is defined as a consumer product designed or intended primarily for children 12 years of age or younger under section 235(a) of the CPSIA (to be codified at section 3(a)(2) of the Consumer Product Safety Act). In determining whether a consumer product is primarily intended for a child 12 years of age or younger, the following factors will be considered:

- A statement by the manufacturer about the intended use of such product, including a label on such product if such statement is reasonable.
- Whether the product is represented in its packaging, display, promotion or advertising as appropriate for use by children 12 years of age or younger.
- Whether the product is commonly recognized by consumers as being intended for use by a child 12 years of age or younger.
- The Age Determination Guidelines issued by the Commission in September 2002, and any successor to such guidelines.

Section 101(b)(2) of the CPSIA provides that the lead limits do not apply to component parts of a product that are not accessible to a child. This section specifies that a component part is not accessible if it is not physically exposed by reason of a sealed covering or casing and does not become physically exposed through reasonably foreseeable use and abuse of the product including swallowing, mouthing, breaking, or other children's activities, and the aging of the product, as determined by the Commission. Paint, coatings, or electroplating may not be considered to be a barrier that would render lead in the substrate to be inaccessible to a child. Section 101 (b)(2)(B) further provides that the Commission must promulgate a rule providing guidance with respect to what product components or classes of components will be considered to be inaccessible. A proposed interpretative rule providing guidance on inaccessibility is published elsewhere in this **Federal Register**.

In addition, if the Commission determines that it is not now technologically feasible for certain electronic devices to comply with the lead limits, section 101(b)(4) of the

CPSIA provides that the Commission issue requirements by regulation to eliminate or minimize the potential for exposure to and accessibility of lead in such electronic devices, and establish a schedule for achieving full compliance unless the Commission determines that full compliance with the lead limits is not technologically feasible within such a schedule. Technological feasibility is based on the commercial availability of products, technology, or other practices that will allow compliance with the lead limits.

On September 26, 2008, the Commission staff requested comments on the CPSC Web site on section 101(b)(2), Exception for Inaccessible Component Parts, and section 101(b)(4), Certain Electronic Devices. Staff specifically requested comments and information regarding:

- The identification of children's electronic devices for which lead is currently used in any concentration in any part or component of the product.
- Whether it is technologically feasible to achieve in all parts of children's electronic devices the 600 ppm lead limit; the 300 ppm limit; the 100 ppm limit.
- Whether any children's electronic product currently on the market contains lead-containing component parts that are inaccessible, and the reasons why such component parts are considered inaccessible.
- Current compliance with or possibility of compliance with regulations, such as the European Union directive on the restriction of use of hazardous substances (EU RoHS Directive 2002/95/EC), or other standards including information on: The lead limit in the standard being met (e.g., EU RoHS lead limit is 1000 ppm); whether compliance with such a standard was being met because of the existence of an exemption that specifically allows the use of lead in some parts of a product, and identification of such lead-containing parts.

B. Comments

Fourteen comments addressed the use of lead in children's electronic devices. Eight comments addressed the issue of the technological feasibility of certain electronic devices meeting the CPSIA lead limits, indicating that for certain materials or parts, it would be difficult to achieve the specified maximum lead limits. One commenter interpreted technological feasibility as referring to cost-benefit analysis.

The Commission's proposed exemptions are based in part on the information provided by these commenters, along with other information provided by the Commission staff, regarding the difficulty in attaining compliance with the CPSIA for certain materials or products. Technological feasibility as defined in the CPSIA means commercial availability of materials or parts, or the possible future availability of materials or parts. It does not refer to economic considerations, such as cost-benefit analysis.

Six comments addressed electronic components that are generally enclosed within the product, asserting that only ingestible parts should be considered accessible, based on small parts testing. The CPSIA defines accessibility as physical exposure to lead-containing component parts. Based on staff's review, the Commission preliminarily determines that an accessible component part of a children's product is one that a child may touch or place in the mouth, not just a part that a child might ingest. Physical inaccessibility refers generally to a component part that is located inside a product that a child cannot touch. Accordingly, the Commission is recommending in a proposed interpretative rule published elsewhere in this **Federal Register**, the use of accessibility probes, as well as appropriate use and abuse testing, to evaluate access to lead-containing component parts.

Several comments were received on other standards that address the use of lead in electronic devices, specifically the European Union Directive 2002/95/EC on the restriction of the use of certain hazardous substances in electrical and electronic equipment (often abbreviated as EU RoHS). Most comments stated that EU RoHS requirements would be appropriate for regulating children's electronic products. One comment cautioned that the EU RoHS directive does not allow an exemption for inaccessible parts and should not be adopted for use in the United States.

Because the Commission recognizes that it is currently not technologically feasible for certain parts of electronic devices to comply with the CPSIA lead limits, and because the exemptions published in the Annex to EU Directive 2002/95/EC are based, in part, on scientific technological feasibility, the Commission proposes to adopt, as exemptions to the CPSIA lead limits for electronic devices, those exemptions, provided that the exemption is based on a functional requirement both for the use of a lead-containing component and for the use of lead in such component. However, the Commission does not propose to adopt the EU RoHS exemption for crystal glass or any other exemption for uses of lead that are solely decorative or otherwise non-functional since those articles would customarily be subject to the CPSIA lead limits. The current EU RoHS exemptions are available at *http://eur-lex.europa.eu/en/index/htm*, and an annotated version is attached to the staff briefing memorandum referenced in the list of relevant documents. Since the EU RoHS process for reviewing exemptions is ongoing, the Commission proposes to adopt future exemptions promulgated under EU Directive 2002/95/EC, if consistent with the Commission's determinations that are issued in a final rule on exemptions for certain electronic devices. The general lead limit in the EU RoHS directive is 0.1 percent (equivalent to 1000 parts per million (ppm)), while the CPSIA limits are 600 ppm as of February 10, 2009, 300 ppm as of August 14, 2009, and as of August 14, 2011, 100 ppm, if technologically feasible. Under the Commission's proposed approach, exemption is necessary for any accessible component exceeding the pertinent CPSIA lead limit.

C. Exemptions for Certain Electronic Devices

Electronic devices are included in certain children's products regulated under the provisions of the CPSIA. The CPSIA provides authority for the Commission under section 101(b)(4), to issue regulations concerning certain electronic devices to eliminate or minimize the potential for exposure to and accessibility of lead in such electronic devices if it is not technologically feasible to comply with the lead limits set by the Act.

1. Inaccessible Electronic Devices

Some lead-containing component parts of electronic devices are, by design, not accessible to children because the lead is fully enclosed within a component that is itself within the electronic device. Other components could be made to be inaccessible, taking account of normal and reasonably foreseeable use and abuse by children. Accessibility of the lead-containing component may be evaluated through application of the accessibility probes described in 16 CFR 1500.48 and 1500.49, before and after use and abuse tests at 16 CFR 1500.50 through 1500.53 (excluding the bite tests of 1500.51(c) and 1500.52(c)). If a component, whether an electronic device or not, is not accessible to a child, it is not subject to the lead limits under the CPSIA. A proposed guidance rule on

inaccessibility is published elsewhere in this **Federal Register**.

2. Accessible Electronic Devices That Are Exempt

Certain components cannot be produced without lead for safety reasons and cannot be made physically inaccessible. An example is a cathode ray tube, in which the lead in the glass protects users from the x-ray radiation generated by the device during normal operation.

The European Union and other countries and authorities have adopted restrictions on the use of lead and other chemicals in electronic devices. The purpose of the restrictions is to address concerns related to human health and environmental impacts of waste electrical and electronic equipment. EU Directive 2002/95/EC [1] on the restriction of the use of certain hazardous substances in electrical and electronic equipment, implemented July 1, 2006, specifies that substances such as lead be substituted with safer materials. The directive specifies a maximum concentration for lead of 0.1 percent (equivalent to 1000 parts per million (ppm)) in each homogeneous material in an electronic device.

The directive allows certain exemptions ''if substitution is not possible from the scientific and technical point of view or if the negative environmental or health impacts caused by substitution are likely to outweigh the human and environmental benefits of the substitution,'' but it also specifies that exemptions must be reviewed at least every four years with the aim of removing such exemptions if it becomes technologically or scientifically possible to replace the lead in a particular application. Most exemptions refer to specific types of products or components or other applications without providing restrictions on lead concentration. Other exemptions allow applications that exceed the generally applicable 1000 ppm limit for lead content, but specify alternate maximum lead concentrations for the indicated materials. There is no exemption in the directive based on inaccessibility, since the goal is to restrict the overall use of lead in products.

Some of the EU RoHS exemptions involve lead-containing components that would likely be inaccessible to children using electronic devices. Under the CPSIA, if the component is not accessible to a child, it would not be subject to the lead limits. A proposed guidance rule on inaccessibility is published elsewhere in this **Federal Register**. However, the Commission believes that some exempted uses of lead, such as the cathode ray tubes discussed above, and certain other components that create electrical connections or that are required for product functions, cannot be made inaccessible. With respect to children's electronic devices, the Commission seeks comments on what components listed in the EU Directive 2002/95/EC, other than cathode ray tubes, cannot currently be made inaccessible to a child and why.

Because the EU RoHS exemptions were established in part to consider the technological feasibility of limiting the use of lead, the Commission proposes to adopt, as exemptions to the CPSIA lead limits for electronic devices, the exemptions published in the Annex to the EU Directive 2002/95/EC, provided that the exemption is based on a functional requirement both for the use of a lead-containing component and for the use of lead in such component. The existing EU RoHS exemptions for cathode ray tubes and certain components or the metal alloys used to make certain components allow the use of lead in applications for which substitution of the lead is not yet feasible. On the other hand, the directive provides an exemption for crystal glass used solely for decorative purposes. Since such use is not required for the function of the electronic device, the Commission proposes to disallow the crystal glass exemption and any other exemption for decorative or non-functional uses of lead for children's electronic devices subject to the CPSIA lead limits.

Except for crystal glass and other non-functional uses of lead for children's electronic devices, to the extent that a lead-containing component part is used in an electronic device and is within the exemptions published in the Annex to the EU Directive 2002/95/EC, or is otherwise inaccessible to a child, that component part would be relieved from the testing requirement of section 102 for purposes of supporting the required certification. The current EU RoHS exemptions are available at *http://eur-lex.europa.eu/en/index/htm*, and an annotated list of the exemptions are attached to the staff briefing memorandum referenced in the list of relevant documents. Since the EU RoHS process for reviewing exemptions is ongoing, the Commission proposes to adopt future exemptions promulgated under EU Directive 2002/95/EC, if consistent with the Commission's determinations that are issued in a final rule on exemptions for certain electronic devices.

Of course even where a component part has been relieved of the testing requirement, other component parts that are accessible or that do not fall within the scope of the EU RoHS exemptions must still meet the statutory lead level requirements, and would be subject to the testing requirement of section 102 of the CPSIA. The Commission will obtain and test products in the marketplace to assure that this remains the case and will take appropriate enforcement action in situations where that is not the case.

3. Removable or Replaceable Component Parts

Some components of electronic devices may be removable or replaceable. For example, battery packs and light bulbs may be provided as spare or replacement parts. Until such components are installed in the product, lead-containing parts may be accessible to a child. However, the Commission proposes that spare parts or other removable components be considered inaccessible under the provisions of the CPSIA, provided that the lead-containing component is inaccessible when the product is assembled in functional form or if the component itself meets the criteria for exemption, such as under the possible exemptions with respect to EU RoHS.

4. Accessible Electronic Devices Which Are Not Exempt

All component parts of electronic devices that exceed the CPSIA's specified lead limits which cannot be made inaccessible and that are not exempted on the basis of exemptions adopted by the Commission from EU RoHS must comply with the lead limits specified in the CPSIA. The Commission notes that the implementation of EU RoHS and similar regulations has resulted in enormous advances in electronics technologies. On the basis of the preliminary information obtained by the staff, the Commission believes that in many, if not most, cases, materials and components used in electronic devices that meet the EU RoHS directive's general lead limit at 1000 ppm will also meet the CPSIA's 600 ppm limit, and possibly the 300 ppm limit. Therefore, the Commission's expectation is that, with the exception of a few particular applications such as cathode ray tubes, many electronic devices will be in compliance with the CPSIA lead provisions either because they already meet the lead content limits or through the exception for inaccessibility of lead-

[1] European Union Directive 2002/95/EC and amendments to the directive are available at *http://eur-lex.europa.eu/en/index.htm*.

containing component parts. However, to the extent that an accessible component part does not qualify for EU RoHS exemption, it must continue to meet the CPSIA lower lead limits, not the EU RoHS lead limit of 1000 ppm.

5. Periodic Review

Because of the changing state of technology and continuing progress in replacing lead with other substances, and consistent with the CPSIA mandate to conduct periodic reviews under section 101(b)(5), the Commission will direct staff to reevaluate the technological feasibility of compliance with the lead limits for electronic devices, including the status of EU RoHS limits and exemptions, no less than every five years.

D. Impact on Small Businesses

Under the Regulatory Flexibility Act (RFA), when an agency issues a proposed rule, it generally must prepare an initial regulatory flexibility analysis describing the impact the proposed rule is expected to have on small entities. 5 U.S.C. 603. The RFA does not require a regulatory flexibility analysis if the head of the agency certifies that the rule will not have a significant effect on a substantial number of small entities.

The Commission's Directorate for Economic Analysis prepared a preliminary assessment of the impact of excluding certain electronic devices from the requirements of Section 101(a) of the CPSIA. That assessment found that the potential cost of the rule consists of the continued risk associated with the absorption of lead from the children's electronic products that, in the absence of the exemption, would not have been available for use. The potential benefit, on the other hand, consists of the value that consumers attach to having the otherwise barred children's electronic devices available for use. Because the rule would allow the continued use of some lead-containing electronic devices intended for the use of children, when it is not technologically feasible to produce the devices without lead, there would be some amount of exposure of lead from these products. However, the exemptions are not expected to increase the lead exposure to children from electronic devices, relative to pre-CPSIA levels. In some cases, limitations on the exemptions should help reduce lead exposure. For example, under the exemptions proposed in the rule, the use of lead crystal with children's electronic products for decorative purposes would not be allowed. Additionally, the exemptions could, in some cases, ultimately result in reduced lead exposure if, in the absence of the exemptions, parents would have substituted for their children's use electronic products intended for the general public—products not subject to the lead limitations of the CPSIA.

The number of small businesses that will be directly affected by the rule is unknown but could be considerable. However, because the proposed rule is designed to exempt certain specified materials from the requirements of section 101(a) of the CPSIA, it will not result in any increase in the costs of production for any firm. Its only effect on businesses, including small businesses, will be to reduce the costs that would have been associated with testing the exempted materials.

Based on the foregoing assessment, the Commission preliminarily finds that the proposed rule would not have a significant impact on a substantial number of small entities.

E. Environmental Considerations

Generally, CPSC rules are considered to ''have little or no potential for affecting the human environment,'' and environmental assessments are not usually prepared for these rules (see 16 CFR 1021.5(c)(1)). The proposed rule will not result in any additional use of lead over what is occurring at the present time. Therefore, the Commission does not expect the proposal to have any negative environmental impact.

F. Executive Orders

According to Executive Order 12988 (February 5, 1996), agencies must state in clear language the preemptive effect, if any, of new regulations. The preemptive effect of regulations such as this proposal is stated in section 18 of the Federal Hazardous Substances Act. 15 U.S.C. 1261n.

G. Effective Date

The Administrative Procedure Act requires that a substantive rule must be published not less than 30 days before its effective date, unless it grants an exemption. 5 U.S.C. 553(d)(1). Because the proposed rule would grant exemptions from the existing requirements, the effective date will be the date of publication of a final rule in the **Federal Register**.

H. Request for Comments

Interested persons are invited to submit comment on the proposed rule. Comments should be e-mailed to *Sec101ElectronicDevices@cpsc.gov.* Comments should be captioned ''Section 101 Electronic Devices NPR.'' Comments may also be mailed, preferably in five copies, to the Office of the Secretary, Consumer Product Safety Commission, Room 502, 4330 East West Highway, Bethesda, Maryland 20814, or delivered to the same address (telephone (301) 504–7923). Comments also may be filed by facsimile to (301) 504–0127.

I. List of Relevant Documents

(1) Memorandum from Kristina M. Hatlelid, PhD, M.P.H., Toxicologist, Directorate for Health Sciences ''Consumer Product Safety Improvement Act of 2008 (CPSIA) Exclusions and Exemptions from Compliance with Limits for Lead: Inaccessibility and Certain Electronic Devices.'' December 2008.

(2) Memorandum from Robert Franklin, Economist, Directorate for Economic Analysis, ''Preliminary Regulatory Analysis of a Rule Exempting Certain Electronic Devices from Section 101(a) of the Consumer Product Safety Improvement Act.'' December 2008.

List of Subjects in 16 CFR Part 1500

Consumer protection, Hazardous materials, Hazardous substances, Imports, Infants and children, Labeling, Law enforcement, and Toys.

J. Conclusion

For the reasons stated above, the Commission amends Title 16 of the Code of Federal Regulations as follows:

PART 1500—HAZARDOUS SUBSTANCES AND ARTICLES: ADMINISTRATION AND ENFORCEMENT REGULATIONS

1. The authority for part 1500 is amended to read as follows:

Authority: 15 U.S.C. 1261–1278, 122 Stat. 3016.

2. Add a new § 1500.88 to read as follows:

§ 1500.88 Exemptions from Lead Limits under section 101 of the Consumer Product Safety Improvement Act for Certain Electronic Devices.

(a) The Consumer Product Safety Improvement Act (CPSIA) provides for specific lead limits in children's products. Section 101(a) of the CPSIA provides that by February 10, 2009, products designed or intended primarily for children 12 and younger may not contain more than 600 ppm of lead. After August 14, 2009, products designed or intended primarily for children 12 and younger cannot contain more than 300 ppm of lead. On August 14, 2011, the limit may be further reduced to 100 ppm, unless the

Commission determines that it is not technologically feasible to have this lower limit. Paint, coatings or electroplating may not be considered a barrier that would make the lead content of a product inaccessible to a child.

(b) Section 101(b)(4) of the CPSIA provides that if the Commission determines that it is not technologically feasible for certain electronic devices to comply with the lead limits, the Commission must issue requirements by regulation to eliminate or minimize the potential for exposure to and accessibility of lead in such electronic devices and establish a compliance schedule unless the Commission determines that full compliance is not technologically feasible.

(c) Lead-containing component parts in electronic devices unable to meet the lead limits set forth in section (a) due to technological feasibility are granted exemptions published in the Annex to the European Union Directive 2002/95/EC, as amended through European Union Commission Decision of January 24, 2008, provided that the exemption is based on a functional requirement both for the use of a lead-containing component and for the use of lead in such component, and does not include the crystal glass exemption and any other exemption for decorative or non-functional uses of lead.

(d) Components of electronic devices that are removable or replaceable such as battery packs and light bulbs that are inaccessible when the product is assembled in functional form or are otherwise granted an exemption published in the Annex of European Union Directive 2002/95/EC are not subject to the lead limits in section (a).

(e) Commission staff is directed to reevaluate and report to the Commission on the technological feasibility of compliance with the lead limits in section (a) no less than five years after publication of a final rule in the **Federal Register** on electronic devices.

Dated: January 9, 2009.

Todd A. Stevenson,

Secretary, Consumer Product Safety Commission.

[FR Doc. E9–716 Filed 1–14–09; 8:45 am]

BILLING CODE 6335–01–P

CONSUMER PRODUCT SAFETY COMMISSION

16 CFR Part 1500

Children's Products Containing Lead; Interpretative Rule on Inaccessible Component Parts

AGENCY: Consumer Product Safety Commission.

ACTION: Proposed interpretative rule.

SUMMARY: On August 14, 2008, Congress enacted the Consumer Product Safety Improvement Act of 2008 (CPSIA), Public Law 110–314, 122 Stat. 3016. Section 101(a) of the CPSIA provides for specific lead limits in children's products. Section 101(b)(2) of the CPSIA provides that the lead limits will not apply to any component part of a children's product that is not accessible to a child through normal and reasonably foreseeable use and abuse. Section 101(b)(2)(B) of the CPSIA further directs the Commission to promulgate by August 14, 2009, a rule providing guidance with respect to what product components or classes of components will be considered to be inaccessible. In this document, the Commission is proposing an interpretative rule providing guidance on inaccessible component parts.

DATES: Written comments and submissions in response to this notice must be received by February 17, 2009.

FOR FURTHER INFORMATION CONTACT: Comments should be e-mailed to *Sec101InaccessibleRule@cpsc.gov*. Comments should be captioned ''Section 101 Inaccessible Component Parts.'' Comments may also be mailed, preferably in five copies, to the Office of the Secretary, Consumer Product Safety Commission, Room 502, 4330 East West Highway, Bethesda, Maryland 20814, or delivered to the same address (telephone (301) 504–7923). Comments also may be filed by facsimile to (301) 504–0127.

SUPPLEMENTARY INFORMATION:

A. Background

The CPSIA provides for specific lead limits in children's products. Section 101(a) of the CPSIA provides that by February 10, 2009, products designed or intended primarily for children 12 and younger may not contain more than 600 parts per million (ppm) of lead. After August 14, 2009, products designed or intended primarily for children 12 and younger cannot contain more than 300 ppm of lead. On August 14, 2011, the limit may be further reduced to 100 ppm, unless the Commission determines that it is not technologically feasible to have this lower limit. A children's product is defined as a consumer product designed or intended primarily for children 12 years of age or younger under section 235(a) of the CPSIA (to be codified at section 3(a)(2) of the Consumer Product Safety Act). In determining whether a consumer product is primarily intended for a child 12 years of age or younger, the following factors will be considered:

- A statement by the manufacturer about the intended use of such product, including a label on such product if such statement is reasonable.
- Whether the product is represented in its packaging, display, promotion or advertising as appropriate for use by children 12 years of age or younger.
- Whether the product is commonly recognized by consumers as being intended for use by a child 12 years of age or younger.
- The Age Determination Guidelines issued by the Commission in September 2002, and any successor to such guidelines.

Section 101(b)(2) of the CPSIA provides that the lead limits do not apply to component parts of a product that are not accessible to a child. This section specifies that a component part is not accessible if it is not physically exposed by reason of a sealed covering or casing and does not become physically exposed through reasonably foreseeable use and abuse of the product including swallowing, mouthing, breaking, or other children's activities, and the aging of the product, as determined by the Commission. Paint, coatings, or electroplating may not be considered to be a barrier that would render lead in the substrate to be inaccessible to a child. Section 101(b)(2)(B) further provides that the Commission must promulgate a rule providing guidance with respect to what product components or classes of components will be considered to be inaccessible.

To the extent a component part is inaccessible to a child, that component part would be relieved from the testing requirement of section 102 of the CPSIA for purposes of supporting the required certification. Of course even where a component part has been so relieved of the testing requirement, other component parts that are accessible must still meet the statutory lead level requirements, and would be subject to the testing requirement of section 102. The Commission will obtain and test products in the marketplace to assure that this remains the case and will take appropriate enforcement action in situations where the limits are exceeded in accessible parts.

In addition, if the Commission determines that it is not technologically feasible for certain electronic devices to fully comply with the lead limits, section 101(b)(4) of the CPSIA provides that the Commission will issue requirements by regulation to eliminate or minimize the potential for exposure to and accessibility of lead in such electronic devices. A notice of proposed rulemaking on electronic devices is published elsewhere in this **Federal Register**.

On September 26, 2008, the Commission staff requested comments on the CPSC Web site on section 101(b)(2), Exception for Inaccessible Component Parts, and section 101(b)(4), Certain Electronic Devices. In particular, the staff requested comments and information on the identification of any component part of any children's product that currently contains lead in any concentration; whether any children's product currently on the market contains lead-containing component parts that are inaccessible, and the reasons why such component parts are considered inaccessible; and whether test methods or processes exist that are used or may be used to assess the accessibility by children of component parts of products. Comments were due on October 31, 2009. The proposed interpretative rule provides guidance for determining whether lead-containing components of children's products are not accessible to children.

B. Comments

Seventeen comments addressed issues related to accessibility or inaccessibility of lead-containing component parts of children's products, including methods for evaluating accessibility. Three comments discussed fully enclosed parts that should be deemed inaccessible. Four comments asserted that accessibility should refer to exposure to lead, *e.g.,* leaching of lead from the product, not physical accessibility. Two comments suggested that only materials that physically degrade or break down should be considered as resulting in accessibility. Fourteen comments stated that accessible parts should be only those that are ingestible, and refer to testing for small parts. Seven comments stated that the use of tools should not be considered in evaluating accessibility.

The CPSIA defines accessibility as physical exposure to lead-containing component parts. Based on staff's review, the Commission preliminarily determines that an accessible component part of a children's product is one that a child may touch, and an inaccessible component part is one that is located inside the product that a child cannot touch. The Commission preliminarily accepts staff's recommendation to assess inaccessibility through the use of accessibility probes and use and abuse testing.

Further, based on staff's review, the Commission preliminarily determines that an accessible component part includes a part that a child may touch or place in the mouth, not just a component part that a child might ingest, since exposure to lead may occur during direct mouthing of an object or mouthing of fingers/hands. In addition, a definition of accessibility that refers solely to exposure to lead, e.g., resulting from leaching of lead from a part, or degradation of a material, is not consistent with the definition of accessibility provided in the CPSIA. The Commission also preliminarily finds that the intentional disassembly of products by children through the use of tools should not be considered in evaluating products for accessibility of lead-containing components.

Several comments suggested that the accessibility probes defined in the CPSC's regulations for evaluating accessibility of sharp points or sharp metal or glass edges could be used to evaluate accessibility of lead-containing components. The Commission preliminarily finds that these accessibility probes could be used to determine whether a lead-containing component part of a product is accessible to a child.

Three comments suggested that use and abuse tests could be used to assess whether a product contains ingestible small parts. The Commission preliminarily finds that appropriate use and abuse tests as defined in current CPSC regulations could be part of an evaluation of whether certain component parts of a product become accessible to a child during normal and reasonably foreseeable use and abuse of the product by a child. However, accessibility does not refer only to ingestion of lead-containing components. Rather, the definition of accessibility provided in the CPSIA is physical contact with lead-containing component parts, and the Commission preliminarily finds that this includes touching, placing in the mouth, or ingestion of a part of a product.

C. Proposed Guidance for Inaccessible Component Parts

A component part of a product that contains lead at a level that exceeds the lead limits specified in the CPSIA may be excluded from compliance with the specified limits if the part is not accessible to a child. The CPSIA specifies that accessibility is defined as physical contact with lead-containing component parts.

Thus, the Commission accepts the staff's recommendation to consider that an accessible component part of a children's product is one that a child may touch, and an inaccessible component part is one that is located inside the product and not capable of being touched by child, whether or not such part is visible to a user of the product. While an inaccessible part may be enclosed in any type of material, *e.g.*, hard or soft plastic, rubber or metal, the CPSIA prohibits the use of surface treatments on a lead-containing component part in the form of paint, coatings, or electroplating as a barrier that would render lead in the substrate to be inaccessible to a child. The Commission seeks comments on whether fabric coverings could be used as a barrier that would make lead within the product inaccessible to a child.

Since a lead-containing component part may be inside a product and not actually fully enclosed by another part of the product, children may have opportunities to contact lead-containing component parts; *e.g.*, they might touch a part with their fingers or tongues. The Commission's proposed approach to addressing section 101(b)(2) is to describe means to test accessibility of potentially lead-containing component parts through evaluation of whether children might touch a lead-containing part.

Currently the Commission's regulations provide that sharp points and sharp metal or glass edges on toys or other articles intended for use by children under age eight years present a potential risk of injury. 16 CFR 1500.48 and 1500.49 provide specific technical requirements for determining accessibility of sharp points or edges through use of accessibility probes specified in these regulations. Both provisions require that a test of accessibility of sharp points or edges shall be applied both before and after use and abuse tests specified in 16 CFR sections 1500.50 through 1500.53. As defined in 16 CFR 1500.48 and 1500.49, an accessible sharp point or edge is present in the product if the result of the test is that any part of the specified portion of the accessibility probe contacts the sharp part.

The ASTM F963 Standard Consumer Safety Specification for Toy Safety (ASTM F963 standard) also includes requirements for accessible sharp points and sharp edges through references to the definitions at 16 CFR 1500.48 and 1500.49. As with the corresponding

regulations, the ASTM F963 standard indicates that accessibility is to be determined both before and after use and abuse tests.

The Commission proposes that the accessibility probes specified for determining accessibility of sharp points or edges be designated as appropriate for determining whether a lead-component part of a product is accessible to a child. An accessible lead-containing component part would be defined as one that contacts any portion of the specified segment of the accessibility probe. An inaccessible lead-containing component part would be defined as one that cannot be contacted by any portion of the specified segment of the accessibility probe. Under the provisions of the CPSIA, a lead-containing component part is not subject to the lead limits if it is not accessible to a child.

1. Description of Accessibility Probes

16 CFR sections 1500.48 and 1500.49 provide identical technical requirements for two accessibility probes applicable to two categories of children's products, based on the age of the intended consumer. A detailed drawing of the probes is reproduced below as Figure 1.

The two probes differ by size for use with products intended for children aged three years or less (Probe A) or for children up to eight years (Probe B). The probe section of the test fixture is a jointed, three-segment cylindrical piece (the part of the probe on the right side of the illustration in Figure 1) attached to a larger collared section. Under 16 CFR 1500.48, for example, an accessible point is one that can be contacted by any portion forward of the collar. For children aged three years and younger, the probe section is 0.220 inches in diameter with each of the three sections 0.577 inches in length, for a total length of 1.731 inches.

Figure 1. Reproduction of Figure 2 from 16 CFR § 1500.48.

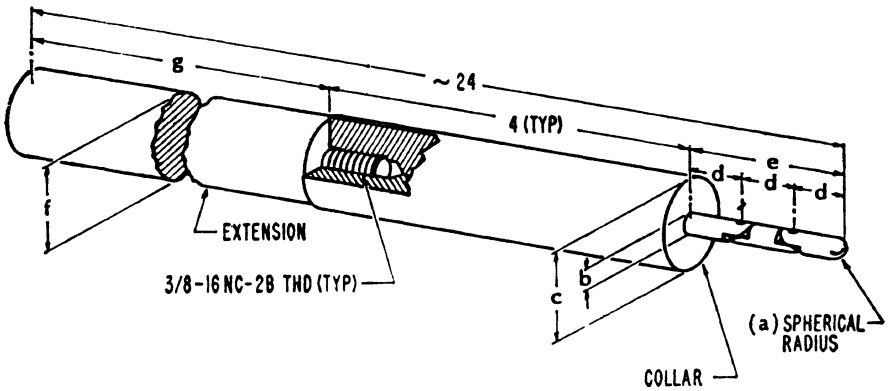

		a	b	c	d	e	f	g
(CHILDREN 0-36 MONTHS INCL)	PROBE A	.110	.220	1.020	.577	1.731	1	18 9/32
(" 37-96 " ")	PROBE B	.170	.340	1.510	.760	2.280	1 1/2	17 25/32

ALL DIMENSIONS IN INCHES

2. Use and Abuse Tests

16 CFR 1500.50 through 1500.53 (excluding the bite tests of 1500.51(c) and 1500.52(c)) provide specific test methods for simulating normal use of toys and other articles intended for use by children as well as the reasonably foreseeable damage or abuse to which the articles may be subjected. The test methods are for use in exposing potential hazards that would result from the normal use or the reasonably foreseeable damage or abuse of such articles intended for children.

The first of these four sections (16 CFR sections 1500.50) describes the objective, general application of the tests, and definitions; the next three sections detail the test methods for articles intended for specified age groups of children: 18 months of age or less, over 18 months but not over 36 months of age, and over 36 months but not over 96 months of age. Products for each of the age groups may be subject to up to five different tests (impact test, flexure test, torque test, tension test, and compression test) depending on the specifications of the regulations and the characteristics of the product.[1]

The Commission preliminarily concludes that these use and abuse tests are appropriate for evaluating whether lead-containing component parts of a product become accessible to a child during normal and reasonably foreseeable use and abuse of the product by a child, since the stated purpose of the tests is to simulate use and damage or abuse of a product by children and to expose potential hazards that might result from use and abuse. However, the Commission is interested in obtaining comment on the effect, if any, of product aging on the use and abuse evaluation.

[1] The staff's toy testing manual, which is on the Commission's Web site at *http://www.cpsc.gov/BUSINFO/testtoys.pdf*, explains in greater detail the sharp point accessibility test and the use and abuse testing currently conducted by Commission staff.

3. Testing Products for Children Aged 12 Years and Under

The existing testing paradigms for accessibility of sharp points and edges are intended for products for use by children in designated age groups up to age eight years. The Commission preliminarily concludes that the application of the current accessibility tests is sufficient for products intended for children older than age eight years, given that the accessibility probes are designed to test whether children's relatively small fingers might enter small holes, gaps, or recesses where they could physically contact certain components, and considering that older children's larger fingers would likely have more limited access to such small holes, gaps, or recesses.

Use and abuse testing is also designated for products for children up to age eight years. While the Commission recognizes that as children age they gain strength and dexterity and participate in a greater range of

activities that could lead to inaccessible components eventually becoming accessible, older children (ages 9 through 12 years) also gain cognitive skills and knowledge that they use to care for and appropriately use their toys and other articles. The Commission preliminarily determines, therefore, that applying the use and abuse tests described for products for children up to age eight years to products for children through age 12 years will appropriately reveal inherent characteristics or possible defects in products that could result in accessibility of components.

Further, the Commission recognizes that as children 12 years of age or younger grow and mature, they become, in many respects, indistinguishable from children older than 12 years, and even adults. Consequently, the Commission preliminary determines that intentional disassembly or destruction of products by children older than age 8 years by means or knowledge not generally available to younger children should not be considered in evaluating products for accessibility of lead-containing components. For example, accessibility arising from the use of tools, such as a screwdriver, should not be considered in accessibility and use and abuse testing.

On the other hand, testing of products should consider the normal and expected children's interactions with products. For example, children may be expected to operate zippers or snaps, open unsealed and unsecured compartments, or remove unsecured covers. Products with such features should be evaluated for accessibility in all the intended and likely configurations of the product during use by children.

D. Effective Date

The Commission was directed by the CPSIA to promulgate a rule providing guidance on inaccessible component parts by August 14, 2009. Although interpretative rules do not require a particular effective date under the Administrative Procedure Act, 5 U.S.C. 553(d)(2), the Commission recognizes the need for providing the guidance expeditiously. Accordingly, the proposed interpretative rule would take effect upon publication of a final interpretative rule in the **Federal Register**.

E. Request for Comments

Interested persons are invited to submit comment on the proposed rule. Comments should be e-mailed to *Sec101InaccessibleRule@cpsc.gov*. Comments should be captioned ''Section 101 Inaccessible Component Parts.'' Comments may also be mailed, preferably in five copies, to the Office of the Secretary, Consumer Product Safety Commission, Room 502, 4330 East West Highway, Bethesda, Maryland 20814, or delivered to the same address (telephone (301) 504–7923). Comments also may be filed by facsimile to (301) 504–0127.

F. List of Relevant Documents

Memorandum from Kristina M. Hatlelid, Ph.D., M.P.H., Toxicologist, Directorate for Health Sciences ''Consumer Product Safety Improvement Act of 2008 (CPSIA) Exclusions and Exemptions from Compliance with Limits for Lead: Inaccessibility and Certain Electronic Devices.'' December 2008.

List of Subjects in 16 CFR Part 1500

Consumer protection, Hazardous materials, Hazardous substances, Imports, Infants and children, Labeling, Law enforcement, and Toys.

G. Conclusion

For the reasons stated above, the Commission amends Title 16 of the Code of Federal Regulations as follows:

PART 1500—HAZARDOUS SUBSTANCES AND ARTICLES: ADMINISTRATION AND ENFORCEMENT REGULATIONS

1. The authority for part 1500 is amended to read as follows:

Authority: 15 U.S.C. 1261–1278, 122 Stat. 3016.

2. Add a new § 1500.87 to read as follows:

§ 1500.87 Children's Products Containing Lead: Inaccessible Component Parts.

(a) The Consumer Product Safety Improvement Act (CPSIA) provides for specific lead limits in children's products. Section 101(a) of the CPSIA provides that by February 10, 2009, products designed or intended primarily for children 12 and younger may not contain more than 600 ppm of lead. After August 14, 2009, products designed or intended primarily for children 12 and younger cannot contain more than 300 ppm of lead. On August 14, 2011, the limit may be further reduced to 100 ppm after three years, unless the Commission determines that it is not technologically feasible to have this lower limit. Paint, coatings or electroplating may not be considered a barrier that would make the lead content of a product inaccessible to a child.

(b) Section 101(b)(2) of the CPSIA provides that the lead limits do not apply to component parts of a product that are not accessible to a child. This section specifies that a component part is not accessible if it is not physically exposed by reason of a sealed covering or casing and does not become physically exposed through reasonably foreseeable use and abuse of the product including swallowing, mouthing, breaking, or other children's activities, and the aging of the product, as determined by the Commission. Paint, coatings, or electroplating may not be considered to be a barrier that would render lead in the substrate to be inaccessible to a child.

(c) Section 101(b)(2)(B) of the CPSIA directs the Commission to promulgate by August 14, 2009, this interpretative rule to provide guidance with respect to what product components or classes of components will be considered to be inaccessible.

(d) The accessibility probes specified for sharp points or edges under the Commission's regulations at 16 CFR 1500.48–1500.49 will be used to assess the accessibility of lead-component parts of a children's product. A lead-containing component part would be considered accessible if it contacts any portion of the specified segment of the accessibility probe. A lead-containing component part would be considered inaccessible if it cannot be contacted by any portion of the specified segment of the accessibility probe.

(e) The use and abuse tests set forth under the Commission's regulations at 16 CFR 1500.50–1500.53 (excluding the bite tests of 1500.51(c) and 1500.52(c)) will be used to evaluate accessibility of lead-containing component parts of a children's product as a result of normal and reasonably foreseeable use and abuse of the product by children that are 18 months of age or less, over 18 months but not over 36 months of age, and over 36 months but not over 96 months of age.

(f) The use and abuse tests set forth under the Commission's regulations at 16 CFR 1500.50–1500.53 (excluding the bite tests of 1500.51(c) and 1500.52(c)) intended for children aged 37–96 months will be used to evaluate accessibility of lead-containing component parts of a children's product as a result of normal and reasonably foreseeable use and abuse of the product by a child through 12 years of age.

(g) The intentional disassembly or destruction of products by children older than age 8 years by means or knowledge not generally available to younger children, including use of tools, will not be considered in evaluating

products for accessibility of lead-containing components.

Dated: January 9, 2009.

Todd A. Stevenson,

Secretary, Consumer Product Safety Commission.

[FR Doc. E9–717 Filed 1–14–09; 8:45 am]

BILLING CODE 6335–01–P

DEPARTMENT OF ENERGY

Federal Energy Regulatory Commission

18 CFR Part 284

[Docket No. RM09–2–000]

Contract Reporting Requirements of Intrastate Natural Gas Companies

January 7, 2009.

AGENCY: Federal Energy Regulatory Commission, DOE.

ACTION: Notice of Inquiry: extension of comment deadline.

SUMMARY: On November 20, 2008, the Federal Energy Regulatory Commission issued a Notice of Inquiry to consider whether to revise its contract reporting requirements for those natural gas pipelines that fall under the Commission's jurisdiction pursuant to section 311 of the Natural Gas Policy Act of 1978 or section 1(c) of the Natural Gas Act (November 28, 2008, 73 FR 72395). The deadline for filing comments is being extended at the request of the Texas Pipeline Association.

Comment Date: Comments are due on or before February 13, 2009.

ADDRESSES: You may submit comments on the Notice of Inquiry, identified by Docket No. RM09–2–000, by one of the following methods:

- *Agency Web site: http://www.ferc.gov.* Follow instructions for submitting comments via the eFiling link found in the Comment Procedures Section of the preamble.
- *Mail:* Commenters unable to file comments electronically must mail or hand deliver an original and 14 copies of their comments to the Federal Energy Regulatory Commission, Secretary of the Commission, 888 First Street, NE., Washington, DC 20426.

FOR FURTHER INFORMATION CONTACT:

Vince Mareino (Legal Information), Office of the General Counsel, Federal Energy Regulatory Commission, 888 First Street, NE., Washington, DC 20426, (202) 502–6167, *Vince.Mareino@ferc.gov.*

Brian White (Technical Information), Office of Energy Markets Regulation, Federal Energy Regulatory Commission, 888 First Street, NE., Washington, DC 20426, (202) 502–8332, *Brian.White@ferc.gov.*

SUPPLEMENTARY INFORMATION:

Notice of Extension of Time

On December 19, 2008, the Texas Pipeline Association (TPA) filed a motion for an extension of time to file comments in response to the Commission's Notice of Inquiry issued November 20, 2008, in the above-referenced proceeding. *Contract Reporting Requirements of Intrastate Natural Gas Companies,* 125 FERC ¶ 61,190 (2008) (NOI). The motion states that because of the potential impact of the NOI on TPA and its members and because of the press of other business and the intervening holidays, additional time is needed to file responsive comments.

Upon consideration, notice is hereby given that an extension of time for filing comments on the Commission's NOI is granted to and including February 13, 2009, as requested by TPA.

Kimberly D. Bose,

Secretary.

[FR Doc. E9–394 Filed 1–14–09; 8:45 am]

BILLING CODE 6717–01–P

DEPARTMENT OF HEALTH AND HUMAN SERVICES

Food and Drug Administration

21 CFR Part 131

[Docket No. FDA–2000–P–0126] (formerly Docket No. 2000P–0685)

Milk and Cream Products and Yogurt Products; Proposal to Revoke the Standards for Lowfat Yogurt and Nonfat Yogurt and to Amend the Standard for Yogurt

AGENCY: Food and Drug Administration, HHS.

ACTION: Proposed rule.

SUMMARY: The Food and Drug Administration (FDA) is proposing to revoke its regulations on the standards of identity for lowfat yogurt and nonfat yogurt and amend the standard of identity for yogurt in numerous respects. This action is in response, in part, to a citizen petition submitted by the National Yogurt Association (the NYA). FDA tentatively concludes that this action will promote honesty and fair dealing in the interest of consumers and, to the extent practicable, will achieve consistency with existing international standards of identity for yogurt.

DATES: Submit comments by March 31, 2009.

ADDRESSES: You may submit comments, identified by Docket No. FDA–2000–P–0126, by any of the following methods:

Electronic Submissions

Submit electronic comments in the following ways:

- Federal eRulemaking Portal: *http://www.regulations.gov*. Follow the instructions for submitting comments.

Written Submissions

Submit written submissions in the following ways:

- FAX: 301–827–6870.
- Mail/Hand delivery/Courier (for paper, disk, or CD–ROM submissions): Division of Dockets Management (HFA–305), Food and Drug Administration, 5630 Fishers Lane, rm. 1061, Rockville, MD 20852.

To ensure more timely processing of comments, FDA is no longer accepting comments submitted to the agency by e-mail. FDA encourages you to continue to submit electronic comments by using the Federal eRulemaking Portal, as described previously, in the **ADDRESSES** portion of this document under *Electronic Submissions*.

Instructions: All submissions received must include the agency name and docket number for this rulemaking. All comments received may be posted without change to *http://www.regulations.gov*, including any personal information provided. For additional information on submitting comments, see the ''Comments'' heading of the **SUPPLEMENTARY INFORMATION** section of this document.

Docket: For access to the docket to read background documents or comments received, go to *http://www.regulations.gov* and insert the docket number, found in brackets in the heading of this document, into the ''Search'' box and follow the prompts and/or go to the Division of Dockets Management, 5630 Fishers Lane, rm. 1061, Rockville, MD 20852.

FOR FURTHER INFORMATION CONTACT: Ritu Nalubola, Center for Food Safety and Applied Nutrition (HFS–820), Food and Drug Administration, 5100 Paint Branch Pkwy., College Park, MD 20740, 301–436–2371.

SUPPLEMENTARY INFORMATION:

Table of Contents

I. Background
  A. Current Standards of Identity for Yogurt, Lowfat Yogurt, and Nonfat Yogurt
  B. The National Yogurt Association Petition

C. The Advance Notice of Proposed Rulemaking
D. Comments on the ANPRM
II. The Proposal
A. Legal Authority/Statutory Directive
B. Proposed Amendments
1. Yogurt
2. Revocation of the Standards of Identity for Lowfat and Nonfat Yogurts
C. NYA's Recommended Amendments to the Standard of Identity for Cultured Milk
III. Analysis of Economic Impacts
A. Preliminary Regulatory Impact Analysis
B. Initial Regulatory Flexibility Analysis
C. Unfunded Mandates Reform Act of 1995
IV. Federalism
V. Environmental Impact
VI. Paperwork Reduction Act of 1995
VII. Comments
VIII. References

I. Background

A. Current Standards of Identity for Yogurt, Lowfat Yogurt, and Nonfat Yogurt

In the **Federal Register** of January 30, 1981 (46 FR 9924), FDA published a final rule establishing standards of identity for yogurt (§ 131.200 (21 CFR 131.200)), lowfat yogurt (§ 131.203 (21 CFR 131.203)), and nonfat yogurt (§ 131.206 (21 CFR 131.206). Interested persons were given until March 2, 1981, to file objections and request a hearing on the final rule. Twenty-one responses were filed objecting to specific provisions of the final rule and, in most cases, requesting a hearing. In response to those objections that raised genuine and substantial issues of fact that must be resolved through a public hearing, FDA stayed the effective date for provisions regarding certain milk products and eggnog as well as the following: (1) Those provisions of §§ 131.200(c)(1), 131.203(c)(1), and 131.206(c)(1) (redesignated as §§ 131.200(d)(1), 131.203(d)(1), and 131.206(d)(1), respectively) that restricted the type of milk-derived ingredients that may be used to increase the nonfat solids content of cultured milk and yogurts to those listed in these sections; (2) those provisions of §§ 131.200(a), 131.203(a), and 131.206(a) that excluded the use of reconstituted dairy ingredients as basic ingredients in the manufacture of yogurts; (3) those provisions of §§ 131.200(c), 131.203(c), and 131.206(c) (redesignated as §§ 131.200(d), 131.203(d), and 131.206(d), respectively) insofar as they excluded the addition of preservatives to yogurts; (4) those provisions of §§ 131.200(a), 131.203(a), and 131.206(a) that set a minimum titratable acidity of 0.9 percent, expressed as lactic acid; and (5) the provision in § 131.200(a) that the 3.25 percent minimum milkfat level applies to yogurt after the addition of one or more of the optional sources of milk solids not fat listed in § 131.200(c)(1) (redesignated as § 131.200(d)(1)) (47 FR 41519 at 41523, September 21, 1982). To date, due to competing priorities and limited resources, FDA has not held a public hearing to resolve these issues and the effective date for these provisions remains stayed. Therefore, these provisions were never in effect. Consequently, cultured milk and yogurts may deviate from the relevant standards in the previously mentioned respects. For example, although the current standards do not permit the use of certain ingredients such as preservatives or a reconstituted dairy ingredient as a basic ingredient, because of the stayed provisions, FDA has not taken enforcement action against the use of these ingredients in yogurt, lowfat yogurt, or nonfat yogurt. Similarly, yogurt is not required to meet the 0.9 percent minimum titratable acidity requirement in stayed provisions §§ 131.200(a), 131.203(a), and 131.206(a).

B. The National Yogurt Association Petition

The NYA submitted a citizen petition on February 18, 2000 (Docket No. FDA–2000–P–0126 (formerly Docket No. 2000P–0685); hereafter referred to as the petition) requesting that FDA revoke the standards of identity in part 131 (21 CFR part 131) for lowfat yogurt (§ 131.203) and nonfat yogurt (§ 131.206) and amend the standards of identity for yogurt (§ 131.200) and cultured milk (§ 131.112).

In its petition, NYA stated that its recommended standard establishes that yogurt is a food product containing a minimum level of certain live and active cultures; takes into account current industry practices; recognizes the need to allow for use of future technologies; and establishes a clear, consistent, modernized, and flexible yogurt standard that would benefit both industry and consumers. Specifically, NYA recommended a yogurt standard that (1) requires a minimum level of active cultures of 10^7 colony-forming units (CFU) per gram (g); (2) requires an acidity of pH 4.6 or lower; (3) requires a minimum level of total dairy ingredients of 51 percent; (4) provides for pre-culture homogenization and pasteurization; (5) permits the use of reconstituted milk and whey protein concentrate as ''standard dairy ingredients;'' (6) provides for the use of any milk-derived ingredients as optional dairy ingredients; (7) permits the use of safe and suitable sweeteners, emulsifiers, and preservatives; (8) permits the optional use of any safe and suitable ingredients added for nutritional or functional purpose; and (9) makes provisions for lowfat and nonfat yogurts based on total fat content of the food per reference amount customarily consumed (RACC).

In addition, NYA requested that the current standard of identity for cultured milk be amended to ''conform'' to its recommended standard for yogurt. Specifically, NYA recommended that FDA revise the cultured milk standard to (1) provide for the alternate term ''fermented milk;'' (2) require a minimum level of total dairy ingredients of 51 percent; (3) permit the use of reconstituted milk and whey protein concentrate as ''standard dairy ingredients;'' (4) provide for the use of any milk-derived ingredients as ''optional dairy ingredients;'' (5) permit the use of safe and suitable sweeteners, emulsifiers, and preservatives; and (6) permit the use of any safe and suitable ingredients added for nutritional or functional purposes.

NYA pointed out that several provisions of the standards of identity for cultured milk, yogurt, lowfat yogurt, and nonfat yogurt are currently stayed (47 FR 41519) (as discussed in section I.A of this document). NYA contended that these stayed provisions create multiple gaps in the standards for which no guidelines exist and, as a result, the integrity of the food ''yogurt'' is not maintained.

According to NYA, yogurt has been characterized for centuries by its live and active cultures and, thus, a minimum content of live and active cultures is crucial to the yogurt standard of identity to promote honesty and fair dealing in the interest of consumers. NYA noted that consumers identify yogurt with live and active cultures and expect yogurt to contain a significant amount of these cultures when they purchase the product but have no assurance under the current standard that the yogurt will contain such cultures. NYA maintained that its recommended standard recognizes the defining characteristics of yogurt and establishes that yogurt is a product of fermentation of certain characterizing cultures and that the finished food contains a significant quantity of these live and active cultures, consistent with consumer expectations.

NYA also stated that the recommended amendments to the standard for cultured milk would further serve consumer interest. Under its proposed actions, NYA maintained that foods otherwise satisfying the standard of identity for yogurt that do not contain the required level of the characterizing live and active cultures would not be named ''yogurt;'' rather, they would be named ''cultured milk'' or ''fermented milk.'' Consequently, NYA stated, consumers would not be misled into believing that these foods contain a significant amount of live and active cultures.

NYA also maintained that its recommended amendments would ensure that aspects of yogurt labeling, such as the use of nutrient content claims, are consistent with the requirements of the Nutrition Labeling and Education Act of 1990 (NLEA) (Public Law 101–535). NYA stated that its recommended standard maintains the three yogurt types (full fat, lowfat, and nonfat yogurts) so manufacturers can continue to make lowfat and nonfat yogurts without meeting the nutritional equivalence requirement described in § 130.10(b) (21 CFR 130.10(b)). In addition, NYA maintained that its recommended standard would change the milkfat content requirements of lowfat and nonfat yogurts to be consistent with the nutrient content claim requirements for the terms ''low fat'' and ''nonfat'' established under the NLEA and codified in § 101.62(b) (21 CFR 101.62(b)).

Additionally, NYA noted that food technology has advanced and industry practices related to yogurt manufacturing have changed since the yogurt standards have been in place. Consequently, NYA asserted that the current yogurt standards impede the yogurt industry and do not allow manufacturers to implement advances in food technology. NYA stated that its recommended standard establishes a modernized, flexible standard of identity for yogurt that takes into account current industry practices and recognizes the need to allow for use of future technologies.

C. The Advance Notice of Proposed Rulemaking

In the **Federal Register** of July 3, 2003 (68 FR 39873), FDA published an advance notice of proposed rulemaking (ANPRM) consistent with section 701(e)(1) of the Federal Food, Drug, and Cosmetic Act (the act) (21 U.S.C. 371(e)(1)), which directs the Secretary of Health and Human Services (the Secretary) to publish proposals made by petition to amend or repeal a dairy food standard so long as the petition includes reasonable grounds for the action requested, and to provide interested persons with an opportunity to present their views. In the ANPRM, FDA requested comment by October 1, 2003, on whether the actions proposed in the petition would promote honesty and fair dealing in the interest of consumers. In response to a request to allow additional time to comment, FDA reopened the comment period on October 29, 2003 (68 FR 61639). The reopened comment period ended on January 27, 2004.

In the ANPRM, FDA requested data and information concerning the need for, and the appropriateness of, the amendments requested by NYA, including the revocation of the standards for lowfat and nonfat yogurt and the revision of the standards for yogurt and cultured milk. FDA specifically requested comment on several provisions set forth in the petition, including those related to the use of any safe and suitable ingredient added for nutritional or functional purposes, the measurement of acidity of yogurt, the presence of live and active cultures in yogurt, and vitamin A addition to yogurt, and the need to amend the cultured milk standard of identity to conform to NYA's recommended yogurt standard.

FDA pointed out in the ANPRM that NYA recommended a number of changes to the standards of identity for yogurt and cultured milk. First, NYA recommended that FDA permit the use of any safe and suitable ingredient added for nutritional or functional purposes. NYA stated that this provision is necessary to maintain enough flexibility in the standards to permit the use of novel ingredients as they are developed. FDA acknowledged the need for food standards to permit flexibility in food technology so long as that technology does not alter the basic nature or essential characteristics of the food. FDA stated that the existing provisions in § 130.10 already provide for the addition of substances for nutritional purposes to standardized foods. FDA also noted that flexibility in the use of ingredients for functional purposes may be achieved by specifying the ingredients by functional use category, e.g., ''emulsifiers'' or ''preservatives,'' rather than by listing the specific ingredients. FDA asked for comment on the need for any functional ingredient categories, in addition to the ones recommended in the petition, in the manufacture of yogurt.

Second, NYA recommended a maximum pH of 4.6 for yogurt, stating that this level reflects the lower end of titratable acidity levels found in common industry practice and that measuring pH, rather than titratable acidity expressed as lactic acid, reflects the current industry practice and is a more accurate and convenient method of measuring acidity. FDA asked for comment both on the maximum pH recommended by NYA and the use of pH rather than titratable acidity to measure the acidity of yogurt.

Third, NYA recommended that FDA require a specific amount of live and active cultures in yogurt based on an assertion that consumers expect yogurt to contain significant amounts of live and active cultures. In its recommended new yogurt standard, NYA required yogurt to contain a minimum of 10^7 CFU/g of live and active cultures at the time of manufacture. NYA also suggested that manufacturers may test their yogurt products to demonstrate that the products, under proper distribution and storage conditions, would be expected to contain at least 10^6 CFU/g of live and active cultures through the manufacturer's designated code life for the product and at the anticipated time of consumption. FDA asked for comment on the following topics: (1) Whether the presence of live and active cultures is an essential characteristic of yogurt and, if so, in what amounts; (2) the appropriateness of NYA's suggested provision that manufacturers ''may'' conduct tests to ensure the presence of live and active cultures through the assigned code life for the product; and (3) whether NYA's recommended standard of identity for yogurt would adequately ensure the presence of appropriate amounts of live and active cultures in yogurt throughout the shelf life of the product and at the point of purchase or consumption. FDA also asked whether any alternative provisions may be needed to fulfill this requirement.

In addition, FDA sought comment on vitamin A addition to lowfat and nonfat yogurt. FDA previously proposed to revoke a number of lowfat and nonfat standards, i.e., §§ 131.122 (sweetened condensed skimmed milk), 131.123 (lowfat dry milk), 131.132 (evaporated skimmed milk), 131.135 (lowfat milk), 131.136 (acidified lowfat milk), 131.138 (cultured lowfat milk), 131.143 (skim milk), 131.144 (acidified skim milk), 131.146 (cultured skim milk), 131.185 (sour half-and-half), 131.187 (acidified sour half-and-half), 131.203 (lowfat yogurt), 131.206 (nonfat yogurt), and 133.131 (lowfat cottage cheese) to ensure that the use of nutrient content claims in the labeling of these products would be consistent with the provisions of the NLEA (60 FR 56541, November 9, 1995). FDA revoked all of the previously

mentioned standards except for lowfat yogurt and nonfat yogurt on November 20, 1996 (61 FR 58991). FDA delayed final action on its proposal to revoke these standards for 120 days because of the technical difficulties and economic considerations associated with their revocation (61 FR 58991 at 58999). FDA acknowledged that, if the standards for lowfat and nonfat yogurts were revoked, modifying the standardized food yogurt to make the nutrient content claims ''lowfat'' or ''nonfat'' under the provisions of § 130.10 would require vitamin A addition to make the product nutritionally equivalent to full fat yogurt. FDA also acknowledged that such a vitamin addition requirement could potentially result in significant relabeling, reformulation, and equipment costs to manufacturers. The agency believed that its decision to defer, for a limited time, action on the standards of identity for yogurt products would provide an appropriate balance between the problem the industry was facing and consumers' interest in consistently and fairly labeled foods. FDA also advised of its intention at the end of the 120-day period to move to resolve the inconsistencies between the use of the terms ''lowfat'' and ''nonfat'' in the names of standardized yogurt and the definitions for these terms established under the nutrient content claims regulations (61 FR 58991 at 58999). As FDA noted in the ANPRM, this issue is yet to be resolved. In fact, the 1995 proposed rule to revoke the lowfat and nonfat yogurt products was subsequently withdrawn (69 FR 68831, November 26, 2004) as part of the agency initiative to withdraw certain proposed actions that were over 5 years old and no longer considered viable candidates for final action at that time. This action was taken to reduce the agency's regulatory backlog and focus its resources on public health issues current at that time.

According to the yogurt standard recommended by NYA, manufacturers would continue to be able to make lowfat and nonfat yogurts without having to meet the nutritional equivalence requirement. FDA asked whether the yogurt industry is better able and equipped to meet the nutritional equivalence requirements of § 130.10 than it was in 1996, when FDA deferred action on this issue. FDA also asked for comment on the need and appropriateness of continuing to exempt yogurt, unlike other standardized foods making low fat and nonfat nutrient content claims, from the nutritional equivalence requirement.

Finally, NYA recommended that FDA revise the current standard of identity for cultured milk (§ 131.112) so that if the food otherwise meets the yogurt standard but does not contain the characterizing cultures at the required levels, then the food would qualify as cultured milk or could alternatively be named ''fermented milk.'' FDA pointed out in the ANPRM that the standard of identity for cultured milk has been in place for several decades and, in light of consumer experience with cultured milk, the agency asked for comment on the need to amend the standard for cultured milk and the appropriateness of the amendments requested by NYA.

D. Comments on the ANPRM

In response to the ANPRM, FDA received a total of 65 responses, each containing one or more comments, from industry, trade associations, consumers, government, and academia. Overall, comments from industry broadly supported the need to modernize the yogurt standards to allow recent technological advances in food processing and to incorporate flexibility in yogurt manufacturing while preserving the basic nature and essential characteristics of yogurt. One milk producers' association opposed revising the current yogurt or cultured milk standards, while several consumers expressed concerns on different provisions recommended by NYA.

Comments from industry strongly supported the establishment of a single yogurt standard that provides for varying levels of fat content and that reflects today's manufacturing practices while taking into account the stayed provisions of the current yogurt standards. These comments also expressed broad support of NYA's petition to the extent that the amended standard would expressly permit those industry practices that are not now restricted under the stayed provisions of the current standard. For example, some comments stated that, since certain provisions of the current yogurt standards were stayed, virtually all domestically-produced yogurt utilizes reconstituted dairy ingredients as basic ingredients and, therefore, these comments recommended that the modernized yogurt standard account for this typical industry practice. Similarly, the comments stated that, since certain other provisions were stayed, a wide range of milk-derived ingredients that provide a technical or functional purpose are used as optional ingredients in the manufacture of yogurt, and several comments from industry supported NYA's recommended amendment that would permit this practice. There was also broad support to amend the standards to bring the fat content of lowfat and nonfat yogurts in line with the provisions of the NLEA.

While in agreement with NYA that the yogurt standards need to be modernized, some other comments opposed some of the amendments sought by NYA. For example, NYA recommended that yogurt contain a specific amount of live and active cultures. Some comments from industry and academia supported this requirement and noted the health benefits associated with live and active cultures in yogurt. However, other industry comments strongly opposed requiring that yogurt contain live and active cultures. These comments did not agree with NYA that live and active cultures are an essential characteristic of ''yogurt'' nor did they agree with NYA that consumers expect a minimum live and active culture content of 10^6 CFU/g or any other specified amount. These comments pointed out that NYA neither presented any evidence to support its contention that consumers expect a certain specified amount of live and active cultures in yogurt nor provided a technical rationale or criteria to evaluate whether the proposed 10^6 CFU/g is the appropriate level. In addition, one major trade association noted in its comments that members of its organization were unable to reach an agreement on whether the presence of live and active cultures is an essential characteristic of yogurt and whether the amount of cultures recommended by NYA is the appropriate level.

Similarly, comments to other provisions that NYA requested in its petition also were mixed. NYA's recommended revisions to the standards would not permit heat treatment of yogurt after culturing and would require yogurt that is heat-treated after culturing to be named ''cultured milk'' or ''fermented milk'' rather than ''yogurt, heat-treated after culturing'' as is permitted by the current standards. While some comments from the domestic industry supported this provision, others from industry, both domestic and international, and one comment from a foreign government strongly opposed this provision. They stated that processors should be permitted to market heat-treated yogurt, provided that the heat treatment is appropriately declared on the label, as is the current practice, and that changing the name of this food now to ''cultured milk'' or ''fermented milk'' would be confusing to consumers.

With respect to NYA's recommended provision that would permit yogurt to contain non-nutritive sweeteners and be labeled simply ''yogurt'' without a specific declaration of the non-nutritive

sweetener in the name of the food, comments were varied. While comments from industry supported this provision, several consumers and at least one State government agency strongly opposed this provision, stating that consumers have become accustomed to identification of aspartame in the name of the food [1] and that removal of this identification would be misleading to consumers and could prove harmful to those individuals with phenylketonuria.

Several consumers, dairy farmers, and milk producers, and one State government agency strongly opposed NYA's recommended provisions that any milk-derived ingredient should be permitted as an optional ingredient and that any safe and suitable ingredient should be permitted for a nutritional or functional purpose. These comments cited concerns including the use of imported, cheaper, and inferior quality substances, which would adversely affect the quality of the yogurt; the potential health risks associated with unregulated, imported products; and the unfair economic disadvantage to U.S. dairy plants.

Comments were varied on the use of whey protein concentrate as a basic ingredient and the minimum amount of dairy ingredients by weight of yogurt. Most comments from industry supported the use of whey protein concentrate as a basic ingredient but other comments, primarily from consumers and dairy farmers, opposed this provision, citing product quality concerns. With respect to NYA's recommended provision that yogurt contain a minimum of 51 percent dairy ingredients by weight of yogurt, comments from an industry group supported the provision, but other comments from consumers expressed concern that this provision could allow yogurt to contain up to 49 percent non-dairy ingredients and still be characterized as ''yogurt.'' The existing standards for yogurt, lowfat yogurt, and nonfat yogurt do not include requirements with respect to the proportion of dairy ingredients in the finished food. Rather, the standards restrict the use of non-dairy ingredients to a limited and specific list of substances that fulfill a technical or functional purpose.

[1] Specifically concerning the labeling of lowfat and nonfat yogurts that are sweetened with aspartame, the agency previously advised that provided the lowfat and nonfat yogurt products conform to the relevant standards of identity prior to the addition of aspartame, the descriptors ''lowfat (or nonfat) yogurt with aspartame sweetener'' and ''lowfat (or nonfat) yogurt sweetened with aspartame'' are acceptable statements of identity for these products (Ref. 1).

With respect to NYA's recommended amendments to the cultured milk standard, a few comments supported, while several other comments from industry (both domestic and international) and milk producers opposed NYA's recommended provisions. The comments that opposed the amendments stated that it would not be appropriate to amend the cultured milk standard simply to include products that do not fit into the NYA's recommended yogurt standard and that have never been considered by the industry or consumers to be cultured milk. Some of these comments also noted that NYA's petition did not address the consumer confusion that might occur from including semisolid yogurt-type products (that otherwise meet NYA's recommended yogurt standard but do not contain the characterizing cultures at the specified levels) in the cultured milk standard, which has long been associated with fluid products. A major trade association also noted that its members could not reach agreement on this issue. Specific comments will be discussed in the proposed amendment section where appropriate.

II. The Proposal

A. Legal Authority/Statutory Directive

Section 401 of the act (21 U.S.C. 341) directs the Secretary to issue regulations fixing and establishing for any food a reasonable definition and standard of identity, quality, or fill of container whenever in the judgment of the Secretary such action will promote honesty and fair dealing in the interest of consumers. Under section 701(e) of the act, any action for the amendment or repeal of any definition and standard of identity under section 401 of the act for any dairy product (e.g., yogurt) shall be begun by a proposal made either by the Secretary on his own initiative or by petition of any interested persons, showing reasonable grounds therefor, filed with the Secretary.

B. Proposed Amendments

Based on all available information, including the information presented in the petition and the comments to the ANPRM, FDA is proposing to amend the yogurt standard and revoke the lowfat and nonfat yogurt standards to promote honesty and fair dealing in the interest of consumers. This proposal is also consistent with FDA's proposed general principles for modernizing food standards (70 FR 29214, May 20, 2005). In addition, consistent with 21 CFR 130.6, which states that food standards adopted by the Codex Alimentarius Commission will be reviewed by FDA (and either will be accepted, with or without change, or will not be accepted), FDA reviewed the Codex Standard for Fermented Milks (CODEX STAN 243–2003) (herein after referred to as the Codex Standard) (Ref. 2), which encompasses the standard for ''yoghurt'' and provides that yoghurt may be spelled as appropriate in the country of retail sale. FDA reviewed the Codex Standard to harmonize, to the extent feasible, the proposed amendments with Codex provisions for ''yoghurt,'' while preserving the integrity, quality, and economic value that U.S. consumers expect of yogurt.

FDA tentatively concludes that the proposed amendments are necessary to modernize the current yogurt standard to permit flexibility and provide for technological advances in yogurt production, while preserving the basic nature and essential characteristics of yogurt consistent with consumer expectations and thus protecting consumer interest. FDA considered the different amendments recommended by NYA and tentatively concluded that some of NYA's recommended amendments are not consistent with the basic nature and essential characteristics of yogurt or cultured milk. Each of the amendments recommended by NYA and FDA's tentative conclusions are discussed here.

1. Yogurt

a. *Milkfat and milk solids not fat content of yogurt*. The current standard of identity for yogurt requires a minimum milkfat content of 3.25 percent and a minimum milk solids not fat content of 8.25 percent in yogurt prior to the addition of bulky flavoring ingredients (§ 131.200(a)). In response to an objection to the January 30, 1981, final rule that applying the milkfat minimum to yogurt which has been made to contain milk solids not fat at a level higher than the minimum requirement of the standard will discourage manufacturers from using higher levels of milk solids not fat in yogurt because such addition would then require the use of more milkfat, FDA stayed the requirement that the minimum milkfat level is applied after the addition of optional dairy ingredients. FDA pointed out that the minimum 3.25 percent milkfat and the 8.25 percent milk solids not fat requirements apply prior to the addition of any bulky flavors and that while other optional dairy ingredients may be used to increase the milk solids not fat content of yogurt to above 8.25 percent, the standard does not provide for a

proportionate decrease in the minimum milkfat content. FDA determined that whether the minimum milkfat requirement of 3.25 percent should apply to yogurt before or after the addition of optional dairy ingredients used to increase the milk solids not fat content should be resolved through a public hearing and stayed that requirement pending a public hearing (47 FR 41519 at 41521).

NYA did not recommend a specific total fat content for yogurt. However, NYA requested that any level of fat above the level considered ''low fat'' (per § 101.62(b)(2)) should be permitted in a product named ''yogurt.'' Accordingly, NYA recommended that the total fat content of yogurt should be any level higher than 3.0 g per 225 g. NYA also noted that its recommended provision would measure the fat content on a finished food basis and, therefore, would provide consumers with more accurate information about the yogurt's actual fat content.

Some comments in response to the ANPRM supported retaining the current 3.25 percent minimum milkfat content of yogurt and noted that this level is consistent with the fat content requirement for milk. FDA notes that NYA's recommended minimum fat content of 3.0 g per 225 g would equate to lowering the current minimum milkfat content of 3.25 percent to about 1.3 percent. NYA did not provide adequate justification for this change to the minimum fat content of yogurt. FDA agrees with NYA that it is appropriate to revise the existing lowfat and nonfat yogurt standards of identity to conform these foods with the nutrient content claims requirements for ''low fat'' and ''non fat,'' respectively, as discussed further in section II.B.2 of this document. However, NYA did not provide a justification for lowering the minimum fat content of yogurt that is named simply ''yogurt'' and whose labeling does not bear a claim related to its fat content. Furthermore, the yogurt standard with the minimum 3.25 percent milkfat requirement has been in place for over two decades (although the application of this level after the addition of optional dairy ingredients was stayed) and appears to be used in the manufacture of full-fat yogurts available in the marketplace today. According to the U.S. Department of Agriculture (USDA) National Nutrient Database for Standard Reference, Release 19 (2006), the total fat content of ''yogurt, plain, whole milk'' is 3.25 percent (Ref. 3), consistent with the minimum milkfat requirement of the current standard of identity for yogurt. With respect to the minimum milk solids not fat content of yogurt, neither NYA nor comments in response to the ANPRM requested a revision to the current requirement of 8.25 percent. In addition, FDA does not have any data or information to suggest that there is a need to reconsider the current requirement of a minimum of 8.25 percent milk solids not fat in yogurt. Therefore, FDA is maintaining the current requirements of a minimum amount of 3.25 percent milkfat and 8.25 percent milk solids not fat in yogurt.

With respect to the measurement of these components in yogurt, NYA requested that the minimum milk solids not fat content of 8.25 percent be derived from basic dairy ingredients and, therefore, that this requirement be applied prior to the addition of any permitted optional ingredients. We agree that the optional dairy ingredients may be used to increase the milk solids not fat levels above the minimum required 8.25 percent, not to meet this minimum level. FDA previously clarified this purpose of the provision in the final rule establishing the current standard that permits optional milk-derived ingredients to increase the nonfat milk solids content (46 FR 9924 at 9927). In addition, as FDA noted in 1982, while § 131.200(a) of the current yogurt standard provides for the use of optional dairy ingredients to increase the milk solids not fat levels above the minimum required 8.25 percent, this provision was not intended to provide nor does it provide for a proportionate decrease in the minimum milkfat content of yogurt (47 FR 41519 at 41521).

FDA also believes that the addition of bulky flavoring ingredients such as fruits and fruit preparations lowers the milkfat and milk solids not fat levels of the resultant flavored yogurt. Therefore, to ensure the quality and compositional characteristics of the finished flavored yogurt, the milkfat and milk solids not fat requirements should apply to the yogurt portion prior to the addition of bulky flavoring ingredients. Comments in response to the ANPRM did not provide any specific comments on this issue. Furthermore, applying the milkfat and milk solids not fat requirements prior to the addition of flavoring ingredients only is consistent with the Codex Standard, which applies milkfat, milk protein, and other compositional criteria to the fermented milk part only, before flavoring ingredients are added.

For these reasons, FDA tentatively concludes that requiring a minimum milkfat content of 3.25 percent and a milk solids not fat content of 8.25 percent in yogurt prior to the addition of any bulky flavoring ingredients would promote honesty and fair dealing in the interest of consumers by ensuring the overall quality and composition of yogurt that may or may not contain added flavoring ingredients. Therefore, FDA is proposing to require in § 131.200(a) that yogurt have a minimum milkfat content of 3.25 percent and a minimum milk solids not fat content of 8.25 percent before the addition of bulky flavoring ingredients. FDA seeks comment on the need for and appropriateness of the following provisions: (1) A minimum milkfat content of 3.25 percent in yogurt, (2) a minimum milk solids not fat content of 8.25 percent, and (3) the application of these two compositional requirements prior to the addition of bulky flavoring ingredients.

b. *Acidity of yogurt.* FDA stayed those portions of the standards of identity for yogurt, lowfat yogurt, and nonfat yogurt (§§ 131.200(a), 131.203(a), and 131.206(a), respectively) that required a minimum titratable acidity of 0.9 percent. These standards also allow an equivalent potentiometric method to be used to determine acidity (i.e., a pH value) in lieu of the Association of Official Analytical Chemists International (AOAC) titration method that is specified in the standards. FDA stayed these provisions in response to an objection to the January 30, 1981, final rule that the required acidity was too high for some consumers' taste and that 0.75 percent is the common industry practice. The agency stated that until such time as this issue is resolved, yogurt, lowfat yogurt, and nonfat yogurt will not be required to meet the 0.9 percent minimum level of titratable acidity (47 FR 41519 at 41522).

NYA requested that yogurt contain a minimum titratable acidity of 0.7 percent prior to the addition of optional ingredients and stated that this level reflects the lower end of titratable acidity commonly used by industry today. This lower acidity level is also supported by comments in response to the ANPRM. NYA also requested that the yogurt standard specify the acidity requirement as a determination of pH rather than titratable acidity because measuring pH reflects current industry practice and is a more accurate and convenient method than measuring titratable acidity. NYA recommended a maximum pH of 4.6. FDA believes that allowing a minimum titratable acidity of 0.7 percent or an equivalent maximum pH of 4.6 is appropriate as it reflects current industry practice and better meets some consumers' taste preferences. FDA believes that providing for the measurement of acidity in yogurt as a determination of

its pH as well as its titratable acidity will introduce flexibility in the yogurt standard. FDA recognizes that each method may pose certain challenges in its application to yogurt. For example, the addition of flavors and colors may interfere with the precise determination of the colorimetric endpoint of titration. By providing for both pH and titratable acidity measurements, the standard gives manufacturers the flexibility to choose a method that best suits their product.

With respect to the application of this acidity requirement, NYA requested that the acidity requirement should apply prior to the addition of any permitted optional ingredients, including dairy ingredients added for technical or functional purposes, microbial cultures, sweeteners, and flavoring ingredients. The stayed provisions that required a minimum titratable acidity would have applied prior to the addition of bulky flavors only. FDA believes that the addition of bulky flavoring ingredients such as fruits and fruit preparations may significantly impact the acidity of the resultant flavored yogurt. Therefore, to ensure the overall quality and sensory characteristics of the finished flavored yogurt, the acidity requirement should apply to the yogurt portion prior to the addition of bulky flavoring ingredients. FDA does not believe that it is appropriate to exclude the other permitted optional ingredients such as safe and suitable cultures and optional dairy ingredients from the point at which acidity is measured, as these ingredients can be important contributors to the culturing process and acidity development of yogurt. In addition, applying the acidity requirement prior to the addition of bulky flavoring ingredients only is consistent with the Codex Standard, which applies the compositional criteria in the case of flavored fermented milks to the fermented milk part only.

For these reasons, FDA tentatively concludes that a minimum titratable acidity of yogurt of 0.7 percent or a maximum pH of 4.6 is appropriate. FDA also tentatively concludes that applying the acidity requirement to yogurt prior to the addition of bulky flavoring ingredients promotes honesty and fair dealing in the interest of consumers by ensuring the overall quality and sensory characteristics of yogurt. Therefore, FDA is proposing to revise § 131.200(a) to require that, before the addition of bulky flavors, yogurts have either a minimum titratable acidity of 0.7 percent or a maximum pH of 4.6. FDA is interested in comments on the appropriateness of the proposed level and measurement of acidity. In the proposed yogurt standard, FDA has also reformatted this paragraph to be clear, simple, and easy to use by both manufacturers and FDA officials that enforce compliance with the standards.

c. *Live and active cultures in yogurt.* The current standards of identity for yogurt, lowfat yogurt, and nonfat yogurt (§§ 131.200, 131.203, and 131.206, respectively) do not require the presence of a specific amount of live and active cultures in yogurt, lowfat yogurt, or nonfat yogurt. NYA recommended that FDA revise the yogurt standards to require a specified amount of live and active cultures and that heat treatment should not be permitted after culturing because it destroys the live and active cultures in yogurt. NYA submitted data obtained from consumer surveys to support its argument that consumers expect ''yogurt'' to contain live and active cultures. While the NYA consumer surveys adequately show that consumers believe that yogurt is a healthful food, FDA does not agree that the data submitted support its argument that consumers are generally aware of the presence of live cultures in yogurt or that they expect yogurt to contain live cultures (Ref. 4).

In the absence of convincing data demonstrating that the presence of live and active cultures is a characteristic that consumers expect in yogurt, FDA does not have a basis to require live and active cultures in yogurt at the time of manufacture or at the retail level. Therefore, FDA is not proposing that yogurt must contain a specified amount of live and active cultures.

However, based on the petitioner's request as well as some comments in response to the ANPRM, there appears to be interest among manufacturers in distinguishing their yogurt products from other yogurt products on the basis of the level of live and active cultures in the food. In the interest of providing a flexible standard that allows for appropriate product diversity and provides for truthful and nonmisleading labeling of yogurt that contains a set amount of live and active cultures, FDA is proposing (1) in § 131.200(a) that yogurt that is not heat-treated may contain a minimum of 10^7 CFU/g of live and active cultures at the time of manufacture of the yogurt with a reasonable expectation that yogurt contains live and active cultures at a level of 10^6 CFU/g at the retail level through the manufacturer's assigned shelf life of the product and (2) in § 131.200(f)(3) to permit an optional labeling statement such as ''contains live and active cultures'' or another appropriate descriptor on such yogurt that is not heat-treated after culturing and that contains the specified amount of live and active cultures.

These levels of live and active cultures are as proposed by the petitioner. The Codex Standard, on the other hand, establishes a minimum amount of microorganisms constituting the starter culture of 10^7 CFU/g of yogurt. FDA seeks comment on the appropriateness of providing for special labeling statements on yogurt products that contain a certain minimum level of live and active cultures and the appropriateness of a minimum level of 10^6 CFU/g throughout the shelf life of the food as the basis for the special labeling statements.

d. *Heat treatment of yogurt after culturing.* The current yogurt standards do permit heat treatment after culturing, provided the phrase ''heat-treated after culturing'' follows the name of the food in the labeling of these products (§§ 131.200(f)(1)(ii), 131.203(f)(1)(iii), and 131.206(f)(1)(ii), respectively). During the adoption of the yogurt standards, FDA reviewed extensively the question of whether the standards should permit heat treatment of the product after the culturing process. FDA acknowledged in its June 10, 1977, proposal that yogurt is a cultured product containing microorganisms but that in some cases, yogurt is heat-treated after culturing to kill these microorganisms and extend the shelf life of the food (42 FR 29919 at 29920, June 10, 1977). FDA also opined that ''except for destroying the microorganisms, these foods retain essentially the same characteristic attributes'' of traditional yogurt and, therefore, proposed to preserve the food ''yogurt'' unqualified in its traditional form that is not heat-treated after culturing and to provide for appropriate labeling ''to inform consumers when yogurt has been heat-treated after culturing'' (42 FR 29919 at 29920). In response to comments to that proposed rule, FDA further advised in a final rule that ''it is in the best interest of both consumers and international trade to permit heat treatment of yogurts and to require auxiliary labeling to inform consumers that the product has been heat-treated'' (46 FR 9924 at 9931).

NYA's consumer survey data do not support the argument that heat treatment following culturing is inconsistent with consumer expectations of a food named ''yogurt.'' FDA has no evidence nor is it aware of any information that suggests that the name ''yogurt,'' when appropriately qualified by the phrase ''heat-treated after culturing,'' is misleading to consumers in that they believe this food

to be ''yogurt'' that is not heat-treated after culturing. Therefore, FDA is not persuaded that heat treatment after culturing should be prohibited by the yogurt standard. Accordingly, FDA is retaining in § 131.200(a) the provision that permits heat treatment of yogurt after culturing to extend the shelf life of the food.

A review of the data that NYA submitted to support its assertion of consumer expectations of live and active cultures as a characteristic of yogurt also provides some information about consumers' understanding of the term ''heat-treated after culturing.'' Although the surveys had several methodological limitations, the data suggest that consumers do not fully understand the meaning of the term ''heat-treated after culturing'' on yogurt products (Ref. 4). However, no further information or reasons for this finding can be ascertained; for example, it is possible that consumers do not relate the heat treatment statement to its impact on specific attributes of the food. If consumers generally do not expect ''yogurt'' to contain live and active cultures, as suggested by NYA's survey data, it is likely that they do not associate the descriptor ''heat-treated after culturing'' with its effect on live and active cultures in the food. With the exception of these initial data, FDA does not have factual information or data that would lead us to conclude at this time that ''heat-treated after culturing'' is not an appropriate accompanying statement for yogurt that is heat-treated after culturing. ''Heat-treated after culturing'' is a truthful statement that accurately and adequately describes the basic identity of the food. Further, FDA provided for the use of this phrase since the time the yogurt standards were adopted in 1981 and some manufacturers appear to be using this descriptor in the labeling of their products. Most consumer comments that FDA received at the time of adoption of these standards expressed approval of the labeling statement ''heat-treated after culturing'' to differentiate between heat-treated and non-heat-treated yogurts (46 FR 9924 at 9931). FDA did not receive any consumer comments in response to the ANPRM that expressed a lack of understanding or other concerns with this descriptor in the labeling of yogurts. Therefore, FDA is maintaining the current descriptor ''heat-treated after culturing'' to accompany the name of the food for yogurt that undergoes heat treatment after the culturing process. However, to enhance consumer understanding of this phrase, provide more meaningful information about the impact of the heat treatment on specific attributes of the food, and distinguish these products from traditional yogurt, FDA advises that manufacturers may consider using additional truthful and nonmisleading statements, such as ''does not contain live and active cultures,'' in the labeling of their heat-treated yogurt products.

e. *Use of reconstituted milk forms as basic dairy ingredients*. The current standards of identity for yogurt, lowfat yogurt, and nonfat yogurt (§§ 131.200, 131.203, and 131.206, respectively) do not provide for the use of reconstituted dairy ingredients as basic dairy ingredients in their manufacture. FDA stayed those portions of §§ 131.200(a), 131.203(a), and 131.206(a)) insofar as they exclude the use of reconstituted dairy ingredients as basic ingredients in the manufacture of yogurts in response to an objection to the January 30, 1981, final rule that yogurt manufacturers in Florida and the Southeastern States will be adversely affected because the fluid milk supplies in these States are often insufficient for use in yogurt manufacture (47 FR 41519 at 41521). FDA also stated that until such time as this issue is resolved, the use of reconstituted dairy ingredients as basic ingredients in the manufacture of yogurt, lowfat yogurt, or nonfat yogurt will not be the basis for regulatory action (47 FR 41519 at 41521).

According to NYA, manufacturers have routinely used reconstituted dairy ingredients in the manufacture of yogurts. Comments in response to the ANPRM also stated that reconstituted dairy ingredients are currently used as basic ingredients in the manufacture of yogurts and recommended that FDA adopt a modernized yogurt standard that permits this typical industry practice. FDA is not aware of any data or other information that would suggest that the use of reconstituted forms of permitted dairy ingredients, i.e., cream, milk, partially skimmed milk, and skim milk, has an adverse effect on yogurt quality or safety. Moreover, FDA's standards currently permit the use of reconstituted forms of dairy ingredients as basic ingredients in the manufacture of other standardized dairy foods, such as cheeses and related cheese products, ice cream, and frozen custard. Seeing no technical or safety concerns, FDA tentatively concludes that it is appropriate to permit reconstituted forms of cream, milk, partially skimmed milk, and skim milk as basic ingredients in the manufacture of yogurt and its lower fat versions. Therefore, FDA is proposing to revise § 131.200 to permit reconstituted forms of cream, milk, partially skimmed milk, and skim milk as basic ingredients by (1) redesignating current § 131.200(c) as proposed § 131.200(b), (2) renaming the heading of newly proposed § 131.200(b) as ''Basic dairy ingredients'' instead of ''Optional dairy ingredients'' because the proposed new nomenclature better describes the proposed provision, and (3) revising newly proposed § 131.200(b) to include the reconstituted versions of the dairy ingredients permitted in current § 131.200(c). FDA seeks comment on the need for and appropriateness of this proposed provision.

f. *Use of safe and suitable milk-derived ingredients as optional dairy ingredients*. Stayed portions of the standards of identity for yogurt, lowfat yogurt, and nonfat yogurt listed the optional milk-derived ingredients (i.e., concentrated skim milk, nonfat dry milk, buttermilk, whey, lactose, lactalbumins, lactoglobulins, and whey modified by partial or complete removal of lactose and/or minerals) that can be used for the purpose of increasing the nonfat solids content of these foods above the minimum required 8.25 percent, provided the ratio of protein to total nonfat solids of the food and the protein efficiency ratio of all protein present is not decreased as a result of adding these optional ingredients (§§ 131.200(c)(1), 131.203(c)(1), and 131.206(c)(1); redesignated as §§ 131.200(d)(1), 131.203(d)(1), and 131.206(d)(1)). FDA stayed these provisions in response to objections to the January 30, 1981, final rule that these provisions preclude the use of other safe, nutritional, and functional milk-derived ingredients and that there appears to be no rational factual basis for the omission of traditional ingredients such as partially delactosed skim milk, partially hydrolyzed whey, and other safe and suitable ingredients (47 FR 41519).

NYA stated that manufacturers currently use a variety of safe and suitable milk-derived ingredients for the purpose of increasing the nonfat solids content of yogurts. FDA is not aware of any data or other information that would suggest that expanding the current list of optional milk-derived ingredients to permit the use of any safe and suitable milk-derived ingredient, under the conditions stated in the current standard to maintain the nutritional quality of yogurt, would have an adverse effect on the overall quality or safety of yogurt. FDA believes that it is appropriate to incorporate technological flexibility into standards so long as the basic nature and essential characteristics of the food are not

adversely affected. Therefore, FDA is proposing to permit the optional use of any safe and suitable milk-derived ingredient as an optional dairy ingredient in the manufacture of yogurt to increase the nonfat solids content of the food above the minimum required 8.25 percent, provided the ratio of protein to total nonfat solids of the food and the protein efficiency ratio of protein present in the food are not decreased as a result of the use of such ingredients. Specifically, FDA is proposing, in new § 131.200(c), ''Optional dairy ingredients,'' to permit other safe and suitable milk-derived ingredients to be used to increase the nonfat solids content of the food, provided the ratio of protein to total nonfat solids of the food and the protein efficiency ratio of protein present in the food are not decreased as a result of the use of such ingredients. FDA seeks comment on the need for and appropriateness of this proposed provision.

g. *Use of safe and suitable cultures in addition to the characterizing bacterial cultures*. The current standards of identity for yogurt, lowfat yogurt, and nonfat yogurt (§§ 131.200, 131.203, and 131.206, respectively) do not prohibit the use of bacterial cultures in addition to the two characterizing lactic acid-producing bacteria, *Lactobacillus bulgaricus* and *Streptococcus thermophilus*. However, the standards do not explicitly state that other bacterial cultures are permitted. NYA requested that FDA revise the yogurt standard to clearly permit the use of other safe and suitable bacterial cultures in addition to the characterizing bacterial cultures. FDA tentatively concludes that explicitly providing for the use of other optional bacterial cultures will enhance the clarity of the yogurt standard. Therefore, FDA is proposing to clarify in new § 131.200(d)(1) that optional safe and suitable cultures may be used only in addition to the required characterizing bacterial cultures specified in the standard.

h. *Use of sweeteners*. The current standards of identity for yogurt, lowfat yogurt, and nonfat yogurt currently provide for the optional use of certain nutritive carbohydrate sweeteners, specifically: Sugar (beet or cane), invert sugar, brown sugar, refiner's syrup, molasses (other than blackstrap), high fructose corn syrup, fructose, fructose syrup, maltose, maltose syrup, dried maltose syrup, malt extract, dried malt extract, malt syrup, dried malt syrup, honey, maple sugar, and any of the sweeteners listed in 21 CFR part 168, except table syrup (§§ 131.200(d)(2), 131.203(d)(2), and 131.206(d)(2), respectively, as redesignated in the September 21, 1982 final rule (47 FR 41519)). The term ''sweetened'' must accompany the name of yogurt, lowfat yogurt, and nonfat yogurt that is sweetened without the addition of characterizing flavor with any one or more of these permitted sweeteners (§§ 131.200(f)(1)(i), 131.203(f)(1)(ii), and 131.206(f)(1)(i), respectively, as redesignated in the September 21, 1982, final rule (47 FR 41519)).

NYA requested that FDA revise the current yogurt standards to permit ''safe and suitable sweeteners'' without specifying a list, as is permitted for ice cream (21 CFR 135.110(a)(1)), with the sweetener being declared in the ingredient statement of the food so that non-nutritive sweeteners may be used in yogurt without a specific declaration of its presence in the name of the food. NYA argued that under current regulations, manufacturers are able to use non-nutritive sweeteners in yogurt that is modified to be eligible to bear a nutrient content claim, for example, ''reduced calorie yogurt,'' without a specific declaration of the presence of the non-nutritive sweetener in the name of the food. Consumer comments to the ANPRM strongly opposed this NYA recommendation and requested that the presence of non-nutritive sweeteners be declared in the name of the food.

The regulatory framework governing the naming of standardized foods that do not fully comply with the relevant standards of identity changed with the passage of the NLEA in 1990 and the subsequent establishment of the agency's requirements for foods named by use of a nutrient content claim and a standardized term (§ 130.10). Specifically, § 130.10(d) permits the addition of safe and suitable ingredients to a standardized food modified to be eligible to bear defined nutrient content claims when these ingredients are needed to, among other things, add sweetness to ensure that the modified food is not inferior in performance characteristic to the standardized food even though these ingredients are not specifically permitted by an individual food standard.

In addition, these non-nutritive sweeteners must only be declared by their common or usual names in the ingredient statement as required by § 101.4(a) (21 CFR 101.4(a)), as their presence in the standardized food is not required to be declared within the name of the food. Therefore, for example, a product named ''light sweetened yogurt'' or ''reduced calorie sweetened yogurt'' may contain non-nutritive sweeteners to add sweetness to the product so that it is not inferior in its sweetness property compared to its standardized counterpart, sweetened yogurt. The provisions of § 130.10 do not require these yogurt products to declare the presence of such non-nutritive sweeteners within the name of these foods. The same is true for other standardized foods modified under § 130.10; for example, ''light ice cream'' and ''reduced calorie sweet chocolate.''

There are, however, certain exceptions where the regulatory framework governing the naming of standardized foods that do not fully comply with the relevant standards of identity was not changed by NLEA or the establishment of § 130.10. For example, a few artificially sweetened foods are governed by standards of identity that establish the phrase ''artificially sweetened'' as a part of the statement of identity of these foods (for example, ''artificially sweetened canned pears'' (see 21 CFR 145.176)). FDA may consider appropriate actions in the future to bring these particular standardized foods in conformity with NLEA. With the exception of these standardized artificially sweetened foods, foods that are made using non-nutritive sweeteners are not required to declare the presence of the non-nutritive sweetener within the name of the food. Per the ingredient labeling requirements of § 101.4(a), the non-nutritive sweetener is declared by its common or usual name in the ingredient statement of the food. Where special labeling requirements are necessary for the safe use of a non-nutritive sweetener, the conditions for including this information on the label and how and where this information is to be presented on the label are established in the relevant food additive regulation(s). For example, labels of foods that contain aspartame are required to bear the statement ''PHENYLKETONURICS: CONTAINS PHENYLALANINE'' either on the principal display panel or on the information panel, in accordance with 21 CFR 172.804. This regulation also requires that the statement shall appear prominently and conspicuously in contrast to other printed matter on the label. Any new sweetening ingredients developed and permitted for use in foods in the future will be required to be labeled in accordance with similar new labeling or other requirements necessary for the safe use of the sweetener.

FDA recognizes that there is considerable interest in the special labeling requirements for artificial sweeteners when used in foods in general. Over the years, FDA has been asked to require the disclosure of

artificial sweeteners on the principal display panel in addition to the ingredient list. The agency considers the safety of artificial sweeteners as part of the food additive review process and has and will continue to establish special labeling or packaging requirements where necessary for the safe use of these ingredients. FDA does not object to manufacturers voluntarily declaring on the principal display panel that the product is artificially sweetened nor does the agency object to truthful and nonmisleading statements to inform consumers of yogurt that is made using non-nutritive sweeteners.

For these reasons, FDA tentatively concludes that providing for the use of any safe and suitable sweetening ingredients, in lieu of the current allowance for certain nutritive carbohydrate sweeteners, introduces flexibility in the manufacture of yogurt without adversely affecting the basic nature and essential characteristics of yogurt. Therefore, FDA is proposing (1) in § 131.200(d)(2) to provide for the use of any safe and suitable sweeteners in yogurt and (2) to revise § 131.200(f)(1)(i) accordingly to replace the term ''nutritive carbohydrate sweetener'' with ''sweetener(s)''. Consumers would be informed of the presence of the sweetening ingredient through its declaration by its common or usual name in the ingredient statement of the yogurt. However, FDA tentatively concludes that there is no basis to require the declaration of a non-nutritive sweetener, when used, as part of the name of yogurt. FDA specifically seeks comment on the appropriateness of this tentative decision. Comments that address FDA's tentative decision should include sound scientific and factual data or information that supports the positions presented in the comments.

i. *Use of stabilizers and emulsifiers*. The current standards of identity for yogurt, lowfat yogurt, and nonfat yogurt provide for the use of stabilizers but do not provide for the use of emulsifiers (§§ 131.200(d)(5), 131.203(d)(5), and 131.206(d)(5), respectively). NYA stated that permitting the use of emulsifiers in addition to stabilizers would provide more opportunities for product development and innovation in the yogurt industry. A few comments in response to the ANPRM supported the use of emulsifiers along with the use of stabilizers, which are currently permitted by the standards. FDA does not have any safety or quality concerns with the use of emulsifiers in yogurt, provided that they are used within good manufacturing practice, where there is a need for the ingredient, and within any limitations specified by relevant FDA food additive or generally recognized as safe substance regulations. For these reasons, FDA has tentatively concluded that providing for the use of emulsifiers in addition to stabilizers permits flexibility in the manufacture of yogurt without adversely affecting the basic nature or essential characteristics of yogurt. Therefore, FDA is proposing to revise § 131.200(d)(5) to permit the use of safe and suitable emulsifiers in addition to the current allowance for the use of stabilizers as optional ingredients in the manufacture of yogurt.

j. *Use of preservatives*. The current standards of identity for yogurt, lowfat yogurt, and nonfat yogurt (§§ 131.200, 131.203, and 131.206, respectively) do not list preservatives as permitted ingredients in the manufacture of yogurt, lowfat yogurt, or nonfat yogurt. FDA stayed those portions of §§ 131.200(c), 131.203(c), and 131.206(c) (redesignated as §§ 131.200(d), 131.203(d), and 131.206(d), respectively) insofar as they exclude the addition of preservatives in response to objections to the January 30, 1981, final rule that preservatives such as potassium sorbate and sorbic acid should be permitted to prohibit the growth of yeasts and molds and to extend the shelf life of the foods (47 FR 41519). FDA stated that until this issue is resolved, the appropriate use of preservatives in these foods would not be the basis for regulatory action (47 FR 41519 at 41522). While NYA stated that the use of preservatives will provide flexibility in the manufacture of yogurt and comments from industry supported their use, stating that preservatives help maintain the product's integrity through shipping and storage, at least one consumer group and some consumers opposed their use, citing product quality concerns. However, these comments did not provide any data to support their position. Nor does FDA have any data that indicate that appropriate use of preservatives, particularly in the case of yogurts that are heat-treated after culturing to have an extended shelf life, has an adverse effect on the quality or characteristics of yogurt. In addition, the Codex Standard permits the use of preservatives in the fermented milks that are heat-treated after fermentation. For these reasons, FDA has tentatively concluded that providing for the optional and appropriate use of preservatives permits flexibility in the manufacture of yogurt without adversely affecting the basic nature or essential characteristics of yogurt. Therefore, FDA is proposing in § 131.200(d)(6) to permit the use of safe and suitable preservatives as optional ingredients in the manufacture of yogurt. FDA seeks comment on the need for and appropriateness of this proposed provision. Specifically, FDA seeks comment on (1) whether it is appropriate to permit the use of safe and suitable preservatives in the manufacture of yogurt and (2) whether such provision should limit the use of preservatives in only those yogurts that are heat-treated after culturing, consistent with the Codex Standard.

k. *Use of optional milk-derived ingredients after pasteurization and culturing*. The current standards of identity for yogurt, lowfat yogurt, and nonfat yogurt require the other optional dairy ingredients, when used, to be included in the culturing process and do not provide for the use of optional milk-derived ingredients after pasteurization (§§ 131.200(a), 131.203(a), and 131.206 (a), respectively). NYA requested that FDA revise the yogurt standards to allow the use of optional milk-derived ingredients after the pasteurization and culturing steps in the manufacture of yogurt. Comments to the ANPRM both supported and opposed the NYA recommendation. Some of the opposing comments expressed safety concerns with adding milk-derived ingredients after pasteurization. The agency is not persuaded by NYA's argument, nor did NYA submit any convincing evidence that could overcome the agency's and some of the comments' concern about the safety issues that would arise with the use of milk-derived ingredients after pasteurization of the yogurt mix. FDA is also not convinced of the need for, nor is it aware of, the advantages provided by the use of milk-derived ingredients after the culturing process. Therefore, FDA is not proposing to provide for the use of optional milk-derived ingredients following pasteurization and culturing processes as requested by NYA.

l. *Use of whey protein concentrate as a basic ingredient*. The current standards of identity for yogurt, lowfat yogurt, and nonfat yogurt do not allow the use of whey protein concentrate as a basic ingredient (§§ 131.200(c), 131.203(c), and 131.206(c), respectively). NYA requested that FDA revise the yogurt standards to allow the use of whey protein concentrate as a basic ingredient. NYA asserted that the inclusion of whey protein concentrate in yogurt products is standard industry practice and should be included in the yogurt standards. NYA also mistakenly believes that the stayed provisions of §§ 131.200(d), 131.203(d), and 131.206(d) would have permitted its inclusion. Comments to the ANPRM

both favored and opposed permitting the inclusion of whey protein concentrate in yogurt products. The comments that favored permitting its use in yogurt products cited their function as stabilizers while those opposed questioned the need for its inclusion.

FDA clarifies that the 1982 stayed provisions include paragraph (d)(1) of the current yogurt standard (§ 131.200), which limits the use of optional milk-derived ingredients to the ones specifically listed under that paragraph. The list of basic milk ingredients in paragraph (c) of the current yogurt standard was not among the provisions that were stayed and, therefore, the current standard makes no allowance for the use of whey protein concentrate as a basic ingredient in yogurt. FDA agrees with the comments that question the need for allowing the use of whey protein concentrate as a basic ingredient in yogurt. FDA believes that use of whey protein concentrate as a basic ingredient in yogurt is not consistent with the basic nature of yogurt. This is consistent with the agency's recent tentative decision not to permit milk protein concentrates as a basic ingredient in standardized cheese (which is noted in a recent proposal to permit fluid ultrafiltered milk in standardized cheeses and related cheese products; 70 FR 60751, October 19, 2005). Some comments that supported this provision cited the function of whey protein concentrates as stabilizers. FDA notes that the agency does not object to the use of safe and suitable stabilizers in yogurt and the current standard provides for the use of stabilizers as an optional ingredient in yogurt. FDA has no evidence at this time to support the amendment of the list of permitted basic ingredients in yogurt to include whey protein concentrate. Therefore, FDA is not proposing to provide for the use of whey protein concentrate as a basic ingredient in yogurt as requested by NYA.

m. *Percent dairy ingredients*. The current standards of identity for yogurt, lowfat yogurt, and nonfat yogurt (§§ 131.200, 131.203, and 131.206, respectively) do not require a minimum of 51 percent of dairy ingredients in these foods. NYA requested that FDA revise the yogurt standards to include this requirement to ensure that the predominant ingredients in yogurt are from dairy sources. One trade association supported the inclusion of this requirement while a few other comments questioned the appropriateness of the 51 percent requirement. Comments that opposed this requirement expressed concern that under such a requirement, yogurts could contain up to 49 percent non-dairy ingredients. FDA is not convinced that there is a need to require a minimum amount of dairy ingredients to ensure that dairy ingredients are the primary ingredients of yogurt. The yogurt standard currently requires that the basic ingredients of yogurt be either milk or certain milk-derived ingredients and that yogurt must contain a specified minimum amount of milk solids not fat. FDA tentatively concludes that these provisions adequately ensure that appropriate amounts of dairy ingredients are used in the manufacture of yogurt. Therefore, FDA is not proposing to require a minimum amount of dairy ingredients in yogurt as requested by NYA.

n. *Use of any safe and suitable ingredient that serves a nutritional or functional purpose*. The current standards of identity for yogurt, lowfat yogurt, and nonfat yogurt (§§ 131.200, 131.203, and 131.206, respectively) do not permit the optional use of any safe and suitable ingredient for a nutritional or functional purpose. NYA requested that FDA revise the yogurt standards to allow for such safe and suitable ingredients so that there would be enough flexibility in the standards to permit the use of novel ingredients as they are developed in the future. Comments to the ANPRM both favored and opposed the NYA recommendation. The comments that supported NYA's recommended provision stated that it would allow for future advances in ingredient technology while other comments that opposed this provision stated that it could lead to the use of inferior quality ingredients.

FDA recognizes the need for food standards to permit flexibility in food technology, so long as that technology does not alter the basic nature or essential characteristics of the food (68 FR 39873 at 39875). However, FDA does not believe that there is a need for a broad provision to permit any safe and suitable ingredient for a nutritional or functional purpose as recommended by NYA. The existing regulatory framework governing standardized foods already provides for the addition of substances for a nutritional purpose. Under the provisions of § 130.10, standardized foods may be modified to contain nutrients not specifically permitted by the relevant standard of identity and to make an expressed nutrient content claim defined by FDA regulation.

As for the use of ingredients for a functional purpose, the proposed yogurt standard provides for the use of specific functional categories of ingredients such as emulsifiers and stabilizers. FDA tentatively concludes that a provision that broadly permits any safe and suitable ingredient for functional purposes is not necessary and the lack of comments in response to its request in the ANPRM on the need for any functional categories of ingredients in addition to the ones that NYA proposed supports the agency's tentative conclusion. As explained earlier in this section of the document, FDA is proposing to provide for the use of specific functional ingredient categories such as emulsifiers and stabilizers and will consider future requests made under 21 CFR 10.30 for amendments for ingredient categories that are not included in the proposed yogurt standard. However, FDA is not persuaded at this time that a provision that broadly permits any safe and suitable ingredient for a technical purpose is needed in addition to the proposed specific functional ingredient categories. Therefore, FDA is not proposing to permit any safe and suitable ingredient for a nutritional or functional purpose in yogurt as requested by NYA.

o. *Methods of analysis*. The current standards of identity for yogurt, lowfat yogurt, and nonfat yogurt list the methods of analysis for milkfat content, total solids content, and titratable acidity that are from the ''Official Methods of Analysis of AOAC International,'' 13th Ed. (1980) (§§ 131.200(e), 131.203(e), and 131.206(e), respectively). FDA is proposing to revise § 131.200(e) to update these methods to incorporate by reference the ''Official Methods of Analysis of AOAC International,'' 18th Ed. (2005). In addition, FDA is proposing that the pH of yogurt, when used to determine the acidity of yogurt, be determined using the method described in § 114.90(a) (21 CFR 114.90(a)). Finally, FDA is proposing that the live and active cultures content of yogurt be determined using the aerobic plate count methods described in Chapter 3 of FDA's Bacteriological Analytical Manual, January 2001 Edition. FDA seeks comment on the appropriateness of the proposed methods and any alternate methods that should be considered in lieu of or in addition to the methods proposed in § 131.200(e).

p. *Vitamins and minerals as optional ingredients*. The current standards of identity for yogurt, lowfat yogurt, and nonfat yogurt provide for optional fortification of these foods with vitamins A and D (§§ 131.200(b), 131.203(b), and 131.206(b), respectively). If vitamins A and/or D are added for this purpose, the standards require these vitamins to be present in

amounts of 2,000 International Units (IU) of vitamin A and/or 400 IU of vitamin D per quart (or 946 milliliters) of the food. In addition, in §§ 131.200(f)(1)(iii), 131.203(f)(1)(iv), and 131.206(f)(1)(iii), the standards require the phrase ''vitamin A'' or ''vitamin A added,'' or ''vitamin D'' or ''vitamin D added,'' or ''vitamins A and D added,'' as appropriate, to accompany the name of the food.

NYA requested that FDA retain this provision for the optional fortification of yogurt with vitamins A and/or D. NYA also requested that the levels of fortification also be retained. However, NYA stated that yogurt is rarely measured by quart and, therefore, listed the minimum amounts of vitamins A and D fortification in terms of yogurt's reference amount customarily consumed (RACC), i.e., 225 g (21 CFR 101.12). Comments in response to the ANPRM did not specifically address this provision.

In § 101.54(e) (21 CFR 101.54(e)), FDA has established requirements for claims related to the fortification of foods with certain nutrients, including vitamins and minerals. These requirements apply to any food (unless otherwise in conflict with the requirements specified in a standard of identity) that contains added vitamins or minerals for the purpose of making a relative labeling claim such as ''fortified'' or ''added.'' According to the provisions of this regulation, a relative claim such as ''fortified'' or ''added'' may be made in the labeling of a food, provided that the food contains at least 10 percent more of the reference daily intake for vitamins and minerals per RACC compared to an appropriate reference food.

This requirement currently applies to yogurts that bear a fortification claim with respect to vitamins or minerals other than vitamins A and D. When yogurt is fortified with vitamins A and D, the requirements for the optional use of these two vitamins specified in the yogurt standard apply. FDA points out that the provision for the optional fortification of yogurt with vitamins A and D was established in 1981 prior to the implementation of the NLEA and the adoption of the certain nutrient content and relative claims regulations, including § 101.54. FDA believes that it is appropriate to apply the provisions of § 101.54(e) to vitamins A and D fortification of yogurt as they currently apply to fortification of yogurt with other vitamins and minerals and as they currently also apply to vitamin and mineral fortification of other foods. FDA also believes that the modernization of the yogurt standard should include bringing the outdated vitamins A and D fortification provisions in conformity with the applicable relative claims provisions and thus ensure consistency in the use of these claims in the labeling of foods. Therefore, FDA is proposing to revoke § 131.200(b), which provides for specific optional amounts of vitamins A and/or D in yogurt, and § 131.200(f)(1)(iii), which provides for special labeling of yogurt that contains vitamins A and D in accordance with § 131.200(b). FDA seeks comment on the need for and appropriateness of this tentative decision. Specifically, FDA seeks comment on (1) whether the agency should retain current § 131.200(b) and, if so, what the legal or scientific justification for retaining this provision is, and (2) the appropriateness of applying § 101.54(e) to yogurt fortified with vitamins A and/or D.

2. Revocation of the Standards of Identity for Lowfat and Nonfat Yogurts

NYA and most of the comments to the ANPRM requested that FDA establish a single, modernized standard of identity for yogurt that would provide for lower-fat versions of the food rather than the current fragmented standards for yogurt, lowfat yogurt, and nonfat yogurt. NYA and some comments also expressed that providing for lowfat and nonfat yogurts within a single yogurt standard of identity would preclude the need to apply the ''nutritional equivalence'' requirements of § 130.10 to the lowfat and nonfat yogurts. NYA stated that imposing the nutritional equivalence requirement on lowfat and nonfat yogurt would pose an unnecessary and substantial cost to the yogurt industry.

Establishing a single standard for yogurt and providing for variations of the food within the standard is consistent with the general principles that FDA proposed for modernizing food standards. A single standard would maintain a uniform set of requirements for all yogurt products, whether they are full-fat or lower-fat versions, while providing flexibility and ease of compliance to manufacturers. Therefore, FDA is proposing to revoke the standards of identity for lowfat yogurt (§ 131.203) and nonfat yogurt (§ 131.206). However, rather than establishing separate requirements for ''lowfat yogurt'' and ''nonfat yogurt'' within the yogurt standard of identity, FDA is proposing that lower-fat versions of yogurt may be produced under the current provisions of § 130.10.

Section 130.10 sets out requirements for foods that are named by use of an FDA-defined nutrient content claim and a standardized term. In 1993, FDA established § 130.10, among several other regulations implementing the provisions of the NLEA, to assist consumers in maintaining healthy dietary practices by providing for modified versions of standardized foods that bear descriptive names that are meaningful to consumers. Under the provisions of § 130.10, manufacturers may modify standardized foods to make them eligible to bear a nutrient content claim that is defined by FDA regulation, for example: ''reduced fat sour cream,'' ''light margarine,'' or ''low fat cheddar cheese.'' One of the provisions of this regulation requires that such modified foods be restored in their nutrient content such that the modified food is not nutritionally inferior to the standardized version (see § 130.10(b)).

Following the codification of § 130.10, FDA revoked a number of lowfat and nonfat dairy food standards, including those for lowfat and nonfat milk products and lowfat cheeses, to ensure that the use of nutrient content claims in the labeling of these products would be consistent with the provisions of the NLEA. FDA also proposed to revoke the standards for lowfat and nonfat yogurts; however, based on comments received at that time, FDA delayed final action on its proposal to revoke these standards for 120 days because of the technical difficulties and economic considerations associated with their revocation (61 FR 58991 at 58999). FDA acknowledged that if the standards for lowfat and nonfat yogurts were revoked, modifying the standardized food yogurt to make the nutrient content claims ''lowfat'' or ''nonfat'' under the provisions of § 130.10 would require addition of vitamin A to make the product nutritionally equivalent to full-fat yogurt. FDA also acknowledged that such a nutrient addition requirement could potentially result in significant relabeling, reformulation, and equipment costs to manufacturers. FDA advised of its intention to move to resolve this matter at the end of the 120-day period. However, as FDA noted in the ANPRM, the agency has not resolved this issue.

Many of the comments in response to the ANPRM did not offer any specific comments on this issue. A few, however, recommended that FDA should not apply the provisions of § 130.10 to yogurt. These comments were concerned with over-fortification should FDA require that lowfat and nonfat yogurts be restored to the vitamin A levels found in full-fat yogurt. These comments did not provide any factual information or data to support their stated concern of vitamin A over-fortification.

FDA believes that it is appropriate to apply the provisions of § 130.10 to

yogurt as they currently apply to all other standardized foods, including standardized dairy foods. FDA points out that it deferred action on this issue in 1996 to enable the yogurt industry to be better able and equipped to meet the nutritional equivalence requirements of § 130.10. FDA sees no reason to continue to exempt lowfat and nonfat yogurts from the nutritional equivalence requirements that apply to all other standardized foods that make lowfat or nonfat nutrient content claims. Further, FDA received no data nor is it aware of any information to support the concern of over-fortification. Yogurt made with whole milk contains 27 µg retinol activity equivalents (RAE) (a unit measurement of vitamin A) per 100 g compared to 14 µg RAE/100 g in lowfat yogurt and 2 µg RAE/100 g in nonfat yogurt (USDA National Nutrient Database for Standard Reference—Release 19) (Ref. 3). Restoring the levels of vitamin A in lowfat and nonfat yogurts would require adding vitamin A in amounts necessary to increase the level of vitamin A in these foods to about 27 µg RAE/100 g, with reasonable deviations from this level permitted by FDA labeling regulations. According to the Institute of Medicine (IOM), the median intake of vitamin A ranges from 744 to 811 µg RAE/day for men and 530 to 716 µg RAE/day for women, with about 26 and 34 percent of this vitamin A activity provided by provitamin A carotenoids among men and women, respectively. These median intake levels are well below the IOM-established tolerable upper intake level (UL) for adults of 3,000 µg/day of preformed vitamin A (Ref. 5). According to a USDA report, the vitamin A content per capita per day in the U.S. food supply remained at a relatively constant level over the past two decades, ranging from 1,220 µg RAE in 1980 to 1,260 µg RAE in 2000 (Ref. 6). More specifically, the vitamin A content of the food supply did not change significantly since 1996 (1280 RAE), when FDA deferred action on revoking the lowfat and nonfat yogurt standards because of concerns about industry capability to restore vitamin A levels of yogurt. Moreover, although per capita consumption of all yogurt has steadily increased during this time from 5.9 pounds in 1996 to 8.2 pounds in 2003 (Ref. 7) (these data were not categorized based on fat content of the yogurt), the contribution of yogurt to daily vitamin A intake would not be expected to be altered significantly if the nutritional equivalency requirements of § 130.10 were to apply to lowfat and nonfat yogurts. For example, if all of the 8.2 pounds of yogurt consumed per capita in 2003 were to contain vitamin A levels equivalent to that found in full-fat yogurt, the vitamin A contribution of that amount of yogurt would be about 1,005 µg RAE vitamin A per capita per year or 2.7 µg RAE/day. Considering that the vitamin A content of the food supply is about 1,260 µg RAE per capita per day, the calculated contribution of yogurt (assuming all yogurt has vitamin A at levels found in full-fat yogurt) of about 2.7 µg RAE per capita per day is small. Therefore, subjecting yogurt to the nutritional equivalency provisions of § 130.10 is not expected to raise the overall vitamin A content of the food supply significantly.

After considering all relevant issues, including the safety concerns related to vitamin A addition, FDA tentatively concludes that the best approach is to revoke the existing lowfat and nonfat yogurt standards and to permit the modification of the standardized food yogurt to bear nutrient content claims, including ''low fat'' and ''nonfat,'' under the existing provisions of § 130.10. Further, under this proposal, manufacturers would be able to continue to make yogurt products bearing other nutrient content claims, such as ''reduced fat yogurt'' or ''light yogurt'' under the provisions of § 130.10.

Accordingly, for the reasons stated in this section, FDA is proposing to do the following:

(1) Amend the yogurt standard of identity in 21 CFR 131.200 to:

(a) Provide for the use of reconstituted forms of cream, milk, partially skimmed milk, and skim milk as basic dairy ingredients;

(b) Permit the use of any safe and suitable milk-derived ingredients to increase the nonfat solids content, provided such addition does not adversely affect the protein quality or content of the food;

(c) Apply the minimum milkfat content of 3.25 percent and minimum milk solids not fat content of 8.25 percent prior to the addition of bulky flavoring ingredients;

(d) Require an acidity of yogurt of either a titratable acidity of not less than 0.7 percent expressed as lactic acid or a pH of 4.6 or lower;

(e) Permit the use of any safe and suitable cultures in addition to the required characterizing bacterial cultures specified in the standard;

(f) Permit the use of any safe and suitable sweetening ingredients;

(g) Permit the use of any safe and suitable emulsifiers in addition to stabilizers;

(h) Permit the use of any safe and suitable preservatives;

(i) Require yogurt that is not heat-treated and is labeled with the phrase ''contains live and active cultures'' or other appropriate descriptor to contain live and active cultures of 10^7 CFU/g at the time of manufacture with a reasonable expectation of 10^6 CFU/g throughout the manufacturer's assigned shelf life of the food;

(j) Revoke the provisions within the standard that permit the addition of vitamins A and D and state the labeling requirements such that these vitamins may be added to yogurt under § 101.54(e);

(k) Update the methods of analysis for milkfat and total solids contents and titratable acidity to incorporate by reference the Official Methods of Analysis of AOAC International 18th Ed. (2005);

(l) Provide that the pH of yogurt, when used to determine the acidity of yogurt, be determined using the method described in § 114.90(a); and

(m) Provide that the live and active cultures content of yogurt be determined using the aerobic plate count methods described in Chapter 3 of FDA's Bacteriological Analytical Manual, January 2001 Edition and

(2) Revoke the lowfat yogurt and nonfat yogurt standards of identity in §§ 131.203 and 131.206, respectively, such that the standardized food yogurt in proposed § 131.200 could be modified to produce lower-fat versions under the current provisions of § 130.10, which describe the requirements for foods named by use of a nutrient content claim (including ''low fat'' and ''fat free'') and a standardized term (such as ''yogurt'').

As explained previously, FDA tentatively concludes that these amendments are appropriate and will promote honesty and fair dealing in the interest of consumers.

Pending issuance of a final rule amending the existing standard of identity for yogurt and revoking the existing lowfat and nonfat yogurt standards of identity, FDA intends to consider the exercise of its enforcement discretion on a case-by-case basis when yogurt products are in compliance with the standard of identity proposed in this proposed rule and when the labeling of such products is not otherwise false or misleading. The act's enforcement provisions commit complete discretion to the Secretary (and by delegation to FDA) to decide how and when they should be exercised (*Heckler* v. *Chaney*, 470 U.S. 821 at 835 (1985); *Schering Corp.* v. *Heckler*, 779 F.2d 683 at 685–86 (D.C. Cir. 1985) (stating that the

provisions of the act ''authorize, but do not compel the FDA to undertake enforcement activity'')). Until the agency issues a final rule amending the current yogurt standard and revoking the current lowfat and nonfat yogurt standards, the agency believes that its exercise of enforcement discretion will help alleviate the confusion that the petitioner contends has resulted due to the existence of the stayed provisions of the current yogurt standards. In addition, the agency believes that its exercise of enforcement discretion will also provide a clear and flexible standard and encourage greater consistency and uniformity in the marketplace for yogurt products, and thereby assist consumers in making informed product choices.

C. NYA's Recommended Amendments to the Standard of Identity for Cultured Milk

NYA requested that FDA revise the current standard of identity for cultured milk (§ 131.112) to (1) provide for the alternate term ''fermented milk;'' (2) require a minimum level of total dairy ingredients of 51 percent; (3) permit the use of reconstituted milk and whey protein concentrate as ''standard dairy ingredients;'' (4) provide for the use of any milk-derived ingredients as ''optional dairy ingredients;'' (5) permit the use of safe and suitable sweeteners, emulsifiers, and preservatives; and (6) permit the use of any safe and suitable ingredients added for nutritional or functional purpose.

FDA tentatively concludes that NYA did not provide a sufficient basis to amend the cultured milk standard. NYA did not provide a rationale for its proposed amendments to the cultured milk standard other than to simply fit into the standard for ''cultured milk'' those yogurt products that would not be permitted to be named ''yogurt'' under NYA's recommended standard for yogurt. Nor did NYA address, as a number of comments to the ANPRM pointed out, the consumer confusion that might occur from including semisolid yogurt-type products (that would not qualify as ''yogurt'' under NYA's recommended yogurt standard) in the cultured milk standard, which has long been associated with fluid cultured milk products.

III. Analysis of Economic Impacts

A. Preliminary Regulatory Impact Analysis

We are publishing this proposed rule under the formal rulemaking process. Executive Order 12866 does not require us to analyze the costs and benefits of proposed rules that we publish under this rulemaking process.

B. Initial Regulatory Flexibility Analysis

The Regulatory Flexibility Act requires agencies to analyze regulatory options that would minimize any significant impact of a rule on small entities. Because this proposed rule may generate compliance costs for some small firms, the agency believes that this proposed rule would have a significant economic impact on a substantial number of small entities. FDA requests comment on this issue. The following analysis, in conjunction with the preamble, constitutes the agency's initial regulatory flexibility analysis as required by the Regulatory Flexibility Act.

One requirement of the Regulatory Flexibility Act is a succinct statement of any objectives of the rule. As stated previously in this analysis, with this rule the agency intends to amend the yogurt standard and revoke the lowfat and nonfat yogurt standards to promote honesty and fair dealing in the interest of consumers. The proposed amendments are intended to modernize the current yogurt standards to permit flexibility and provide for technological advances in yogurt production, while preserving the basic nature and essential characteristics of yogurt consistent with consumer expectations and thus protecting consumer interest.

Regulatory Options

We considered the following regulatory options:

(1) Take no action,

(2) Take the proposed action,

(3) Take the proposed action except for the acidity requirements,

(4) Take the proposed action except for applying the nutritional equivalency provisions to lowfat and nonfat yogurt, and

(5) Take the proposed action except for the minimum live and active cultures requirements for yogurt bearing labeling such as ''Contains Live and Active Cultures''.

Option One: Take No Action

We can only define costs relative to a baseline. We usually select the option of taking no action as the baseline because it helps readers identify the costs of actions that change the status quo. By definition, the baseline itself has no costs.

Option Two: Take the Proposed Action

This proposed regulation would affect yogurt manufacturing firms in North American Industry Classification System (NAICS) code 311511, Fluid Milk Manufacturing. The Small Business Administration defines a small business in NAICS code 311511 as a business with 500 or fewer employees. This proposed regulation would not affect firms that manufacture nonstandardized products such as frozen yogurt (NAICS code 311520: Ice Cream and Frozen Dessert Manufacturing) and dried yogurt-style mixes (NAICS code 311514: Dry, Condensed, and Evaporated Dairy Product Manufacturing), or products that contain yogurt as an ingredient (miscellaneous NAICS codes). We request comment on the types of firms that would be affected by this proposed rule.

We searched an online commercial database, D&B Dun's Market Identifiers, for firms in NAICS code 311511 that had the word ''yogurt'' in the description of the firm's activity and 500 or fewer employees and found 34 firms. We also searched for manufacturing establishments using the same procedure and found 33 manufacturing establishments. We are only interested in firms that actually operate manufacturing establishments, so we estimate that 33 small firms manufacture yogurt.

Our analysis of existing requirements and the proposed requirements suggests that only three provisions of this proposed rule might require some small firms to change their current activity. The other provisions of this proposed rule are either consistent with current requirements or provide additional flexibility to firms beyond that available under current requirements. For purposes of this analysis, we only associate costs with those proposed provisions that might require some small firms to change their current activity: We do not classify as costs of this proposed rule any voluntary costs that some small firms may undergo because they choose to change their manufacturing practices in ways that would be newly permitted by the proposed regulation. We request comments on the provisions of this proposed rule that might require small firms to change their current activity. The three provisions that we believe might require some small firms to change their current activity are as follows:

- The proposed requirement that yogurt have either a titratable acidity of not less than 0.7 percent expressed as lactic acid or a pH of 4.6 or lower. The requirement that yogurt have a minimum titratable acidity of 0.9 percent was stayed, and yogurts in the current marketplace are not subject to this acidity requirement.

• The proposed application of the nutritional equivalency provisions of § 130.10 to lowfat and nonfat yogurt, which would require firms to fortify their lowfat and nonfat yogurt with vitamin A. Currently, we do not require lowfat and nonfat yogurt to be nutritionally equivalent to regular yogurt.

• The proposed requirement that yogurt bearing optional labeling statements such as ''contains live and active cultures'' must contain a minimum of 10^7 CFU/g of live and active cultures at the time of manufacture of the yogurt with a reasonable expectation that the yogurt will contains live and active cultures at a level of 10^6 CFU/g through the manufacturer's assigned shelf life of the product. Currently, we do not require yogurt with labeling such as ''contains live and active cultures'' to contain any particular minimum level of live and active cultures.

With respect to the requirements relating to acidity, we believe that all or nearly all yogurt currently on the market has a titratable acidity well above the proposed minimum cutoff of 0.7 percent titratable acidity, usually in the range of 1.0 to 1.3, and a pH level well below the proposed maximum level of 4.6, usually in the range of 4.1 to 4.3. Some comments in response to the ANPRM said that the proposed minimum titratable acidity percentage and maximum pH level reflect current industry practice. Nevertheless, some yogurt produced by small manufacturers might not meet one of these acidity requirements. If a yogurt did not meet one of these requirements, then the manufacturer would need to change its manufacturing process to produce yogurt that complies with the acidity requirement. Potential ways to increase the acidity of the product include increasing the amount of yogurt cultures and/or increasing the time and/or temperature of fermentation. We do not have sufficient information to estimate the costs of taking such steps. However, the likelihood that any plants would need to take these steps is very low. Therefore, we estimate that the proposed acidity requirements would generate minimal or no compliance costs.

We previously analyzed the costs associated with applying the nutritional equivalency provisions of § 130.10 to lowfat and nonfat yogurt, which may require some small yogurt manufacturing firms to fortify their lowfat and nonfat yogurt with vitamin A, in a final rule that revoked standards of identity for several low fat and nonfat dairy products (61 FR 58991). In that analysis, we estimated this provision would generate a one-time cost of up to $52 million. We based that estimate on comments that suggested that 69 percent of yogurt manufacturers at that time produced only standardized yogurt and did not have the necessary vitamin metering equipment to add vitamins to their product and a comment that said that the necessary equipment would cost $250,000 per plant. We estimated there were 300 yogurt-producing plants of all sizes in 1996. We also estimated a one-time present value of $240,000 for the annual cost of adding vitamin A, which is the only vitamin that we assumed manufacturers would need to add to yogurt. We arrived at the total estimate of $52 million as follows: [(300 yogurt manufacturing plants x 69 percent of plants needing equipment = 207 plants needing equipment) x $250,000 per plant for equipment] + $240,000 total present value for obtaining and adding vitamin A (61 FR 58991 at 59001).

FDA experts on the yogurt manufacturing industry believe that the cost for small firms to add vitamins to yogurt would be significantly lower now. Our current estimate is that the total cost to set up the necessary equipment would be no more than $50,000 per plant. In addition, some small plants may vat pasteurize and add vitamins manually to the batch of yogurt base before pasteurizing and fermenting. These plants would not need to purchase additional equipment. Therefore, we now estimate that equipment costs to add vitamins would be between $0 and $50,000 per plant.

As previously stated, we estimated that there are 33 small firms that manufacture yogurt. We do not know how many of these plants produce only yogurt and, therefore, do not already have the equipment necessary to add vitamins. In the absence of other information, we retain the information that we received in 1996 that 69 percent of yogurt-producing plants do not have the necessary equipment. In that case, approximately 23 small yogurt producing plants might need to buy equipment to add vitamins to yogurt. We do not know how many of these plants could add vitamins manually without needing additional equipment. Therefore, we estimate that the total equipment cost for these 23 plants would be between $0 and $1.15 million (23 x $50,000). These 23 plants represent 11 percent of the 207 yogurt producing plants of all sizes that we estimated in 1996 would need to buy the necessary equipment. If we scale down our previous estimate of the one-time present value of $240,000 for the annual cost of adding vitamin A by the number of small plants that may need to buy equipment to add vitamins to lowfat or nonfat yogurt, then the one-time present value would be approximately $27,000. Therefore, our total estimate of the cost to add vitamin A is between $0 and $1 million, i.e., [(33 small yogurt manufacturing plants x 69 percent of plants needing equipment = 23 plants needing equipment) x $50,000 per plant] + [($240,000 total present value for obtaining and adding vitamin A for 207 plants operated by firms of all sizes) x (23 plants operated by small firms / 207 plants operated by firms of all sizes)]. We request comments on our estimate of the number of small firms that would need equipment to add vitamins, the cost of this equipment, and the cost of adding vitamin A. We also request comments on whether the proposed rule would require any small firms to add any nutrients other than vitamin A to yogurt.

We do not know how many yogurt products currently have labeling such as ''contains live and active cultures'' but do not meet the proposed requirements relating to levels of live and active cultures. We estimated the one-time cost of changing all yogurt labels using a computer model developed for that purpose [FDA Labeling Cost Model. Final Report. Revised January 2003. Research Triangle Institute.] The estimated cost was $9 million to $21 million. However, some yogurt is produced by firms that are not small businesses. We again searched D&B Dun's Market Identifiers, for all firms in NAICS code 311511 that had the word ''yogurt'' in the description of the firm's activity and found a total of 46 firms. We estimated earlier that 33 of these are small manufacturing firms. Therefore, approximately 72 percent of the firms manufacturing yogurt are small. We assume that all firms produce roughly the same number of yogurt products so that labeling costs are roughly similar across firms. Under this assumption, the potential labeling costs for small firms are approximately 72 percent of the potential labeling costs for all firms, or $6 million to $15 million. We do not know how many yogurt products produced by small firms bear labeling such as ''contains live and active cultures.'' Therefore, we estimate one-time labeling costs for small firms to be $0 to $15 million.

In summary, we estimate the proposed rule would generate costs for small firms of $0 to $1 million for installing vitamin metering equipment and adding vitamin A to some lowfat and nonfat yogurt and $0 to $15 million to change the labels on some yogurt

products that bear labeling such as ''contains live and active cultures.'' Therefore, we estimate total costs of $0 million to $16 million. This amounts to an average cost of approximately $0 to $498,000 for each of the 23 small firms that need vitamin metering equipment and $0 to $450,000 for each of the 10 small firms that do not.

Option Three: Take the Proposed Action Except For the Acidity Requirements

Eliminating the acidity requirements would eliminate the costs associated with meeting those proposed requirements. In our discussion of Option Two, we estimated those costs to be minimal or zero. Therefore, we estimate total costs under this option to be $0 million to $16 million.

Option Four: Take the Proposed Action Except For Applying the Nutritional Equivalency Provisions to Lowfat and Nonfat Yogurt

Eliminating the application of the nutritional equivalency provisions to lowfat and nonfat yogurt would eliminate the costs associated with meeting those proposed requirements. In our discussion of Option Two, we estimated those costs to be $0 to $1 million. Therefore, we estimate total costs under this option to be $0 to $15 million.

Option Five: Take the Proposed Action Except For the Minimum Live and Active Cultures Requirements for Yogurt Bearing Labeling Such As ''Contains Live and Active Cultures''

Eliminating the proposed minimum live and active cultures requirement for yogurt bearing labeling such as ''contains live and active cultures'' would eliminate the costs associated with meeting that proposed requirement. In our discussion of Option Two, we estimated those costs to be $0 to $15 million. Therefore, we estimate total costs under this option to be $0 to $1 million.

C. Unfunded Mandates Reform Act of 1995

Section 202(a) of the Unfunded Mandates Reform Act of 1995 (Public Law 104–4) requires that agencies prepare a written statement, which includes an assessment of anticipated costs and benefits, before proposing ''any rule that includes any Federal mandate that may result in the expenditure by State, local, and tribal governments, in the aggregate, or by the private sector, of $100,000,000 or more (adjusted annually for inflation) in any one year.'' The current threshold after adjustment for inflation is $130 million, using the most current (2007) Implicit Price Deflator for the Gross Domestic Product. FDA does not expect this proposed rule to result in any 1-year expenditure that would meet or exceed this amount.

IV. Federalism

FDA has analyzed this proposed rule in accordance with the principles set forth in Executive Order 13132. Section 4(a) of the Executive Order requires agencies to ''construe * * * a Federal statute to preempt State law only where the statute contains an express preemption provision or there is some other clear evidence that the Congress intended preemption of State law, or where the exercise of State authority conflicts with the exercise of Federal authority under the Federal statute.''

Section 403A of the act (21 U.S.C. 343–1) is an express preemption provision. Section 403A(a) of the act (21 U.S.C. 343–1(a)) provides that: ''* * * no State or political subdivision of a State may directly or indirectly establish under any authority or continue in effect as to any food in interstate commerce—(1) any requirement for a food which is the subject of a standard of identity established under section 401 that is not identical to such standard of identity or that is not identical to the requirement of section 403(g). * * *''

This proposed rule, if finalized as proposed, would make changes to the existing standards of identity for yogurt, lowfat yogurt, and nonfat yogurt. Although any final rule would have a preemptive effect in that it would preclude States from issuing any requirements for the standard of identity of yogurt that are not identical to the requirements of the final rule, this preemptive effect is consistent with what Congress set forth in section 403A of the act. Section 403A(a)(1) of the act displaces both State legislative requirements and State common law duties (*Riegel* v. *Medtronic*, 128 S. Ct. 999 (2008)). In addition, as with any Federal requirement, if a State law requirement makes compliance with both Federal law and State law impossible, or would frustrate Federal objectives, the State requirement would be preempted. See *Geier* v. *American Honda Co.*, 529 U.S. 861 (2000); *English* v. *General Electric Co.*, 496 U.S. 72, 79 (1990); *Florida Lime & Avocado Growers, Inc.*, 373 U.S. 132, 142–43 (1963); *Hines* v. *Davidowitz*, 312 U.S. 52, 67 (1941).

V. Environmental Impact

The agency has determined under 21 CFR 25.32(a) that this action is of a type that does not individually or cumulatively have a significant effect on the human environment; therefore, neither an environmental assessment nor an environmental impact statement is required.

VI. Paperwork Reduction Act of 1995

FDA concludes that the provisions of this proposed rule are not subject to review by the Office of Management and Budget because they do not constitute a ''collection of information'' under the Paperwork Reduction Act of 1995 (44 U.S.C. 3501–3220).

VII. Comments

Interested persons may submit to the Division of Dockets Management (see **ADDRESSES**) written or electronic comments regarding this document. Submit a single copy of electronic comments or two paper copies of any mailed comments, except that individuals may submit one paper copy. Comments are to be identified with the docket number found in brackets in the heading of this document. Received comments may be seen in the Division of Dockets Management between 9 a.m. and 4 p.m., Monday through Friday.

Please note that on January 15, 2008, the FDA Division of Dockets Management Web site transitioned to the Federal Dockets Management System (FDMS). FDMS is a Government-wide, electronic docket management system. Electronic comments or submissions will be accepted by FDA only through FDMS at *http://www.regulations.gov*.

VIII. References

The following references have been placed on display in the Division of Dockets Management (see **ADDRESSES**) and may be seen by interested persons between 9 a.m. and 4 p.m., Monday through Friday. (FDA has verified the Web site addresses, but FDA is not responsible for any subsequent changes to the Web sites after this document publishes in the **Federal Register**.)

1. Letter to Mr. Stuart M. Pape, Patton, Boggs, & Blow from FDA, November 23, 1988.

2. Codex Standard for Fermented Milks (CODEX STAN 243–2003).

3. U.S. Department of Agriculture, Agricultural Research Service. 2006. USDA National Nutrient Database for Standard Reference, Release 19. Yogurt, plain, whole milk; yogurt, plain, low fat; yogurt, plain, skim milk.

4. Verrill L.A., Memo to file—Consumer research on standards for yogurt submitted by the National Yogurt Association, January 27, 2006.

5. Dietary reference intakes for vitamin A, vitamin K, arsenic, boron, chromium, copper, iodine, iron, manganese, molybdenum,

nickel, silicon, vanadium, and zinc. 2000. Pages 82–161. Food and Nutrition Board, Institute of Medicine, National Academy Press, Washington, DC.

6. Gerrior S., Bente L., and Hiza H. 2004. Nutrient Content of the U.S. Food Supply, 1909–2000. Home Economics Research Report No. 56. Table 2. U.S. Department of Agriculture, Center for Nutrition Policy and Promotion.

7. USDA ERS. Food availability spreadsheets. Fluid milk and cream—per capita consumption, pounds. Updated December 21, 2004. Accessed online at: *http://www.ers.usda.gov/Data/FoodConsumption/FoodAvailSpreadsheets.htm* December 28, 2005.

List of Subjects in 21 CFR Part 131

Cream, Food grades and standards, Milk, Yogurt, Incorporation by reference.

Therefore, under the Federal Food, Drug, and Cosmetic Act and under authority delegated to the Commissioner of Food and Drugs and redelegated to the Director of the Center for Food Safety and Applied Nutrition, it is proposed that 21 CFR part 131 be amended as follows:

PART 131—MILK AND CREAM

1. The authority citation for 21 CFR part 131 continues to read as follows:

Authority: 21 U.S.C. 321, 341, 343, 348, 371, 379e.

2. Revise § 131.200 to read as follows:

§ 131.200 Yogurt.

(a) *Description*. Yogurt is the food produced by culturing one or more of the basic dairy ingredients specified in paragraph (b) of this section and any of the optional dairy ingredients specified in paragraph (c) of this section with a characterizing bacterial culture that contains the lactic acid-producing bacteria, *Lactobacillus delbrueckii* subsp. *bulgaricus* and *Streptococcus thermophilus*. The ingredients specified in paragraphs (b) and (c) of this section shall be pasteurized or ultra-pasteurized prior to the addition of the characterizing bacterial culture. One or more of the other optional ingredients specified in paragraph (d) of this section may also be added. The food may be homogenized. Yogurt may be heat-treated after culturing to extend the shelf life of the food. Yogurt, before the addition of bulky flavoring ingredients, contains not less than 3.25 percent milkfat and not less than 8.25 percent milk solids not fat and has either a titratable acidity of not less than 0.7 percent expressed as lactic acid or a pH of 4.6 or lower. Yogurt that is not heat-treated after culturing may contain a minimum level of live and active cultures of 10^7 colony-forming units per gram (CFU/g) at the time of manufacture with a reasonable expectation of 10^6 CFU/g through the manufacturer's assigned shelf life of the product.

(b) *Basic dairy ingredients*. Cream, milk, partially skimmed milk, skim milk, or the reconstituted versions of these ingredients may be used alone or in combination.

(c) *Optional dairy ingredients*. Other safe and suitable milk-derived ingredients may be used to increase the nonfat solids content of the food, provided that the ratio of protein to total nonfat solids of the food, and the protein efficiency ratio of all protein present shall not be decreased as a result of adding such ingredients.

(d) *Other optional ingredients*. The following safe and suitable ingredients may be used:

(1) Cultures, in addition to the characterizing bacterial culture specified in paragraph (a) of this section.

(2) Sweeteners.

(3) Flavoring ingredients.

(4) Color additives.

(5) Stabilizers and emulsifiers.

(6) Preservatives.

(e) *Methods of analysis*. (1) The following referenced methods of analysis are from the ''Official Methods of Analysis of AOAC International,'' 18th Ed. (2005). They are incorporated by reference into this section with the approval of the Director of the Federal Register under 5 U.S.C. 552(a) and 1 CFR part 51. To enforce any edition other than that specified in this section, FDA must publish notice of change in the **Federal Register** and the material must be available to the public. All approved material is available for inspection at the National Archives and Records Administration (NARA). For information on the availability of this material at NARA, call 202–741–6030 or go to *http://www.archives.gov/federal_register/code_of_federal_regulations/ibr_locations.html*. Also, it is available for inspection at the Center for Food Safety and Applied Nutrition's Library, 5100 Paint Branch Pkwy., College Park, MD 20740, 301–436–2163, and is available from the Association of Official Analytical Chemists International, 481 North Frederick Ave., suite 500, Gaithersburg, MD 20877.

(i) Milk solids not fat—Calculated by subtracting the milkfat content from the total solids content using the methods prescribed in section 33.2.45, ''AOAC Official Method 990.21 Solids-Not-Fat in Milk by Difference between Total Solids and Fat Contents.''

(ii) Titratable acidity—As determined by the method prescribed in section 33.2.06, ''AOAC Official Method 947.05 Acidity of Milk Titrimetric Method.''

(2) pH—As determined by the potentiometric method described in § 114.90(a) of this chapter.

(3) Live and active cultures—As determined by the aerobic plate count methods described in Chapter 3 of FDA's Bacteriological Analytical Manual, January 2001 Edition. Chapter 3 of FDA's Bacteriological Analytical Manual, January 2001 Edition, is located at *http://www.cfsan.fda.gov/~ebam/bam-3.html*. The method is incorporated by reference in accordance with 5 U.S.C. 552(a) and 1 CFR part 51. The FDA will request approval to incorporate by reference any updates to this Web site. The FDA will change the date of the Web site in this paragraph with each update. You may obtain a copy from the Division of Microbiology (HFS–710), Center for Food Safety and Applied Nutrition, Food and Drug Administration, 5100 Paint Branch Pkwy., College Park, MD 20740, or you may examine a copy at the Center for Food Safety and Applied Nutrition's Library, 5100 Paint Branch Pkwy., College Park, MD 20740, 301–436–2163, or at the National Archives and Records Administration (NARA). For information on the availability of this material at NARA, call 202–741–6030, or go to: *http://www.archives.gov/federal_register/code_of_federal_regulation/ibr_locations.html*.

(f) *Nomenclature*. The name of the food is ''yogurt''. The name of the food shall be accompanied by a declaration indicating the presence of any characterizing flavoring as specified in § 101.22 of this chapter.

(1) The following terms shall accompany the name of the food wherever it appears on the principal display panel or panels of the label in letters not less than one-half of the height of the letters used in such name:

(i) The word ''sweetened'' if a sweetener is added without the addition of characterizing flavor.

(ii) The parenthetical phrase ''(heat-treated after culturing)'' shall follow the name of the food if the dairy ingredients have been heat-treated after culturing.

(2) The term ''homogenized'' may appear on the label if the dairy ingredients used are homogenized.

(3) The name of the food may be accompanied by the phrase ''contains live and active cultures'' or another appropriate descriptor if the food contains the amount of live and active cultures specified in paragraph (a) of this section.

(g) *Label declaration*. Each of the ingredients used in the food shall be declared on the label as required by the applicable sections of parts 101 and 130 of this chapter.

§ 131.203 [Removed]

3. Remove § 131.203.

§ 131.206 [Removed]

4. Remove § 131.206.

Dated: January 9, 2009.

Leslye M. Fraser,

Director, Office of Regulations and Policy, Center for Food Safety and Applied Nutrition.

[FR Doc. E9–736 Filed 1–12–09; 4:15 pm]

BILLING CODE 4160–01–S

ENVIRONMENTAL PROTECTION AGENCY

40 CFR Parts 51 and 52

[EPA–HQ–OAR–2003–0064, FRL–8763–1]

RIN 2060–AL75

Prevention of Significant Deterioration (PSD) and Nonattainment New Source Review (NSR): Debottlenecking

AGENCY: Environmental Protection Agency (EPA).

ACTION: Withdrawal of proposed rule.

SUMMARY: The EPA is withdrawing the proposed rule for ''debottlenecking'' published in the **Federal Register** on September 14, 2006. Debottlenecking is a concept used in the EPA's New Source Review (NSR) program and refers to how emissions from units upstream and downstream from the unit(s) undergoing a physical or operational change are included in the calculation of an emissions increase for the project. The intent of the September 14, 2006 proposal was to clarify how to consider emissions increases and decreases when determining major NSR applicability for sources that undergo a modification(s). Two other NSR elements included in that proposal—aggregation and project netting—are discussed in a separate document published in the ''Rules'' section of this **Federal Register**.

The decision to withdraw the rule proposal for debottlenecking is due to a variety of concerns raised by commenters on the viability of each of the proposed options. Regarding our preferred option, legal causation, we proposed to apply a ''but for'' legal cause test to account for debottlenecked emissions. However, limiting its application to only Prevention of Significant Deterioration and NSR permits, as several commenters suggested, would have severely narrowed its utility and required devising another regulatory strategy for nonqualifying permits. With respect to the other two proposed options, we had difficulty in finding workable solutions to some of the implementation issues raised by commenters. In light of the complexities we encountered with the proposed options, we have decided to withdraw the proposed rule for debottlenecking.

DATES: On January 15, 2009, the EPA hereby withdraws the proposed rule for NSR Debottlenecking published at 71 FR 54235.

FOR FURTHER INFORMATION CONTACT: Mr. David Svendsgaard, Air Quality Policy Division, Office of Air Quality Planning and Standards (C504–03), Environmental Protection Agency, Research Triangle Park, NC 27711, telephone number: (919) 541–2380; fax number: (919) 541–5509, e-mail address: *svendsgaard.dave@epa.gov.*

Dated: January 12, 2009.

Stephen L. Johnson,

Administrator.

[FR Doc. E9–816 Filed 1–14–09; 8:45 am]

BILLING CODE 6560–50–P

ENVIRONMENTAL PROTECTION AGENCY

40 CFR Part 52

[EPA–R06–OAR–2006–0357; FRL–8761–5]

Approval and Promulgation of Air Quality Implementation Plans; Texas; Approval of the Section 110(a)(1) Maintenance Plan for the 1997 8-Hour Ozone Standard for El Paso County

AGENCY: Environmental Protection Agency (EPA).

ACTION: Proposed rule.

SUMMARY: EPA is proposing to approve a revision to the Texas State Implementation Plan (SIP). The revision consists of a maintenance plan for El Paso County developed to ensure continued attainment of the 8-hour ozone National Ambient Air Quality Standard (NAAQS) for 10 years after the effective designation date of June 15, 2004. The Maintenance Plan meets the requirements of Section 110(a)(1) of the Federal Clean Air Act (CAA), EPA's rules, and is consistent with EPA's guidance.

DATES: Written comments should be received on or before February 17, 2009.

ADDRESSES: Please see the related direct final rule, which is located in the ''Rules and Regulations'' section of this **Federal Register**, for detailed instructions on how to submit comments.

FOR FURTHER INFORMATION CONTACT: Jeffrey Riley, Air Planning Section (6PD–L), Environmental Protection Agency, Region 6, 1445 Ross Avenue, Suite 700, Dallas, Texas 75202–2733, telephone 214–665–8542; fax number 214–665–7263; e-mail address *riley.jeffrey@epa.gov*.

SUPPLEMENTARY INFORMATION:

I. Why Is EPA Issuing This Proposed Rule?

This document proposes to take action on SIP revisions pertaining to the El Paso area. We have published a direct final rule approving the State's SIP revisions in the ''Rules and Regulations'' section of this **Federal Register** because we view this as a noncontroversial action and anticipate no adverse comment. We have explained our reasons for this action in the preamble to the direct final rule.

If we receive no adverse comment, we will not take further action on this proposed rule. If we receive adverse comment, we will withdraw the direct final rule and it will not take effect. We would address all public comments in any subsequent final rule based upon this proposed rule.

We do not intend to institute a second comment period on this action. Any parties interested in commenting must do so at this time. For further information, please see the information provided in the **ADDRESSES** section of this document.

Dated: December 31, 2008.

Richard E. Greene,

Regional Administrator, Region 6.

[FR Doc. E9–707 Filed 1–14–09; 8:45 am]

BILLING CODE 6560–50–P

ENVIRONMENTAL PROTECTION AGENCY

40 CFR Part 52

[EPA–R06–OAR–2007–1153; FRL–8762–3]

Approval and Promulgation of Air Quality Implementation Plans; Arkansas; Emissions Inventory for the Crittenden County Ozone Nonattainment Area; Emissions Statements

AGENCY: Environmental Protection Agency (EPA).

ACTION: Proposed rule.

SUMMARY: The Environmental Protection Agency (EPA) is proposing to approve a revision to the Arkansas State Implementation Plan (SIP) to meet the Emissions Inventory and Emissions Statements requirements of the Clean

Air Act (CAA) for the Crittenden County ozone nonattainment area. EPA is proposing to approve the SIP revision because it satisfies the Emissions Inventory and Emissions Statements requirements for 8-hour ozone nonattainment areas. EPA is proposing to approve the revision pursuant to section 110 of the CAA.

DATES: Written comments should be received on or before February 17, 2009.

ADDRESSES: Comments may be mailed to Mr. Guy Donaldson, Chief, Air Planning Section (6PD–L), Environmental Protection Agency, 1445 Ross Avenue, Suite 1200, Dallas, Texas 75202–2733. Comments may also be submitted electronically or through hand deliver/courier by following the detailed instructions in the **ADDRESSES** section of the direct final rule located in the rules section of this **Federal Register**.

FOR FURTHER INFORMATION CONTACT: Dylan Van Dyne, Air Planning Section (6PD–L), Environmental Protection Agency, Region 6, 1445 Ross Avenue, Suite 700, Dallas, Texas 75202–2733, telephone 214–665–7113; fax number 214–665–7263; e-mail address *vandyne.dylan@epa.gov*.

SUPPLEMENTARY INFORMATION: In the final section of this **Federal Register**, EPA is approving the State's SIP submittal as a direct rule without prior proposal because the Agency views this as non-controversial submittal and anticipates no adverse comments. A detailed rationale for the approval is set forth in the direct final rule. If no adverse comments are received in response to this action no further activity is contemplated. If EPA receives adverse comments, the direct final rule will be withdrawn and all public comments received will be addressed in a subsequent final rule based on this proposed rule. EPA will not institute a second comment period. Any parties interested in commenting on this action should do so at this time.

For additional information see the direct final rule, which is located in the rules section of this **Federal Register**.

Dated: December 24, 2008.

Richard E. Greene,

Regional Administrator, Region 6.

[FR Doc. E9–620 Filed 1–14–09; 8:45 am]

BILLING CODE 6560–50–P

ENVIRONMENTAL PROTECTION AGENCY

40 CFR Part 112

[EPA–HQ–OPA–2008–0821; FRL–8762–6]

RIN 2050–AG650

Oil Pollution Prevention; Spill Prevention, Control, and Countermeasure Rule Requirements—Amendments

AGENCY: Environmental Protection Agency.

ACTION: Proposed rule.

SUMMARY: The Environmental Protection Agency (EPA or the Agency) is proposing to amend the Spill Prevention, Control, and Countermeasure (SPCC) rule to tailor and streamline the requirements for the dairy industry. Specifically, EPA proposes to exempt milk containers and associated piping and appurtenances from the SPCC requirements provided they are constructed according to the current applicable 3–A Sanitary Standards, and are subject to the current applicable Grade ''A'' Pasteurized Milk Ordinance (PMO) or a State dairy regulatory requirement equivalent to the current applicable PMO. This proposal addresses concerns raised specifically by the dairy sector on the applicability of the SPCC requirements to milk containers.

DATES: Comments must be received on or before February 17, 2009.

ADDRESSES: Submit your comments, identified by Docket ID No. EPA–HQ–OPA–2008–0821, by one of the following methods:

- *http://www.regulations.gov:* Follow the on-line instructions for submitting comments.
- *Mail:* EPA Docket, Environmental Protection Agency, Mail code: 2822T, 1200 Pennsylvania Ave., NW., Washington, DC 20460.
- *Hand Delivery:* EPA/DC, EPA West, Room 3334, 1301 Constitution Ave., NW., Washington, DC. Such deliveries are only accepted during the Docket's normal hours of operation, and special arrangements should be made for deliveries of boxed information.

Instructions: Direct your comments to Docket ID No. EPA–HQ–OPA–2008–0821. EPA's policy is that all comments received will be included in the public docket without change and may be made available online at *http://www.regulations.gov,* including any personal information provided, unless the comment includes information claimed to be Confidential Business Information (CBI) or other information whose disclosure is restricted by statute. Do not submit information that you consider to be CBI or otherwise protected through *http://www.regulations.gov* or e-mail. The *http://www.regulations.gov* Web site is an ''anonymous access'' system, which means EPA will not know your identity or contact information unless you provide it in the body of your comment. If you send an e-mail comment directly to EPA without going through *http://www.regulations.gov,* your e-mail address will be automatically captured and included as part of the comment that is placed in the public docket and made available on the Internet. If you submit an electronic comment, EPA recommends that you include your name and other contact information in the body of your comment and with any disk or CD–ROM you submit. If EPA cannot read your comment due to technical difficulties and cannot contact you for clarification, EPA may not be able to consider your comment. Electronic files should avoid the use of special characters, any form of encryption, and be free of any defects or viruses. For additional information about EPA's public docket, visit the EPA Docket Center homepage at *http://www.epa.gov/epahome/dockets.htm.*

Docket: All documents in the docket are listed in the *http://www.regulations.gov* index. Although listed in the index, some information is not publicly available, e.g., CBI or other information whose disclosure is restricted by statute. Certain other material, such as copyrighted material, will be publicly available only in hard copy. Publicly available docket materials are available either electronically in *http://www.regulations.gov* or in hard copy at the EPA Docket, EPA/DC, EPA West, Room 3334, 1301 Constitution Ave., NW., Washington, DC. The Public Reading Room is open from 8:30 a.m. to 4:30 p.m., Monday through Friday, excluding legal holidays. The telephone number for the Public Reading Room is (202) 566–1744, and the telephone number for the EPA Docket is (202) 566–0276.

FOR FURTHER INFORMATION CONTACT: For general information, contact the Superfund, TRI, EPCRA, RMP, and Oil Information Center at 800–424–9346 or TDD at 800–553–7672 (hearing impaired). In the Washington, DC metropolitan area, contact the Superfund, TRI, EPCRA, RMP, and Oil Information Center at 703–412–9810 or TDD 703–412–3323. For more detailed information on specific aspects of this proposed rule, contact either Vanessa E.

Rodriguez at 202–564–7913 (*rodriguez.vanessa@epa.gov*), or Mark W. Howard at 202–564–1964 (*howard.markw@epa.gov*), U.S. Environmental Protection Agency, 1200 Pennsylvania Avenue, NW., Washington, DC, 20460–0002, Mail Code 5104A.

SUPPLEMENTARY INFORMATION: The contents of this preamble are:

I. General Information
II. Entities Potentially Affected by This Proposed Rule
III. Statutory Authority and Delegation of Authority
IV. Background
V. This Action
A. 3-A Sanitary Standards and PMO Requirements
VI. Statutory and Executive Order Reviews
A. Executive Order 12866: Regulatory Planning and Review
B. Paperwork Reduction Act
C. Regulatory Flexibility Act
D. Unfunded Mandates Reform Act
E. Executive Order 13132: Federalism
F. Executive Order 13175: Consultation and Coordination With Indian Tribal Governments
G. Executive Order 13045: Protection of Children From Environmental Health Risks and Safety Risks
H. Executive Order 13211: Actions Concerning Regulations That Significantly Affect Energy Supply, Distribution, or Use
I. National Technology Transfer and Advancement Act
J. Executive Order 12898: Federal Actions to Address Environmental Justice in Minority Populations and Low-Income Populations

I. General Information

The U.S. Environmental Protection Agency (EPA or the Agency) is proposing an amendment to the Spill Prevention, Control, and Countermeasure (SPCC) rule to exempt storage containers (both bulk and processing vessels) containing milk, as well as associated piping and appurtenances from the SPCC requirements, if they are constructed according to the current applicable 3–A Sanitary Standards, and are subject to the current applicable Grade ''A'' Pasteurized Milk Ordinance (PMO) or a State dairy regulatory requirement equivalent to the current applicable PMO.

II. Entities Potentially Affected by This Proposed Rule

Industry sector	NAICS code
Farms	111, 112
Food Manufacturing	311, 312

The Agency's goal is to provide a guide for readers to consider regarding entities that potentially could be affected by this action. However, this action may affect other entities not listed in this table. The list of potentially affected entities in the above table may not be exhaustive. If you have questions regarding the applicability of this action to a particular entity, consult the person listed in the preceding section entitled **FOR FURTHER INFORMATION CONTACT**.

III. Statutory Authority and Delegation of Authority

Section 311(j)(1)(C) of the Clean Water Act (CWA or the Act), 33 U.S.C. 1321(j)(1)(C), requires the President to issue regulations establishing procedures, methods, equipment, and other requirements to prevent discharges of oil to navigable waters or adjoining shorelines from vessels and facilities and to contain such discharges. The President delegated the authority to regulate non-transportation-related onshore facilities to EPA in Executive Order 11548 (35 FR 11677, July 22, 1970), which was replaced by Executive Order 12777 (56 FR 54757, October 22, 1991). A Memorandum of Understanding (MOU) between the U.S. Department of Transportation (DOT) and EPA (36 FR 24080, November 24, 1971) established the definitions of transportation-related and non-transportation-related facilities. An MOU between EPA, the U.S. Department of the Interior (DOI), and DOT (59 FR 34102, July 1, 1994) re-delegated the responsibility to regulate certain offshore facilities from DOI to EPA.

Then in 1995, Congress enacted the Edible Oil Regulatory Reform Act (EORRA), 33 U.S.C. 2720, which mandates that Federal agencies [1] in issuing or enforcing any regulation or establishing any interpretation or guideline relating to the transportation, storage, discharge, release, emission or disposal of oil differentiate between and establish separate classes for various types of oils, specifically: animal fats and oils and greases, and fish and marine mammal oils; oils of vegetable origin; petroleum oils, and other non-petroleum oils and greases. In differentiating between these classes of oils, Federal agencies are directed to consider differences in the physical, chemical, biological, and other properties, and in the environmental effects of the classes.

[1] The requirements of the Edible Oil Regulatory Reform Act do not apply to the Food and Drug Administration and the Food Safety and Inspection Service.

IV. Background

EPA has promulgated a series of amendments to the SPCC rule. Facilities handling animal fats and vegetable oils (AFVOs), including dairy farms that are subject to the SPCC rule because of their oil storage capacity, may benefit from a number of these amendments, including: streamlined requirements promulgated for qualified facilities (''Tier II''), a basic set of requirements for a subset of qualified facilities (''Tier I''); amendments to the security, integrity testing, and facility diagram requirements; an exemption from the loading/unloading rack requirements; an exemption for pesticide application equipment and related mix containers, and for single-family residential heating oil containers; and clarification for fuel nurse tanks and for the definition of ''facility.''

Additionally, the SPCC rule amendments differentiate integrity testing requirements at § 112.12(c)(6) for an owner or operator of a facility that handles certain types of AFVOs. EPA provides the Professional Engineer (PE) or an owner or operator self-certifying an SPCC Plan with an alternative option for integrity testing for containers that store AFVOs, based on compliance with certain U.S. Food and Drug Administration (FDA) regulations and other criteria.

Milk typically contains a percentage of animal fat, which is a non-petroleum oil. Thus, containers storing milk are subject to the SPCC rule when they meet the applicability criteria set forth in § 112.1. In the SPCC rule, the term ''bulk storage container'' is defined at § 112.2 as ''any container used to store oil.'' Therefore, bulk storage containers storing milk are subject to the applicable provisions under § 112.12. Additionally, milk is processed in vessels during the pasteurization process. These vessels, while not bulk storage containers, are considered oil-filled manufacturing equipment and are subject to the general provisions of the SPCC rule under § 112.7.

In response to EPA's October 2007 proposal for amendments to the SPCC rule (72 FR 58378, October 15, 2007), several commenters requested that EPA exempt containers used to store milk from the SPCC requirements. Specifically, these commenters suggested that milk storage containers be exempted from the SPCC requirements because the Grade ''A'' Pasteurized Milk Ordinance (PMO) addresses milk storage and tank integrity. These commenters identified the PMO, which specifically addresses milk intended for human consumption,

as a model ordinance maintained through a cooperative agreement between the States, the FDA, and the regulated community. States typically adopt it either by reference, or by directly incorporating similar requirements into their statutes or regulations.

V. This Action

EPA is proposing to exempt from SPCC requirements containers and associated piping and appurtenances that store milk provided they are constructed according to current applicable 3–A Sanitary Standards, and are subject to the current applicable PMO or a State dairy regulatory requirement equivalent to the current applicable PMO. In addition, the capacity of these milk containers would not be included in a facility's total oil storage capacity calculation (see 112.1(d)(2)(ii).

A. 3–A Sanitary Standards and PMO Requirements

Milk containers and their associated piping and appurtenances are generally constructed according to an industry standard established by the 3–A Sanitary Standards (McLean, VA), which satisfy the PMO construction requirements for milk containers and associated piping and appurtenances. These standards include American Iron and Steel Institute 300 Series stainless steel (i.e., austenitic stainless steel) or a metal that is at least as corrosion resistant and that meet specific design criteria, including, but not limited to, requirements for contact with milk (e.g., polished contact surfaces). Milk containers and associated piping and appurtenances must have smooth and impervious surfaces that are free of breaks and corrosion, including at joints and seams. These standards further specify the requirements for easy access to inspect the container's internal surfaces. The U.S. Department of Agriculture (USDA) also recognizes the 3–A Sanitary Standards-compliant containers under 7 CFR part 58 for purposes of USDA milk grading and inspection programs.

All milk handling operations subject to the PMO are required to have an operating permit, and are subject to inspection by the state dairy regulatory agencies. That is, PMO establishes criteria for the permitting, inspection and enforcement of milk handling equipment and operations that govern all processes for milk intended for human consumption. These include, but are not limited to, specifications for the design and construction of milk handling equipment, equipment sanitation and maintenance procedures, temperature controls, and pasteurization standards. In addition, because many kinds of harmful bacteria can grow rapidly in milk, and thus the PMO requires that milk containers be frequently emptied, cleaned, and sanitized (for example, every 72 hours). Such frequent cleaning of the containers suggests that any leaks or deterioration of container integrity would be quickly identified. PMO also requires an inspection of the dairy farms or milk processing plants by the state-designated regulatory agency prior to issuing a permit, and routine inspections thereafter (for example, at dairy farms at least once every six months) by a state designated regulatory agency. Inspections at these facilities encompass those elements associated with the milk operation, including the milk containers, and associated piping and appurtenances. Should the inspection result in two consecutive violations of the same criterion, PMO enforcement provisions may result in the suspension or revocation of the facility's operating permit.

As a result, EPA believes that these requirements may provide a basis for an exemption of milk containers and their associated piping and appurtenances from the SPCC rule provided they are constructed in accordance with the current applicable 3–A Sanitary Standards, and are subject to the current applicable PMO sanitation requirements or a State dairy regulatory equivalent to current applicable PMO.

EPA is requesting comment on this proposal. An owner or operator of a facility that is subject to SPCC, that has milk storage containers, and associated piping and appurtenances constructed in accordance with the current applicable 3–A Sanitary Standards, and that is effectively implementing the current applicable PMO sanitation requirements, is implementing substantial measures to prevent milk spoilage and contamination. While these measures are not specifically intended for oil spill prevention, control and countermeasure purposes, we believe they may prevent discharges of oil in quantities that are harmful and seek comment on this. We also seek comment on an exemption for milk product containers and their associated piping and appurtenances from the SPCC rule provided they are also constructed in accordance with the current applicable 3–A Sanitary Standards, and are subject to the current applicable PMO sanitation requirements or a State dairy regulatory equivalent to current applicable PMO. EPA is also requesting comment on how to address milk storage containers (including totes) that may not be constructed to 3–A Sanitary Standards under the SPCC rule and whether they should also be exempted from the SPCC requirements, provided they are subject to the current applicable PMO or a State dairy regulatory requirement equivalent to the current applicable PMO. Those commenters who support expanding the proposal to include those containers that are not constructed to 3–A Sanitary Standards should provide supporting data and information in order for the Agency to consider such an approach.

EPA requests comment on any other alternative approaches to address milk, and milk product containers and associated piping and appurtenances under the SPCC rule. The Agency requests comments on whether any action to address milk, and milk product containers, and associated piping and appurtenances under the SPCC requirements is warranted. Any alternative approaches offered, including no action, must include an appropriate rationale and supporting data in order for the Agency to be able to consider them for final action.

VI. Statutory and Executive Order Reviews

A. Executive Order 12866: Regulatory Planning and Review

Under section 3(f)(1) of Executive Order (EO) 12866 (58 FR 51735, October 4, 1993), this action is an ''economically significant regulatory action'' because it is likely to have an annual effect on the economy of $100 million or more. Accordingly, EPA submitted this action to the Office of Management and Budget (OMB) for review under EO 12866, and any changes made in response to OMB recommendations have been documented in the docket for this action.

In addition, EPA prepared an analysis of the potential costs and benefits associated with this action. This analysis is contained in ''Regulatory Impact Analysis'' for the Proposed Amendment to the Oil Pollution Prevention Regulations to Exempt Certain Milk Containers and Associated Piping and Appurtenances (40 CFR PART 112)''. A copy of the analysis is available in the docket for this action, and the analysis is briefly summarized in section C.

B. Paperwork Reduction Act

This proposed action does not impose any new information collection burden. The proposed rule amendment would exempt certain milk containers and associated piping and appurtenances

from the rule. However, the Office of Management and Budget (OMB) has previously approved the information collection requirements contained in the existing regulations, 40 CFR part 112, under the provisions of the Paperwork Reduction Act, 44 U.S.C. 3501 *et seq.* and has assigned OMB control number 2050–0021. The OMB control numbers for EPA's regulations in 40 CFR are listed in 40 CFR part 9.

C. Regulatory Flexibility Act

The Regulatory Flexibility Act generally requires an agency to prepare a regulatory flexibility analysis of any rule subject to notice and comment rulemaking requirements under the Administrative Procedure Act or any other statute unless the agency certifies that the rule will not have a significant economic impact on a substantial number of small entities. Small entities include small businesses, small organizations, and small governmental jurisdictions.

For purposes of assessing the impacts of this proposed rule on small entities, a small entity is defined as: (1) A small business as defined in the U.S. Small Business Administration (SBA)'s regulations at 13 CFR 121.201—SBA defines small businesses by category of business using North American Industry Classification System (NAICS) codes, and in the case of farms and oil production facilities, which constitute a large percentage of the facilities affected by this proposed rule, generally defines small businesses as having less than $0.5 million to $27.5 million per year in sales receipts, depending on the industry, or 500 or fewer employees, respectively; (2) a small governmental jurisdiction that is a government of a city, county, town, school district or special district with a population of less than 50,000; and (3) a small organization that is any not-for-profit enterprise that is independently owned and operated and is not dominant in its field.

After considering the economic impacts of this proposed rule on small entities, the Agency certifies that this action would not have a significant economic impact on a substantial number of small entities. In determining whether a rule has a significant economic impact on a substantial number of small entities, the impact of concern is any significant, adverse economic impact on small entities, since the primary purpose of the regulatory flexibility analyses is to identify and address regulatory alternatives ''which minimize any significant economic impact of the proposed rule on small entities'' (5 U.S.C. 603 and 604). Thus, an agency may certify that a rule would not have a significant economic impact on a substantial number of small entities if the rule relieves regulatory burden, or otherwise has a positive economic effect on all of the small entities subject to the rule.

Under this proposal, EPA would exempt milk storage containers and associated piping and appurtenances that are constructed according to 3–A Sanitary Standards and are subject to the current applicable Grade ''A'' Pasteurized Milk Ordinance (PMO), or an equivalent state dairy requirement to the current applicable PMO from SPCC rule requirements. Overall, EPA estimates that this proposed action would reduce annual compliance costs by approximately $155 million for owners and operators of affected facilities. Total costs were annualized over a 10-year period using a 7-percent discount rate. To derive this savings estimate, EPA first estimated the number of dairy farms and milk processing facilities that would be affected each year (2010–2019) by the proposed rule. EPA next analyzed the expected milk and fuel oil storage capacity of dairy farms with varying numbers of cattle based on daily production rate per cow, storage requirements for milk, and conversations with industry representatives. EPA also estimated the milk and fuel oil storage capacity of milk processing facilities, and estimated the cost savings associated with the exemption for milk storage containers at both dairy farms and milk processing facilities. These savings include secondary containment costs, cost savings from preparing and maintaining an SPCC Plan for a smaller facility, and, for Qualified Facilities, preparing only a Plan Template and saving PE certification costs. A certain number of dairy farms are expected to become exempt as a result of the amendments.

EPA has therefore concluded that this proposed rule would relieve regulatory burden for small entities and therefore, certify that this proposed action will not have a significant economic impact on a substantial number of small entities. EPA continues to be interested in the potential impacts of the proposed rule on small entities and welcomes comments on issues related to such impacts.

D. Unfunded Mandates Reform Act

This proposed action contains no Federal mandates under the provisions of Title II of the Unfunded Mandates Reform Act of 1995 (UMRA), 2 U.S.C. 1531–1538 for State, local, or tribal governments or the private sector. The proposed action imposes no enforceable duty on any State, local or tribal governments or the private sector; therefore, this action is not subject to the requirements of sections 202 or 205 of the UMRA. This proposed action is also not subject to the requirements of section 203 of UMRA because it contains no regulatory requirements that might significantly or uniquely affect small governments; the proposed amendments impose no enforceable duty on any small government.

E. Executive Order 13132: Federalism

Executive Order 13132, entitled ''Federalism'' (64 FR 43255, August 10, 1999), requires EPA to develop an accountable process to ensure ''meaningful and timely input by State and local officials in the development of regulatory policies that have federalism implications.'' ''Policies that have federalism implications'' is defined in the Executive Order to include regulations that have ''substantial direct effects on the States, on the relationship between the national government and the States, or on the distribution of power and responsibilities among the various levels of government.''

This proposed rule does not have federalism implications. It would not have substantial direct effects on the States, on the relationship between the national government and the States, or on the distribution of power and responsibilities among the various levels of government, as specified in Executive Order 13132. Under the Clean Water Act (CWA) section 311(o), States may impose additional requirements, including more stringent requirements, relating to the prevention of oil discharges to navigable waters and adjoining shorelines. EPA recognizes that some States have more stringent requirements (56 FR 54612, October 22, 1991). This proposed rule would not preempt State law or regulations. Thus, Executive Order 13132 does not apply to this proposed rule.

F. Executive Order 13175: Consultation and Coordination With Indian Tribal Governments

This action does not have tribal implications, as specified in Executive Order 13175 (65 FR 67249, November 9, 2000). This proposed rule would not significantly or uniquely affect communities of Indian tribal governments. Thus, Executive Order 13175 does not apply to this proposed rule. EPA specifically solicits additional comment on this proposed action from tribal officials.

G. Executive Order 13045: Protection of Children From Environmental Health Risks and Safety Risks

EPA interprets Executive Order 13045 as applying only to those regulatory actions that are based on health or safety risks, such that the analysis required under section 5–501 of the Order has the potential to influence the regulation. This proposed rule is not subject to Executive Order 13045 because it does not establish an environmental standard intended to mitigate health or safety risks.

H. Executive Order 13211: Actions Concerning Regulations That Significantly Affect Energy Supply, Distribution, or Use

This action is not a ''significant energy action'' as defined in Executive Order 13211 (66 FR 18355 (May 22, 2001)), because it is not likely to have a significant adverse effect on the supply, distribution, or use of energy. The overall effect of the proposed rule is to decrease the regulatory burden on facility owners or operators subject to its provisions.

I. National Technology Transfer and Advancement Act

Section 12(d) of the National Technology Transfer and Advancement Act of 1995 (''NTTAA''), Public Law No. 104–113 (15 U.S.C. 272 note) directs EPA to use voluntary consensus standards in its regulatory activities unless to do so would be inconsistent with applicable law or otherwise impractical. Voluntary consensus standards are technical standards (*e.g.*, materials specifications, test methods, sampling procedures, and business practices) that are developed or adopted by voluntary consensus standards bodies. NTTAA directs EPA to provide Congress, through OMB, explanations when the Agency decides not to use available and applicable voluntary consensus standards.

This proposed rulemaking involves technical standards. EPA proposes to use the 3–A Sanitary Standards, ''Storage Tanks for Milk and Milk Products'', 3A 01–08, November 2001, developed by 3–A Sanitary Standards, Inc. A copy of these standards may be obtained from the 3–A Sanitary Standards online store at *http://www.techstreet.com/3Agate.html;* by contacting the organization at 6888 Elm Street, Suite 2D, McLean, Virginia 22101; by phone at (703) 790–0295; or by facsimile at (703) 761–6284. EPA is proposing an exemption to the SPCC rule based on the 3–A Sanitary Standards, because an owner and operator of a facility that is subject to SPCC, that has milk storage containers and associated piping and appurtenances constructed in accordance with 3–A Sanitary Standards, and that is effectively implementing PMO sanitation requirements, may already be providing measures to prevent, control and provide countermeasures for discharges of oil in quantities that are harmful.

EPA welcomes comments on this aspect of the proposed rulemaking and, specifically, invites the public to identify potentially-applicable voluntary consensus standards and to explain why such standards should be used in this regulation.

J. Executive Order 12898: Federal Actions To Address Environmental Justice in Minority Populations and Low-Income Populations

Executive Order (EO) 12898 (59 FR 7629 (Feb. 16, 1994)) establishes federal executive policy on environmental justice. Its main provision directs federal agencies, to the greatest extent practicable and permitted by law, to make environmental justice part of their mission by identifying and addressing, as appropriate, disproportionately high and adverse human health or environmental effects of their programs, policies, and activities on minority populations and low-income populations in the United States.

EPA has determined that this proposed rule will not have disproportionately high and adverse human health or environmental effects on minority or low-income populations because it does not affect the level of protection provided to human health or the environment. The overall effect of the action is to decrease the regulatory burden on facility owners or operators subject to its provisions.

List of Subjects in 40 CFR Part 112

Environmental protection, Animal fats and vegetable oils, Farms, Milk, Oil pollution, Tanks, Water pollution control, Water resources.

Dated: January 9, 2009.

Stephen L. Johnson,

Administrator.

For the reasons stated in the preamble, the Environmental Protection Agency proposes to amend 40 CFR part 112 as follows:

PART 112—OIL POLLUTION PREVENTION

1. The authority citation for part 112 continues to read as follows:

Authority: 33 U.S.C. 1251 *et seq.*; 33 U.S.C. 2720; and E.O. 12777 (October 18, 1991), 3 CFR, 1991 Comp., p. 351.

Subpart A—[Amended]

2. Amend § 112.1 by adding paragraphs (d)(2)(ii)(G) and (d)(13) to read as follows:

§ 112.1 General applicability.

* * * * *

(d) * * *

(2) * * *

(ii) * * *

(G) The capacity of any milk container and associated piping and appurtenances that are constructed according to current applicable 3–A Sanitary Standards, and that are subject to current applicable Grade ''A'' Pasteurized Milk Ordinance or a State dairy regulatory requirement equivalent to the current applicable Grade ''A'' Pasteurized Milk Ordinance.

* * * * *

(13) Any milk container and associated piping and appurtenances that are constructed according to current applicable 3–A Sanitary Standards, and that are subject to current applicable Grade ''A'' Pasteurized Milk Ordinance or a State dairy regulatory requirement equivalent to the current applicable Grade ''A'' Pasteurized Milk Ordinance.

* * * * *

[FR Doc. E9–830 Filed 1–14–09; 8:45 am]

BILLING CODE 6560–50–P

DEPARTMENT OF THE INTERIOR

Fish and Wildlife Service

50 CFR Part 17

[FWS–R2–ES–2008–0059; MO 9221050083–B2]

Endangered and Threatened Wildlife and Plants; Status Review of the Bald Eagle *(Haliaeetus leucocephalus)* in the Sonoran Desert Area of Central Arizona and Northwestern Mexico

AGENCY: Fish and Wildlife Service, Interior.

ACTION: Notice of continuing information collection for a status review.

SUMMARY: We, the U.S. Fish and Wildlife Service (Service), announce the continuation of information collection on a status review for the bald eagle (*Haliaeetus leucocephalus*) in the Sonoran Desert area of central Arizona and northwestern Mexico, hereafter referred to as the ''Sonoran Desert area bald eagle.'' Through this action, we

encourage all interested parties to provide us with information regarding the status of, and any potential threats to, the Sonoran Desert area bald eagle. Information previously submitted for this status assessment does not need to be resubmitted, and will be incorporated into the public record and fully considered in our status review.

DATES: To allow us adequate time to consider and incorporate submitted information into our review which is due by October 12, 2009, we request that we receive the information on or before July 10, 2009.

ADDRESSES: You may submit information by one of the following methods:

- *Federal eRulemaking Portal: http://www.regulations.gov*. Follow the instructions for comments or submissions.
- *U.S. mail or hand-delivery:* Public Comments Processing, *Attn:* FWS–R2–ES–2008–0059; Division of Policy and Directives Management; U.S. Fish and Wildlife Service; 4401 N. Fairfax Drive, Suite 222; Arlington, VA 22203.

We will not accept e-mail or faxes. We will post all information received on *http://www.regulations.gov*. This generally means that we will post any personal information you provide us (see the Information Solicited section below for more information).

FOR FURTHER INFORMATION CONTACT: Steve Spangle, Field Supervisor, Arizona Ecological Services Office, 2321 West Royal Palm Road, Suite 103, Phoenix, AZ 85021–4951; telephone 602–242–0210; facsimile 602–242–2513. If you use a telecommunications device for the deaf (TDD), call the Federal Information Relay Service (FIRS) at 800–877–8339.

SUPPLEMENTARY INFORMATION:

Information Solicited

To ensure that the status review is complete and based on the best available scientific and commercial information, we are continuing to collect information concerning the status of the Sonoran Desert area bald eagle (*Haliaeetus leucocephalus*). We will use information gained during this process to evaluate whether the Sonoran Desert area bald eagle is a Distinct Population Segment (DPS) as described in our policy on determining a DPS (61 FR 4722, February 7, 1996; DPS Policy), and if listing as threatened or endangered is warranted under the Endangered Species Act of 1973, as amended (Act) (16 U.S.C. 1531 *et seq.*). If we determine that listing the Sonoran Desert area bald eagle is warranted, we would propose critical habitat to the maximum extent prudent and determinable at the time we prepare a proposed listing rule.

To allow us adequate time to incorporate submitted information into our review, we request that we receive the information on or before July 10, 2009. Because this status review will not result in establishing a rule, this date is an advisory. However, please note that the court has established a deadline of October 12, 2009, for completion of this status review. As a result, the Service must be able to compile, evaluate, and incorporate substantial information into this status review. Therefore, receiving substantial information on or before July 10, 2009, maximizes our ability to incorporate that information into our review.

At this time, we request any additional information from the public, other concerned governmental agencies, Native American Tribes, the scientific community, industry, or any other interested parties on the status of the Sonoran Desert area bald eagle, including:

(1) Information regarding Sonoran Desert area bald eagles' historical and current population status, distribution, and trends; biology and ecology; and habitat selection. We also solicit information of this type on adjacent populations and geographic areas for use in evaluating discreteness and significance of the Sonoran Desert area bald eagle under the Service's DPS Policy.

(2) Information that supports or refutes the appropriateness of considering the Sonoran Desert area bald eagle to be discrete, as defined in the DPS Policy including, but not limited to:

(a) Information indicating whether Sonoran Desert area bald eagles are markedly separated from other populations of bald eagles due to physical, physiological, ecological, or behavioral factors. This may include information regarding bald eagles that hatched in the Sonoran Desert area and that breed with bald eagles that hatched in other locations outside this area, and information regarding the Sonoran Desert area bald eagles' isolation from other breeding populations of eagles.

(b) Information indicating whether or not the Sonoran Desert area bald eagle is delimited by international governmental boundaries within which significant differences in control of exploitation, management of habitat, conservation status, or regulatory mechanisms exist.

(3) Information that supports or refutes the appropriateness of considering the Sonoran Desert area bald eagle to be significant, as defined in the DPS Policy including, but not limited to:

(a) Information indicating whether the ecological setting, including such factors as temperature, moisture, weather patterns, and plant communities, in which the Sonoran Desert area bald eagle persists is unusual or unique when compared to that of bald eagles found elsewhere in North America. This may also include information indicating that the Sonoran Desert area bald eagle has or has not developed adaptations to that unique environment, such as breeding behavior, morphological characteristics, egg development and characteristics, or nest types.

(b) Information indicating whether loss of the Sonoran Desert area bald eagle would or would not result in a significant gap in the range of the taxon.

(c) Information indicating whether the Sonoran Desert area bald eagle differs markedly from other populations of bald eagles in its genetic characteristics.

(4) Information regarding the availability of suitable, but unoccupied, breeding habitat that might allow for expansion of the Sonoran Desert area bald eagle populations. This may include information on areas outside of the boundaries delineated for the Sonoran Desert area bald eagle in our May 1, 2008, final listing rule (73 FR 23966).

(5) Information on the effects of potential threat factors to the Sonoran Desert area bald eagle populations that are the basis for a listing determination under section 4(a) of the Act, which are:

(a) The present or threatened destruction, modification, or curtailment of the Sonoran Desert area bald eagle's breeding habitat or range, including but not limited to the effects on habitat from: water management (river diversions, dams, dam operations, surface and groundwater withdrawals); human population growth and accompanying increases in water demands; human recreation; reduced riparian health and regrowth of streamside trees for nesting, foraging, and roosting; urban development; and climate change;

(b) Overutilization for commercial, recreational, scientific, or educational purposes;

(c) Disease or predation, including but not limited to the effects of avian pox or West Nile virus, Mexican chicken bugs, or ticks;

(d) The inadequacy of existing regulatory mechanisms, including but not limited to adequacy or inadequacy of funding for ongoing management; and the adequacy or inadequacy of

protections under the Bald and Golden Eagle Protection Act and the Migratory Bird Treaty Act; and

(e) Other natural or manmade factors affecting its continued existence, including but not limited to information on: Productivity, survival, and mortality rates of this population; the occurrence and effect of inbreeding; effects to Sonoran Desert area bald eagles while outside the Sonoran Desert area; effects to Sonoran Desert area bald eagles' prey base and productivity, including effects of nonnative predatory fish and native fish restoration; effects of low-flying aircraft; the presence and abundance of pesticides and contaminants such as lead, mercury, or dichlorodiphenyldichloroethylene (DDE); the effects of climate change; and the effects from eggshell thinning.

(6) Information supporting the existing boundary developed in our May 1, 2008, final listing rule (73 FR 23966) for Sonoran Desert area bald eagles under consideration in this status review, or information indicating that the boundary should be modified.

If you submitted information in response to our notice of initiation of a status review, which was published in the **Federal Register** on May 20, 2008 (73 FR 29096), you do not need to resend it. We will include the submission in the public record, and we will consider the information in the preparation of our status review.

You may submit your information concerning this status review by one of the methods listed in the **ADDRESSES** section. We will not consider submissions sent by e-mail or fax or to an address not listed in the **ADDRESSES** section.

If you submit information via *http://www.regulations.gov*, your entire submission—including any personal identifying information—will be posted on the Web site. If you submit personal identifying information, you may request at the top of your document that we withhold this personal identifying information from public review. However, we cannot guarantee that we will be able to do so. We will post all hardcopy submissions on *http://www.regulations.gov*.

Information and materials we receive, as well as supporting documentation we used in preparing this notice, will be available for public inspection on *http://www.regulations.gov*, or by appointment, during normal business hours, at the U.S. Fish and Wildlife Service, Arizona Ecological Services Office (*see* **FOR FURTHER INFORMATION CONTACT**).

Background

Section 4(b)(3)(B) of the Act requires that, for any petition to revise the Lists of Threatened and Endangered Wildlife and Plants that contains substantial scientific or commercial information that the action may be warranted, we make a finding within 12 months of the date of the receipt of the petition on whether the petitioned action is: (a) Not warranted, (b) warranted, or (c) warranted but precluded by other pending proposals. Such 12-month findings are to be published promptly in the **Federal Register**.

Federal actions taken prior to May 2008 are described in a notice of initiation of a status review of the Sonoran Desert area bald eagle, which was published in the **Federal Register** on May 20, 2008 (73 FR 29096). On August 27, 2008, the U.S. District Court for the District of Arizona granted the Center for Biological Diversity and Maricopa Audubon Society's unopposed motion to amend the previous court order (*Center for Biological Diversity* v. *Kempthorne*, CV 07–0038–PHX–MHM (D. Ariz.)) to extend the completion date of the bald eagle status review to October 12, 2009. Included in the motion submitted to the court were declarations discussing the need for additional time for Native American Tribes to compile and submit information.

At this time, we are soliciting new information on the status of and potential threats to the Sonoran Desert population of bald eagles. We will base our new determination as to whether listing is warranted on a review of the best scientific and commercial information available, including all such information received as a result of this notice. For more information on the biology, habitat, and range of the Sonoran Desert population of bald eagles, please refer to our previous 90-day finding published in the **Federal Register** on August 30, 2006 (71 FR 51549), and our final delisting rule for the bald eagle published in the **Federal Register** on July 9, 2007 (72 FR 37346).

Author

The primary authors of this notice are the staff members of the Arizona Ecological Services Office.

Authority

The authority for this action is the Endangered Species Act of 1973 (16 U.S.C. 1531 *et seq.*).

Dated: January 7, 2009.

Kenneth Stansell,

Acting Director, U.S. Fish and Wildlife Service.

[FR Doc. E9–552 Filed 1–14–09; 8:45 am]

BILLING CODE 4310–55–P

DEPARTMENT OF COMMERCE

National Oceanic and Atmospheric Administration

50 CFR Parts 253 and 600

[Docket No. 080228332–81199–01]

RIN 0648–AW38

Magnuson-Stevens Act Provisions; Interjurisdictional Fisheries Act; Disaster Assistance Programs; Fisheries Assistance Programs

AGENCY: National Marine Fisheries Service (NMFS), National Oceanic and Atmospheric Administration (NOAA), Commerce.

ACTION: Proposed rule; request for comments.

SUMMARY: In accordance with the Magnuson-Stevens Fishery Conservation and Management Act (MSA), as amended, and the Interjurisdictional Fisheries Act (IFA), NMFS (on behalf of the Secretary of Commerce) proposes regulations to govern the requests for determinations of fishery resource disasters as a basis for acquiring potential disaster assistance. The regulations would establish definitions, and characteristics of commercial fishery failures, fishery resource disasters, serious disruptions affecting future production, and harm incurred by fishermen, as well as requirements for initiating a review by NMFS, and the administrative process it will follow in processing such applications. The intended result of these procedures and requirements is to clarify and interpret the fishery disaster assistance provisions of the MSA and the IFA through rulemaking and thereby ensure consistency and facilitate the processing of requests.

DATES: Comments must be submitted in writing on or before February 17, 2009.

ADDRESSES: You may submit comments, identified by 0648–AW38, by any one of the following methods:

- *Electronic Submissions:* Submit all electronic public comments via the Federal eRulemaking Portal: *http://www.regulations.gov;*
- *Fax:* 301–713–1193, Attn: Robert Gorrell;
- *Mail:* Alan Risenhoover, Director, NMFS Office of Sustainable Fisheries,

Attn: Disaster Assistance Program Guidance and Procedures, 1315 East-West Highway, SSMC3, Silver Spring, MD 20910.

Written comments regarding the burden-hour estimates or other aspects of the collection-of-information requirements contained in this proposed rule may be submitted to Alan Risenhoover at the above address and by e-mail to *David-Rostker@omb.eop.gov,* or by fax to (202) 395–7285.

Instructions: All comments received are a part of the public record and will generally be posted to *http://www.regulations.gov* without change. All Personal Identifying Information (for example, name, address, etc.) voluntarily submitted by the commenter may be publicly accessible. Do not submit Confidential Business Information or otherwise sensitive or protected information.

NMFS will accept anonymous comments. Attachments to electronic comments will be accepted in Microsoft Word, Excel, WordPerfect, or Adobe PDF file formats only.

FOR FURTHER INFORMATION CONTACT: Robert Gorrell, at 301–713–2341 or via e-mail at *robert.gorrell@noaa.gov.*

SUPPLEMENTARY INFORMATION: The Secretary of Commerce or his/her designee (Secretary) can provide disaster assistance under sections 312(a) or 315 of the Magnuson-Stevens Fishery Conservation and Management Act (MSA) (16 U.S.C. 1861, 1864), as amended, and under sections 308(b) or 308(d) of the Interjurisdictional Fisheries Act (IFA) (16 U.S.C. 4107), after Congress appropriates funds for such purpose. This proposed rule would provide guidance and procedures for either initiating or evaluating requests for fisheries disaster assistance under these two statutes, but does not include provisions for grants or other types of financial assistance and disaster aid. This proposed rule would apply to both Federal and state coastal commercial fisheries and does not apply to recreational fisheries. Recreational fisheries determined to be part of a fishing community may participate in assistance depending on the individual disaster assistance plans. The proposed rule also supplements and modifies existing regulations at subpart C of 50 CFR 253 governing disaster assistance under the IFA. Until this rule, NMFS has not published regulations to govern disaster assistance under the MSA.

Magnuson-Stevens Fishery Conservation and Management Act (MSA)

Section 312(a) states that the Secretary, at his discretion or upon request of a governor of an affected state or a fishing community, ''shall determine whether there is a commercial fishery failure due to a fishery resource disaster.'' Upon making such a determination, the Secretary is authorized to make funds available ''for assessing the economic and social effects of the commercial fishery failure, or any activity that the Secretary determines is appropriate to restore the fishery or prevent a similar failure in the future and to assist a fishing community affected by such failure.'' For assistance to be provided under section 312(a), a commercial fishery failure must be shown to have occurred due to a fishery resource disaster of natural or undetermined causes or man-made causes beyond the control of fishery managers to mitigate through conservation and management measures, including regulatory restrictions (including those imposed as a result of judicial action) imposed to protect human health or the marine environment.

Although this rule does not contain provisions for awarding grants or other types of financial assistance and disaster aid, the reader may be interested that under section 312(a), the Federal share of the cost of any activity cannot exceed 75 percent. The Secretary is authorized to make sums available to be used by the affected State, by the fishing community, or by the Secretary in cooperation with the affected State or fishing community for assessing the economic and social effects of the commercial fishery failure, or any activity that the Secretary determines is appropriate to restore the fishery or prevent a similar failure in the future and to assist a fishing community affected by such failure. Before making funds available for an activity authorized under this section, the Secretary must make a determination that such activity will not expand the size or scope of the commercial fishery failure in that fishery or into other fisheries or other geographic regions.

Effective January 12, 2007, the Magnuson-Stevens Fishery Conservation and Management Reauthorization Act of 2006 (MSRA)(PL 109–479) amended section 312(a) of the MSA and added a new section 315. At the request of the Governors of affected states, section 315 authorized the Secretary to establish a regional economic transition program to provide disaster relief assistance to fishermen, charter fishing operations, United States processors, and owners of related fishery infrastructure affected by a ''catastrophic regional fishery disaster.'' Subject to the availability of appropriations, the regional economic transition program must provide funds or other economic assistance for disbursement to affected entities in meeting immediate regional shoreside infrastructure needs, financial assistance and job training, fishing capacity reduction, and other activities authorized under MSA 312(a) or IFA 308(d). The amendment also allows for waiver of non-Federal matching requirements in catastrophic regional fishery disasters if the Secretary determines no reasonable means are available for applicants to meet the matching requirement and that the probable benefit of 100 percent Federal financing outweighs the public interest of imposing a matching requirement.

Interjurisdictional Fisheries Act (IFA)

IFA section 308(b) authorizes the Secretary to provide grants or cooperative agreements to states determined to have been affected by a commercial fishery failure or serious disruption affecting future production due to a fishery resource disaster arising from natural or undetermined causes. Although this rule does not contain provisions for awarding grants or other types of financial assistance and disaster aid, the reader may be interested that IFA section 308(b) and 50 CFR section 253.23(a)(1) contain provisions for section 308(b) assistance and state that the Federal share of the cost of any activity cannot exceed 75 percent. The Secretary may distribute these funds after making a thorough evaluation of the scientific information submitted and determining that a commercial fishery failure due to a fishery resource disaster arising from natural or undetermined causes has occurred. Funds may only be used to restore the resource affected by the disaster, and only by existing methods and technology.

IFA section 308(d) enables the Secretary to help persons engaged in commercial fisheries by initiating projects or other measures to alleviate harm determined by the Secretary to have been incurred as a direct result of a fishery resource disaster arising from a hurricane or other natural disaster. Eligibility for direct assistance under this subsection is limited to any person having less than $2,000,000 in net revenues annually from commercial fishing, as determined by the Secretary. IFA section 308(d) and subpart C of 50 CFR part 253.23(2) contain provisions for section 308(d) assistance and states that funds provided under section 308(d) must undergo formal notice and opportunity for public comment on the appropriate limitations, terms, and conditions for awarding assistance.

There is no matching requirement for recipients under section 308(d).

Intent of This Action

The Sustainable Fisheries Act of 1996 amended the MSA by adding section 312(a). Since then, NMFS has processed requests for section 312(a) determinations of a ''commercial fishery failure due to a fishery resource disaster'' on a case-by-case basis. NMFS recently developed policy and administrative procedures which are found in the NMFS Policy Directives System (PDS) at *http://reefshark.nmfs.noaa.gov/f/pds/publicsite/index.cfm* to provide internal guidance when undergoing an MSA section 312(a) review. The procedures also addressed review of requests made under the IFA. This proposed rule largely incorporates this policy and accompanying procedures and addresses new requirements under the reauthorized MSA. The intent of this proposed rule is to provide more certainty as to how to qualify for a positive determination under either the MSA or the IFA.

This rule proposes procedures and requirements for initiating, evaluating, and deciding requests for determinations of fishery resource disasters. The proposed rule would establish definitions, characteristics of commercial fishery failures and fishery resource disasters, requirements for initiating a review by NMFS, and the criteria NMFS will use in evaluating such requests.

These proposed procedures and requirements also would guide any fisheries disaster determinations considered at the discretion of the Secretary under the authority of sections 312(a) and 315 of the MSA and sections 308(b) and 308(d) of the IFA.

Definitions

In section 600.1502, the proposed rule sets forth definitions of terms used in implementing sections 312(a) and 315 of the MSA and sections 308(b) and 308(d) of the IFA. Some definitions are repeated from the MSA and the IFA. Others define terms used in the MSA but not defined in the IFA. The term ''commercial fishery failure'' for purposes of implementing the IFA under this subpart is defined differently from under the current section 253.20. This rule also replaces the definition of ''commercial fishery failure'' in 50 CFR 253.20 to ensure that the Secretary is uniformly applying the term when evaluating requests for disaster assistance under either the MSA or the IFA. Other terms are newly established. Five particularly important terms—''commercial fishery failure'', ''fishery resource disaster'', ''man-made causes'', ''natural causes'', and ''undetermined causes''—are defined in section 600.1502 but are also discussed elsewhere in this preamble.

Determining a Commercial Fishery Failure or Determining a Serious Disruption Affecting Future Production of a Fishery or Determining Harm Due to a Fishery Resource Disaster Three-Pronged Test

Section 600.1503 of the proposed rule contains key requirements for the Secretary to make a positive determination of a commercial fishery failure, serious disruption affecting future production of a fishery, or harm due to a fishery resource disaster under MSA section 312(a) and IFA sections 308(b) and (d). In making this determination, every request for fisheries disaster assistance must meet the appropriate three-pronged test: (1) There must have been a fishery resource disaster within the meaning of the MSA or IFA and these regulations; (2) the cause for the fishery resource disaster resulting in a commercial fishery failure or serious disruption affecting future production of a fishery must have been one of the allowable causes identified in either the MSA or IFA and these regulations; and (3) there must be economic impact stemming from the fishery resource disaster which supports a determination of a commercial fishery failure under MSA section 312(a) and IFA section 308(b) and these regulations; or, in the case of IFA section 308(b), a determination of a serious disruption affecting future production of a fishery.

Under section 308(d) of the IFA, it is not necessary for the Secretary to determine a commercial fishery failure or a serious disruption affecting future production but only a determination of harm to persons engaged in commercial fisheries incurred as a direct result of a fishery resource disaster arising from a hurricane or other natural disaster. Section 600.1503(f) of the proposed rule contains requirements for the Secretary to make a positive determination of harm incurred as a result of a fishery resource disaster under section 308(d) of the IFA.

Establishing the Existence of a Fishery Resource Disaster

Section 600.1503(b) of the proposed rule contains requirements for meeting the first test, identifying a fishery resource disaster. While a substantial decrease in the number of available fish (i.e., a stock crash) would clearly appear to fall within the definition of a fishery resource disaster, NMFS interprets the term more broadly. The term ''fishery resource'' is defined in the MSA to include both the fish themselves and fishing. Therefore, NMFS is defining the term ''fishery resource disaster'' to include impediments to fishing not just stock collapses. The proposed rule would define a ''fishery resource disaster'' to mean a sudden and unexpected large decrease in fish stock biomass or other event that results in the loss of essentially all access to the fishery resource, such as loss of fishing vessels and gear, for a substantial period of time in a specific area.

NMFS believes that a reasonably predictable, foreseeable, and recurrent fishery resource cycle of variations in species distribution or stock abundance does not constitute a fishery resource disaster, since normal fluctuations are an expected component of participating in a commercial fishery. Loss of access to a specific fishery resource is the key factor and it must be for a substantial period of time or for the foreseeable future, except for negligible fishing.

In concluding whether a fishery resource disaster has occurred, the Secretary will consider, among other things, whether the fishery resource biomass has precipitously declined or ''crashed''. Landings, stock status, and other data supporting such a decline or crash will need to be evaluated. The Secretary will also consider other biological and environmental information regarding access to the fishery. For instance, in a public health emergency, such as a red tide event, fishermen may be precluded from catching an otherwise healthy stock of fish because that fish has a bacteria harmful to humans. In other cases, a hurricane may destroy the majority of boats and gear of a fishing fleet. In both cases, there could be a fishery resource disaster without a stock collapse because the fishermen could not access the population either due to an unanticipated human health issue or due to the unexpected destruction of fishing equipment. Accordingly, the loss of access to a fish population is a broader and better test for a fishery resource disaster than a test that focuses solely on the biological population levels of the subject stock.

Damage or loss of spawning habitat or refugia may also result in a fishery resource disaster, but again the key factor will be whether that damage or loss prevents access to harvest fishery resources for a substantial period of time or for the foreseeable future.

NMFS considered whether to include an economic test as part of the criteria for concluding whether there was a

fishery resource disaster, given that the definition of ''fishery resource'' includes fishing and therefore implies consideration of the fishing industry. However, doing so would co-mingle the concept of fishery resource disaster in the first prong of the three-prong test with the concept of a commercial fishery failure in the third prong. Because the economic effects of the disaster are taken into account as part of the commercial fishery failure, NMFS chose to focus on loss of access as the appropriate test under the first prong. As such, an event precluding all access to a fishery could be a fishery resource disaster but not necessarily a commercial fishery failure unless the fishery suffers sufficient economic loss to meet the test in the third prong as described below.

For the Secretary to conclude that a fishery resource disaster has occurred, the Secretary's analysis may include, among other things, information provided by fishery stock assessments, landings data, assessments of storm damage to habitat, and documents evidencing lost vessels and gear.

Causes—Natural, Man-Made, or Undetermined

In order for the Secretary to make a positive determination, the cause of the fishery resource disaster must meet one of the requirements mentioned in the statutes. Section 600.1503(c) of the proposed rule contains standards for meeting this second-prong test. Natural causes are defined in the proposed rule to mean a weather-, climate-, or biology-related event (e.g., hurricane, flood, drought, El Ninnõ effects on water temperature, or disease). This definition is intended to cover all known events that can occur in nature, but do not include interference by human beings. ''Natural causes'', as defined by these regulations, is a basis for fishery resource disaster determinations under MSA section 312(a) and IFA sections 308(b) and 308(d).

Prior to the amendments in the reauthorized MSA in January 2007, section 312(a) discussed man-made causes by stating the Secretary must determine whether there is a commercial fishery failure due to a fishery resource disaster as a result of ''man-made causes beyond the control of fishery managers to mitigate through conservation and management measures.''

In the reauthorized MSA, however, Congress added a phrase stating that regulatory restrictions imposed to protect human health and the marine environment could provide the basis for a fishery resource disaster. The new language is preceded by the phrase ''including,'' which indicates that the new language describes a subset of the types of man-made causes that could support a positive determination. Moreover, the new language identifies two distinct categories of regulatory restrictions: (1) those imposed to protect human health; and (2) those imposed to protect the marine environment.

Regulations precluding access to fisheries due to public health concerns are a legitimate basis for a fishery resource disaster. For instance, at the request of the Food and Drug Administration, the Secretary closed a large area in Maine to shellfish fishing because of a massive red tide in 2005. In that situation, the stock was biologically robust but harvest was precluded because consuming the shellfish posed a human health risk. The underlying cause of the access preclusion (the red tide) was outside the ability of the fishery managers to control and it may not have been possible to mitigate for the closure by allowing greater fishing effort in other areas.

There are instances where NOAA and other agencies sometimes implement regulations precluding access to fisheries in order to protect the marine environment. For example, closures designed to protect marine mammals or associated with National Marine Sanctuaries or presidentially declared national monuments could potentially be considered an appropriate basis for a fisheries resource disaster. Unfortunately, the statutory language is ambiguous in that it is not obvious on the face of the statute what types of regulatory restrictions are ''imposed to protect the marine environment.'' The statute does not define what it means to implement regulations to protect the marine environment or even provide a definition of the marine environment and there is little guidance in the legislative history. Although in common usage, it might seem appropriate to include stocks of fish in the definition of marine environment, this interpretation is problematic in the broader context of the MSA.

The MSA defines the term ''conservation and management'' to refer to ''all of the rules, regulations, conditions, methods, and other measures (A) which are required to rebuild, restore, or maintain, and which are useful in rebuilding, restoring, or maintaining, any *fishery resource and the marine environment*'' (emphasis added). NMFS concludes, by using the distinct terms ''fishery resource'' and ''marine environment,'' that Congress intended ''marine environment'' to have a different meaning from ''fishery resource.'' Therefore, ''fishery resource'' is not part of the ''marine environment'' as the term is used in the MSA. Since the ''marine environment'' is distinct from ''fisheries resource'', a regulation implemented to protect a fishery resource is not a regulatory restriction imposed to protect the ''marine environment'' under Section 312(a). Therefore, fishery rebuilding regulations could not constitute the basis for finding a ''fishery resource disaster'' under Section 312(a) of the MSA. In this context, and for purposes of determining the causes of a fishery resource disaster, ''marine environment'' is defined to consist of: ''(a) Ocean or coastal waters (note: coastal waters may include intertidal areas, bays, or estuaries); (b) an area of lands under ocean or coastal waters; or (c) a combination of the above.''

NMFS's interpretation is also consistent with the statute's specification that man-made causes, including regulatory restrictions, may be the basis for a fishery resource disaster only if they are ''beyond the control of fisheries managers to mitigate through conservation and management measures.'' Clearly, regulatory restrictions implemented for conservation and management of a fishery such as area closures or direct effort controls, including those designed to prevent overfishing and rebuild the fishery, can preclude access to the fishery. However, it is difficult to characterize regulatory restrictions imposed by fishery managers as being ''beyond the control of fishery managers to mitigate through conservation and management measures.''

When fishery managers implement regulatory restrictions to prevent overfishing, the managers are mitigating the harm that will inevitably occur if the fishery continues unconstrained overfishing. Any regulation designed to end overfishing will result in loss of access to the resource. By restricting fishing levels such that overfishing does not occur, fishery managers are creating short-term access loss in order to avoid the much more substantial long-term access losses that would result from a stock collapse. Therefore, fishery management regulations are the tool used by fishery managers to control and mitigate the fishery resource disaster that will be caused by continued overfishing.

NMFS's interpretation is also consistent with the overall structure, context, and purposes of the MSA. Interpreting section 312 to permit a fishery resource disaster finding for regulations imposed to meet the statutory mandate to end overfishing

and rebuild overfished stocks would also create perverse disincentives to follow the law and end overfishing. When Congress passed the Sustainable Fisheries Act in 1996, it included extensive provisions related to overfishing and rebuilding. And when it reauthorized the MSA in 2007, a principal purpose was to end overfishing. That simply cannot be accomplished without decreasing fish harvests in some manner. However, providing disaster assistance because a fishery has continued overfishing would discourage responsible fishing practices. NMFS does not believe as a matter of policy that the statute should be interpreted in a manner that would undermine the fundamental purpose of the MSA to ensure sustainable fishing into the future. Without a fishery resource disaster and causes consistent with the MSA or IFA requirements, regulatory restrictions to protect the sustainability of fishing are not a basis for compensation under MSA section 312(a).

Man-made causes are defined in the proposed rule to mean events or activities caused by humans that could not have been prevented or addressed by fishery management measures and that are otherwise beyond the control of fishery managers to mitigate through conservation and management measures (e.g., oil spill), except for regulatory restrictions or judicial actions imposed to protect human health or the marine environment. ''Man-made causes'' applies only to determinations under MSA section 312(a), and not to IFA section 308(b) and IFA section 308(d). ''Undetermined causes'' are defined in the proposed rule to mean ''causes in which the current state of knowledge does not allow the identification of the exact cause or causes; however, fishing restrictions to end overfishing, overfishing, or inadequate harvest controls cannot be the basis for making a fishery disaster determination.'' If overfishing has occurred in the 5-year period immediately preceding a disaster claimed to be caused by ''undetermined causes'', the Secretary will presume that overfishing or inadequate harvest controls was the cause of the claimed disaster, unless the requester demonstrates otherwise. As noted above, NMFS interprets the statute to provide that regulatory restrictions designed to prevent overfishing and rebuild the fishery may not serve as a basis for finding a fishery resource disaster resulting from ''man-made causes.'' Nearly all commercial fisheries in the 200-mile Exclusive Economic Zone are subject to Federal (principally NMFS) management designed to conserve and manage the fishery resources and prevent overfishing. In other fisheries, such as State fisheries, NMFS neither regulates nor collects data to determine whether overfishing is occurring, and hence, the requester must demonstrate that the loss of access was not caused by overfishing, fishing restrictions to end overfishing, or inadequate harvest controls. In this context, it is vital that NMFS establish safeguards to ensure that the ''undetermined causes'' criterion is not used as a back-door to obtain fishery resource disaster determinations that otherwise would be precluded. At the same time, NMFS wants to ensure that appropriate relief is available where a fishery resource disaster results from undetermined causes unrelated to harvest restrictions designed to conserve and manage the fishery resource. Therefore, any requester claiming undetermined causes must demonstrate why a fishery resource disaster (i.e., the loss of essentially all access to the fishery resource for a substantial period of time) was not caused by overfishing, fishing restrictions to end overfishing, or inadequate harvest controls.

''Undetermined causes'' applies to determinations made under both MSA section 312(a) and IFA section 308(b), but not to IFA section 308(d).

Determination of a Commercial Fishery Failure or a Serious Disruption Affecting Future Production of a Fishery

Section 600.1503(d) of the proposed rule contains requirements for meeting the test in the third prong.

A. *Commercial Fishery Failure under MSA Section 312(a) and IFA Section 308(b).* The proposed rule would define a ''commercial fishery failure'' to mean: (1) When the 12-month revenues from commerce in the fishery (which is dependent on the fishery resource subject to a fishery resource disaster) have decreased by 80 percent or more compared to the average for the immediately preceding 5-year period; or (2) when the 12-month revenues from commerce in the fishery (which is dependent on the fishery resource subject to a fishery resource disaster) have decreased by at least 35 percent compared to the average for the immediately preceding 5-year period, and the economic impacts are severe and are beyond the normal range of annual revenue fluctuations in the fishery compared with the immediately preceding 5-year period. Increased costs, e.g., increased fuel and other energy costs, cannot be the basis for a positive determination of a commercial fishery failure. In determining whether economic impacts are severe, the Secretary will consider, among other things, the degree of economic hardship suffered by those directly engaged in the commercial fishery, but not the community at large. The Secretary will also consider the degree to which those impacts are offset by mitigating circumstances, including other commercial fishing opportunities for the affected fishermen. A decrease in 12-month revenues of less than 35 percent compared to the average of the 5-year period immediately preceding the disaster will not support a positive determination.

It is NMFS's best judgment that the 5 most recent years is the appropriate comparison period, and that the 35 percent and 80 percent decrease in revenues are the appropriate levels in making determinations. Given the wide variance in life cycles of the many fish species, changes in harvestable biomass, price fluctuations with changes in supply, and other variables impacting fishery revenues, a 5-year average is believed to be a reasonable comparison. It is a long enough time period to allow the Secretary to gauge a reduction in annual fishing revenues and to determine whether the decline in revenues is sudden. Less than 5 years does not allow the Secretary to account for normal short-term variations. If it is longer than 5 years, the relevance to conditions existing at the time of the disaster becomes more tenuous. NMFS would be particularly interested in receiving comments on this. If you do not believe using the immediately preceding 5-year period is appropriate for comparison, tell us why.

While a reduction in revenue of less than 35 percent could be significant, under the proposed rule it would not result in a commercial fishery failure. A reduction in revenues of less than 35 percent may be absorbed over a few years whereas a reduction in revenues of 35 percent or greater could take a substantially longer period of time to offset.

On the other hand, a reduction in revenues of 80 percent or more likely will result in an economic failure for fishery participants and could take several years to absorb. At this level, all economic activity is likely ultimately to diminish. NFMS would also be particularly interested in receiving comments on using 35 percent and 80 percent thresholds. If you do not think these are the appropriate thresholds, tell us why.

In all instances, in order for NMFS to be able to complete its analysis under the statutes, it must have a clear

understanding of which stock or stocks of fish constitute the fishery in which a commercial fishery failure determination is sought. The requester will be responsible for identifying the commercial fishery as well as the geographical boundaries of the fishery.

In cases of revenue decreases between 35 and 80 percent, the extent to which revenues must decrease for a commercial fishery failure to be found will vary among fisheries. Within this range, a commercial fishery failure must be determined on a case-by-case basis because each fishery is different and revenues fluctuate widely, and cannot be defined universally. The Secretary will consider, among other things, information provided on revenues, landings data, prices, actual losses, and market conditions. The Secretary will consider the average revenue information for the 5-year period immediately preceding the fishery resource disaster. Other factors to consider are the magnitude of the fishery (e.g., the timing and scope of a small, localized fishery may present a very different situation from coastwide fisheries) and other opportunities for the affected fishermen. For example, fishermen may be able to offset revenue declines in one fishery by increasing revenues from another fishery.

B. *Serious Disruption under IFA Section 308(b).* The proposed rule would define ''serious disruption affecting future production'' to mean ''a non-cyclical sudden and precipitous decrease in harvestable biomass or spawning stock size of a fish stock that limits access to the fishery for a substantial period of time in a specific area.'' In making a determination of a serious disruption affecting future production of a fishery, the proposed rule would require the Secretary to consider the estimated decrease in harvestable biomass or spawning stock size of the fish targeted by the fishery affected by the disaster arising from natural or undetermined causes. The Secretary will issue a determination of a serious disruption affecting future production if he/she finds that the harvestable biomass or spawning stock size of the fish targeted by the fishery (which is dependent on the fishery resource subject to a fishery disaster) has decreased by 80 percent or more compared to the average for the 5-year period immediately preceding the disaster. If the harvestable biomass or spawning stock size of the fish targeted by the fishery has decreased at least 35 percent compared to the average for the immediately preceding 5-year period, the Secretary will review the circumstances. The Secretary will make his/her decision based on the severity of the serious disruption affecting future production of the fishery. In reaching a determination, the Secretary will consider, among other things, most recent trawl surveys and other fishery resource surveys conducted by NMFS and/or state officials, as well as most recent stock assessments and other indicators of future production from the fishery. The Secretary believes these are the appropriate parameters, based on the reasoning in the prior section.

Repetitive Requests Not Allowed: One Positive Commercial Fishery Failure or Serious Disruption Determination per Fishery Resource Disaster

Section 600.1503(e) of the proposed rule would prevent repetitive requests for commercial fishery failure determinations or serious disruption affecting future production determinations due to the same fishery resource disaster, once a positive determination has been made. There are several reasons to propose this. Repetitive requests based on the same fishery resource disaster do not provide additional benefits for the fishermen because Congress can respond to the determination by appropriating money, or subsequently appropriating additional money if the disaster relief was insufficient. It is also a waste of resources to entertain repetitive requests. In many instances the fishery resource will take years to recover and reviewing repetitive requests only to come to the same conclusion is a waste of government resources.

In the past, the Secretary has received multiple requests over several years to determine a commercial fishery failure based on the original fishery resource disaster that occurred years earlier. For example, the St. Paul snow crab fishery in the Eastern Bering Sea, has depended on the snow crab resource, which failed several years ago and has not rebuilt. The Secretary twice made a commercial fishery failure determination (in different years) due to a fishery resource disaster in that fishery. The proposed rule would prevent repeated determinations.

Under the proposed rule, once the Secretary has made a positive commercial fishery failure determination based on a fishery resource disaster under either MSA section 312(a) or IFA section 308(b), he/she may not make a commercial fishery failure determination in any subsequent year based on the same fishery resource disaster. The proposed rule would also disallow repetitive requests for determinations of a serious disruption affecting future production under section 308(b) of the IFA based on the same fishery resource disaster on which a positive determination has already been made.

For the Secretary to make a new commercial fishery failure or serious disruption determination in a fishery for which an earlier positive determination was made, or in substantially the same fishery, there must be a new triggering event based on new data that evidences an appreciable change in the fishery resource and the economic conditions of the commercial fishery. The change must show that there has been a new cause of the restriction on access to the fishery resource, different from the earlier determination. Additionally, the commercial fishery failure must be measured from the circumstances occurring after the last determination.

Determination of Harm Incurred Under IFA Section 308(d)

Section 308(d) of the IFA authorizes the Secretary to help persons engaged in commercial fisheries, either by providing assistance directly to those persons or by providing assistance indirectly through states and local government agencies and nonprofit organizations, for projects or other measures to alleviate harm determined by the Secretary to have been incurred as a direct result of a fishery resource disaster arising from a hurricane or other natural disaster. Section 600.1503(d) of the proposed rule would define ''harm'' to mean ''uninsured physical damage or economic loss to fishing vessels, fishing gear, processing facilities, habitat, marketability or infrastructure (i.e. port facilities for landing or unloading catch) suffered as a direct result of a fishery resource disaster arising from a hurricane or other natural disaster and measured in economic terms.'' This is defined in Subpart C of 50 CFR 253.23(a)(2)and in our experience, has been an appropriate measure of harm.

One Harm Incurred Determination per Fishery Resource Disaster

Section 600.15403(g) of the proposed rule would prevent repetitive requests for determinations of harm incurred under IFA section 308(d) based on the same fishery resource disaster on which a positive determination has already been made. The reasons for NMFS to propose this are the same as those reasons for disallowing repetitive requests for determinations of a commercial fishery failure or serious disruption based on the same fishery resource disaster. Repetitive requests based on the same disaster do not provide additional benefits for the

fishermen because Congress can respond to the determination by appropriating additional money if the disaster relief was insufficient. It is also a waste of resources to entertain repetitive requests. In many instances the fishery resource will take years to recover and reviewing repetitive requests only to come to the same conclusion is a waste of government resources.

For the Secretary to make a new determination of harm incurred in a fishery for which an earlier positive determination was made, there must be a new triggering event based on new data that evidences an appreciable change in the fishery resource and there must be a showing of new harm incurred based on the average revenues during the most recent 5-year period. NMFS believes this is an appropriate time period based on the reasoning in the previous section.

Regional Catastrophic Fishery Failure Under MSA Section 315

Section 600.1503(h) sets forth requirements for a positive determination of a regional catastrophic fishery failure. Under section 315 of the Magnuson-Stevens Act, a catastrophic regional fishery disaster affects more than one state or a major fishery managed by a Regional Fishery Management Council or interstate fishery commission.

A major fishery is defined as a fishery in Federal waters affecting fishermen in more than 1 state or territory. In order to ensure that the request actually covers a major fishery, requests for a determination of a Regional Catastrophic Fishery Failure must be submitted in writing by two or more Governors in a joint letter to the Secretary.

Further, requests for a determination of a regional catastrophic fishery failure under section 315 of the Magnuson-Stevens Act must meet all of the requirements for a determination under section 312(a) of the Magnuson-Stevens Act or section 308(d) of the Interjurisdictional Fisheries Act and comply with all requirements of § 600.1504.

In determining whether there has been a catastrophic regional fishery disaster, the Secretary must conclude that the severity of the economic impacts on the coastal or fishing communities are beyond the normal range of average revenues during the most recent 5-year period.

Initiating an Evaluation Request

Where a Governor or an elected or politically-appointed representative of the affected fishing community (i.e., mayor, city manager, or county executive) wishes to submit under MSA section 312(a), or at least two Governors under MSA section 315, a written request to the Secretary for fisheries disaster assistance, section 600.1504 of the proposed rule requires a letter containing key information in order for NMFS to initiate an evaluation of the request. Similarly, a request for disaster assistance under sections 308(b) or 308(d) of the IFA would require the same information.

The person(s) requesting disaster assistance is most likely to have the relevant information and, therefore, is responsible for explaining why a commercial fishery failure should be determined and providing documentation supporting the request with the initial letter requesting fisheries disaster assistance from the Secretary under either the MSA or the IFA. The requester must submit 5-year average cost and revenue information and NMFS, in its sole discretion, may request non-government expert review of the economic data. Requesters should also supply the necessary information on the fishery to assist the Secretary in making a determination, including data on actual losses, the number of participants, the number of vessels, and how long they participated in the fishery. The requester also should provide information on the amount of effort in the fishery before the fishery resource disaster occurred. NMFS may request additional information it believes is necessary to determine whether the economic impacts are severe enough to constitute a commercial fishery failure.

The person(s) requesting disaster assistance is most likely to know the rationale for his/her request and is therefore responsible for supplying supporting documentation. This documentation must accompany the initial letter requesting a determination of a fishery resource disaster from the Secretary under either the MSA or the IFA. Requests submitted under either the MSA or the IFA without a rationale and supporting documentation for reaching a conclusion on whether or not there is a fishery resource disaster will be denied. NMFS may require the applicant to submit any additional information it believes is necessary to conclude whether a fishery resource disaster has occurred. This information is needed in order for the Secretary to effectively evaluate the circumstances and impacts to determine if the requirements proposed under section 600.1503 are met.

The initiation letter must include a clear definition of the fishery, including identification of all fish stocks and whether it includes non-Federal fisheries as well as Federal fisheries, and the geographical boundaries of the fishery for which the request is being made. The initiation letter must also include the rationale and supporting documentation as outlined in this preamble and regulatory text, including the eight items found at section 600.1504(a)(2). Any initiation letter submitted must also include the amount of financial assistance needed to alleviate the alleged commercial fishery failure (MSA 312(a) or 315 and IFA 308(b)), the serious disruption affecting future production (IFA 308(b)), or harm incurred (IFA 308(d)), including which groups of fishery participants would be eligible to receive assistance. The applicant should submit any additional information he or she believes relevant to an evaluation of the request. Before submitting the initiation letter, applicants are encouraged to contact the appropriate NMFS regional office informally for help in identifying materials to assist in the evaluation. NMFS will send the requester a letter if additional information is needed to make the determination.

If the request fails to meet any one of the appropriate three prongs outlined above or is otherwise disapproved, NMFS will send the applicant a letter explaining the reasons for disapproving the request. Any new request from the applicant for disaster assistance in the same fishery for which a positive determination has been made must include an explanation of a new fishery resource disaster or a significant change in circumstances including a new 5-year average for impacts in order to warrant a review by NMFS.

Any vessel-specific fishery information submitted to NMFS with a request for a MSA 312(a) or 315 determination would be subject to the confidentiality provisions and limitations of section 402(b) of the MSA and regulations in 50 CFR 600 subpart E. Information submitted with a request for an IFA 308(b) or 308(d) determination will be protected to the extent permitted by statute.

The Secretary or his/her designee may initiate his/her own evaluation and, based on consideration of relevant facts or data, the Secretary's designee may make an internal recommendation to the Secretary for fisheries disaster assistance.

Evaluation Process

Section 600.1505 of the proposed rule provides that the Secretary will conduct

his/her evaluation in accordance with section 600.1503 of this proposed rule. The Secretary will inform the requester of the outcome of his/her evaluation, including reasons for the decision.

In the instance of a ''fast track'' determination where an 80 percent decline in revenues is substantiated, the Secretary will send the requester a positive determination within 30 days of receiving evidence substantiating a decrease of 80 percent if the other two prongs of the test are met. In the instance of a ''standard track'' determination, the Secretary will send the requester a letter of positive or negative determination as soon as practicable.

The Secretary will strive to make a decision on all fisheries disaster assistance requests within 120 days from receipt of a complete application.

Classification

This proposed rule is published under the authority of, and consistent with, the MSA and the IFA.

This proposed rule has been determined to be significant for purposes of Executive Order 12866.

This proposed rule has no impacts on small business entities because of the nature of the rule until a fishery-specific disaster assistance is proposed at some future time.

The Chief Counsel for Regulation of the Department of Commerce certified to the Chief Counsel for Advocacy of the Small Business Administration that this proposed rule, if adopted, would not have a significant economic impact on a substantial number of small entities. The factual basis for this determination is as follows:

The proposed rule would establish guidance and administrative procedures for processing requests for all fisheries disaster assistance requests under the Magnuson-Stevens Act and the Interjurisdictional Fisheries Act. It is not fishery specific. Therefore, the proposed rule has no direct impacts on small business entities. The benefits of this rule in clarifying the fishery disaster assistance provisions of the MSA and the IFA through rulemaking, thereby facilitating the processing of requests, are believed considerable; however, these are not quantifiable without application to specific fisheries. Because the proposed rule conveys broad guidance and is not fishery-specific, this rulemaking does not lend itself to quantitative or even qualitative analysis. Analysis of data and impacts on vessels, vessel revenues, port revenues, fish stock impacts, etc. is not possible in the absence of identifying specific fisheries and disaster assistance fishery components.

As a result, an initial regulatory flexibility analysis is not required and none has been prepared.

This proposed rule would require the submission of information from members of the public who decide to submit fisheries disaster assistance requests to the Secretary. These collection-of-information requirements are subject to review and approval by the Office of Management and Budget (OMB) under the Paperwork Reduction Act (PRA). These requirements have been submitted to OMB for approval. The public's reporting burden includes the time for reviewing instructions, searching existing data sources, gathering and maintaining the data needed, and completing and reviewing the collection-of-information requirements. While preparation time for the NOAA/NMFS requirements will vary with each disaster assistance request, the average preparation time for the requester is estimated to be 40 hours for each disaster assistance request. NMFS expects to receive 4 disaster assistance requests per year. Thus, the total annual burden is estimated to be 160 hours per year. Public comment is sought regarding: Whether the proposed collection of information is necessary for the proper performance of the functions of the agency, including whether the information shall have practical utility; the accuracy of the burden estimate; ways to enhance the quality, utility, and clarity of the information to be collected; and ways to minimize the burden of the collection of information, including through the use of automated collection techniques or other forms of information technology. Send comments on these or any other aspects of the collection of information to NMFS at the above address, and by e-mail to: *David_Rostker@omb.eop.gov* or by fax to 202–395–7285.

Notwithstanding any other provision of law, no person is required to respond to nor shall any person be subject to a penalty for failure to comply with a collection of information subject to the requirements of the PRA unless that collection-of-information displays a currently valid OMB control number.

Persons affected by these regulations should be aware that other Federal and state statutes and regulations may provide additional or alternative sources of fisheries disaster assistance.

List of Subjects

50 CFR Part 253

Disaster assistance, Fisheries, Grant programs—business, Reporting and recordkeeping requirements.

50 CFR Part 600

Fisheries, Fisheries disaster assistance, Fishing, Reporting and recordkeeping requirements.

Dated: January 12, 2009.

James W. Balsiger,

Acting Assistant Administrator for Fisheries.

For the reasons set out in the preamble, NMFS proposes to amend 50 CFR parts 253 and 600 as follows:

PART 253—FISHERIES ASSISTANCE PROGRAMS

1. The authority citation for 50 CFR part 253 continues to read as follows:

Authority: 46 U.S.C. 1271–1279 and 16 U.S.C. 4101 *et seq.*

2. In § 253.20, revise the definition for ''Commercial fishery failure'' to read as follows:

§ 253.20 Definitions.

* * * * *

Commercial fishery failure means either one of the following:

(1) The 12-month revenues from commerce in the fishery (which is dependent on the fishery resource subject to a fishery resource disaster) have decreased by 80 percent or more compared to the average for the immediately preceding 5-year period; or

(2) The 12-month revenues from commerce in the fishery (which is dependent on the fishery resource subject to a fishery resource disaster) have decreased by at least 35 percent compared to the average for the immediately preceding 5-year period, and severe economic impacts have occurred due to such decreased annual revenues and the decline in revenues is beyond the normal range of fluctuation of average annual revenues of the fishery compared with the immediately preceding 5-year period. Decreased revenues not equal to at least a 35 percent decline of revenues over the immediately preceding 5-year period is by definition not a commercial fishery failure.

* * * * *

PART 600—MAGNUSON-STEVENS ACT PROVISIONS

3. The authority citation for 50 CFR part 600 continues to read as follows:

Authority: 5 U.S.C. 561 and 16 U.S.C. 1801 *et seq.*

4. Under part 600, add subpart Q to read as follows:

Subpart Q—Fisheries Disaster Assistance

Sec.

600.1500 Purpose and scope.

600.1501 Relation to other laws.

600.1502 Definitions.
600.1503 Determining a commercial fishery failure or determining a serious disruption affecting future production of a fishery or determining harm due to a fishery resource disaster.
600.1504 Initiating an evaluation request.
600.1505 Evaluation process.
600.1506 [Reserved]
600.1507 [Reserved]
600.1508 [Reserved]
600.1509 [Reserved]
600.1510 [Reserved]

Authority: 16 U.S.C. 1861a, 16 U.S.C. 1864, and 16 U.S.C. 4107.

Subpart Q—Fisheries Disaster Assistance

§ 600.1500 Purpose and scope.

The regulations in this subpart apply to fishery disasters under the authority of sections 312(a) and 315 of the Magnuson-Stevens Fishery Conservation and Management Act (Magnuson-Stevens Act), and under the authority of section 308(b) and 308(d) of the Interjurisdictional Fisheries Act of 1986 (Interjurisdictional Fisheries Act). This subpart provides guidance and implements administrative procedures for disaster assistance under both of these laws, and applies to Federal fisheries and State coastal fisheries.

§ 600.1501 Relation to other laws.

(a) Regulations pertaining to fisheries disaster assistance under the Interjurisdictional Fisheries Act are also set forth in subparts A and C of part 253—Fisheries Assistance Programs of Title 50 of the Code of Federal Regulations.

(b) Persons affected by these regulations should be aware that other Federal and state statutes and regulations may provide additional or alternative sources of fisheries disaster assistance.

§ 600.1502 Definitions.

(a) In addition to the definitions in the Magnuson-Stevens Act and the Interjurisdictional Fisheries Act and in § 253.20 of this title, the terms used in this subpart have the following meanings:

Catastrophic regional fishery disaster means a natural disaster, including a hurricane or tsunami, or a regulatory closure (including regulatory closures resulting from judicial action) to protect human health or the marine environment (but not including regulations and closures to address overfishing), that:

(1) Results in economic losses to coastal or fishing communities;

(2) Affects more than one state or a major fishery managed by a Council or interstate fishery commission; and

(3) Is determined by the Secretary to be a commercial fishery failure under section 312(a) of the Magnuson-Stevens Act or a fishery resource disaster under section 308(d) of the Interjurisdictional Fisheries Act.

Coastal community means a group of people living in a particular area located on the coast of any of the several states of the United States.

Commercial fishery means the same as ''commercial fishing'' in the Magnuson-Stevens Act, which is ''fishing in which the fish harvested, either in whole or in part, are intended to enter commerce or enter commerce through sale, barter, or trade.''

Commercial fishery failure means either one of the following:

(1) The 12-month revenues from commerce in the fishery (which is dependent on the fishery resource subject to a fishery resource disaster) have decreased by 80 percent or more compared to the average for the immediately preceding 5-year period; or

(2) The 12-month revenues from commerce in the fishery (which is dependent on the fishery resource subject to a fishery resource disaster) have decreased by at least 35 percent compared to the average for the immediately preceding 5-year period, and severe economic impacts have occurred due to such decreased annual revenues and the decline in revenues is beyond the normal range of fluctuation of average annual revenues of the fishery compared with the immediately preceding 5-year period. Decreased revenues not equal to at least a 35 percent decline of revenues over the immediately preceding 5-year period is by definition not a commercial fishery failure.

Conservation and management means all of the rules, regulations, conditions, methods, and other measures which are required to rebuild, restore, or maintain, and which are useful in rebuilding, restoring, or maintaining, any fishery resource and the marine environment.

Council means one of the eight Regional Fishery Management Councils established by Section 302 of the Magnuson-Stevens Act.

Economic losses means a revenue decline in a fishery to a degree consistent with a commercial fishery failure for the fishery.

Fishery means one or more stocks of fish which can be treated as a unit for purposes of conservation and management and which are identified on the basis of geographic, scientific, technical, recreational, and economic characteristics; and any fishing for such stocks.

Fishery resource means any fishery, any stock of fish, any species of fish, and any habitat of fish when used in connection with requests for disaster assistance under the Magnuson-Stevens Act; and means finfish, mollusks, crustaceans, and any other form of marine animal or plant life, other than marine mammals and birds when used in connection with requests for disaster assistance under the Interjurisdictional Fisheries Act. A fishery resource is not a part of the marine environment.

Fishery resource disaster means a sudden, unexpected, large decrease in fish stock biomass or other change that results in loss of essentially all access to the fishery resource, such as loss of fishing vessels and gear, for a substantial period of time. Under the Magnuson-Stevens Act, executive or judicial actions implemented to protect human health or the marine environment may cause a fishery resource disaster if the result is loss of essentially all access to the fishery resource for a substantial period of time or for the foreseeable future.

Fishing community means a coastal community which is substantially dependent on or substantially engaged in the harvest or processing of fishery resources to meet social and economic needs.

Harm means uninsured physical damage or economic loss to fishing vessels, fishing gear, processing facilities, habitat, marketability or infrastructure (*i.e.*, port facilities for landing or unloading catch) suffered as a direct result of a fishery resource disaster arising from a hurricane or other natural disaster and measured in economic terms, consistent with the requirements to determine a commercial fishery failure.

Major fishery managed by a Council means any fishery for which a Regional Fishery Management Council has prepared and the Secretary has approved and implemented a Federal fishery management plan under section 304 of the Magnuson-Stevens Act.

Man-made causes means causes due to some human event or activity that could not have been prevented or addressed by fishery management measures and that are otherwise beyond the control of fishery managers to mitigate through conservation and management measures, including regulatory restrictions (including those imposed as a result of judicial action) imposed to protect human health or the marine environment.

Marine environment consists of:

(1) Ocean or coastal waters (note: Coastal waters may include intertidal areas, bays, or estuaries);

(2) An area of lands under ocean or coastal waters; or

(3) A combination of the above.

Natural causes means a weather-, climate-, or biology-related event (e.g., hurricane, flood, drought, El Niño effects on water temperature, disease), but does not include normal or cyclical variations in species distribution or stock abundance, etc.

Secretary means the Secretary of Commerce, or his/her designee.

Serious disruption affecting future production means an unexpected sudden and precipitous decrease in the harvestable biomass or spawning stock size of a fish stock that causes a limitation to access to the fishery for a substantial period of time in a specific area. The anticipated economic impact on production is consistent with a commercial fishery failure.

Undetermined causes means causes in which the current state of knowledge does not allow the identification of the exact cause or causes; however, fishing restrictions to end overfishing, overfishing, or inadequate harvest controls cannot be the basis for making a fishery disaster determination.

(b) If any of the terms in paragraph (a) of this section are defined differently in § 253.20 of this title, for purposes of this subpart the definitions in this section apply.

§ 600.1503 Determining a commercial fishery failure or determining a serious disruption affecting future production of a fishery or determining harm due to a fishery resource disaster.

(a) *Three-pronged test.* Every request for fisheries disaster assistance under section 312(a) of the Magnuson-Stevens Act or under sections 308(b) or 308(d) of the Interjurisdictional Fisheries Act must meet the appropriate three-pronged test:

(1) There must have been a fishery resource disaster within the meaning of the Magnuson-Stevens Act or the Interjurisdictional Fisheries Act and these regulations;

(2) The cause for the fishery resource disaster must be one of the causes defined in paragraph (c) of this section; and

(3)(i) Under the Magnuson-Stevens Act section 312(a) and Interjurisdictional Fisheries Act section 308(b) and these regulations, there must be economic impact stemming from the fishery resource disaster which supports a determination of a commercial fishery failure;

(ii) Under Interjurisdictional Fisheries Act section 308(b), in lieu of a commercial fishery failure there must be a determination of a serious disruption affecting future production of a fishery; or

(iii) Under Interjurisdictional Fisheries Act section 308(d), there must be a determination of harm to persons engaged in commercial fisheries incurred as a direct result of a fishery resource disaster arising from a hurricane or other natural disaster.

(b) *Establishing the existence of a fishery resource disaster.* (1) Where there is convincing evidence that there has been a sudden, unexpected large decrease in fish stock biomass or other event that results in the loss of essentially all access to the fishery resource, for a substantial period of time in a specific area, the Secretary will conclude that there has been a fishery resource disaster.

(2) Analysis by the Secretary may include, among other things, information provided by fishery stock assessments, landings data, storm damage assessments to habitat, and documents evidencing lost vessels and gear. The Secretary may require the applicant to submit whatever additional information it believes is necessary to reach a conclusion on whether a fishery resource disaster has occurred.

(c) *Causes—natural, man-made, or undetermined.* (1) Under Magnuson-Stevens Act section 312(a) and these regulations, the Secretary shall determine whether there has been a commercial fishery failure due to a fishery resource disaster as a result of:

(i) Natural causes;

(ii) Undetermined causes; or

(iii) Man-made causes beyond the control of fishery managers to mitigate through conservation and management measures, including regulatory restrictions (including those imposed as a result of judicial action) imposed to protect human health or the marine environment.

(iv) Executive or judicial actions that provide for fishery resource conservation do not constitute ''man-made'' causes and are not a basis for commercial fishery failure determination, unless they are imposed to protect human health or the marine environment. A regulatory closure of a fishery to protect public health or the marine environment could cause a fishery resource disaster resulting in a commercial fishery failure. However, fishery regulations (including fishery rebuilding regulations, closure of a fishery or other direct or indirect effort controls) for conservation and management of a fishery resource, including measures to address overfishing, cannot constitute the basis for a determination that a commercial fishery failure due to a fishery resource disaster exists under section 312(a) of the Magnuson-Stevens Act.

(2) Under Interjurisdictional Fisheries Act section 308(b) and these regulations, the Secretary shall determine whether there has been a commercial fishery failure or a serious disruption affecting future production due to a fishery resource disaster as a result of:

(i) Natural causes; or

(ii) Undetermined causes.

(3) Under Interjurisdictional Fisheries Act section 308(d) and these regulations, the Secretary shall determine whether harm has been incurred as a result of natural causes.

(d) *Determination of a commercial fishery failure or a serious disruption affecting future production of a fishery.*

(1) *Elements considered in making the determination.* In making a determination of a commercial fishery failure, the Secretary shall consider the stock or stocks of fish that constitute the fishery in which a commercial fishery failure determination is sought, whether the request includes non-Federal as well as Federal fisheries, and the geographical boundaries of the fishery. The analysis by the Secretary may include information on revenues, landings data, prices, actual losses, and market conditions. The magnitude of the fishery is important as are other opportunities for the affected fishermen. The Secretary will consider the immediately preceding 5-year average revenue information. Exogenous market factors (e.g., reduced demand for product, increased fuel and other energy costs) cannot be the basis for a positive determination of a commercial fishery failure. The Secretary, in his/her sole discretion, may request non-government review of the economic data. The Secretary may require the applicant to submit whatever additional information he/she believes is necessary to determine whether the economic impacts are severe enough to constitute a commercial fishery failure.

(i) In making a determination of a serious disruption affecting future production of a fishery, the Secretary shall consider the estimated decrease in harvestable biomass or spawning stock size of the fishery affected by the disaster arising from natural or undetermined causes.

(ii) [Reserved]

(2) *Fast Track Determination.* Pursuant to Magnuson-Stevens Act section 312(a) and Interjurisdictional Fisheries Act section 308(b), if the Secretary finds that the 12-month revenues from commerce in the fishery (which is dependent on the fishery resource subject to a fishery resource disaster) have decreased by 80 percent

or more compared to the average for the immediately preceding 5-year period, then the Secretary shall determine there has been a commercial fishery failure. In addition, in the case of Interjurisdictional Fisheries Act section 308(b), the Secretary shall issue a determination of a serious disruption affecting future production if he/she finds that the harvestable biomass or spawning stock size of the fish targeted by the fishery (which is dependent on the fishery resource subject to a fishery disaster) has decreased by 80 percent or more compared to the immediately preceding 5-year period. In both of these instances, the Secretary will send the applicant a letter of positive determination no later than 30 days after receiving evidence substantiating a decrease in revenues of 80 percent or more and that the elements of the three prong test relating to causation and fishery resource disaster are met.

(3) *Standard Track Determination*. Pursuant to Magnuson-Stevens Act section 312(a) and Interjurisdictional Fisheries Act section 308(b), if the Secretary finds that the 12-month revenues from commerce in the fishery (which is dependent on the fishery resource subject to a fishery resource disaster) have decreased by less than 80 percent but at least 35 percent compared to the average annual revenues during the immediately preceding 5-year period, then the Secretary may issue a determination of a commercial fishery failure. The Secretary shall make his/her decision based on the severity of the economic impacts with consideration of mitigating circumstances. In determining the severity of the economic impacts, the Secretary shall consider, among other things, the degree of economic hardship suffered by those engaged in the fishery. Because the impact of revenue decline will vary among fisheries, a commercial fishery failure determination in a fishery where 12-month revenues have declined less than 80 percent but at least 35 percent compared to the average annual revenues during the immediately preceding 5-year period, must be made on a case-by-case basis. For a positive determination, the Secretary would need to conclude that severe economic impacts due to significantly decreased revenues from commerce in the fishery (which is dependent on the fishery resource subject to a fishery resource disaster) of between 30 and 80 percent over 12 months are beyond the normal range of revenue fluctuations during the immediately preceding 5-year period. The Secretary shall consider the degree to which those impacts are offset by mitigating circumstances, including other commercial fishing opportunities for the affected fishermen.

(4) In the case of Interjurisdictional Fisheries Act section 308(b), the Secretary may issue a determination of a serious disruption affecting future production if he/she finds that the harvestable biomass or spawning stock size of the fish targeted by the fishery (which is dependent on the fishery resource subject to a fishery disaster) has decreased by less than 80 percent but at least 35 percent compared to the average for the immediately preceding 5-year period. The Secretary shall make his/her decision based on the severity of the disruption affecting future production of the fishery. In reaching a determination, the Secretary shall consider, among other things, most recent trawl surveys and other fishery resource surveys conducted by NMFS and/or state officials, as well as most recent stock assessments and other indicators of future production from the fishery.

(5) A decrease in 12-month revenues of less than 35 percent compared to the average of the immediately preceding 5-year period will not support a positive determination under Magnuson-Stevens Act 312(a). A decrease in harvestable biomass or spawning stock size of less than 35 percent compared to the average for the immediately preceding 5-year period will not support a positive determination under the Interjurisdictional Fisheries Act 308(b).

(e) *Repetitive requests not allowed: One positive commercial fishery failure or serious disruption determination per fishery resource disaster*. Once the Secretary has made a positive commercial fishery failure determination, or under Interjurisdictional Fisheries Act section 308(b) found a serious disruption affecting future production of a fishery due to a fishery resource disaster, he/she may not make a commercial fishery failure or serious disruption determination in any subsequent year based on the same fishery resource disaster. In order for the Secretary to make a new commercial fishery failure or serious disruption determination in a fishery for which an earlier positive determination was made, or in substantially the same fishery, there must be a new triggering event based on new data that evidences an appreciable change in the fishery resource and the economic conditions of the commercial fishery failure.

(f) *Determination of harm incurred under Interjurisdictional Fisheries Act section 308(d)*. The Secretary may provide assistance directly to persons engaged in commercial fishing or indirectly to those persons through states and local government agencies and nonprofit organizations, for projects or other measures to alleviate harm determined by the Secretary to have been incurred as a direct result of a fishery resource disaster arising from a hurricane or other natural disaster. In making a determination as to whether harm to persons engaged in commercial fisheries incurred as a direct result of a fishery resource disaster arising from a hurricane or other natural disaster, the Secretary must determine that:

(1) There was a fishery resource disaster within the meaning of section 308(d) of the Interjurisdictional Fisheries Act and these regulations;

(2) The cause for the disaster must have been a hurricane or other natural disaster; and

(3) The harm incurred was a direct result of a fishery resource disaster arising from a hurricane or other natural disaster.

(g) *One harm incurred determination per fishery resource disaster*. Once the Secretary has made a positive determination of harm incurred under § 600.1503(f), he/she may not make a harm incurred determination in any subsequent year based on the same fishery resource disaster. In order for the Secretary to make a new determination of harm incurred in a fishery for which an earlier positive determination was made, there must be a new triggering event based on a fishery resource disaster arising from new data that evidences an appreciable change in the fishery resource. Additionally, there must be a showing of new harm incurred based on the average revenues during the immediately preceding 5-year period.

(h) *Regional catastrophic fishery failure*. Under section 315 of the Magnuson-Stevens Act, a catastrophic regional fishery disaster affects more than one state or a major fishery managed by a Regional Fishery Management Council or interstate fishery commission.

(1) A major fishery is defined as a fishery in Federal waters affecting fishermen in more than 1 state or territory. Requests for a determination of a Regional Catastrophic Fishery Failure must be submitted in writing by two or more Governors in a joint letter to the Secretary.

(2) A determination of a regional catastrophic fishery failure under section 315 of the Magnuson-Stevens Act must meet all of the requirements for a determination under section 312(a) of the Magnuson-Stevens Act or section 308(d) of the Interjurisdictional

Fisheries Act and comply with all requirements of § 600.1504.

(3) In determining whether there has been a catastrophic regional fishery disaster, the Secretary must conclude that the severity of the economic impacts on the coastal or fishing communities are beyond the normal range of revenue fluctuations during the 5-year period immediately preceding the claimed disaster.

§ 600.1504 Initiating an evaluation request.

(a) The Secretary may accept requests for fisheries disaster assistance under section 312(a) or section 315 of the Magnuson-Stevens Act from the Governor of an affected state, or two or more Governors if under section 315, or an elected or politically appointed representative of the affected fishing community (i.e., mayor, city manager, or county executive). The Secretary may accept requests for fisheries disaster assistance under section 308(b) or section 308(d) of the Interjurisdictional Fisheries Act from an elected or politically appointed representative of the affected fishing community (i.e., mayor, city manager, or county executive). All such requests should be submitted to the Secretary by letter and must include:

(1) A clear definition of the fishery, including identification of all fish stocks and whether it includes non-Federal fisheries as well as Federal fisheries, and the geographical boundaries of the fishery for which the request is being made;

(2) The rationale and supporting documentation as required by this subpart, including:

(i) Characteristics of the fishery which is the subject of the request and other related fisheries that participants also fish in (size and value; number of participants; seasonal and other environmental limitations; socio-economic data; landings data; and market conditions);

(ii) Decline in landings, economic impact, revenues, or net revenues by vessel category, port, etc. (this should represent the proportion of the affected fishery resource compared to the commercial fishery as a whole, not just for the affected fishery resource);

(iii) Number of participants involved by vessel category, port, etc.;

(iv) Length of time the resource (or access to it) has been or will be restricted;

(v) Documented decline in the stock(s);

(vi) In the case of a fishery disaster request for a fishery that has been subject to overfishing during the 5-year period immediately preceding the claimed disaster, the Secretary will presume that overfishing or inadequate harvest controls was the cause of the claimed disaster unless the requester provides:

(A) Information that demonstrates that overfishing did not cause the disaster if the stock(s) was subject to overfishing during the 5-year period immediately preceding the claimed disaster; and

(B) Information that demonstrates that adequate harvest controls were in place during the 5-year period immediately preceding the claimed disaster if the disaster was claimed to be caused by undetermined causes.

(vii) Documented spending plan which describes the activities that could be used to mitigate adverse impacts if a commercial fishery failure due to a fishery resource disaster were determined; and

(viii) A comprehensive economic and socio-economic evaluation of the affected region's fisheries, including economic losses to coastal and fishing communities, if the request is for a catastrophic regional fishery disaster.

(3) The amount of financial assistance needed to alleviate the claimed commercial fishery failure (under Magnuson-Stevens Act section 312(a) or 315 and under the Interjurisdictional Fisheries Act section 308(b)), the serious disruption affecting future production (under Interjurisdictional Fisheries Act section 308(b)), or harm incurred (under Interjurisdictional Fisheries Act section 308(d)), including which groups of fishery participants would be eligible to receive assistance.

(b) The Secretary will presume that overfishing or inadequate harvest controls was the cause of the claimed disaster unless the requester demonstrates otherwise.

(c) The requester may submit any additional information he or she believes relevant to an evaluation of the request. The requester is encouraged to contact the appropriate NMFS regional office informally for assistance in identifying materials that would assist in the evaluation before submitting the initiation letter.

(d) After receiving the initial request, the Secretary may request any additional information that it deems necessary to complete his/her evaluation and reach a decision.

(e) Requests without a rationale and supporting documentation for determining a commercial fishery failure will be denied. If the request fails to meet any one of the appropriate three prongs required to make a determination, the Secretary shall send the applicant a letter explaining his/her reasons for disapproving the request.

(f) Any new request from the applicant for disaster assistance in the same fishery for which a positive determination has previously been made must include an explanation of a new triggering event based on new data that evidences an appreciable change in the fishery resource, and the economic conditions of the commercial fishery showing new harm.

(g) Any vessel-specific fishery information submitted to the Secretary with a request for a Magnuson-Stevens section 312(a) or 315 determination would be subject to the confidentiality provisions and limitations of section 402(b) of the Magnuson-Stevens Act and regulations in 50 CFR 600 subpart E. Information submitted with a request for an Interjurisdictional Fisheries Act section 308(b) or 308(d) determination will be protected to the extent permitted by statute.

(h) The Secretary may also initiate his/her own evaluation and make a determination for fisheries disaster assistance based on relevant facts or data.

§ 600.1505 Evaluation process.

The Secretary shall initiate an evaluation of the letter requesting a determination as soon as practicable after receiving it. The Secretary shall conduct his/her evaluation in accordance with § 600.1503. The Secretary shall inform the requester of the outcome of the evaluation, including reasons for the decision.

§ 600.1506 [Reserved]

§ 600.1507 [Reserved]

§ 600.1508 [Reserved]

§ 600.1509 [Reserved]

§ 600.1510 [Reserved]

[FR Doc. E9–810 Filed 1–14–09; 8:45 am]

BILLING CODE 3510–22–P

DEPARTMENT OF COMMERCE

National Oceanic and Atmospheric Administration

50 CFR Part 648

[Docket No. 080410547–81602–01]

RIN 0648–AW70

Magnuson–Stevens Fishery Conservation and Management Act Provisions; Fisheries of the Northeastern United States

AGENCY: National Marine Fisheries Service (NMFS), National Oceanic and

Atmospheric Administration (NOAA), Commerce.

ACTION: Proposed rule; request for comments.

SUMMARY: Several sections of the regulations governing the Fisheries of the Northeastern United States contain minor inadvertent errors, omissions, and ambiguities. This proposed rule would revise the portions of the Northeast (NE) fishery regulations that relate to the Vessel Monitoring System (VMS) and prohibitions, standardize the VMS vendor requirements, and add prohibitions and other regulations to clarify existing policies and requirements.

DATES: Written comments must be received on or before February 17, 2009.

ADDRESSES: You may submit comments, identified by 0648–AW70, by any one of the following methods:

• Electronic Submissions: Submit all electronic public comments via the Federal e–Rulemaking Portal: *http://www.regulations.gov*.

• Mail: Paper, disk, or CD–ROM comments should be sent to Regional Administrator, National Marine Fisheries Service, 55 Great Republic Drive, Gloucester, MA 01930. Mark the outside of the envelope, ''Comments on the Proposed Rule to Modify VMS and Prohibitions Regulations.''

• Fax: (978) 281–9135; attention Moira Kelly.

Instructions: All comments received are a part of the public record and will generally be posted to *http://www.regulations.gov* without change. All personal identifying information (for example, name, address, etc.) voluntarily submitted by the commenter may be publicly accessible. Do not submit confidential business information or otherwise sensitive or protected information.

NMFS will accept anonymous comments (enter N/A in the required fields, if you wish to remain anonymous). You may submit attachments to electronic comments in Microsoft Word, Excel, WordPerfect, or Adobe PDF file formats only.

Written comments regarding the burden-hour estimates or other aspects of the collection–of–information requirements contained in this proposed rule may be submitted to the Regional Administrator, Northeast Region, National Marine Fisheries Service, and by e–mail to *David_Rostker@omb.eop.gov* or fax to (202) 395–7285.

FOR FURTHER INFORMATION CONTACT: Moira C. Kelly, Fishery Policy Analyst, phone (978) 281–9218, fax (978) 281–9135.

SUPPLEMENTARY INFORMATION:

Background

This proposed rule would revise portions of the NE fishery regulations by reorganizing the VMS and prohibitions sections, standardizing the VMS vendor requirements, and adding prohibitions and other regulations that would correct or clarify existing policies and requirements. The proposed changes would be enacted under the authority given to the Secretary of Commerce to promulgate regulations to fully carry out the requirements of the Magnuson–Stevens Fishery Conservation and Management Act (Magnuson–Stevens Act). The proposed changes are summarized below.

VMS–Related Modifications

This action would standardize the qualification requirements of VMS vendors and VMS units between the NE Region and the National VMS program. The Regional Administrator, NE Region, NMFS (RA), would retain the authority to approve or disapprove a vendor or unit for use in the NE Region; however, the standards against which the vendors are judged would be the same as used by the National VMS program. This action would ensure that the VMS vendors meet industry–accepted criteria while the NE Region's specific VMS needs are achieved.

For consistency across fishery management plans (FMPs), a measure implemented under the Surfclam and Ocean Quahog FMP requiring vessel owners to call the Office of Law Enforcement (OLE) to verify connectivity between a new or replacement VMS unit and OLE prior to the vessel sailing on its first trip using VMS would be expanded to all vessel owners. This expansion would allow OLE to ensure that the units are installed and registered correctly in all of the necessary systems. In addition, this action would reorganize the VMS regulations so that the requirements that apply to vessel owners/operators are separate and distinguishable from the requirements that apply to VMS vendors. Further, the VMS Demarcation Line would be modified through the addition of a new coordinate intended to allow vessels from Monhegan Island, Isle au Haut, and Matinicus Isle, Maine, to more easily comply with the VMS requirements of the NE Multispecies FMP.

Prohibitions–Related Modifications

The prohibitions section (§ 648.14) is currently difficult to navigate because it is generally not well organized. The reorganization of the prohibitions section would assist industry in more easily understanding the rules and regulations and serve to improve compliance with those requirements. This proposed rule would group together the prohibitions relating to a specific FMP, title the sections and subsections, and provide more guidance on where to find a specific prohibition. This action also would add prohibitions to clarify or correct existing requirements. The additional prohibitions, which relate to regulations that have already been reviewed and approved through appropriate rulemaking procedures, clarify that aiding and abetting actions prohibited by the Magnuson–Stevens Act, or any other statute administered by NOAA, is prohibited; that observers are prohibited from providing false information; that miscoding of trips through the VMS by vessel owners/operators is not permissible; that transferring regulated species at sea, without authorization from the RA, or as otherwise permitted, is prohibited; and, that any vessel possessing or retaining any species regulated by the NE Region must be under its own power.

Other Modifications

Several regulations pertaining to VMS were recently inadvertently deleted when two final rules affecting the same sections of the regulations were published at about the same time. The final rule implementing Surfclam/Ocean Quahog Framework Adjustment (FW) 1 inadvertently deleted sections of the VMS regulations that were modified or added under the NE Multispecies FW 42 correction rule. This rule would reinstate those regulations. Other sections that would be clarified relate to recordkeeping requirements and twine–top measurements of scallop dredges. Under this proposed rule, the recordkeeping regulations would be modified to specify some of the types of records vessel owners and dealers are required to retain, and to clarify that any person acting in the capacity of a federally permitted dealer is subject to the same requirements as a federally permitted dealer. Further, this rule would clarify how to measure twine–top in scallop dredges and assist industry members with complying with the minimum mesh size requirements of the Atlantic Sea Scallop FMP. Other minor adjustments to the regulations would correct the references of the Regular B Days–At–Sea (DAS) Program by removing the word ''pilot,'' and make other corrections to cross–references.

A detailed description of the proposed regulatory changes, including their justification, is provided in the following paragraphs.

Proposed Measures

1. VMS Type Approval Regulations

Currently, the NE Region is the only NMFS region that has a different set of qualifications than the National VMS Program that VMS vendors and units must meet in order to sell approved VMS units to Federal permit holders. This action is intended to standardize the NE Region's qualifications with those of the National VMS Program, while retaining the RA's ability to approve or disapprove VMS vendors or units for use in the NE Region independently from the National VMS Program. Standardizing the VMS vendor and unit requirements would add the definition of a ''mobile transmitting unit'' as the formal definition of a VMS unit, and the definition of a ''mobile communications service provider'' as the formal definition of a VMS vendor.

2. Revisions to VMS Demarcation Line and Other VMS Requirements

The final rule implementing measures approved under FW 42 to the NE Multispecies FMP (71 FR 62156; November 22, 2006) required all vessels fishing for groundfish under a NE multispecies DAS to use VMS. Counting of a vessel's DAS begins once the vessel crosses the VMS Demarcation Line, a line running roughly parallel to the coast, as specified at § 648.10(a). Prior to the implementation of the FW 42 VMS requirement, several NE multispecies vessels were observed to be operating out of several small islands off the coast of Maine; namely, Monhegan Island, Isle au Haut, and Matinicus Isle. These vessels could not be charged any NE multispecies DAS while using the VMS, because the islands are seaward of the VMS Demarcation Line by several miles. In order to begin a DAS trip while using the VMS, a vessel must make a declaration in port, and cross the Demarcation Line on its way out to sea. The first VMS position detected seaward of the Demarcation Line is the beginning time for charging DAS. However, vessels fishing from these islands cannot trigger the DAS clock because they begin their trips seaward of the VMS Demarcation Line and, as a result, the VMS does not detect that a vessel operating out of these islands has begun (or ended) a trip under a DAS. This action would modify the existing VMS Demarcation Line to include Monhegan Island, ME, so that those vessels are accurately charged DAS, as appropriate. The revised Demarcation Line also allows vessels from the other Maine islands to steam inside the Demarcation Line easily, as it is much closer, and begin their trip.

The final rule implementing measures for FW 1 to the Surfclam and Ocean Quahog FMP inadvertently removed previously approved sections of the VMS regulations. This proposed rule would reinstate those regulations that had previously been found at § 648.10(b)(2)(i) through (iv). A correcting amendment that became effective December 27, 2007 (72 FR 73274) amended § 648.10(b)(2)(iii); however, because that section had been removed prior to publication of the correcting amendment, the modification was not enacted. This amendment would implement that modification with the reinstatement of that regulation pertaining to how DAS are calculated as a vessel crosses the Demarcation Line or enters the Eastern U.S./Canada Area.

FW 1 also implemented a requirement that surfclam and ocean quahog vessel owners call OLE when installing or replacing a VMS unit to ensure connectivity between the vessel's unit and the OLE database. Previously, vessel owners who installed or replaced a unit would attempt to declare a trip and/or sail before the unit was registered by the National VMS Program or assigned to the NE Region. This would result in vessel owners appearing to sail with no code, or a trip not being recorded correctly, causing problems for both the vessel owner and OLE. This action would expand the surfclam and ocean quahog verification requirement to all vessel owners to confirm that their unit is in compliance with all the registration requirements of the various systems employed by the VMS program.

3. Reorganization of VMS and Prohibitions Sections

In addition to the changes and additions described above, the VMS and prohibitions sections would be reorganized by this proposed rule. The VMS sections (§§ 648.9 and 648.10) would be reorganized by relevance to a VMS vendor or unit requirement, or a vessel owner/operator requirement. The prohibitions section (§ 648.14) would be organized by FMP and, within each fishery specific sub-section, by relevance to regulatory requirements (e.g., permit requirements, possession and landing restrictions, gear requirements, etc.).

4. Additional Prohibitions

The following prohibitions would be added by this proposed rule and are intended to clarify existing policies or regulations in order to increase understanding among affected parties and improve enforcement:

(1) A prohibition on the aiding and abetting of actions prohibited by the Magnuson–Stevens Act, or any regulation, notice, or permit issued in accordance with the Magnuson–Stevens Act, or any other statute administered by NOAA. This prohibition would clarify existing policy that the act of assisting in a violation of Federal fisheries regulations is itself a violation.

(2) A prohibition specifying that it is a violation for an observer to provide false or inaccurate data or other information to NMFS. This prohibition would clarify existing requirements for observers under their contracts.

(3) A prohibition clarifying that it is a violation to provide a VMS activity code that does not reflect the intended fishing activity.

(4) A prohibition clarifying that it is a violation to transfer at sea species regulated in the NE Region, without a Letter of Authorization or otherwise allowed, by vessels issued a valid Federal permit.

(5) A prohibition clarifying that any vessel fishing for, possessing, or retaining species regulated in the NE Region must be under its own power, unless it is an emergency.

5. Revisions to Recordkeeping Requirements

This proposed rule would revise the current recordkeeping requirements by identifying some of the types of records that are required to be kept regarding fish possessed by a vessel; or possessed, received, or purchased by a dealer that are required to be reported. This revision would clarify, for vessel owners and dealers, which records must be preserved and available for inspection by authorized officers, or other NMFS employees, as designated by the RA. To accomplish this, this rule would provide examples of the types of records that are required to be retained by dealers.

In addition, this rule would clarify that an individual acting in the capacity of a dealer, as defined by § 648.2, is required to submit a detailed report of all fish purchased or received for a commercial purpose, as federally permitted dealers are required to do.

6. Addition of Twine–top Measurement Regulation

This proposed rule would add a provision to clarify how twine–top should be measured to determine compliance with the scallop dredge gear requirements found at § 648.51(b).

7. Other Corrections

All references to the above sections would be modified to correctly cross–reference the intended citation. Minor corrections to the existing prohibitions would also be enacted to increase their readability or correct inadvertent errors. Also, the word ''pilot'' would be removed from all references to the Regular B DAS Program. As of November 22, 2006, the effective date of NE Multispecies FW 42, neither program is considered to be a pilot program. In addition, an existing prohibition that it is unlawful for a vessel to possess more than two claws and eight legs per red crab, unless the vessel has been issued a red crab limited access red crab permit and is fishing under a DAS would be clarified by adding the supporting regulation to the red crab possession and landing restrictions.

Classification

Pursuant to section 305(d) of the Magnuson–Stevens Act, the Assistant Administrator for Fisheries, NOAA, has determined that this proposed rule is consistent with the FMPs of the NE Region, other provisions of the Magnuson–Stevens Act, and other applicable law, subject to further consideration after public comment.

This proposed rule has been determined to be not significant for purposes of Executive Order 12866.

The Chief Counsel for Regulation of the Department of Commerce certified to the Chief Counsel for Advocacy of the Small Business Administration that this proposed rule, if adopted, would not have a significant economic impact on a substantial number of small entities. The factual basis for this determination is as follows:

The proposed action would affect a substantial number of small entities, as all vessels issued a Federal permit in the NE Region would be affected by this action. The proposed action would correct/clarify the existing regulations to ensure that the current regulations accurately reflect measures adopted by the New England and Mid–Atlantic Fishery Management Councils and approved by the Secretary of Commerce. This action would ensure that the economic impacts analyzed in previous actions would be realized, but would not impose any additional economic impacts on affected entities. The proposed action would not significantly reduce profit for affected vessels, as the proposed measures are either administrative in nature and would not affect vessel operations, or would have no economic impact beyond that previously analyzed. This action would simply clarify or reinstate such requirements, respectively, but would not increase costs associated with these measures.

As a result, an initial regulatory flexibility analysis is not required, and none has been prepared.

This proposed rule contains a non–substantive change to a previously approved collection–of–information requirement subject to review and approval by OMB under the Paperwork Reduction Act (PRA). This requirement will be submitted to OMB for approval prior to the final rule. Public reporting burden for requiring all VMS users to confirm connectivity with the Office of Law Enforcement is estimated to average less than 5 minutes per response, including the time for reviewing instructions, searching existing data sources, gathering and maintaining the data needed, and completing and reviewing the collection information.

Public comment is sought regarding: whether this proposed collection of information is necessary for the proper performance of the functions of the agency, including whether the information shall have practical utility; the accuracy of the burden estimate; ways to enhance the quality, utility, and clarity of the information to be collected; and ways to minimize the burden of the collection of information, including through the use of automated collection techniques or other forms of information technology. Send comments on these or any other aspects of the collection of information to the Northeast Regional Office at the **ADDRESSES** above, and by e–mail to *David_Rostker@omb.eop.gov* or fax to (202) 395–7285.

Notwithstanding any other provision of the law, no person is required to respond to, and no person shall be subject to penalty for failure to comply with, a collection of information subject to the requirements of the PRA, unless that collection of information displays a currently valid OMB control number.

List of Subjects in 50 CFR Part 648

Fisheries, Fishing, Reporting and recordkeeping requirements.

Dated: January 9, 2009.

Samuel D. Rauch III,

Deputy Assistant Administrator for Regulatory Programs, National Marine Fisheries Service.

For the reasons stated in the preamble, 50 CFR part 648 is proposed to be amended as follows:

PART 648—FISHERIES OF THE NORTHEASTERN UNITED STATES

1. The authority citation for part 648 continues to read as follows:

Authority: 16 U.S.C. 1801 *et seq.*

2. In § 648.2, definitions for ''MCSP'', ''MTU'', and ''Records'' are added in alphabetical order to read as follows:

§ 648.2 Definitions.

* * * * *

MCSP means a Mobile Communications Service Provider, which is an operator of a mobile communications service used to provide wireless connectivity between mobile platforms and fixed platforms, and enables location transmission and two–way message exchange between the vessel and NMFS, when using a compatible MTU.

* * * * *

MTU means a Mobile Transmitting Unit, which is a transceiver or communications device, including antennae, dedicated message terminal and display, and an input device such as a keyboard installed on a fishing vessel participating in the VMS program.

* * * * *

Records, with respect to records required to be kept by § 648.7, means those that include, but are not limited to, any written, recorded, graphic, electronic, or digital material; as well as other information stored in or accessible through a computer or other information retrieval system; worksheets; weighout slips; preliminary, interim, and final tally sheets; tags; notes; logbooks; statements; receipts; checks; ledgers; notebooks; diaries; spreadsheets; diagrams; graphs; charts; tapes; disks; or computer printouts.

* * * * *

3. In § 648.4, paragraphs (a)(8)(ii) and (a)(9)(i)(N)(*3*)(*i*) are revised to read as follows:

§ 648.4 Vessel permits.

(a) * * *

(8) * * *

(ii) *Party and charter vessels.* All party or charter boats must have been issued and carry on board a valid party or charter boat permit to fish for, possess, or land Atlantic bluefish in or from the EEZ if carrying passengers for hire. Persons on board such vessels must observe the possession limits established pursuant to § 648.164 and the prohibitions on sale specified in § 648.14(q).

* * * * *

(9) * * *

(i) * * *

(N) * * *

(*3*) * * *

(*i*) A vessel denied a limited access monkfish Category G or H permit may fish under the monkfish DAS program, provided that the denial has been

appealed, the appeal is pending, and the vessel has on board a letter from the Regional Administrator authorizing the vessel to fish under the monkfish DAS program. The letter of authorization must be carried on board the vessel. A vessel with such a letter of authorization shall not exceed the annual allocation of monkfish DAS as specified in § 648.92(b)(1) and must report the use of monkfish DAS according to the provisions of § 648.10. If the appeal is finally denied, the Regional Administrator shall send a notice of final denial to the vessel owner; the letter authorizing temporary participation in the monkfish fishery shall become invalid 5 days after receipt of the notice of denial, but no later than 10 days from the date of the denial letter. If the appeal is approved, any DAS used during pendency of the appeal shall be deducted from the vessel's annual allocation of monkfish DAS for that fishing year.

* * * * *

4. In § 648.7, paragraphs (a)(1) introductory text, (d), and (e) are revised to read as follows:

§ 648.7 Recordkeeping and reporting requirements.

* * * * *

(a) * * *

(1) *Detailed report.* Federally permitted dealers, and any individual acting in the capacity of a dealer, must submit to the Regional Administrator or to the official designee a detailed report of all fish purchased or received for a commercial purpose, other than solely for transport on land, within the time period specified in paragraph (f) of this section, by one of the available electronic reporting mechanisms approved by NMFS, unless otherwise directed by the Regional Administrator. The following information, and any other information required by the Regional Administrator, must be provided in each report:

* * * * *

(d) *Inspection.* Upon the request of an authorized officer or an employee of NMFS designated by the Regional Administrator to make such inspections, all persons required to submit reports under this part must make immediately available for inspection copies of reports, and all records upon which those reports are or will be based, that are required to be submitted or kept under this part.

(e) *Record retention.* Any record, as defined at § 648.2, related to fish possessed, received, or purchased by a dealer that is required to be reported, must be retained and be available for immediate review for a total of 3 years after the date the fish were first possessed, received, or purchased. Dealers must retain the required records and reports at their principal place of business. Copies of fishing log reports must be kept on board the vessel and available for review for at least 1 year, and must be retained for a total of 3 years after the date the fish were last possessed, landed, and sold.

* * * * *

5. Section 648.9 is revised to read as follows:

§ 648.9 VMS vendor and unit requirements.

(a) *Approval.* The type approval requirements for VMS MTUs and MCSPs for the Northeast Region are those as published by the NMFS Office of Law Enforcement in the **Federal Register**, and are available upon request. Both the minimum national standards and any established regional standards must be met in order to receive approval for use in the Northeast Region. The Regional Administrator shall approve all MTUs and MCSPs operating in the Northeast Region.

(b) *Maintenance.* Once approved, VMS units must maintain the minimum standards for which they were approved in the type approval requirements. Any changes made to the original submission for approval of an MTU or MCSP by NMFS must follow the procedures outlined in the type approval requirements.

(c) *Notification.* A list of approved VMS vendors will be published on the Northeast Regional Office web site and in each proposed and final rule for implementing or modifying VMS requirements for specific fisheries.

(d) *Revocations.* In the event that a VMS vendor is deleted from the list of approved vendors, vessel owners that purchased a VMS unit from that vendor to meet Northeast requirements will be considered authorized to use that unit for the remainder of the unit's service life.

6. Section 648.10 is revised to read as follows:

§ 648.10 VMS and DAS requirements for vessel owners/operators.

(a) *VMS Demarcation Line.* The VMS Demarcation Line is defined by straight lines connecting the following coordinates in the order stated (a copy of a map showing the line is available from the Regional Administrator upon request):

VMS DEMARCATION LINE

Description	N. Lat.	W. Long.
1. Northern terminus point (Canada landmass)	45°03′	66°47′
2. A point east of West Quoddy Head Light	44°48.9′	66°56.1′
3. A point east of Little River Light	44°39.0′	67°10.5′
4. Whistle Buoy "8BI" (SSE of Baker Island)	44°13.6′	68°10.8′
5. Isle au Haut Light	44°03.9′	68°39.1′
6. A point south of Monhegan Island	43°43.3′	69°18.6′
7. Pemaquid Point Light	43°50.2′	69°30.4′
8. A point west of Halfway Rock	43°38.0′	70°05.0′
9. A point east of Cape Neddick Light	43°09.9′	70°34.5′
10. Merrimack River Entrance "MR" Whistle Buoy	42°48.6′	70°47.1′
11. Halibut Point Gong Buoy "1AHP"	42°42.0′	70°37.5′

VMS DEMARCATION LINE—Continued

Description	N. Lat.	W. Long.
12. Connecting reference point	42°40′	70°30′
13. Whistle Buoy "2" off Eastern Point	42°34.3′	70°39.8′
14. The Graves Light (Boston)	42°21.9′	70°52.2′
15. Minots Ledge Light	42°16.2′	70°45.6′
16. Farnham Rock Lighted Bell Buoy	42°05.6′	70°36.5′
17. Cape Cod Canal Bell Buoy "CC"	41°48.9′	70°27.7′
18. A point inside Cape Cod Bay	41°48.9′	70°05′
19. Race Point Lighted Bell Buoy "RP"	42°04.9′	70°16.8′
20. Peaked Hill Bar Whistle Buoy "2PH"	42°07.0′	70°06.2′
21. Connecting point, off Nauset Light	41°50′	69°53′
22. A point south of Chatham "C" Whistle Buoy	41°38′	69°55.2′
23. A point in eastern Vineyard Sound	41°30′	70°33′
24. A point east of Martha's Vineyard	41°22.2′	70°24.6′
25. A point east of Great Pt. Light, Nantucket	41°23.4′	69°57′
26. A point SE of Sankaty Head, Nantucket	41°13′	69°57′
27. A point west of Nantucket	41°15.6′	70°25.2′
28. Squibnocket Lighted Bell Buoy "1"	41°15.7′	70°46.3′
29. Wilbur Point (on Sconticut Neck)	41°35.2′	70°51.2′
30. Mishaum Point (on Smith Neck)	41°31.0′	70°57.2′
31. Sakonnet Entrance Lighted Whistle Buoy "SR"	41°25.7′	71°13.4′
32. Point Judith Lighted Whistle Buoy "2"	41°19.3′	71°28.6′
33. A point off Block Island Southeast Light	41°08.2′	71°32.1′
34. Shinnecock Inlet Lighted Whistle Buoy "SH"	40°49.0′	72°28.6′
35. Scotland Horn Buoy "S", off Sandy Hook (NJ)	40°26.5′	73°55.0′
36. Barnegat Lighted Gong Buoy "2"	39°45.5′	73°59.5′
37. A point east of Atlantic City Light	39°21.9′	74°22.7′
38. A point east of Hereford Inlet Light	39°00.4′	74°46′
39. A point east of Cape Henlopen Light	38°47′	75°04′
40. A point east of Fenwick Island Light	38°27.1′	75°02′
41. A point NE of Assateague Island (VA)	38°00′	75°13′
42. Wachapreague Inlet Lighted Whistle Buoy "A"	37°35.0′	75°33.7′
43. A point NE of Cape Henry	36°55.6′	75°58.5′
44. A point east of Currituck Beach Light	36°22.6′	75°48′
45. Oregon Inlet (NC) Whistle Buoy	35°48.5′	75°30′
46. Wimble Shoals, east of Chicamacomico	35°36′	75°26′
47. A point SE of Cape Hatteras Light	35°12.5′	75°30′
48. Hatteras Inlet Entrance Buoy "HI"	35°10′	75°46′

VMS DEMARCATION LINE—Continued

Description	N. Lat.	W. Long.
49. Ocracoke Inlet Whistle Buoy "OC"	35°01.5′	76°00.5′
50. A point east of Cape Lookout Light	34°36.5′	76°30′
51. Southern terminus point	34°35′	76°41′

(b) *Vessels required to use VMS.* The following vessels must have installed on board an operational VMS unit that meets the minimum performance criteria specified in, or as modified pursuant to § 648.9(a):

(1) A scallop vessel issued a Full–time or Part–time limited access scallop permit, or an LAGC scallop permit;

(2) A scallop vessel issued an Occasional limited access permit when fishing under the Sea Scallop Area Access Program specified under § 648.60;

(3) A vessel issued a limited access monkfish, Occasional scallop, or Combination permit, whose owner elects to provide the notifications required by this paragraph (b), unless otherwise authorized or required by the Regional Administrator under paragraph (d) of this section;

(4) A vessel issued a limited access NE multispecies permit that fishes under a NE multispecies Category A or B DAS;

(5) A vessel issued a surfclam (SF 1) or an ocean quahog (OQ 6) open access permit;

(6) Effective January 1, 2009, a vessel issued a Maine mahogany quahog (OQ 7) limited access permit, unless otherwise exempted under paragraph § 648.4(a)(4)(ii)(B)(*1*);

(7) A limited access monkfish vessel electing to fish in the Offshore Fishery Program in the SFMA, as provided in § 648.95; and

(8) A vessel issued a limited access herring permit (i.e., All Areas Limited Access Permit, Areas 2 and 3 Limited Access Permit, Incidental Catch Limited Access Permit).

(c) *Operating requirements for all vessels.* (1) Except as provided in paragraph (c)(2) of this section, or unless otherwise required by paragraph (c)(1)(ii) of this section, all required VMS units must transmit a signal indicating the vessel's accurate position, as specified under paragraph (c)(1)(i) of this section:

(i) At least every hour, 24 hr a day, throughout the year; or

(ii) At least twice per hour, 24 hr a day, throughout the year, for vessels issued a scallop permit and subject to the requirements of § 648.4(a)(2)(ii)(B).

(2) *Power–down exemption.* (i) Any vessel required to transmit the vessel's location at all times, as required in paragraph (c)(1) of this section, is exempt from this requirement if it meets one or more of the following conditions and requirements:

(A) The vessel will be continuously out of the water for more than 72 consecutive hours, the vessel signs out of the VMS program by obtaining a valid letter of exemption pursuant to paragraph (c)(2)(ii) of this section, and the vessel complies with all conditions and requirements of said letter;

(B) For vessels fishing with a valid NE multispecies limited access permit, a valid surfclam and ocean quahog permit specified at § 648.4(a)(4), or an Atlantic sea scallop limited access permit, the vessel owner signs out of the VMS program for a minimum period of 30 consecutive days by obtaining a valid letter of exemption pursuant to paragraph (c)(2)(ii) of this section, the vessel does not engage in any fisheries until the VMS unit is turned back on, and the vessel complies with all conditions and requirements of said letter;

(C) The vessel has been issued a limited access herring permit, and is in port, unless required by other permit requirements for other fisheries to transmit the vessel's location at all times. Such a vessel must re–power the VMS and submit a valid VMS activity declaration prior to leaving port; or

(D) The vessel has been issued an LAGC permit, is not in possession of any scallops onboard the vessel, is tied to a permanent dock or mooring, the vessel operator has notified NMFS through VMS by transmitting the appropriate VMS power–down code that the VMS will be powered down, and the vessel is not required by other permit requirements for other fisheries to transmit the vessel's location at all times. Such a vessel must re–power the VMS and submit a valid VMS activity declaration prior to moving from the fixed dock or mooring. VMS codes and instructions are available from the Regional Administrator.

(ii) *Letter of exemption*—(A) *Application.* A vessel owner may apply for a letter of exemption from the VMS transmitting requirements specified in paragraph (c)(1) of this section for his/her vessel by sending a written request to the Regional Administrator and providing the following: The location of the vessel during the time an exemption is sought; the exact time period for which an exemption is needed (i.e., the time the VMS signal will be turned off and turned on again); and, in the case of a vessel meeting the conditions of paragraph (c)(2)(i)(A) of this section, sufficient information to determine that the vessel will be out of the water for more than 72 consecutive hours. The letter of exemption must be on board the vessel at all times, and the vessel may not turn off the VMS signal until the letter of exemption has been received.

(B) *Issuance.* Upon receipt of an application, the Regional Administrator may issue a letter of exemption to the vessel if it is determined that the vessel owner provided sufficient information as required under this paragraph (c)(2), and that the issuance of the letter of exemption will not jeopardize accurate monitoring of the vessel's DAS. Upon written request, the Regional Administrator may change the time period for which the exemption is granted.

(d) *Presumption.* If a VMS unit fails to transmit an hourly signal of a vessel's position, the vessel shall be deemed to have incurred a DAS, or fraction thereof, for as long as the unit fails to transmit a signal, unless a preponderance of evidence shows that the failure to transmit was due to an unavoidable malfunction or disruption of the transmission that occurred while the vessel was properly declared out of the scallop fishery, NE multispecies fishery, or monkfish fishery, as applicable, or while the vessel was not at sea.

(e) *VMS notifications*—(1) *VMS installation notification.* (i) The owner of such a vessel specified in paragraph (b) of this section, with the exception of a vessel issued a limited access NE multispecies permit as specified in paragraph (b)(4) of this section, must provide documentation to the Regional Administrator at the time of application for a limited access permit that the vessel has an operational VMS unit installed on board that meets the

minimum performance criteria, unless otherwise allowed under paragraph (b) of this section.

(ii) Vessel owners must confirm the VMS unit's operation and communications service to NMFS by calling the Office of Law Enforcement (OLE) to ensure that position reports are automatically sent to and received by NMFS OLE.

(iii) NMFS does not regard the fishing vessel as meeting the VMS requirements until automatic position reports and a manual declaration are received.

(iv) If a vessel has already been issued a limited access permit without the owner providing such documentation, the Regional Administrator shall allow at least 30 days for the vessel to install an operational VMS unit that meets the minimum performance criteria, and for the owner to provide documentation of such installation to the Regional Administrator.

(v) The owner of a vessel issued a limited access NE multispecies permit that fishes or intends to fish under a Category A or B DAS as specified in paragraph (b)(1)(vi) of this section must provide documentation to the Regional Administrator that the vessel has an operational VMS unit installed on board, meeting all requirements of this part, prior to fishing under a groundfish DAS.

(vi) NMFS shall provide notification to all affected permit holders providing detailed information on procedures pertaining to VMS purchase, installation, and use.

(2) *Replacement VMS installations.* Should a VMS unit require replacement, a vessel owner must submit documentation to the Regional Administrator, within 3 days of installation and prior to the vessel's next trip, verifying, as described in this paragraph (e), that the new VMS unit is an operational approved system as described under § 648.9(a).

(3) *Access.* As a condition to obtaining a limited access scallop, multispecies, an Atlantic herring, a surfclam, ocean quahog, or Maine mahogany quahog permit; or as a condition of using a VMS unit; all vessel owners must allow NMFS, the USCG, and their authorized officers or designees access to the vessel's DAS data, if applicable, and to location data obtained from its VMS unit, if required, at the time of or after its transmission to the vendor or receiver, as the case may be.

(4) *Tampering.* Tampering with a VMS, a VMS unit, or a VMS signal, is prohibited. Tampering includes any activity that may affect the unit's ability to operate or signal properly, or to accurately compute or report the vessel's position.

(5) *Fishery participation notification.* (i) A vessel subject to the VMS requirements of § 648.9 and paragraphs (b) through (d) of this section that has crossed the VMS Demarcation Line under paragraph (a) of this section is deemed to be fishing under the DAS program, the General Category scallop fishery, or other fishery requiring the operation of VMS as applicable, unless prior to leaving port, the vessel's owner or authorized representative declares the vessel out of the scallop, NE multispecies, or monkfish fishery, as applicable, for a specific time period. NMFS must be notified by transmitting the appropriate VMS code through the VMS, or unless the vessel's owner or authorized representative declares the vessel will be fishing in the Eastern U.S./Canada Area, as described in § 648.85(a)(3)(ii), under the provisions of that program.

(ii) Notification that the vessel is not under the DAS program, the General Category scallop fishery, or any other fishery requiring the operation of VMS, must be received by NMFS prior to the vessel leaving port. A vessel may not change its status after the vessel leaves port or before it returns to port on any fishing trip.

(iii) DAS counting for a vessel that is under the VMS notification requirements of paragraph (b) of this section, with the exception of vessels that have elected to fish exclusively in the Eastern U.S./Canada Area on a particular trip, as described in paragraph (b)(i) of this section, begins with the first location signal received showing that the vessel crossed the VMS Demarcation Line after leaving port. DAS counting ends with the first location signal received showing that the vessel crossed the VMS Demarcation Line upon its return to port.

(iv) For those vessels that have elected to fish exclusively in the Eastern U.S./Canada Area pursuant to § 648.85(a)(3)(ii), the requirements of this paragraph (b) begin with the first location signal received showing that the vessel crossed into the Eastern U.S./Canada Area and end with the first location signal received showing that the vessel crossed out of the Eastern U.S./Canada Area upon beginning its return trip to port, unless the vessel elects to also fish outside the Eastern U.S./Canada Area on the same trip, in accordance with § 648.85(a)(3)(ii)(A).

(v) The Regional Administrator may authorize or require the use of the call–in system instead of the use of VMS, as described under paragraph (h) of this section. Furthermore, the Regional Administrator may authorize or require the use of letters of authorization as an alternative means of enforcing possession limits, if VMS cannot be used for such purposes.

(f) *Atlantic sea scallop vessel VMS notification requirements.* Less than 1 hr prior to leaving port, the owner or authorized representative of a scallop vessel that is required to use VMS as specified in paragraph (b)(1) of this section must notify the Regional Administrator by entering the appropriate VMS code that the vessel will be participating in the scallop DAS program, Area Access Program, or general category scallop fishery. VMS codes and instructions are available from the Regional Administrator upon request.

(1) *IFQ scallop vessels.* An IFQ scallop vessel that has crossed the VMS Demarcation Line specified under paragraph (a) of this section is deemed to be fishing under the IFQ program, unless prior to the vessel leaving port, the vessel's owner or authorized representative declares the vessel out of the scallop fishery (i.e., agrees that the vessel will not possess, retain, or land scallops) for a specific time period by notifying the Regional Administrator through the VMS. An IFQ scallop vessel that is fishing north of 42°20′ N. lat. is deemed to be fishing under the NGOM scallop fishery unless prior to the vessel leaving port, the vessel's owner or authorized representative declares the vessel out of the scallop fishery, as specified in paragraphs (e)(5)(i) and (ii) of this section, and the vessel does not possess, retain, or land scallops.

(2) *NGOM scallop fishery.* An NGOM scallop vessel is deemed to be fishing under the NGOM scallop fishery unless prior to the vessel leaving port, the vessel's owner or authorized representative declares the vessel out of the scallop fishery, as specified in paragraphs (e)(5)(i) and (ii) of this section, and the vessel does not possess, retain, or land scallops.

(3) *Incidental scallop fishery.* An Incidental scallop vessel that has crossed the VMS Demarcation Line on any declared fishing trip for any species is deemed to be fishing under the Incidental scallop fishery unless, prior to the vessel leaving port, the vessel's owner or authorized representative declares the vessel out of the scallop fishery, as specified in paragraphs (e)(5)(i) and (ii) of this section, and the vessel does not possess, retain, or land scallops.

(4) *Catch reports.* All scallop vessels fishing in the Sea Scallop Area Access Program as described in § 648.60 are required to submit daily reports through

VMS of scallops kept and yellowtail flounder caught (including discarded yellowtail flounder) on each Access Area trip. The VMS catch reporting requirements are specified in § 648.60(a)(9). A vessel issued an IFQ or NGOM scallop permit must report through VMS the amount of scallops kept on each trip declared as a scallop trip or on trips that are not declared through VMS as scallop trips, but on which scallops are caught incidentally. VMS catch reports by IFQ and NGOM scallop vessels must be sent prior to crossing the VMS Demarcation Line on the way back to port at the end of the trip, and must include the amount of scallop meats to be landed, the estimated time of arrival in port, the port at which the scallops will be landed, and the vessel trip report serial number recorded from that trip's vessel trip report.

(5) *Scallop vessels fishing under exemptions.* Vessels fishing under the exemptions provided by § 648.54 (a) and/or (b)(1) must comply with the exemption requirements and notify the Regional Administrator by VMS notification or by call–in notification as follows:

(i) *VMS notification for scallop vessels fishing under exemptions.* (A) Notify the Regional Administrator, via their VMS, prior to the vessel's first trip under the state waters exemption program, that the vessel will be fishing exclusively in state waters; and

(B) Notify the Regional Administrator, via their VMS, prior to the vessel's first planned trip in the EEZ, that the vessel is to resume fishing under the vessel's DAS allocation.

(ii) *Call–in notification for scallop vessels fishing under exemptions.* (A) Notify the Regional Administrator by using the call–in system and providing the following information at least 7 days prior to fishing under the exemption:

(*1*) Owner and caller name and address;

(*2*) Vessel name and permit number; and

(*3*) Beginning and ending dates of the exemption period.

(B) Remain under the exemption for a minimum of 7 days.

(C) If, under the exemption for a minimum of 7 days and wishing to withdraw earlier than the designated end of the exemption period, notify the Regional Administrator of early withdrawal from the program by calling the call–in system, providing the vessel's name and permit number and the name and phone number of the caller, and stating that the vessel is withdrawing from the exemption. The vessel may not leave port to fish in the EEZ until 48 hr after notification of early withdrawal is received by the Regional Administrator.

(D) The Regional Administrator will furnish a phone number for call–ins upon request.

(E) Such vessels must comply with the VMS notification requirements specified in paragraph (e) of this section by notifying the Regional Administrator by entering the appropriate VMS code that the vessel is fishing outside of the scallop fishery. VMS codes and instructions are available from the Regional Administrator upon request.

(g) *VMS notification requirements for other fisheries.* (1) Unless otherwise specified in this part, or via letters sent to affected permit holders under paragraph (e)(1)(iv) of this section, the owner or authorized representative of a vessel that is required to use VMS, as specified in paragraph (b) of this section, must notify the Regional Administrator of the vessel's intended fishing activity by entering the appropriate VMS code prior to leaving port at the start of each fishing trip.

(2) Notification of a vessel's intended fishing activity includes, but is not limited to, gear and DAS type to be used; area to be fished; and whether the vessel will be declared out of the DAS fishery, or will participate in the NE multispecies and monkfish DAS fisheries, including approved special management programs.

(3) A vessel cannot change any aspect of its VMS activity code outside of port, except as follows:

(i) NE multispecies vessels are authorized to change the category of DAS used (i.e., flip its DAS), as provided at § 648.85(b), or change the area declared to be fished so that the vessel may fish both inside and outside of the Eastern U.S./Canada Area on the same trip, as provided at § 648.85(a)(3)(ii)(A).

(ii) Vessels issued both a NE multispecies permit and a monkfish permit are authorized to change their DAS declaration from a NE multispecies Category A DAS to a monkfish DAS, while remaining subject to the to the NE multispecies DAS usage requirements under § 648.92(b)(1)(i), during the course of a trip, as provided at § 648.92(b)(1)(iii)(A).

(4) VMS activity codes and declaration instructions are available from the Regional Administrator upon request.

(h) *Call–in notification.* The owner of a vessel issued a limited access monkfish or red crab permit who is participating in a DAS program and who is not required to provide notification using a VMS, and a scallop vessel qualifying for a DAS allocation under the occasional category that has not elected to fish under the VMS notification requirements of paragraph (e) of this section and is not participating in the Sea Scallop Area Access program as specified in § 648.60, and any vessel that may be required by the Regional Administrator to use the call–in program under paragraph (i) of this section, are subject to the following requirements:

(1) Less than 1 hr prior to leaving port, for vessels issued a limited access NE multispecies DAS permit or, for vessels issued a limited access NE multispecies DAS permit and a limited access monkfish permit (Category C, D, F, G, or H), unless otherwise specified in this paragraph (h), and, prior to leaving port for vessels issued a limited access monkfish Category A or B permit, the vessel owner or authorized representative must notify the Regional Administrator that the vessel will be participating in the DAS program by calling the call–in system and providing the following information:

(i) Owner and caller name and phone number;

(ii) Vessel name and permit number;

(iii) Type of trip to be taken;

(iv) Port of departure; and

(v) That the vessel is beginning a trip.

(2) A DAS begins once the call has been received and a confirmation number is given by the Regional Administrator, or when a vessel leaves port, whichever occurs first, unless otherwise specified in paragraph (e)(2)(iii) of this section.

(3) Vessels issued a limited access monkfish Category C, D, F, G, or H permit that are allowed to fish as a monkfish Category A or B vessel in accordance with the provisions of § 648.92(b)(2)(i) are subject to the call–in notification requirements for limited access monkfish Category A or B vessels specified under this paragraph (h) for those monkfish DAS when there is not a concurrent NE multispecies DAS.

(4) The vessel's confirmation numbers for the current and immediately prior NE multispecies, monkfish, or red crab fishing trip must be maintained on board the vessel and provided to an authorized officer immediately upon request.

(5) At the end of a vessel's trip, upon its return to port, the vessel owner or owner's representative must call the Regional Administrator and notify him/her that the trip has ended by providing the following information:

(i) Owner and caller name and phone number;

(ii) Vessel name and permit number;

(iii) Port of landing; and

(iv) That the vessel has ended its trip.

(6) A DAS ends when the call has been received and confirmation has been given by the Regional Administrator, or when a vessel enters port at the end of a fishing trip, whichever occurs later, unless otherwise specified in paragraph (e)(2)(iii) of this section.

(7) The Regional Administrator will furnish a phone number for DAS notification call–ins upon request.

(8) Any vessel that possesses or lands per trip more than 400 lb (181 kg) of scallops; any vessel issued a limited access NE multispecies permit subject to the NE multispecies DAS program requirements that possesses or lands regulated NE multispecies, except as provided in §§ 648.10(h)(9)(ii), 648.17, and 648.89; any vessel issued a limited access monkfish permit subject to the monkfish DAS program and call–in requirement that possess or lands monkfish above the incidental catch trip limits specified in § 648.94(c); and any vessel issued a limited access red crab permit subject to the red crab DAS program and call–in requirement that possesses or lands red crab above the incidental catch trip limits specified in § 648.263(b)(1) shall be deemed to be in its respective DAS program for purposes of counting DAS and will be charged DAS from its time of sailing to landing, regardless of whether the vessel's owner or authorized representative provides adequate notification as required by paragraphs (e) through (h) of this section.

(9) *Vessels electing to use VMS.* (i) A vessel issued a limited access monkfish, Occasional scallop, or Combination permit must use the call–in system specified in paragraph (h) of this section, unless the owner of such vessel has elected to provide the notifications required by this paragraph (e), through VMS as specified under paragraph (h)(9)(ii) of this section. Any vessel issued a limited access monkfish or an Occasional scallop permit that has elected to provide notifications through VMS must continue to provide notifications through VMS for the entire fishing year.

(ii) A vessel issued a limited access monkfish or Occasional scallop permit may be authorized by the Regional Administrator to provide the notifications required by paragraph (e) of this section using the VMS specified in paragraph (b) of this section. For the vessel to become authorized, the vessel owner must provide documentation to the Regional Administrator at the time of application for a limited access permit that the vessel has installed on board an operational VMS as provided under § 648.9(a). A vessel that is authorized to use the VMS in lieu of the call–in requirement for DAS notification shall be subject to the requirements and presumptions described under paragraphs (e)(2)(i) through (v) of this section. This paragraph (h) does not apply to vessels electing to use the VMS.

(i) *Temporary authorization for use of the call–in system.* The Regional Administrator may authorize or require, on a temporary basis, the use of the call–in system of notification specified in paragraph (h) of this section, instead of using the VMS. If use of the call–in system is authorized or required, the Regional Administrator shall notify affected permit holders through a letter, notification in the **Federal Register**, e–mail, or other appropriate means.

(j) *Additional NE multispecies call–in requirements*—(1) *Spawning season call–in.* With the exception of a vessel issued a valid Small Vessel category permit or the Handgear A permit category, vessels subject to the spawning season restriction described in § 648.82 must notify the Regional Administrator of the commencement date of their 20-day period out of the NE multispecies fishery through the IVR system (or through VMS, if required by the Regional Administrator) and provide the following information:

(i) Vessel name and permit number;

(ii) Owner and caller name and phone number; and

(iii) Commencement date of the 20-day period.

(2) *Gillnet call–in.* A vessel subject to the gillnet restriction described in § 648.82 must notify the Regional Administrator of the commencement of its time out of the NE multispecies gillnet fishery using the procedure described in paragraph (k)(1) of this section.

7. In § 648.11, paragraph (i)(3)(v) is added to read as follows:

§ 648.11 At–sea sampler/observer coverage.

* * * * *

(i) * * *

(3) * * *

(v) Observers must accurately record their sampling data, write complete reports, and report accurately any observations relevant to conservation of marine resources or their environment.

* * * * *

8. In § 648.13, paragraph (d) is revised to read as follows:

§ 648.13 Transfers at sea.

* * * * *

(d) All persons are prohibited from transferring or attempting to transfer at sea summer flounder from one vessel to another vessel, except for vessels that have not been issued a Federal permit and fish exclusively in state waters.

* * * * *

9. Section 648.14 is revised to read as follows:

§ 648.14 Prohibitions.

(a) *General prohibitions.* It is unlawful for any person to do any of the following:

(1) Violate any provision of this part, the Magnuson–Stevens Act, or any regulation, notice, or permit issued under the Magnuson–Stevens Act, or any other statute administered by NOAA.

(2) Assist, aid, or abet in the commission of any act prohibited by the Magnuson–Stevens Act; or any regulation, notice, or permit issued under the Magnuson–Stevens Act; or any other statute administered by NOAA.

(3) Fail to report to the Regional Administrator within 15 days any change in the information contained in any permit or permit application.

(4) Falsify or fail to affix and maintain vessel markings as required by § 648.8.

(5) Make any false statement or provide any false information on, or in connection with, an application, declaration, record or report under this part.

(6) Fail to comply in an accurate and timely fashion with the log report, reporting, record retention, inspection, or other requirements of § 648.7, or submit or maintain false information in records and reports required to be kept or filed under § 648.7.

(7) Possess, import, export, transfer, land, or have custody or control of any species of fish regulated pursuant to this part that do not meet the minimum size provisions in this part, unless such species were harvested exclusively within state waters by a vessel not issued a permit under this part or whose permit has been surrendered in accordance with applicable regulations.

(8) Fail to comply with any sea turtle conservation measure specified in 50 CFR parts 222 and 223, including any sea turtle conservation measure implemented by notification in the **Federal Register**.

(9) Violate any provision of an in–season action to adjust trip limits, gear usage, season, area access and/or closure, or any other measure authorized by this part.

(10) *Food safety program.* (i) Purchase, receive for a commercial purpose other than transport to a testing facility, or process; or attempt to purchase, receive for commercial

purpose other than transport to a testing facility; or process, outside Maine, ocean quahogs harvested in or from the EEZ within the Maine mahogany quahog zone, except at a facility participating in an overall food safety program, operated by the official state agency having jurisdiction, that utilizes food safety–based procedures including sampling and analyzing for PSP toxin consistent with procedures used by the State of Maine for such purpose.

(ii) Land ocean quahogs outside Maine that are harvested in or from the EEZ within the Maine mahogany quahog zone, except at a facility participating in an overall food safety program, operated by the official state agency having jurisdiction, that utilizes food safety–based procedures including sampling and analyzing for PSP toxin consistent with procedures used by the State of Maine for such purpose.

(iii) Fish for, harvest, catch, possess; or attempt to fish for, harvest, catch, or possess any bivalve shellfish, including Atlantic surfclams, ocean quahogs, and mussels with the exception of sea scallops harvested only for adductor muscles and shucked at sea, or a vessel issued and possessing on board a LOA from the Regional Administrator authorizing the collection of shellfish for biological sampling and operating under the terms and conditions of said LOA, in the area of the EEZ bound by the following coordinates in the order stated:

(A) 43° 00′ N. lat., 71° 00′ W. long.;

(B) 43° 00′ N. lat., 69° 00′ W. long.;

(C) 41° 39′ N. lat., 69° 00′ W. long;

(D) 41° 39′ N. lat., 71° 00′ W. long., and then ending at the first point.

(iv) Fish for, harvest, catch, or possess; or attempt to fish for, harvest, catch, or possess; any scallops except for scallops harvested only for adductor muscles and shucked at sea, or a vessel issued and possessing on board a Letter of Authorization (LOA) from the Regional Administrator authorizing collection of shellfish for biological sampling and operating under the terms and conditions of said LOA, in the area of the EEZ bound by the following coordinates in the order stated:

(A) 41° 39′ N. lat., 71° 00′ W. long.;

(B) 41° 39′ N. lat., 69° 00′ W. long.;

(C) 40° 00′ N. lat., 69° 00′ W. long.;

(D) 40° 00′ N. lat., 71° 00′ W. long., and then ending at the first point.

(b) *Vessel and operator permits.* It is unlawful for any person to do any of the following:

(1) Fish for, take, catch, harvest or land any species of fish regulated by this part in or from the EEZ, unless the vessel has a valid and appropriate permit issued under this part and the permit is on board the vessel and has not been surrendered, revoked, or suspended.

(2) Alter, erase, or mutilate any permit issued under this part or any document submitted in support of an application for any such permit.

(3) Operate or act as operator of a vessel that fishes for or possesses any species of fish regulated by this part, or that is issued a vessel permit pursuant to this part, without having been issued and possessing a valid operator's permit.

(4) Fish for, possess, or land species regulated under this part with or from a vessel that is issued a limited access or moratorium permit under § 648.4(a) and that has had the horsepower, length, GRT, or NT of such vessel or its replacement upgraded or increased in excess of the limitations specified in § 648.4(a)(1)(i)(E) and (F).

(5) Fish for, take, catch, harvest or land any species of fish regulated by this part for which the vessel is eligible to possess under a limited access or moratorium permit prior to the time the vessel has been reissued the applicable limited access or moratorium permit by NMFS.

(6) Attempt to replace a limited access or moratorium fishing vessel, as specified at § 648.4(a)(1)(i)(E), more than once during a permit year, unless the vessel has been rendered permanently inoperable.

(7) Purchase, possess, or receive from a vessel for a commercial purpose, other than solely for transport on land, any species of fish for which a vessel permit is required under this part, unless the vessel possesses a valid vessel permit issued under this part.

(8) Transfer, remove, or offload, for a commercial purpose; or attempt to transfer, remove, land, or offload, for a commercial purpose; at sea, any species regulated under this part, unless the transferring vessel has been issued and carries on board a valid LOA from the Regional Administrator, or is otherwise exempted, and the receiving vessel has been issued and has on board a valid Federal permit for the species that is being transferred.

(9) Fish for, possess, or retain fish, during a fishing trip, aboard a federally permitted vessel that, in the absence of an emergency, has not been operating under its own power for the entire trip.

(c) *Dealer permits.* It is unlawful for any person to do any of the following:

(1) Purchase, possess or receive for a commercial purpose; or attempt to purchase possess or receive for a commercial purpose; other than solely for transport on land, any species regulated under this part unless in possession of a valid dealer permit issued under this part, except that this prohibition does not apply to species that are purchased or received from a vessel not issued a permit under this part that fished exclusively in state waters, or pursuant to the § 648.17 NAFO Regulatory Area exemptions.

(2) Sell, barter, trade, or transfer; or attempt to sell, barter, trade, or transfer; other than solely for transport on land, any Atlantic herring, multispecies, or monkfish from a vessel that fished for such species in the EEZ, unless the dealer or transferee has a valid dealer permit issued under § 648.6. A person who purchases and/or receives Atlantic herring at sea for his own personal use as bait, and does not have purse seine, mid–water trawl, pelagic gillnet, sink gillnet, or bottom trawl gear on board, is exempt from the requirement to possess an Atlantic herring dealer permit.

(d) *VMS.* It is unlawful for any person to do any of the following:

(1) Tamper with, damage, destroy, alter, or in any way distort, render useless, inoperative, ineffective, or inaccurate the VMS, VMS unit, or VMS signal required to be installed on or transmitted by vessel owners or operators required to use a VMS by this part.

(2) Fail to submit the appropriate VMS activity code for the intended activity at the appropriate time, in accordance with § 648.10.

(e) *Observer program.* It is unlawful for any person to do any of the following:

(1) Assault, resist, oppose, impede, harass, intimidate, or interfere with or bar by command, impediment, threat, or coercion any NMFS–approved observer or sea sampler conducting his or her duties; or any authorized officer conducting any search, inspection, investigation, or seizure in connection with enforcement of this part; or any official designee of the Regional Administrator conducting his or her duties, including those duties authorized in § 648.7(g).

(2) Refuse to carry onboard a vessel an observer or sea sampler if requested to do so by the Regional Administrator or the Regional Administrator's designee.

(3) Fail to provide information, notification, accommodations, access, or reasonable assistance to either a NMFS–approved observer or sea sampler conducting his or her duties aboard a vessel as specified in § 648.11.

(4) Submit false or inaccurate data, statements, or reports.

(f) *Research and experimental fishing.* It is unlawful for any person to violate any terms of a letter authorizing

experimental fishing pursuant to § 648.12 or fail to keep such letter on board the vessel during the period of the experiment.

(g) *Squid, mackerel, and butterfish*—(1) *All persons.* Unless participating in a research activity as described in § 648.21(g), it is unlawful for any person to do any of the following:

(i) *Possession and landing.* Take, retain, possess, or land more mackerel, squid or butterfish than specified under, or after the effective date of, a notification issued under § 648.22.

(ii) *Transfer and purchase.* (A) Purchase or otherwise receive for a commercial purpose; other than solely for transport on land; mackerel, squid, or butterfish caught by a vessel that has not been issued a Federal mackerel, squid, and butterfish vessel permit, unless the vessel fishes exclusively in state waters.

(B) Transfer *Loligo*, *Illex*, or butterfish within the EEZ, unless the vessels participating in the transfer have been issued a valid *Loligo* and butterfish or *Illex* moratorium permit and are transferring species for which the vessels are permitted, or have a valid squid/butterfish incidental catch permit and the appropriate LOA from the Regional Administrator.

(2) *Vessel and operator permit holders.* Unless participating in a research activity as described in § 648.21(g), it is unlawful for any person owning or operating a vessel issued a valid mackerel, squid, and butterfish fishery permit, or issued an operator's permit, to do any of the following:

(i) *General requirement.* Fail to comply with any measures implemented pursuant to § 648.21.

(ii) *Possession and landing.* (A) Possess more than the incidental catch allowance of *Loligo* or butterfish, unless issued a *Loligo* squid and butterfish fishery moratorium permit.

(B) Possess more than the incidental catch allowance of *Illex* squid, unless issued an *Illex* squid moratorium permit.

(C) Take, retain, possess, or land mackerel, squid or butterfish in excess of a possession allowance specified in § 648.22.

(D) Possess 5,000 lb (2.27 mt) or more of butterfish, unless the vessel meets the minimum mesh size requirement specified in § 648.23(a)(2).

(E) Take, retain, possess, or land mackerel, squid, or butterfish after a total closure specified under § 648.22.

(iii) *Gear and vessel requirements.* (A) Fish with or possess nets or netting that do not meet the gear requirements for Atlantic mackerel, *Loligo*, *Illex*, or butterfish specified in § 648.23(a); or that are modified, obstructed, or constricted, if subject to the minimum mesh requirements, unless the nets or netting are stowed in accordance with § 648.23(b) or the vessel is fishing under an exemption specified in § 648.23(a)(3)(ii).

(B) Fish for, retain, or possess Atlantic mackerel in or from the EEZ with a vessel that exceeds either 165 ft (50.3 m) in length overall and 750 GRT, or a shaft horsepower (shp) of 3,000 shp, except for the retention and possession of Atlantic mackerel for processing by a vessel holding a valid at–sea processor permit pursuant to § 648.6(a)(2). It shall be presumed that the Atlantic mackerel on board were harvested in or from the EEZ, unless the preponderance of reliable evidence available indicates otherwise.

(C) Enter or fish in the mackerel, squid, and butterfish bottom trawling restricted areas, as described in § 648.23(a)(4).

(3) *Charter/party restrictions.* Unless participating in a research activity as described in § 648.21(g), it is unlawful for the owner and operator of a party or charter boat issued a mackerel, squid, and butterfish fishery permit (including a moratorium permit), when the boat is carrying passengers for hire, to do any of the following:

(i) Violate any recreational fishing measures established pursuant to § 648.21(d).

(ii) Sell or transfer mackerel, squid, or butterfish to another person for a commercial purpose.

(iii) Carry passengers for hire while fishing commercially under a mackerel, squid, and butterfish fishery permit.

(4) *Presumption.* For purposes of this part, the following presumption applies: All mackerel and butterfish possessed on board a party or charter boat issued a mackerel, squid, and butterfish fishery permit are deemed to have been harvested from the EEZ.

(h) *Atlantic salmon.* Unless participating in a research activity as described in § 648.21(g), it is unlawful for any person to do any of the following:

(1) *Possession and landing.* (i) Use any vessel of the United States for taking, catching, harvesting, fishing for, or landing any Atlantic salmon taken from or in the EEZ. It shall be presumed that the Atlantic salmon on board were harvested in or from the EEZ, unless the preponderance of reliable evidence available indicates otherwise.

(ii) Transfer, directly or indirectly; or attempt to transfer, directly or indirectly; to any vessel any Atlantic salmon taken in or from the EEZ.

(2) [Reserved]

(i) *Atlantic sea scallops*—(1) *All persons.* It is unlawful for any person to do any of the following:

(i) *Permit requirement.* Fish for, possess, or land, scallops without the vessel having been issued and carrying onboard a valid scallop permit in accordance with § 648.4(a)(2), unless the scallops were harvested by a vessel that has not been issued a Federal scallop permit and fishes for scallops exclusively in state waters.

(ii) *Gear and crew requirements.* Have a shucking or sorting machine on board a vessel while in possession of more than 400 lb (181.4 kg) of shucked scallops, unless that vessel has not been issued a scallop permit and fishes exclusively in state waters.

(iii) *Possession and landing.* (A) Fish for or land per trip, or possess at any time prior to a transfer to another person for a commercial purpose, other than solely for transport on land:

(*1*) In excess of 40 lb (18.1 kg) of shucked scallops at any time, 5 bu (1.76 hL) of in–shell scallops shoreward of the VMS Demarcation Line, or 10 bu (3.52 hL) of in–shell scallops seaward of the VMS Demarcation Line, unless:

(*i*) The scallops were harvested by a vessel that has not been issued a scallop permit and fishes for scallops exclusively in state waters.

(*ii*) The scallops were harvested by a vessel that has been issued and carries on board a limited access scallop permit and is properly declared into the scallop DAS or Area Access program.

(*iii*) The scallops were harvested by a vessel that has been issued and carries on board an IFQ scallop permit and is properly declared into the IFQ scallop fishery.

(*iv*) The scallops were harvested by a vessel that has been issued and carries on board an NGOM scallop permit, and is properly declared into the NGOM scallop management area, and the NGOM TAC specified in § 648.62 has not been harvested.

(*v*) The scallops were harvested by a vessel that has been issued and carries on board an Incidental scallop permit allowing up to 40 lb (18.1 kg) of shucked or 5 bu (1.76 hL) of in–shell scallops; is carrying an at–sea observer; and is authorized by the Regional Administrator to have, and the vessel does not exceed, an increased possession limit to compensate for the cost of carrying the observer.

(*2*) In excess of 200 lb (90.7 kg) of shucked scallops at any time, 25 bu (8.8 hL) of in–shell scallops inside the VMS Demarcation Line, or 50 bu (17.6 hL) of in–shell scallops seaward of the VMS Demarcation Line, unless:

(*i*) The scallops were harvested by a vessel that has not been issued a scallop permit and fishes for scallops exclusively in state waters.

(*ii*) The scallops were harvested by a vessel that has been issued and carries on board a limited access scallop permit and is properly declared into the scallop DAS or Area Access program.

(*iii*) The scallops were harvested by a vessel that has been issued and carries on board an IFQ scallop permit issued pursuant to § 648.4(a)(2)(ii)(A), is fishing outside of the NGOM scallop management area, and is properly declared into the general category scallop fishery.

(*iv*) The scallops were harvested by a vessel that has been issued and carries on board a scallop permit and the vessel is fishing in accordance with the provisions of the state waters exemption program specified in § 648.54.

(*v*) The scallops were harvested by a vessel that has been issued and carries on board an NGOM scallop permit allowing up to 200 lb (90.7 kg) of shucked or 25 bu (8.8 hL) of in–shell scallops; is carrying an at–sea observer; and is authorized by the Regional Administrator to have, and the vessel does not exceed, an increased possession limit to compensate for the cost of carrying the observer.

(*3*) In excess of 400 lb (181.4 kg) of shucked scallops at any time, 50 bu (17.6 hL) of in–shell scallops shoreward of the VMS Demarcation Line, or 100 bu (35.2 hL) in–shell scallops seaward of the VMS Demarcation Line, unless:

(*i*) The scallops were harvested by a vessel that has not been issued a scallop permit and fishes for scallops exclusively in state waters.

(*ii*) The scallops were harvested by a vessel that has been issued and carries on board a limited access scallop permit issued pursuant to § 648.4(a)(2)(i) and is properly declared into the scallop DAS or Area Access program.

(*iii*) The scallops were harvested by a vessel that has been issued and carries on board a scallop permit and the vessel is fishing in accordance with the provisions of the state waters exemption program specified in § 648.54.

(*iv*) The scallops were harvested by a vessel that has been issued and carries on board an IFQ scallop permit, is carrying an at–sea observer, and is authorized by the Regional Administrator to have, and the vessel does not exceed, an increased possession limit to compensate for the cost of carrying the observer.

(iv) *Transfer and purchase.* (A) Land, offload, remove, or otherwise transfer; or attempt to land, offload, remove or otherwise transfer; scallops from one vessel to another, unless that vessel has not been issued a scallop permit and fishes exclusively in state waters.

(B) Sell, barter, or trade, or otherwise transfer scallops from a vessel; or attempt to sell, barter or trade, or otherwise transfer scallops from a vessel; for a commercial purpose, unless the vessel has been issued a valid scallop permit pursuant to § 648.4(a)(2), or the scallops were harvested by a vessel that has not been issued a scallop permit and fishes for scallops exclusively in state waters.

(C) Purchase, possess, or receive for commercial purposes; or attempt to purchase or receive for commercial purposes; scallops from a vessel other than one issued a valid limited access or general scallop permit, unless the scallops were harvested by a vessel that has not been issued a scallop permit and fishes for scallops exclusively in state waters.

(D) Sell or transfer to another person for a commercial purpose, other than solely for transport on land, any scallops harvested from the EEZ by a vessel issued a Federal scallop permit, unless the transferee has a valid scallop dealer permit.

(v) *Ownership cap.* Have an ownership interest in more than 5 percent of the total number of vessels issued limited access scallop permits and confirmations of permit history, except as provided in § 648.4(a)(2)(i)(M).

(vi) *Closed area requirements.* (A) Fish for scallops in, or possess or land scallops from, the areas specified in §§ 648.58 and 648.61.

(B) Transit or be in the areas described in §§ 648.58 or 648.61 in possession of scallops, except when all fishing gear is unavailable for immediate use as defined in § 648.23(b), or unless there is a compelling safety reason to be in such areas.

(vii) *Scallop sectors.* Fail to comply with any of the requirements or restrictions for general category scallop sectors specified in § 648.63.

(viii) *Scallop research.* Fail to comply with any of the provisions specified in § 648.56.

(ix) *Presumption.* For purposes of this section, the following presumption applies: Scallops that are possessed or landed at or prior to the time when the scallops are received by a dealer, or scallops that are possessed by a dealer, are deemed to be harvested from the EEZ, unless the preponderance of evidence demonstrates that such scallops were harvested by a vessel without a scallop permit and fishing exclusively for scallops in state waters.

(2)*Limited access scallop vessel permit holders.* It is unlawful for any person owning or operating a vessel issued a limited access scallop permit under § 648.4(a)(2) to do any of the following:

(i) *Minimum shell height.* Land, or possess at or after landing, in–shell scallops smaller than the minimum shell height specified in § 648.50(a).

(ii) *Vessel, gear, and crew restrictions.* (A) Possess more than 40 lb (18.1 kg) of shucked, or 5 bu (1.76 hL) of in–shell scallops, or participate in the scallop DAS or Area Access programs, while in the possession of trawl nets that have a maximum sweep exceeding 144 ft (43.9 m), as measured by the total length of the footrope that is directly attached to the webbing of the net, except as specified in § 648.51(a)(1), unless the vessel is fishing under the Northeast multispecies or monkfish DAS program.

(B) While under or subject to the DAS allocation program, in possession of more than 40 lb (18.1 kg) of shucked scallops or 5 bu (1.76 hL) of in–shell scallops, or fishing for scallops in the EEZ:

(*1*) Fish with, or have available for immediate use, trawl nets of mesh smaller than the minimum size specified in § 648.51(a)(2).

(*2*) Fail to comply with any chafing gear or other gear obstruction restrictions specified in § 648.51(a)(3).

(*3*) Fail to comply with the dredge vessel gear restrictions specified in § 648.51(b).

(*4*) Fish under the small dredge program specified in § 648.51(e), with, or while in possession of, a dredge that exceeds 10.5 ft (3.2 m) in overall width, as measured at the widest point in the bail of the dredge.

(*5*) Fish under the small dredge program specified in § 648.51(e) with more than five persons on board the vessel, including the operator, unless otherwise authorized by the Regional Administrator or unless participating in the Area Access Program pursuant to the requirements specified in § 648.60.

(*6*) Participate in the DAS allocation program with more persons on board the vessel than the number specified in § 648.51(c), including the operator, when the vessel is not docked or moored in port, unless otherwise authorized by the Regional Administrator, or unless participating in the Area Access Program pursuant to the requirements specified in § 648.60.

(*7*) Have a shucking or sorting machine on board a vessel that shucks scallops at sea while fishing under the DAS allocation program, unless otherwise authorized by the Regional Administrator.

(*8*) Fish with, possess on board, or land scallops while in possession of

trawl nets, when fishing for scallops under the DAS allocation program, unless exempted as provided for in § 648.51(f).

(*9*) Fail to comply with the restriction on twine top described in § 648.51(b)(4)(iv).

(iii) *Possession and landing.* (A) Land scallops after using up the vessel's annual DAS allocation or land scallops on more than one trip per calendar day when not participating under the DAS allocation program pursuant to § 648.10, unless exempted from DAS allocations as provided in the state waters exemption, specified in § 648.54.

(B) Fish for, possess, or land more than 50 bu (17.62 hL) of in–shell scallops once inside the VMS Demarcation Line on or by a vessel that, at any time during the trip, fished in or transited any area south of 42°20′ N. lat; or fished in any Sea Scallop Area Access Program specified in § 648.60, except as provided in the state waters exemption, as specified in § 648.54.

(C) Fish for or land per trip, or possess at any time, scallops in the NGOM scallop management area after notification in the **Federal Register** that the NGOM scallop management area TAC has been harvested, as specified in § 648.62, unless the vessel possesses or lands scallops that were harvested south of 42°20′ N. lat. and the vessel only transits the NGOM scallop management area with the vessel's fishing gear properly stowed and unavailable for immediate use in accordance with § 648.23.

(iv) *DAS.* (A) Fish for, possess, or land scallops after using up the vessel's annual DAS allocation and Access Area trip allocations, or when not properly declared into the DAS or an Area Access program pursuant to § 648.10, unless the vessel has been issued an LAGC scallop permit pursuant to § 648.4(a)(2)(ii) and has properly declared into a general category scallop fishery, unless exempted from DAS allocations as provided in state waters exemption, specified in § 648.54.

(B) Combine, transfer, or consolidate DAS allocations, except as allowed for one–for–one Access Area trip exchanges as specified in § 648.60(a)(3)(ii).

(C) Fail to comply with any requirement for declaring in or out of the DAS allocation program or other notification requirements specified in § 648.10.

(v) *VMS requirements.* (A) Fail to have an approved, operational, and functioning VMS unit that meets the specifications of § 648.9 on board the vessel at all times, unless the vessel is not subject to the VMS requirements specified in § 648.10.

(B) If the vessel is not subject to VMS requirements specified in § 648.10(b), fail to comply with the requirements of the call–in system specified in § 648.10(c).

(vi) *Scallop access area program.* (A) Fail to comply with any of the provisions and specifications of § 648.60.

(B) Declare, initiate a trip into, or fish in the areas specified in § 648.59(b) through (d) after the effective date of the notice in the **Federal Register** stating that the yellowtail flounder TAC has been harvested as specified in § 648.85(c).

(C) Possess or retain yellowtail flounder in or from the areas specified in § 648.59(b) through (d) after the effective date of the notice in the **Federal Register** stating that the yellowtail flounder TAC has been harvested as specified in § 648.85(c).

(D) Possess more than 50 bu (17.6 hL) of in–shell scallops outside the boundaries of a Sea Scallop Access Area by a vessel that is declared into the Area Access Program as specified in § 648.60.

(E) Fish for, possess, or land scallops in or from any Sea Scallop Access Area without an observer on board, unless the vessel owner, operator, or manager has received a waiver to carry an observer for the specified trip and area fished.

(vii) *State waters exemption program.* Fail to comply with any requirement for participating in the State Waters Exemption Program specified in § 648.54.

(3) *LAGC scallop vessels.* It is unlawful for any person owning or operating a vessel issued an LAGC scallop permit to do any of the following:

(i) *Permit requirements.* (A) Fail to comply with the LAGC scallop permit restrictions as specified in § 648.4(a)(2)(ii)(G) through (O).

(B) Fish for, possess, or land scallops on a vessel that is declared out of scallop fishing unless the vessel has been issued an Incidental scallop permit.

(ii) *Gear requirements.* (A) Possess or use trawl gear that does not comply with any of the provisions or specifications in § 648.51(a), unless the vessel is fishing under the Northeast multispecies or monkfish DAS program.

(B) Possess or use dredge gear that does not comply with any of the provisions or specifications in § 648.51(b).

(iii) *Possession and landing.* (A) Land scallops more than once per calendar day.

(B) Possess in–shell scallops while in possession of the maximum allowed amount of shucked scallops specified for each LAGC scallop permit category in § 648.52.

(C) Declare into, or leave port for, the NGOM scallop management area after the effective date of a notification published in the **Federal Register** stating that the general category scallop TAC has been harvested as specified in § 648.52 or § 648.62.

(D) Fish for, possess, or land scallops in or from the NGOM scallop management area after the effective date of a notification published in the **Federal Register** that the NGOM scallop management area TAC has been harvested, as specified in § 648.62, unless the vessel possesses or lands scallops that were harvested south of 42°20′ N. lat., the vessel is transiting the NGOM scallop management area, and the vessel's fishing gear is properly stowed and unavailable for immediate use in accordance with § 648.23.

(E) Fish for, land, or possess more than 40 lb (18.1 kg) of shucked, or 5 bu (1.76 hL) of in–shell scallops at any time after 10 days from being notified that his or her appeal for an LAGC scallop permit has been denied and that the denial is the final decision of the Department of Commerce, unless the vessel holds a valid Incidental scallop permit.

(iv) *VMS requirements.* (A) Fail to comply with any of the VMS requirements specified in §§ 648.10, 648.60, or 648.62.

(B) Fail to comply with any requirement for declaring in or out of the general category scallop fishery or other notification requirements specified in § 648.10(b).

(v) *Observer program.* (A) Refuse, or fail, to carry an observer after being requested to carry onboard a vessel an observer by the Regional Administrator or the Regional Administrator's designee.

(B) Fail to provide information, notification, accommodations, access, or reasonable assistance to a NMFS–approved observer conducting his or her duties aboard a vessel, as specified in § 648.11.

(vi) *Scallop access area program.* (A) Fail to comply with any of the requirements specified in § 648.60.

(B) Declare into or leave port for an area specified in § 648.59(b) through (d) after the effective date of a notification published in the **Federal Register** stating that the general category scallop TAC has been harvested or that the number of General Category trips have been taken, as specified in § 648.60.

(C) Declare into, or leave port for, an area specified in § 648.59(b) through (d) after the effective date of a notification

published in the **Federal Register** stating that the yellowtail flounder TAC has been harvested as specified in § 648.85(c).

(D) Fish for, possess, or land scallops in or from any Sea Scallop Access Area without an observer on board, unless the vessel owner, operator, or manager has received a waiver to carry an observer for the specified trip and area fished.

(vii) Sectors. Fail to comply with any of the requirements and restrictions for General Category sectors and harvesting cooperatives specified in § 648.63.

(4) *IFQ scallop permit.* It is unlawful for any person owning or operating a vessel issued an IFQ scallop permit to do any of the following:

(i) *Possession and landing.* (A) Fish for or land per trip, or possess at any time, in excess of 400 lb (181.4 kg) of shucked, or 50 bu (17.6 hL) of in–shell scallops shoreward of the VMS Demarcation Line, unless the vessel is participating in the Area Access Program specified in § 648.60; is carrying an observer as specified in § 648.11; and, an increase in the possession limit is authorized by the Regional Administrator and not exceeded by the vessel, as specified in § 648.60(d)(2).

(B) Fish for or land per trip, or possess at any time, in excess of 200 lb (90.7 kg) of shucked or 25 bu (8.8 hL) of in–shell scallops in the NGOM scallop management area, unless the vessel is seaward of the VMS Demarcation Line and in possession of no more than 50 bu (17.6 hL) in–shell scallops, or when the vessel is not declared into the NGOM scallop management area and is transiting the NGOM scallop management area with gear properly stowed and unavailable for immediate use in accordance with § 648.23.

(C) Possess more than 100 bu (35.2 hL) of in–shell scallops seaward of the VMS Demarcation Line and not participating in the Access Area Program, or possess or land per trip more than 50 bu (17.6 hL) of in–shell scallops shoreward of the VMS Demarcation Line, unless exempted from DAS allocations as provided in § 648.54.

(D) Possess more than 50 bu (17.6 hL) of in–shell scallops, as specified in § 648.52(d), outside the boundaries of a Sea Scallop Access Area by a vessel that is declared into the Area Access Program as specified in § 648.60.

(E) Fish for, possess, or land scallops after the effective date of a notification in the **Federal Register** that the quarterly TAC specified in § 648.53(a)(8) has been harvested.

(F) Fish for, possess, or land scallops in excess of a vessel's IFQ.

(G) Fish for, possess, or land more than 40 lb (18.1 kg) of shucked scallops, or 5 bu (1.76 hL) of in–shell scallops shoreward of the VMS Demarcation Line, or 10 bu (3.52 hL) of in–shell scallops seaward of the VMS Demarcation Line, when the vessel is not declared into the IFQ scallop fishery, unless the vessel is fishing in compliance with all of the requirements of the state waters exemption program, specified at § 648.54.

(H) Land scallops more than once per calendar day.

(ii) *Owner and allocation cap.* (A) Have an ownership interest in vessels that collectively are allocated more than 5 percent of the total IFQ scallop TAC as specified at § 648.53(a)(5)(ii) and (iii).

(B) Have an IFQ allocation on an IFQ scallop vessel of more than 2 percent of the total IFQ scallop TAC as specified in § 648.53(a)(5).

(iii) *IFQ Transfer Program.* (A) Apply for an IFQ transfer that will result in the transferee having an aggregate ownership interest in more than 5 percent of the total IFQ scallop TAC.

(B) Apply for an IFQ transfer that will result in the receiving vessel having an IFQ allocation in excess of 2 percent of the total IFQ scallop TAC.

(C) Fish for, possess, or land transferred IFQ prior to approval of the transfer by the Regional Administrator as specified in § 648.53(h)(5).

(D) Request to transfer IFQ that has already been temporarily transferred from an IFQ scallop vessel in the same fishing year.

(E) Transfer scallop IFQ to a vessel after the transferring vessel has landed scallops in the same fishing year.

(F) Transfer a portion of a vessel's scallop IFQ.

(G) Transfer scallop IFQ to, or receive scallop IFQ from, a vessel that has not been issued a valid IFQ scallop permit.

(iv) *Cost Recovery Program.* Fail to comply with any of the cost recovery requirements specified under § 648.53(g)(4).

(5) *NGOM scallop permit.* It is unlawful for any person owning or operating a vessel issued an NGOM scallop permit to do any of the following:

(i) Declare into or leave port for a scallop trip, or fish for or possess scallops outside of the NGOM Scallop Management Area as defined in § 648.62.

(ii) Fish for or land per trip, or possess at any time, in excess of 200 lb (90.7 kg) of shucked or 25 bu (8.81 hL) of in–shell scallops in or from the NGOM scallop management area, or seaward of the VMS Demarcation Line more than 50 bu (17.6 hL) of in–shell scallops.

(iii) Fish for, possess, or land scallops after the effective date of notification in the **Federal Register** that the NGOM scallop management area TAC has been harvested.

(6) *Incidental scallop permit.* It is unlawful for any person owning or operating a vessel issued an Incidental scallop permit to fish for, possess, or retain, more than 40 lb (18.1 kg) of shucked scallops, or 5 bu (1.76 hL) of in–shell scallops shoreward of the VMS Demarcation Line, or 10 bu (3.52 hL) of in–shell scallops while seaward of the VMS Demarcation Line.

(j) *Atlantic surfclam and ocean quahog.* It is unlawful for any person to do any of the following:

(1) *Possession and landing.* (i) Fish for surfclams or ocean quahogs in any area closed to surfclam or ocean quahog fishing.

(ii) Shuck surfclams or ocean quahogs harvested in or from the EEZ at sea, unless permitted by the Regional Administrator under the terms of § 648.74.

(iii) Fish for, retain, or land both surfclams and ocean quahogs in or from the EEZ on the same trip.

(iv) Fish for, retain, or land ocean quahogs in or from the EEZ on a trip designated as a surfclam fishing trip under § 648.15(b); or fish for, retain, or land surfclams in or from the EEZ on a trip designated as an ocean quahog fishing trip under § 648.15(b).

(v) Fail to offload any surfclams or ocean quahogs harvested in the EEZ from a trip discontinued pursuant to § 648.15(b) prior to commencing fishing operations in waters under the jurisdiction of any state.

(vi) Land or possess any surfclams or ocean quahogs harvested in or from the EEZ without having been issued, or in excess of, an individual allocation.

(2) *Transfer and purchase.* (i) Receive for a commercial purpose other than solely for transport on land, surfclams or ocean quahogs harvested in or from the EEZ, whether or not they are landed under an allocation under § 648.70, unless issued a dealer/processor permit under this part.

(ii) Transfer any surfclams or ocean quahogs harvested in or from the EEZ to any person for a commercial purpose, other than solely for transport on land, without a surfclam or ocean quahog processor or dealer permit.

(iii) Offload unshucked surfclams or ocean quahogs harvested in or from the EEZ outside the Maine mahogany quahog zone from vessels not capable of carrying cages, other than directly into cages.

(3) *Gear and tags requirements.* (i) Alter, erase, mutilate, duplicate or cause to be duplicated, or steal any cage tag issued under this part.

(ii) Produce, or cause to be produced, cage tags required under this part without written authorization from the Regional Administrator.

(iii) Tag a cage with a tag that has been rendered null and void or with a tag that has been previously used.

(iv) Tag a cage of surfclams with an ocean quahog cage tag, or tag a cage of ocean quahogs with a surfclam cage tag.

(v) Possess an empty cage to which a cage tag required by § 648.75 is affixed, or possess any cage that does not contain surfclams or ocean quahogs and to which a cage tag required by § 648.75 is affixed.

(vi) Land or possess, after offloading, any cage holding surfclams or ocean quahogs without a cage tag or tags required by § 648.75, unless the person can demonstrate the inapplicability of the presumptions set forth in § 648.75(h).

(vii) Sell null and void tags.

(4) *VMS requirements.* (i) Fail to maintain an operational VMS unit as specified in § 648.9, and comply with any of the notification requirements specified in § 648.15(b) including:

(A) Fish for, land, take, possess, or transfer surfclams or ocean quahogs under an open access surfclam or ocean quahog permit without having provided proof to the Regional Administrator that the vessel has a fully functioning VMS unit on board the vessel and declared a surfclam, ocean quahog, or Maine mahogany quahog fishing activity code via the VMS unit prior to leaving port as specified at § 648.15(b).

(B) Fish for, land, take, possess, or transfer ocean quahogs under a limited access Maine mahogany quahog permit without having provided proof to the Regional Administrator of NMFS that the vessel has a fully functioning VMS unit on board the vessel and declared a fishing trip via the VMS unit as specified at § 648.15(b).

(5) *Maine mahogany quahog zone.* (i) Land unshucked surfclams or ocean quahogs harvested in or from the EEZ outside the Maine mahogany quahog zone in containers other than cages from vessels capable of carrying cages.

(ii) Land unshucked surfclams and ocean quahogs harvested in or from the EEZ within the Maine mahogany quahog zone in containers other than cages from vessels capable of carrying cages unless, with respect to ocean quahogs, the vessel has been issued a Maine mahogany quahog permit under this part and is not fishing for an individual allocation of quahogs under § 648.70.

(iii) Offload unshucked surfclams harvested in or from the EEZ within the Maine mahogany quahog zone from vessels not capable of carrying cages, other than directly into cages.

(iv) Offload unshucked ocean quahogs harvested in or from the EEZ within the Maine mahogany quahog zone from vessels not capable of carrying cages, other than directly into cages, unless the vessel has been issued a Maine mahogany quahog permit under this part and is not fishing for an individual allocation of quahogs under § 648.70.

(v) Land or possess ocean quahogs harvested in or from the EEZ within the Maine mahogany quahog zone after the effective date published in the **Federal Register** notifying participants that Maine mahogany quahog quota is no longer available for the respective fishing year, unless the vessel is fishing for an individual allocation of ocean quahogs under § 648.70.

(7) *Presumptions.* For purposes of this part, the following presumptions apply:

(i) Possession of surfclams or ocean quahogs on the deck of any fishing vessel in closed areas, or the presence of any part of a vessel's gear in the water in closed areas is prima facie evidence that such vessel was fishing in violation of the provisions of the Magnuson–Stevens Act and these regulations.

(ii) Surfclams or ocean quahogs landed from a trip for which notification was provided under § 648.15(b) or § 648.70(b) are deemed to have been harvested in the EEZ and count against the individual's annual allocation, unless the vessel has a valid Maine mahogany quahog permit issued pursuant to § 648.4(a)(4)(i) and is not fishing for an individual allocation under § 648.70.

(iii) Surfclams or ocean quahogs found in cages without a valid state tag are deemed to have been harvested in the EEZ and are deemed to be part of an individual's allocation, unless the vessel has a valid Maine mahogany quahog permit issued pursuant to § 648.4(a)(4)(i) and is not fishing for an individual allocation under § 648.70; or, unless the preponderance of available evidence demonstrates that he/she has surrendered his/her surfclam and ocean quahog permit issued under § 648.4 and he/she conducted fishing operations exclusively within waters under the jurisdiction of any state. Surfclams and ocean quahogs in cages with a Federal tag or tags, issued and still valid pursuant to this part, affixed thereto are deemed to have been harvested by the individual allocation holder to whom the tags were issued or transferred under § 648.70 or § 648.75(b).

(k) *NE multispecies*—(1) *Permit requirements for all persons.* It is unlawful for any person, including any owner or operator of a vessel issued a valid Federal NE multispecies permit or letter under § 648.4(a)(1)(i), unless otherwise specified in § 648.17, to do any of the following:

(i) Fish for, possess, or land NE multispecies, unless:

(A) The NE multispecies are being fished for or were harvested in or from the EEZ by a vessel holding a valid Federal NE multispecies permit under this part, or a letter under § 648.4(a)(1), and the operator on board such vessel has a valid operator's permit and has it on board the vessel.

(B) The NE multispecies were harvested by a vessel not issued a Federal NE multispecies permit, nor eligible to renew or be reissued a limited access NE multispecies permit as specified in § 648.4 (b)(2), that fishes for NE multispecies exclusively in state waters.

(C) The NE multispecies were harvested in or from the EEZ by a recreational fishing vessel.

(D) Any haddock and up to 100 lb of other regulated NE multispecies were harvested by a vessel that has an All Areas limited access herring permit and/or an Areas 2 and 3 limited access herring permit on a trip that did not use a NE multispecies DAS, is subject to the requirements specified in § 648.80(d) and (e), and may not sell the fish for human consumption.

(E) Otherwise specified in § 648.17.

(ii) Land, offload, remove, or otherwise transfer; or attempt to land, offload, remove or otherwise transfer; NE multispecies from one vessel to another vessel, unless both vessels have not been issued Federal NE multispecies permits and both fish exclusively in state waters, unless authorized in writing by the Regional Administrator, or otherwise allowed.

(iii) Sell, barter, trade, or otherwise transfer; or attempt to sell, barter, trade, or otherwise transfer; for a commercial purpose any NE multispecies from a trip, unless:

(A) The vessel is holding a Federal NE multispecies permit, or a letter under § 648.4(a)(1), and is not fishing under the charter/party vessel restrictions specified in § 648.89.

(B) The NE multispecies were harvested by a vessel without a Federal NE multispecies permit that fishes for NE multispecies exclusively in state waters.

(C) Or as otherwise specified in § 648.17.

(iv) Operate or act as an operator of a vessel fishing for or possessing NE multispecies in or from the EEZ, or holding a Federal NE multispecies vessel permit without having been issued and possessing a valid operator's permit.

(2) *Permit requirements for vessel and operator permit holders.* It is unlawful for any owner or operator of a vessel issued a valid Federal NE multispecies permit or letter under § 648.4(a)(1)(i), unless otherwise specified in § 648.17, to do any of the following:

(i) Fish for, possess, or land NE multispecies with or from a vessel that has had the length, GRT, or NT of such vessel, or its replacement, increased or upgraded in excess of limitations specified in § 648.4(a)(1)(i)(E) and (F).

(ii) Fish for, possess, or land NE multispecies with or from a vessel that has had the horsepower of such vessel or its replacement upgraded or increased in excess of the limitations specified in § 648.4(a)(1)(i)(E) and (F).

(3) *Dealer requirements.* (i) Purchase, possess, or receive as a dealer, or in the capacity of a dealer, regulated species in excess of the possession limits specified in § 648.85 or § 648.86 applicable to a vessel issued a NE multispecies permit, unless otherwise specified in § 648.17, or unless the regulated species are purchased or received from a member of an approved Sector, as specified at § 648.87, that is exempt from such possession limits in accordance with an approved Sector Operations Plan.

(ii) Sell or transfer to another person for a commercial purpose, other than solely for transport on land, any NE multispecies harvested from the EEZ by a vessel issued a Federal NE multispecies permit, unless the transferee has a valid NE multispecies dealer permit.

(4) *NAFO.* It is unlawful for any owner or operator of a vessel issued a valid NE multispecies permit or letter under § 648.4(a)(1)(i), to fail to comply with the exemption specifications in § 648.17.

(5) *Regulated Mesh Areas.* It is unlawful for any person, including any owner or operator of a vessel issued a valid Federal NE multispecies permit or letter under § 648.4(a)(1)(i), unless otherwise specified in § 648.17, to do any of the following:

(i) Violate any of the provisions of § 648.80, including paragraphs (a)(5), the Small–mesh Northern Shrimp Fishery Exemption Area; (a)(6), the Cultivator Shoal Whiting Fishery Exemption Area; (a)(9), Small–mesh Area 1/Small–mesh Area 2; (a)(10), the Nantucket Shoals Dogfish Fishery Exemption Area; (a)(11), the GOM Scallop Dredge Exemption Area; (a)(12), the Nantucket Shoals Mussel and Sea Urchin Dredge Exemption Area; (a)(13), the GOM/GB Monkfish Gillnet Exemption Area; (a)(14), the GOM/GB Dogfish Gillnet Exemption Area; (a)(15), the Raised Footrope Trawl Exempted Whiting Fishery; (a)(16) the GOM Grate Raised Footrope Trawl Exempted Whiting Fishery; (a)(18), the Great South Channel Scallop Dredge Exemption Area; (b)(3), exemptions (small mesh); (b)(5), the SNE Monkfish and Skate Trawl Exemption Area; (b)(6), the SNE Monkfish and Skate Gillnet Exemption Area; (b)(8), the SNE Mussel and Sea Urchin Dredge Exemption Area; (b)(9), the SNE Little Tunny Gillnet Exemption Area; and (b)(11), the SNE Scallop Dredge Exemption Area. Each violation of any provision in § 648.80 constitutes a separate violation.

(ii) Enter or fish in the Gulf of Maine, Georges Bank, or Southern New England Regulated Mesh Areas, except as provided in § 648.80(a)(3)(vi) and (b)(2)(vi), and, for purposes of transiting, all gear (other than exempted gear) must be stowed in accordance with § 648.23(b).

(iii) *Gulf of Maine and Georges Bank Regulated Mesh Areas.* (A) Fish with, use, or have on board, within the areas described in § 648.80(a)(1) and (2), nets with mesh size smaller than the minimum mesh size specified in § 648.80(a)(3) and (4); except as provided in § 648.80(a)(5) through (8), (a)(9), (a)(10), (a)(15), (a)(16), (d), (e), and (i); unless the vessel has not been issued a NE multispecies permit and fishes for NE multispecies exclusively in state waters, or unless otherwise specified in § 648.17.

(B) Fish within the areas described in § 648.80(a)(6) with net mesh smaller than the minimum size specified in § 648.80(a)(3) or (4).

(iv) *Southern New England Regulated Mesh Area.* Fish with, use, or have available for immediate use within the area described in § 648.80(b)(1), net mesh smaller than the minimum size specified in § 648.80(b)(2), except as provided in § 648.80(b)(3), (b)(9), (d), (e), and (i), or unless the vessel has not been issued a Federal NE multispecies permit and fishes for multispecies exclusively in state waters, or unless otherwise specified in § 648.17.

(v) *Mid–Atlantic Regulated Mesh Area.* Fish with, use, or have available for immediate use within the area described in § 648.80(c)(1), nets of mesh size smaller that the minimum mesh size specified in § 648.80(c)(2); except as provided in § 648.80(c)(3), (d), (e), and (i); or unless the vessel has not been issued a Federal NE multispecies permit and fishes for NE multispecies exclusively in state waters, or unless otherwise specified in § 648.17.

(vi) *Mid–water trawl exempted fishery.* (A) Fish for, land, or possess NE multispecies harvested by means of pair trawling or with pair trawl gear, except under the provisions of § 648.80(d), or unless the vessels that engaged in pair trawling have not been issued multispecies permits and fish for NE multispecies exclusively in state waters.

(B) Fish for the species specified in § 648.80(d) or (e) with a net mesh smaller than the applicable mesh size specified in § 648.80(a)(3) or (4), (b)(2), or (c)(2), or possess or land such species, unless the vessel is in compliance with the requirements specified in § 648.80(d) or (e), or unless the vessel has not been issued a Federal NE multispecies permit and fishes for NE multispecies exclusively in state waters, or unless otherwise specified in § 648.17.

(vii) *Scallop vessels.* (A) Violate any of the possession or landing restrictions on fishing with scallop dredge gear specified in §§ 648.80(h) and 648.94.

(B) Possess, land, or fish for regulated species, except winter flounder as provided for in accordance with § 648.80(i) from or within the areas described in § 648.80(i), while in possession of scallop dredge gear on a vessel not fishing under the scallop DAS program as described in § 648.53, or fishing under a general scallop permit, unless the vessel and the dredge gear conform with the stowage requirements of § 648.23(b), or unless the vessel has not been issued a Federal NE multispecies permit and fishes for NE multispecies exclusively in state waters.

(viii) *Northern shrimp and small mesh multispecies exempted fisheries.* (A) Fish for, harvest, possess, or land in or from the EEZ northern shrimp, unless such shrimp were fished for or harvested by a vessel meeting the requirements specified in § 648.80(a)(5).

(B) Fish for, harvest, possess, or land in or from the EEZ, when fishing with trawl gear, any of the exempted species specified in § 648.80(a)(9)(i), unless such species were fished for or harvested by a vessel meeting the requirements specified in § 648.80(a)(5)(ii) or (a)(9)(ii).

(ix) *Winter flounder state exemption program.* Violate any provision of the state waters winter flounder exemption program as provided in § 648.80(i).

(6) *Gear requirements*—(i) *For all persons.* It is unlawful for any person, including any owner or operator of a vessel issued a valid NE multispecies permit or letter under § 648.4(a)(1)(i),

unless otherwise specified in § 648.17, to do any of the following:

(A) Obstruct or constrict a net as described in § 648.80(g)(1) or (2).

(B) Fish for, harvest, possess, or land any species of fish in or from the GOM/GB Inshore Restricted Roller Gear Area described in § 648.80(a)(3)(vii) with trawl gear where the diameter of any part of the trawl footrope, including discs, rollers or rockhoppers, is greater than 12 inches (30.5 cm).

(C) Fish for, land, or possess NE multispecies harvested with brush–sweep trawl gear unless the vessel has not been issued a Federal NE multispecies permit and fishes for NE multispecies exclusively in state waters.

(D) Possess brush–sweep trawl gear while in possession of NE multispecies, unless the vessel has not been issued a Federal NE multispecies permit and fishes for NE multispecies exclusively in state waters.

(E) Use, set, haul back, fish with, possess on board a vessel, unless stowed in accordance with § 648.23(b), or fail to remove, sink gillnet gear and other gillnet gear capable of catching NE multispecies, with the exception of single pelagic gillnets (as described in § 648.81(f)(2)(ii)), in the areas and for the times specified in § 648.80(g)(6)(i) and (ii), except as provided in § 648.80(g)(6)(i) and (ii), and § 648.81(f)(2)(ii), or unless otherwise authorized in writing by the Regional Administrator.

(F) Fish for, land, or possess NE multispecies harvested with the use of de–hookers (''crucifiers'') with less than 6–inch (15.2–cm) spacing between the fairlead rollers unless the vessel has not been issued a Federal NE multispecies permit and fishes for NE multispecies exclusively in state waters.

(G) Possess or use de–hookers (''crucifiers'') with less than 6–inch (15.2–cm) spacing between the fairlead rollers while in possession of NE multispecies, unless the vessel has not been issued a Federal NE multispecies permit and fishes for NE multispecies exclusively in state waters.

(ii) *For vessel and operator permit holders.* It is unlawful for any owner or operator of a vessel issued a valid NE multispecies permit or letter under § 648.4(a)(1)(i), unless otherwise specified in § 648.17, to do any of the following:

(A) *Gillnet gear.* (*1*) If the vessel has been issued a limited access NE multispecies permit and fishes under a NE multispecies DAS with gillnet gear, fail to comply with gillnet tagging requirements specified in §§ 648.80(a)(3)(iv)(B)(*4*), (a)(3)(iv)(C), (a)(4)(iv)(B)(*3*), (b)(2)(iv)(B)(*3*), and (c)(2)(v)(B)(*3*), or fail to produce immediately, or cause to be produced immediately, gillnet tags when requested by an authorized officer.

(*2*) Produce, or cause to be produced, gillnet tags under § 648.80(a)(3)(iv)(C), without the written confirmation from the Regional Administrator described in § 648.80(a)(3)(iv)(C).

(*3*) Tag a gillnet or use a gillnet tag that has been reported lost, missing, destroyed, or that was issued to another vessel.

(*4*) Sell, transfer, or give away gillnet tags that have been reported lost, missing, destroyed, or issued to another vessel.

(*5*) Enter, fail to remove sink gillnet gear or gillnet gear capable of catching NE multispecies from, or be in the areas, and for the times, described in § 648.80(g)(6)(i) and (ii), except as provided in §§ 648.80(g)(6)(i) and 648.81(i).

(B) *Hook gear.* Fail to comply with the restrictions on fishing and gear specified in § 648.80(a)(3)(v), (a)(4)(v), (b)(2)(v), and (c)(2)(iv) if the vessel has been issued a limited access NE multispecies permit and fishes with hook gear in areas specified in § 648.80(a), (b), or (c), unless allowed under § 648.85(b)(7)(iv)(F).

(7) *Closed areas and EFH*—(i) *All persons.* It is unlawful for any person, including any owner or operator of a vessel issued a valid Federal NE multispecies permit or letter under § 648.4(a)(1)(i), unless otherwise specified in § 648.17, to do any of the following:

(A) Enter, be on a fishing vessel in, or fail to remove gear from the EEZ portion of the areas described in § 648.81(d)(1) through (g)(1), except as provided in § 648.81(d)(2), (e)(2), (f)(2), (g)(2), and (i).

(B) Fish for, harvest, possess, or land regulated species in or from the closed areas specified in § 648.81(a) through (f), unless otherwise specified in § 648.81(c)(2)(iii), (f)(2)(i), (f)(2)(iii), or as authorized under § 648.85.

(C) *Restricted gear areas.* (*1*) Fish, or be in the areas described in § 648.81(j)(1), (k)(1), (l)(1), and (m)(1) on a fishing vessel with mobile gear during the time periods specified in § 648.81(j)(2), (k)(2), (l)(2), and (m)(2), except as provided in § 648.81(j)(2), (k)(2), (l)(2), and (m)(2).

(*2*) Fish, or be in the areas described in § 648.81(j)(1), (k)(1), and (l)(1) on a fishing vessel with lobster pot gear during the time periods specified in § 648.81(j)(2), (k)(2), and (l)(2).

(*3*) Deploy in or fail to remove lobster pot gear from the areas described in § 648.81(j)(1), (k)(1), and (l)(1), during the time periods specified in § 648.81(j)(2), (k)(2), and (l)(2).

(D) *GB Seasonal Closure Area.* Enter, fail to remove gear from, or be in the areas described in § 648.81(g)(1) through (i)(1) during the time period specified, except as provided in § 648.81(d), (g)(2), (h)(2), and (i)(2).

(E) *Closed Area I.* Enter or be in the area described in § 648.81(a)(1) on a fishing vessel, except as provided in § 648.81(a)(2) and (i).

(F) *Closed Area II.* Enter or be in the area described in § 648.81(b)(1) on a fishing vessel, except as provided in § 648.81(b)(2) and (i).

(G) *Nantucket Lightship Closure Area.* Enter or be in the area described in § 648.81(c)(1) on a fishing vessel, except as allowed under § 648.81(c)(2) and (i).

(ii) *Vessel and permit holders.* It is unlawful for any owner or operator of a vessel issued a valid NE multispecies permit or letter under § 648.4(a)(1)(i), unless otherwise specified in § 648.17, to do any of the following:

(A) *EFH closure area restrictions.* If fishing with bottom tending mobile gear, fish in, enter, be on a fishing vessel in, the EFH closure areas described in § 648.81(h)(1)(i) through (vi).

(8) *DAS restrictions for all persons.* It is unlawful for any person, including any owner or operator of a vessel issued a valid NE multispecies permit or letter under § 648.4(a)(1)(i), unless otherwise specified in § 648.17, to do any of the following:

(i) For vessels issued a limited access NE multispecies permit, or those issued a limited access NE multispecies permit and a limited access monkfish permit (Category C, D, F, G, or H), but not fishing under the limited access monkfish Category A or B provisions as allowed under § 648.92(b)(2), call into the DAS program prior to 1 hr before leaving port.

(ii) Call in DAS in excess of those allocated, leased, or permanently transferred, in accordance with the restrictions and conditions of § 648.82.

(9) *DAS restrictions for vessel and operator permit holders.* It is unlawful for any owner or operator of a vessel issued a valid NE multispecies permit or letter under § 648.4(a)(1)(i), unless otherwise specified in § 648.17, to do any of the following:

(i) *Differential DAS Areas.* If fishing under a NE multispecies Category A DAS in either the GOM Differential DAS Area, or the SNE Differential DAS Area defined under § 648.82(e)(2)(i), fail to declare into the area through VMS as required under § 648.82(e)(2)(ii).

(ii) *DAS Leasing Program.* (A) Provide false information on an application, required by § 648.82(k)(4)(xi), to

downgrade the DAS Leasing Program baseline.

(B) Lease NE multispecies DAS or use leased DAS that have not been approved for leasing by the Regional Administrator as specified in § 648.82(k).

(C) Provide false information on, or in connection with, an application, required under § 648.82(k)(3), to effectuate the leasing of NE multispecies DAS.

(D) Act as lessor or lessee of a NE multispecies Category B DAS, or Category C DAS.

(E) Act as lessor or lessee of NE multispecies DAS, if the lessor's or the lessee's vessels do not comply with the size restrictions specified in § 648.82(k)(4)(ix).

(F) Sub–lease NE multispecies DAS.

(G) Lease more than the maximum number of DAS allowable under § 648.82(k)(4)(iv).

(H) Lease NE multispecies DAS to a vessel that does not have a valid limited access multispecies permit.

(I) Lease NE multispecies DAS associated with a Confirmation of Permit History.

(J) Lease NE multispecies DAS if the number of unused allocated DAS is less than the number of DAS requested to be leased.

(K) Lease NE multispecies DAS in excess of the duration specified in § 648.82(k)(4)(viii).

(L) Combine, transfer, or consolidate DAS allocations, except as provided for under the DAS Leasing Program or the DAS Transfer Program, as specified under § 648.82(k) and (l), respectively.

(iii) *DAS Transfer Program.* (A) Transfer NE multispecies DAS, or use transferred DAS, that have not been approved for transfer by the Regional Administrator, as specified in § 648.82(l).

(B) Provide false information on, or in connection with, an application, required by § 648.82(l)(2), for a NE multispecies DAS transfer.

(C) Permanently transfer only a portion of a vessel's total allocation of DAS.

(D) Permanently transfer NE multispecies DAS between vessels, if such vessels do not comply with the size restrictions specified in § 648.82(l)(1)(ii).

(iv) *Gillnet fishery.* (A) Fail to declare, and be, out of the non–exempt gillnet fishery as required by § 648.82(j)(1)(ii), using the procedure specified in § 648.82(h).

(B) If a vessel has been issued a limited access NE multispecies permit and fishes under a NE multispecies DAS, fail to comply with the gillnet requirements and restrictions specified in § 648.82(j).

(C) If a vessel has been issued a limited access Day gillnet category designation, fail to comply with the restrictions and requirements specified in § 648.82(j)(1).

(D) If a vessel has been issued a limited access Trip gillnet category designation, fail to comply with the restrictions and requirements specified in § 648.82(j)(2).

(v) *Spawning blocks.* Fail to declare, and be, out of the NE multispecies DAS program as required by § 648.82(g), using the procedure described under § 648.82(h), as applicable.

(vi) *DAS notification.* (A) For purposes of DAS notification, if required, or electing, to have a VMS unit under § 648.10:

(*1*) Fail to have a certified, operational, and functioning VMS unit that meets the specifications of § 648.9 on board the vessel at all times.

(*2*) Fail to comply with the notification, replacement, or any other requirements regarding VMS usage specified in § 648.10(b).

(B) Fail to comply with any provision of the DAS notification program specified in § 648.10.

(vii) *Charter/party vessels.* Participate in the DAS program pursuant to § 648.82 when carrying passengers for hire on board a vessel during any portion of a fishing trip.

(10) *Gear marking requirement for all persons.* It is unlawful for any person, including any owner or operator of a vessel issued a valid NE multispecies permit or letter under § 648.4(a)(1)(i), unless otherwise specified in § 648.17, to fail to comply with the gear–marking requirements of § 648.84.

(11) *U.S./Canada Resource Management Area*—(i) *Possession and landing restrictions of the U.S./Canada Area*—(A) *All Persons.* (*1*) Fish for, harvest, possess or land any regulated NE multispecies from the areas specified in § 648.85(a)(1), unless in compliance with the restrictions and conditions specified in § 648.85(a)(3).

(*2*) If fishing under a NE multispecies DAS in the Western U.S./Canada Area or Eastern U.S./Canada Area specified in § 648.85(a)(1), exceed the trip limits specified in § 648.85(a)(3)(iv), unless further restricted under § 648.85(b).

(*3*) If fishing inside the Eastern U.S./Canada Area and in possession of fish in excess of what is allowed under more restrictive regulations that apply outside of the Eastern U.S./Canada Area, fish outside of the Eastern U.S./Canada Area on the same trip, as prohibited under § 648.85(a)(3)(ii)(A).

(*4*) If fishing both outside and inside of the areas specified for a SAP under § 648.85(b)(3) and (8), under a NE multispecies DAS in the Eastern U.S./Canada Area specified in § 648.85(a)(1), fail to abide by the DAS and possession restrictions under § 648.85(b)(8)(v)(A)(*2*) through (4).

(B) *Vessel and operator permit holders.* Fail to comply with the GB yellowtail flounder trip limit specified under § 648.85(a)(3)(iv)(C).

(ii) *Gear requirements for all persons.* If fishing with trawl gear under a NE multispecies DAS in the Eastern U.S./Canada Area defined in § 648.85(a)(1)(ii), fail to fish with a haddock separator trawl or a flounder trawl net, as specified in § 648.85(a)(3)(iii); unless using other gear authorized under § 648.85(b)(6) or (8).

(iii) *Notification and VMS requirements for all persons.* (A) Enter or fish in the Western U.S./Canada Area or Eastern U.S./Canada Area specified in § 648.85(a)(1), unless declared into the area in accordance with § 648.85(a)(3)(ii).

(B) If declared into one of the areas specified in § 648.85(a)(1), fish during that same trip outside of the declared area, unless in compliance with the applicable restrictions specified under § 648.85(a)(3)(ii)(A) or (B).

(C) If the vessel has been issued a limited access NE multispecies DAS permit, and is in the area specified in § 648.85(a), fail to comply with the VMS requirements in § 648.85(a)(3)(i).

(D) If fishing under a NE multispecies DAS in the Eastern U.S./Canada Area specified in § 648.85(a)(1)(ii), but not in a SAP specified in § 648.85(b) on the same trip, fail to comply with the requirements specified in § 648.85(a)(3).

(E) Fail to notify NMFS via VMS prior to departing the Eastern U.S./Canada Area, when fishing inside and outside of the area on the same trip, in accordance with § 648.85(a)(3)(ii)(A)(*1*).

(F) When fishing inside and outside of the Eastern U.S./Canada Area on the same trip, fail to abide by the most restrictive requirements that apply to any area fished, including the DAS counting, trip limits, and reporting requirements that apply, as described in § 648.85(a)(3)(ii)(A).

(iv) *Reporting requirements for all persons.* (A) If fishing under a NE multispecies DAS in the Western U.S./Canada Area or Eastern U.S./Canada Area specified in § 648.85(a)(1), fail to report landings in accordance with § 648.85(a)(3)(v).

(B) Fail to comply with the reporting requirements under § 648.85(a)(3)(ii)(A)(*2*) when fishing

inside and outside of the Eastern U.S./Canada Area on one trip.

(v) *DAS*—(A) *All Persons.* If fishing under a NE multispecies DAS in the Eastern U.S./Canada Area specified in § 648.85(a)(1)(ii), and in one of the SAPs specified in § 648.85(b)(3) or (8) on the same trip, fail to comply with the no discard and DAS flip provisions specified in § 648.85(b)(8)(v)(I) or the minimum Category A DAS requirement specified in § 648.85(b)(8)(v)(J).

(B) *Vessel and operator permit holders.* (*1*) If fishing under a NE multispecies Category A DAS in one of the Differential DAS Areas defined in § 648.82(e)(2)(i), and under the restrictions of one or more of the SAPs under § 648.85, fail to comply with the most restrictive regulations.

(*2*) For vessels fishing inside and outside the Eastern U.S./Canada Area on the same trip, fail to comply with the most restrictive regulations that apply on the trip as required by § 648.85(a)(3)(ii)(A).

(vi) *Closure of the U.S./Canada Area for all persons.* If fishing under a NE multispecies DAS, declare into, enter, or fish in the Eastern U.S./Canada Area specified in § 648.85(a)(1), if the area is closed under the authority of the Regional Administrator as described in § 648.85(a)(3)(iv)(D) or (E), unless fishing in the Closed Area II Yellowtail Flounder SAP specified in § 648.85(b)(3) or the Eastern U.S./Canada Haddock SAP Pilot Program specified in § 648.85(b)(8).

(12) *SAP restrictions*—(i) *General restrictions for all persons.* (A) If declared into the areas specified in § 648.85(b), enter or exit the declared areas more than once per trip.

(B) If a vessel is fishing under a Category B DAS in the Closed Area II Yellowtail Flounder SAP specified in § 648.85(b)(3), the Regular B DAS Program specified in § 648.85(b)(6), or the Eastern U.S./Canada Haddock SAP specified in § 648.85(b)(8), remove any fish caught with any gear, including dumping the contents of a net, except on board the vessel.

(ii) *General restrictions for vessel and operator permit holders.* Discard legal–sized NE regulated multispecies, ocean pout, or Atlantic halibut while fishing under a SAP, as described in §§ 648.85(b)(3)(xi), 648.85(b)(7)(iv)(H), or 648.85(b)(8)(v)(I).

(iii) *Closed Area II Yellowtail Flounder SAP restrictions for all persons.* (A) If fishing under the Closed Area II Yellowtail Flounder SAP, fish for, harvest, possess, or land any regulated NE multispecies from the area specified in § 648.85(b)(3)(ii), unless in compliance with § 648.85(b)(3)(i) through (xi).

(B) Enter or fish in Closed Area II as specified in § 648.81(b), unless declared into the area in accordance with § 648.85(b)(3)(v).

(C) Enter or fish in Closed Area II under the Closed Area II Yellowtail Flounder SAP outside of the season specified in § 648.85(b)(3)(iii).

(D) If fishing in the Closed Area II Yellowtail Flounder SAP specified in § 648.85(b)(3), exceed the number of trips specified under § 648.85(b)(3)(vi) or (vii).

(E) If fishing in the Closed Area II Yellowtail Flounder SAP specified in § 648.85(b)(3), exceed the trip limits specified in § 648.85(b)(3)(viii).

(iv) *Southern New England/Mid–Atlantic Winter Flounder SAP restrictions for all persons.* If fishing under the SNE/MA Winter Flounder SAP described in § 648.85(b)(4), fail to comply with § 648.85(b)(4)(i) through (iv).

(v) *Regular B DAS Program restrictions for vessel and operator permit holders.* (A) If fishing in the Regular B DAS Program specified in § 648.85(b)(6), fail to comply with §§ 648.85(b)(6)(iv)(A) through (F), (I), and (J).

(B) If fishing in the Regular B DAS Program specified in § 648.85(b)(6), fail to use a haddock separator trawl as described in § 648.85(a)(3)(iii)(A), or other approved gear as described in § 648.85(b)(6)(iv)(J).

(C) If possessing a Ruhle Trawl, either at sea or elsewhere, as allowed under § 648.85(b)(6)(iv)(J)(*1*) or (b)(8)(v)(E)(*1*), fail to comply with the net specifications under § 648.85(b)(6)(iv)(J)(*J*).

(D) Discard legal–sized NE regulated multispecies, ocean pout, Atlantic halibut, or monkfish while fishing under a Regular B DAS in the Regular B DAS Program, as described in § 648.85(b)(6)(iv)(E).

(E) If fishing in the Regular B DAS Program specified in § 648.85(b)(6), fail to comply with the landing limits specified in § 648.85(b)(6)(iv)(D).

(F) If fishing under a Regular B DAS in the Regular B DAS Program, fail to comply with the DAS flip requirements of § 648.85(b)(6)(iv)(E) if the vessel harvests and brings on board more than the landing limit for a groundfish stock of concern specified in § 648.85(b)(6)(iv)(D), other groundfish specified under § 648.86, or monkfish under § 648.94.

(G) *DAS usage restrictions.* (*1*) If fishing in the Regular B DAS Program, fail to comply with the restriction on DAS use specified in § 648.82(d)(2)(i)(A).

(*2*) If fishing in the Regular B DAS Program specified in § 648.85(b)(6), fail to comply with the minimum Category A DAS and Category B DAS accrual requirements specified in § 648.85(b)(6)(iv)(F).

(*3*) Use a Regular B DAS in the Regular B DAS Program specified in § 648.85(b)(6), if the program has been closed as specified in § 648.85(b)(6)(iv)(G) or (H), or (b)(6)(vi).

(H) VMS requirements. (*1*) If fishing in the Regular B DAS Program specified in § 648.85(b)(6), fail to comply with the VMS requirement specified in § 648.85(b)(6)(iv)(A).

(*2*) If fishing in the Regular B DAS Program specified in § 648.85(b)(6), fail to comply with the VMS declaration requirement specified in § 648.85(b)(6)(iv)(C).

(I) If fishing in the Regular B DAS Program specified in § 648.85(b)(6), fail to comply with the observer notification requirement specified in § 648.85(b)(6)(iv)(B).

(J) If fishing in the Regular B DAS Program specified in § 648.85(b)(6), fail to comply with the reporting requirements specified in § 648.85(b)(6)(iv)(I).

(vi) *Closed Area I Hook Gear Haddock SAP restrictions for vessel and operator permit holders.* (A) If fishing in the Closed Area I Hook Gear Haddock SAP specified in § 648.85(b)(7), fail to comply with the applicable requirements and conditions specified in § 648.85(b)(7)(iv), and (b)(7)(v) or (b)(7)(vi).

(B) Fish in the Closed Area I Hook Gear Haddock SAP specified in § 648.85(b)(7) outside of the season specified in § 648.85(b)(7)(iii).

(C) Fish in the Closed Area I Hook Gear Haddock Access Area specified in § 648.85(b)(7)(ii), if that area is closed as specified in § 648.85(b)(7)(iv)(I) or (b)(7)(vi)(F).

(D) If fishing in the Closed Area I Hook Gear Haddock SAP specified in § 648.85(b)(7), fail to comply with the applicable DAS use restrictions specified in § 648.85(b)(7)(iv)(A), and (b)(7)(v)(A) or (b)(7)(vi)(A).

(E) *VMS requirements.* (*1*) If fishing in the Closed Area I Hook Gear Haddock SAP specified in § 648.85(b)(7), fail to comply with the VMS requirements specified in § 648.85(b)(7)(iv)(B).

(*2*) If fishing in the Closed Area I Hook Gear Haddock SAP specified in § 648.85(b)(7), fail to comply with the VMS declaration requirement specified in § 648.85(b)(7)(iv)(D).

(F) If fishing in the Closed Area I Hook Gear Haddock SAP specified in

§ 648.85(b)(7), fail to comply with the observer notification requirements specified in § 648.85(b)(7)(iv)(C).

(G) If fishing in the Closed Area I Hook Gear Haddock SAP specified in § 648.85(b)(7), fail to comply with the applicable gear restrictions specified in § 648.85(b)(7)(iv)(E), and (b)(7)(v)(B) or (b)(7)(vi)(B).

(H) If fishing in the Closed Area I Hook Gear Haddock SAP specified in § 648.85(b)(7), fail to comply with the applicable landing limits specified in § 648.85(b)(7)(iv)(H), and (b)(7)(v)(C) or (b)(7)(vi)(C).

(I) If fishing in the Closed Area I Hook Gear Haddock SAP specified in § 648.85(b)(7), fail to comply with the applicable reporting requirement specified in § 648.85(b)(7)(v)(D) or (b)(7)(vi)(D).

(vii) *Eastern U.S./Canada Haddock SAP Restrictions*—(A) *All Persons.* (*1*) If fishing under a NE multispecies DAS in the Eastern U.S./Canada Haddock SAP specified in § 648.85(b)(8), in the area specified in § 648.85(b)(8)(ii), and during the season specified in § 648.85(b)(8)(iv), fail to comply with § 648.85(b)(8)(v).

(*2*) *VMS and declaration requirements.* (*i*) If the vessel has been issued a limited access NE multispecies DAS permit and is in the area specified in § 648.85(b)(8)(ii), fail to comply with the VMS requirements in § 648.85(b)(8)(v)(B).

(*ii*) If fishing under a NE multispecies DAS, fish in the Eastern U.S./Canada Haddock SAP Program specified in § 648.85(b)(8), unless declared into the program in accordance with § 648.85(b)(8)(v)(D).

(*3*) Enter or fish in the Eastern U.S./Canada Haddock SAP outside of the season specified in § 648.85(b)(8)(iv).

(*4*) If possessing a Ruhle Trawl, either at sea or elsewhere, as allowed under § 648.85(b)(6)(iv)(J)(*1*) or (b)(8)(v)(E)(*1*), fail to comply with the net specifications under § 648.85(b)(6)(iv)(J)(*3*).

(*5*) *Possession limits and restrictions.* (*i*) If fishing under a NE multispecies DAS in the Eastern U.S./Canada Haddock SAP, exceed the possession limits specified in § 648.85(b)(8)(v)(F).

(*ii*) If fishing under the Eastern U.S./Canada Haddock SAP, fish for, harvest, possess, or land any regulated NE multispecies from the area specified in § 648.85(b)(8)(ii), unless in compliance with the restrictions and conditions of § 648.85(b)(8)(v)(A) through (I).

(*6*) If fishing in the Eastern U.S./Canada Haddock SAP specified in § 648.85(b)(8), fail to comply with the reporting requirements of § 648.85(b)(8)(v)(G).

(*7*) If fishing under the Eastern U.S./Canada Haddock SAP specified in § 648.85(b)(8), fail to comply with the observer notification requirements of § 648.85(b)(8)(v)(C).

(B) *Vessel and operator permit holders.* (*1*) If fishing in the Eastern U.S./Canada Haddock SAP Area, and other portions of the Eastern U.S./Canada Haddock SAP Area on the same trip, fail to comply with the restrictions in § 648.85(b)(8)(v)(A).

(*2*) *DAS usage restrictions.* (*i*) If fishing in the Eastern U.S./Canada Haddock SAP Area under a Category B DAS, fail to comply with the DAS flip requirements of § 648.85(b)(8)(v)(I), if the vessel possesses more than the applicable landing limit specified in §§ 648.85(b)(8)(v)(F) or 648.86.

(*ii*) If fishing in the Eastern U.S./Canada Haddock SAP Area under a Category B DAS, fail to have the minimum number of Category A DAS available as required by § 648.85(b)(8)(v)(J).

(*3*) Fish in the Eastern U.S./Canada Haddock SAP specified in § 648.85(b)(8), if the SAP is closed as specified in § 648.85(b)(8)(v)(K) or (L).

(13) *Possession and landing restrictions*—(i) *All persons.* (A) Under § 648.85 or § 648.86, fail to offload regulated species subject to a landing limit based on a DAS fished at the end of a fishing trip, as required by § 648.86(i).

(B) *Scallop vessels.* Possess or land fish caught with nets of mesh smaller than the minimum size specified in § 648.51, or with scallop dredge gear on a vessel not fishing under the scallop DAS program described in § 648.54, or fishing under a general scallop permit, unless said fish are caught, possessed, or landed in accordance with §§ 648.80 and 648.86, or unless the vessel has not been issued a Federal NE multispecies permit and fishes for NE multispecies exclusively in state waters.

(ii) *Vessel and operator permit holders.* (A) Land, or possess on board a vessel, more than the possession or landing limits specified in § 648.86(a), (b), (c), (d), (g), and (h); or violate any of the other provisions of § 648.86, unless otherwise specified in § 648.17.

(B) Possess or land per trip more than the possession or landing limits specified under § 648.86(a), (e), (g), (h), and (j), and under § 648.82(b)(5) or (6), if the vessel has been issued a limited access NE multispecies permit or open access NE multispecies permit, as applicable.

(C) Fish for, possess at any time during a trip, or land per trip more than the possession limit of NE multispecies specified in § 648.86(d) after using up the vessel's annual DAS allocation or when not participating in the DAS program pursuant to § 648.82, unless otherwise exempted by §§ 648.82(b)(5) or 648.89.

(D) *Atlantic cod.* (*1*) Enter port, while on a NE multispecies DAS trip, in possession of more than the allowable limit of cod specified in § 648.86(b)(1), unless the vessel is fishing under the cod exemption specified in § 648.86(b)(4).

(*2*) Enter port, while on a NE multispecies DAS trip, in possession of more than the allowable limit of cod specified in § 648.86(b)(2).

(*3*) *Cod running clock.* (*i*) For vessels fishing in the NE multispecies DAS program under the provisions of the call–in system, described in § 648.10(c), fail to remain in port for the appropriate time specified in § 648.86(b)(1)(ii)(A) and (b)(2)(ii)(A), except for transiting purposes, provided the vessel complies with § 648.86(b)(3).

(*ii*) For vessels fishing in the NE multispecies DAS program under the provisions of VMS, described in § 648.10(b), fail to declare through VMS that insufficient DAS have elapsed in order to account for the amount of cod on board the vessel as required under § 648.86(b)(2)(ii)(B).

(*4*) Fail to declare through VMS an intent to be exempt from the GOM cod trip limit under § 648.86(b)(1), as required under § 648.86(b)(4), or fish north of the exemption line if in possession of more than the GOM cod trip limit specified under § 648.86(b)(1).

(E) *Atlantic halibut.* Possess or land per trip more than the possession or landing limit specified under § 648.86(c).

(F) *White hake.* Possess or land more white hake than allowed under § 648.86(e).

(G) *Yellowtail flounder.* While fishing in the areas specified in § 648.86(g)(1) with a NE multispecies Handgear A permit, or under the NE multispecies DAS program, or under the limited access monkfish Category C or D permit provisions, possess yellowtail flounder in excess of the limits specified under § 648.86(g)(1), unless fishing under the recreational or charter/party regulations, or transiting in accordance with § 648.23(b).

(H) *GB winter flounder.* Possess or land more GB winter flounder than allowed under § 648.86(j).

(14) *Sector requirements for all persons*—(i) *General requirements.* (A) If fishing under an approved sector, as authorized under § 648.87, fail to abide by the restrictions specified in § 648.87(b)(1).

(B) If fishing under an approved sector, as authorized under § 648.87, fail to remain in the sector for the remainder of the fishing year as required by § 648.87(b)(1).

(C) If fishing under an approved sector, as authorized under § 648.87, fish in the NE multispecies DAS program in a given fishing year or, if fishing under a NE multispecies DAS, fish in an approved sector in a given fishing year, unless otherwise provided under § 648.87(b)(1)(xii).

(D) If a vessel has agreed to participate in a sector, fail to remain in the sector for the entire fishing year, as required under § 648.87(b)(1)(xi).

(E) If a vessel is removed from a sector for violating the sector rules, fish under the NE multispecies regulations for non-sector vessels.

(ii) *GB Cod Hook Sector.* If fishing under the GB Cod Hook Sector specified under § 648.87(d)(1), fish with gear other than jigs, demersal longline, or handgear.

(iii) *GB Fixed Gear Sector.* If fishing under the GB Fixed Gear Sector specified under § 648.87(d)(2), fish with gear other than jigs, non–automated demersal longline, handgear, or sink gillnets.

(15) *Open access permit restrictions*—(i) *All persons.* (A) Violate any provision of the open access permit restrictions of § 648.88.

(B) Possess on board gear other than that specified in § 648.88(a)(2)(i), or fish with hooks greater than the number specified in § 648.88(a)(2)(iii), if fishing under an open access Handgear permit.

(C) Fish for, possess, or land regulated multispecies from March 1 to March 20, if issued an open access Handgear permit.

(ii) *Vessel and operator permit holders*—(A) *Open access Handgear permit.* It is unlawful for any person owning or operating a vessel issued an open access NE multispecies Handgear permit to do any of the following, unless otherwise specified in § 648.17:

(*1*) Violate any provision of the open access Handgear permit restrictions of § 648.88(a).

(*2*) Possess, at any time during a trip, or land per trip, more than the possession limit of NE multispecies specified in § 648.88(a), unless the vessel is a charter or party vessel fishing under the charter/party restrictions specified in § 648.89.

(*3*) Use, or possess on board, gear capable of harvesting NE multispecies, other than rod and reel, or handline gear, or tub–trawls, while in possession of, or fishing for, NE multispecies.

(*4*) Possess or land NE multispecies during the time period specified in § 648.88(a)(2).

(B) *Scallop multispecies possession limit permit.* It is unlawful for any person owning or operating a vessel issued a scallop multispecies possession limit permit to possess or land more than the possession limit of NE multispecies specified in § 648.88(c), or to possess or land regulated species when not fishing under a scallop DAS, unless otherwise specified in § 648.17.

(C) *Open access NE multispecies (Non–regulated species permit).* It is unlawful for any owner or operator of a vessel issued a valid open access NE multispecies permit to possess or land any regulated species as defined in § 648.2, or to violate any applicable provisions of § 648.88, unless otherwise specified in § 648.17.

(16) *Recreational and charter/party requirements.* It is unlawful for the owner or operator of a charter or party boat issued a valid Federal NE multispecies permit, or for a recreational vessel, as applicable, unless otherwise specified in § 648.17, to do any of the following:

(i) *Possession and landing.* Possess cod, haddock, or Atlantic halibut in excess of the possession limits specified in § 648.89(c).

(ii) *Gear requirements.* Fish with gear in violation of the restrictions of § 648.89(a).

(iii) *Seasonal and area restrictions.* (A) If fishing under the recreational or charter/party regulations, fish for or possess cod caught in the GOM Regulated Mesh Area during the seasonal GOM cod possession prohibition under § 648.89(c)(1)(v) or (c)(2)(v), or fail to abide by the appropriate restrictions if transiting with cod on board.

(B) If the vessel has been issued a charter/party permit or is fishing under charter/party regulations, fail to comply with the requirements specified in § 648.81(f)(2)(iii) when fishing in the areas described in § 648.81(d)(1) through (f)(1) during the time periods specified.

(C) If the vessel is a private recreational fishing vessel, fail to comply with the seasonal GOM cod possession prohibition described in § 648.89(c)(1)(v), or, if the vessel has been issued a charter/party permit or is fishing under charter/party regulations, fail to comply with the prohibition on fishing under § 648.89(c)(2)(v).

(iv) *Restriction on sale and transfer.* Sell, trade, barter, or otherwise transfer; or attempt to sell, trade, barter or otherwise transfer; NE multispecies for a commercial purpose as specified in § 648.89(d).

(17) *Presumptions.* For purposes of this part, the following presumptions apply:

(i) Regulated species possessed for sale that do not meet the minimum sizes specified in § 648.83 are deemed to have been taken or imported in violation of these regulations, unless the preponderance of all submitted evidence demonstrates that such fish were harvested by a vessel not issued a permit under this part and fishing exclusively within state waters, or by a vessel that fished exclusively in the NAFO Regulatory Area. This presumption does not apply to fish being sorted on deck.

(ii) Regulated species possessed for sale that do not meet the minimum sizes specified in § 648.83 are deemed taken from the EEZ or imported in violation of these regulations, unless the preponderance of all submitted evidence demonstrates that such fish were harvested by a vessel not issued a permit under this part and fishing exclusively within state waters, or by a vessel that fished exclusively in the NAFO Regulatory Area. This presumption does not apply to fish being sorted on deck.

(l) *Small–mesh multispecies.* (1) It is unlawful for any person owning or operating a vessel issued a valid Federal multispecies permit to land, offload, or otherwise transfer; or attempt to land, offload, or otherwise transfer; small–mesh multispecies from one vessel to another in excess of the limits specified in § 648.13.

(2) *Presumptions.* For purposes of this part, the following presumption applies: All small–mesh multispecies retained or possessed on a vessel issued any permit under § 648.4 are deemed to have been harvested from the EEZ.

(m) *Monkfish.* It is unlawful for any person owning or operating a vessel that engages in fishing for monkfish to do any of the following, unless otherwise fishing in accordance with, and exempted under, the provisions of § 648.17:

(1) *Permit requirement.* (i) Fish for, possess, retain, or land monkfish, unless:

(A) The monkfish are being fished for, or were harvested, in or from the EEZ by a vessel issued a valid monkfish permit under § 648.4(a)(9).

(B) The vessel does not hold a valid Federal monkfish permit and fishes for or possesses monkfish exclusively in state waters.

(C) The vessel does not hold a valid Federal monkfish permit and engages in recreational fishing.

(D) The monkfish were harvested from the NAFO Regulatory Area in accordance with the provisions specified under § 648.17.

(ii) Fish for, possess, or land monkfish in or from the EEZ without having been issued and possessing a valid operator permit pursuant to § 648.5, and this permit is onboard the vessel.

(3) *Gear requirements.* (i) Fish with or use nets with mesh size smaller than the minimum mesh size specified in § 648.91(c) while fishing under a monkfish DAS.

(ii) Fail to immediately produce gillnet tags when requested by an authorized officer.

(iii) Tag a gillnet with, or otherwise use or possess, a gillnet tag that has been reported lost, missing, destroyed, or issued to another vessel, or use or possess a false gillnet tag.

(iv) Sell, transfer, or give away gillnet tags.

(v) If the vessel has been issued a valid limited access monkfish permit, and fishes under a monkfish DAS, fail to comply with gillnet requirements and restrictions specified in § 648.92(b)(8).

(4) *Area restrictions.* (i) Fail to comply with the restrictions applicable to limited access Category G and H vessels specified under § 648.92(b)(9).

(ii) Fail to comply with the NFMA requirements specified at § 648.94(f).

(5) *DAS requirements.* (i) Fail to comply with the monkfish DAS provisions specified at § 648.92 when issued a valid limited access monkfish permit.

(ii) Combine, transfer, or consolidate monkfish DAS allocations.

(6) *Size limits.* Fail to comply with the monkfish size limit restrictions of § 648.93 when issued a valid monkfish permit under § 648.4(a)(9) or when fishing in the EEZ.

(7) *Possession and landing.* (i) Fail to comply with the monkfish possession limits and landing restrictions, including liver landing restrictions, specified under § 648.94.

(ii) Violate any provision of the monkfish incidental catch permit restrictions as specified in §§ 648.4(a)(9)(ii) or 648.94(c).

(8) *Transfer and sale.* (i) Sell, barter, trade, or otherwise transfer for a commercial purpose; or attempt to sell, barter, trade, or otherwise transfer for a commercial purpose; any monkfish from a vessel without having been issued a valid monkfish vessel permit, unless the vessel fishes for monkfish exclusively in state waters, or exclusively in the NAFO Regulatory Area in accordance with the provisions specified under § 648.17.

(ii) Purchase, possess, or receive as a dealer, or in the capacity of a dealer, monkfish in excess of the possession or trip limits specified in § 648.94.

(iii) Land, offload, or otherwise transfer; or attempt to land, offload, or otherwise transfer; monkfish from one vessel to another vessel, unless each vessel has not been issued a monkfish permit and fishes exclusively in state waters.

(9) *Presumption.* For purposes of this part, the following presumption applies: All monkfish retained or possessed on a vessel issued any permit under § 648.4 are deemed to have been harvested from the EEZ, unless the preponderance of evidence demonstrates that such fish were harvested by a vessel that fished exclusively in the NAFO Regulatory Area, as authorized under § 648.17.

(n) *Summer flounder*—(1) *All persons.* Unless participating in a research activity as described in § 648.21(g), it is unlawful for any person to do any of the following:

(i) *Permit requirement.* Possess summer flounder in or harvested from the EEZ, either in excess of the possession limit specified in § 648.105, or before or after the time period specified in § 648.102, unless the vessel was issued a summer flounder moratorium permit and the moratorium permit is on board the vessel and has not been surrendered, revoked, or suspended.

(ii) *Transfer and purchase.* (A) Purchase or otherwise receive for a commercial purpose, other than solely for transport on land, summer flounder from the owner or operator of a vessel issued a summer flounder moratorium permit, unless in possession of a valid summer flounder dealer permit.

(B) Purchase or otherwise receive for commercial purposes summer flounder caught by a vessel subject to the possession limit of § 648.105.

(C) Purchase or otherwise receive for a commercial purpose summer flounder landed in a state after the effective date published in the **Federal Register** notifying permit holders that commercial quota is no longer available in that state for the respective fishing year.

(iii) *Gear requirements.* Possess nets or netting with mesh not meeting the minimum mesh requirement of § 648.104 if the person possesses summer flounder harvested in or from the EEZ in excess of the threshold limit of § 648.105(a).

(2) *Vessel and operator permit holders.* Unless participating in a research activity as described in § 648.100(f), it is unlawful for any person owning or operating a vessel issued a summer flounder permit (including a moratorium permit) to do any of the following:

(i) *Possession and landing.* (A) Possess 100 lb (45.4 kg) or more of summer flounder between May 1 and October 31, or 200 lb (90.7 kg) or more of summer flounder between November 1 and April 30, unless the vessel meets the gear requirements or restrictions specified in § 648.104.

(B) Possess summer flounder in other than a container specified in § 648.105(d) if fishing with nets having mesh that does not meet the minimum mesh–size requirement specified in § 648.104(a), unless the vessel is fishing pursuant to the exemptions specified in § 648.104(b).

(C) Land summer flounder for sale in a state after the effective date of a notification in the **Federal Register** notifying permit holders that commercial quota is no longer available in that state.

(D) Sell or transfer to another person for a commercial purpose, other than solely for transport on land, any summer flounder, possessed or landed by a vessel not issued a summer flounder moratorium permit.

(ii) *Transfer and purchase.* Sell or transfer to another person for a commercial purpose, other than solely for transport on land, any summer flounder, unless the transferee has a valid summer flounder dealer permit.

(iii) *Gear requirements.* (A) Fish with or possess nets or netting that do not meet the minimum mesh requirement, or that are modified, obstructed or constricted, if subject to the minimum mesh requirement specified in § 648.104, unless the nets or netting are stowed in accordance with § 648.104(e).

(B) Fish with or possess nets or netting that do not meet the minimum mesh requirement, or that are modified, obstructed or constricted, if fishing with an exempted net described in § 648.104, unless the nets or netting are stowed in accordance with § 648.104(f).

(C) Fish west or south, as appropriate, of the line specified in § 648.104(b)(1) if exempted from the minimum mesh requirement specified in § 648.104 by a summer flounder exemption permit.

(3) *Charter/party restrictions.* Unless participating in a research activity as described in § 648.100(f), it is unlawful for the owner and operator of a party or charter boat issued a summer flounder permit (including a moratorium permit), when the boat is carrying passengers for hire or carrying more than three crew members if a charter boat or more than five members if a party boat, to:

(i) Carry passengers for hire, or carry more than three crew members for a charter boat or five crew members for a

party boat, while fishing commercially pursuant to a summer flounder moratorium permit.

(ii) Possess summer flounder in excess of the possession limit established pursuant to § 648.105.

(iii) Fish for summer flounder other than during a season specified pursuant to § 648.102.

(iv) Sell or transfer summer flounder to another person for a commercial purpose.

(4) *Presumption.* For purposes of this part, the following presumption applies: All summer flounder retained or possessed on a vessel issued a permit under § 648.4 are deemed to have been harvested in the EEZ.

(o) *Scup*—(1) *All persons.* Unless participating in a research activity as described in § 648.120(e), it is unlawful for any person to do any of the following:

(i) *Permit requirement.* Fish for, catch, or retain for sale, barter, or trade scup in or from the EEZ north of 35°15.3′ N. lat. on board a party or charter boat without the vessel having been issued an applicable valid party or charter boat permit pursuant to § 648.4(a)(6), unless the vessel other than a party or charter vessel observes the possession limit restrictions and prohibition against sales specified in § 648.125.

(ii) *Possession and landing.* (A) Possess scup in or harvested from the EEZ north of 35°15.3′ N. lat. in an area closed, or before or after a season established pursuant to § 648.122(g).

(B) Possess scup in excess of the possession limit established pursuant to § 648.125.

(C) Fish for, possess, or land scup harvested in or from the EEZ north of 35°15.3′ N. lat. for a commercial purpose after the effective date of a notification published in the **Federal Register** stating that the commercial quota has been harvested.

(D) Fish for, catch, possess, or retain scup in or from the EEZ north of 35°15.3′ N. lat. in excess of the amount specified in § 648.123, unless the vessel complies with all of the gear restrictions in § 648.123.

(E) Fish for, catch, retain, or land scup in or from the EEZ north of 35°15.3′ N. lat. in excess of the limit established through the annual specification process and published in the **Federal Register** pursuant to § 648.120(b)(3), (4), and (7).

(iii) *Minimum fish size.* Possess, other than solely for transport on land, scup harvested in or from the EEZ north of 35°15.3′ N. lat. that do not meet the minimum fish size specified in § 648.124.

(iv) *Transfer and purchase.* Purchase or otherwise receive for a commercial purpose scup harvested from the EEZ north of 35°15.3′ N. lat., or from a vessel issued a scup moratorium permit after the effective date of a notification published in the **Federal Register** stating that the commercial quota has been harvested.

(v) *Gear requirements.* Fail to comply with any of the gear restrictions specified in § 648.123.

(vi) Gear restricted areas. Fish for, catch, possess, retain, or land *Loligo* squid, silver hake, or black sea bass in or from the areas and during the time periods described in § 648.122(a) or (b) while in possession of any trawl nets or netting that do not meet the minimum mesh restrictions or that are obstructed or constricted as specified in §§ 648.122 and 648.123(a), unless the nets or netting are stowed in accordance with § 648.123(b).

(2) *Vessel and operator permit holders.* Unless participating in a research activity as described in § 648.120(e), it is unlawful for any person owning or operating a vessel issued a scup permit (including a moratorium permit) to do any of the following:

(i) *Possession and landing.* (A) Possess scup in excess of the threshold amount specified in § 648.123, unless the vessel meets the minimum mesh–size restrictions specified in § 648.123.

(B) Land scup for sale after the effective date of a notification published in the **Federal Register** stating that the commercial quota has been harvested.

(C) Possess scup in, or harvested from, the EEZ in an area closed by, or before or after a season established pursuant to § 648.122.

(ii) *Transfer and purchase.* (A) Sell or transfer to another person for a commercial purpose, other than solely for transport on land, any scup, unless the transferee has a dealer permit issued under § 648.6.

(B) Transfer scup at sea, or attempt to transfer at sea to any vessel, any scup taken from the EEZ, unless in compliance with the provisions of § 648.13(i).

(3) *Charter/party requirements.* Unless participating in a research activity as described in § 648.120(e), it is unlawful for the owner or operator of a party or charter boat issued a scup permit (including a moratorium permit), when the boat is carrying passengers for hire, or when carrying more than three crew members, if a charter boat, or more than five members, if a party boat to:

(i) Carry passengers for hire, or carry more than three crew members for a charter boat, or five crew members for a party boat, while fishing for scup under the terms of a moratorium permit issued pursuant to § 648.4(a)(6).

(ii) Possess scup in excess of the possession limit established pursuant to § 648.125.

(iii) Fish for scup other than during a season established pursuant to § 648.122.

(iv) Sell scup or transfer scup to another person for a commercial purpose other than solely for transport on land.

(v) Possess scup that do not meet the minimum fish size specified in § 648.124(b).

(4) *Presumption.* For purposes of this part, the following presumption applies: All scup retained or possessed on a vessel issued a permit under § 648.4 are deemed to have been harvested in the EEZ, north of 35°15.3′ N. lat., unless a preponderance of the evidence shows the fish were harvested by a vessel that fished exclusively in state waters.

(p) *Black sea bass*—(1) *All persons.* Unless participating in a research activity as described in § 648.140(e), it is unlawful for any person to do any of the following:

(i) *Permit requirement.* Possess black sea bass in or harvested from the EEZ north of 35°15.3′ N. lat., either in excess of the possession limit established pursuant to § 648.145, or before or after the time period established pursuant to § 648.142, unless the person is operating a vessel issued a moratorium permit under § 648.4 and the moratorium permit is on board the vessel.

(ii) *Possession and landing.* Fish for, catch, possess, land, or retain black sea bass in or from the EEZ north of 35°15.3 N. lat. (the latitude of Cape Hatteras Light, NC, to the U.S.–Canadian border) in excess of the amount specified in § 648.144(a)(1)(i), unless the vessel complies with all of the gear restrictions at § 648.144(a).

(iii) *Transfer and purchase.* Purchase or otherwise receive for commercial purposes, other than solely for transport on land, black sea bass landed for sale by a moratorium vessel in any state, or part thereof, north of 35°15.3′ N. lat., after the effective date of a notification published in the **Federal Register** stating that the commercial annual quota has been harvested and the EEZ is closed to the harvest of black sea bass.

(iv) *Gear restriction.* Fail to comply with any of the gear restrictions specified in § 648.144.

(v) *Minimum fish size.* Fish for, possess, land, or retain black sea bass in or from the EEZ that does not comply with the minimum fish size specified in § 648.143.

(2) *Vessel and operator permit holders.* Unless participating in a

research activity as described in § 648.140(e), it is unlawful for any person owning or operating a vessel issued a black sea bass permit (including a moratorium permit) to do any of the following:

(i) *Permit requirement.* Sell or transfer to another person for a commercial purpose, other than solely for transport on land, any black sea bass from a vessel, unless the transferee has a valid black sea bass dealer permit.

(ii) *Possession and landing.* (A) Land black sea bass for sale in any state, or part thereof, north of 35°15.3′ N. lat. after the effective date of a notification published in the **Federal Register** stating that the commercial annual quota has been harvested and the EEZ is closed to the harvest of black sea bass.

(B) Possess, retain, or land black sea bass harvested in or from the EEZ in excess of the commercial possession limit established at § 648.140.

(C) Land black sea bass for sale in any state south of North Carolina.

(D) Possess black sea bass after the effective date of a notification published in the **Federal Register** stating that the commercial annual quota has been harvested and the EEZ is closed to the harvest of black sea bass, unless the vessel has been issued a Southeast Region Snapper/Grouper Permit and fishes for and possess black sea bass south of 35°15.3′ N. lat.

(3) *Charter/party restrictions.* Unless participating in a research activity as described in § 648.140(e), it is unlawful for the owner or operator of a party or charter boat issued a black sea bass permit (including a moratorium permit), when the boat is carrying passengers for hire or carrying more than three crew members, if a charter boat, or more than five members, if a party boat, to:

(i) Fish for black sea bass under the terms of a moratorium permit issued pursuant to § 648.4(a)(7).

(ii) Possess, retain, or land black sea bass in excess of the possession limit established pursuant to § 648.145.

(iii) Fish for black sea bass other than during a time allowed pursuant to § 648.142.

(iv) Sell black sea bass or transfer black sea bass from a vessel to another person for a commercial purpose other than solely for transport on land.

(4) *Presumption.* For purposes of this part, the following presumption applies: All black sea bass retained or possessed on a vessel issued a permit under § 648.4 are deemed to have been harvested in the EEZ, unless the vessel also has been issued a Southeast Region Snapper/Grouper permit and fishes for, retains, or possesses black sea bass south of 35°15.3′ N. lat.

(q) *Bluefish.* Unless participating in a research activity as described in § 648.160(h), it is unlawful for any person to do any of the following:

(1) *Permit requirement.* Possess in or harvest from the EEZ, Atlantic bluefish, in excess of the daily possession limit found at § 648.164, unless the vessel is issued a valid Atlantic bluefish vessel permit under § 648.4(a)(8)(i) and the permit is on board the vessel and has not been surrendered, revoked, or suspended.

(2) *Possession and landing.* (i) Land bluefish for sale in a state after the effective date of a notification in the **Federal Register** pursuant to § 648.161(b), that the commercial quota is no longer available in that state.

(ii) Land bluefish for sale after the effective date of a notification in the **Federal Register** pursuant to § 648.161(a), that the bluefish fishery is closed.

(3) *Transfer and purchase.* (i) Sell, barter, trade or transfer; or attempt to sell, barter, trade or otherwise transfer; other than for transport, bluefish that were harvested in or from the EEZ, unless the vessel has been issued a valid bluefish permit under § 648.4(a)(8)(i).

(ii) Purchase or otherwise receive for a commercial purpose bluefish harvested from the EEZ after the effective date of the notification published in the **Federal Register** stating that the commercial quota has been harvested.

(iii) Purchase or otherwise receive for a commercial purpose bluefish harvested by a federally permitted vessel after the effective date of the notification published in the **Federal Register** stating that the commercial quota has been harvested.

(4) *Charter/party restrictions.* Carry passengers for hire, or carry more than three crew members for a charter boat or five crew members for a party boat, while fishing commercially pursuant to a bluefish permit issued under § 648.4(a)(8).

(5) *Presumption.* For purposes of this part, the following presumption applies: All bluefish possessed on board a party or charter vessel issued a permit under § 648.4(a)(8)(ii) are deemed to have been harvested from the EEZ.

(r) *Atlantic herring*—(1) *All persons.* It is unlawful for any person to do any of the following:

(i) *Permit requirement.* Operate, or act as an operator of, a vessel with an Atlantic herring permit, or a vessel fishing for or possessing herring in or from the EEZ, unless the operator has been issued, and is in possession of, a valid operator permit.

(ii) *Possession and landing.* (A) Fish for, possess, retain or land herring, unless:

(*1*) The herring are being fished for, or were harvested in or from, the EEZ by a vessel holding a valid herring permit under this part and the operator on board such vessel possesses a valid operator permit that is on board the vessel.

(*2*) The herring were harvested by a vessel not issued a herring permit that fished exclusively in state waters.

(*3*) The herring were harvested in or from the EEZ by a vessel engaged in recreational fishing.

(*4*) The herring were possessed for personal use as bait.

(*5*) Unless otherwise specified in § 648.17.

(B) Possess, transfer, receive, or sell; or attempt to transfer, receive, or sell; more than 2,000 lb (907.2 kg) of herring per trip; or land, or attempt to land more than 2,000 lb (907.2 kg) of herring per day in or from a management area closed pursuant to § 648.201(a), if the vessel has been issued and holds a valid herring permit.

(C) Possess or land more herring than is allowed by the vessel's Atlantic herring permit.

(iii) *Processing requirements.* (A) Process herring that was caught in or from the EEZ by a U.S. vessel that exceeds the size limits specified in § 648.4(a)(10)(iii), in excess of the specification of USAP.

(B) Discard herring carcasses at sea after removing the roe, if a federally permitted vessel; or in the EEZ, if not a federally permitted vessel.

(C) Catch, take, or harvest herring for roe, at sea, if a federally permitted vessel; or if not federally permitted, in or from the EEZ in excess of any limit established by § 648.206(b)(24).

(iv) *Transfer and purchase.* (A) Purchase, possess, receive; or attempt to purchase, possess, or receive; as a dealer, or in the capacity of a dealer, herring harvested in or from the EEZ, without having been issued, and in possession of, a valid herring dealer permit.

(B) Purchase, possess, receive; or attempt to purchase, possess, or receive; as a processor, or in the capacity of a processor, herring from a fishing vessel with an herring permit or from a dealer with a herring dealer permit, without having been issued, and in possession of, a valid herring processor permit.

(C) Sell, barter, trade, or otherwise transfer; or attempt to sell, barter, trade, or otherwise transfer; for a commercial purpose, any herring, unless the harvesting vessel has been issued a herring permit, or unless the herring

were harvested by a vessel without a Federal herring permit that fished exclusively in state waters.

(D) Purchase, possess, or receive, for a commercial purpose; or attempt to purchase, possess, or receive, for a commercial purpose; herring caught by a vessel without a herring permit, unless the herring was harvested by a vessel without a Federal herring permit that fished exclusively in state waters.

(E) Transfer, or attempt to transfer, herring to a Canadian transshipment vessel that is permitted in accordance with Pub. L. 104–297, if the amount of herring transshipped exceeds the amount of the border transfer specified in § 648.200.

(v) *Gear and vessel requirements.* (A) If fishing with midwater trawl or purse seine gear, fail to comply with the requirements of § 648.80(d) and (e).

(B) Catch, take, or harvest Atlantic herring in or from the EEZ with a U.S. vessel that exceeds the size limits specified in § 648.4(a)(10)(iii).

(vi) *Area requirements.* (A) For the purposes of observer deployment, fail to notify NMFS at least 72 hr prior to departing on a trip by a limited access herring vessel fishing for herring in the GOM/GB Exemption Area specified in § 648.80(a)(17).

(B) Possess, land, transfer, receive, sell, purchase, trade, or barter; or attempt to transfer, receive, sell, purchase, trade, or barter, or sell more than 2,000 lb (907 kg) of Atlantic herring per trip taken from the GOM/GB Herring Exemption Area, defined in § 648.86(a)(3)(ii)(A)(*1*), after the haddock cap has been reached pursuant to § 648.86(a)(3), unless all herring possessed or landed by the vessel was caught outside of GOM/GB Herring Exemption Area.

(C) Transit the GOM/GB Herring Exemption Area, when the 2,000–lb (907.2–kg) limit specified in § 648.86(a)(3)(ii)(A)(*1*) is in place, in possession of more than 2,000 lb (907.2 kg) of herring, unless all herring on board was caught outside of GOM/GB Herring Exemption Area and all fishing gear is stowed and not available for immediate use, as required by § 648.23(b).

(D) Fish for herring in Area 1A from June 1 through September 30 with midwater trawl gear.

(vii) *Transit and transport.* (A) Transit or be in an area closed to fishing for Atlantic herring pursuant to § 648.201(a) with more than 2,000 lb (907.2 kg) of herring, unless all fishing gear is stowed as specified by § 648.23(b).

(B) Receive Atlantic herring at sea in or from the EEZ, solely for transport, without a letter of authorization from the Regional Administrator.

(C) Fail to comply with a letter of authorization from the Regional Administrator.

(D) Transit Area 1A from June 1 through September 30 with more than 2,000 lb (907.2 kg) of herring without mid–water trawl gear properly stowed as required by § 648.23(b).

(E) Discard haddock at sea that has been brought on deck, or pumped into the hold, of a limited access herring vessel.

(viii) *VMS requirements.* (A) Catch, take, or harvest Atlantic herring in or from the EEZ, if a limited access herring vessel, unless equipped with an operable VMS unit.

(B) Fail to notify the NMFS Office of Law Enforcement of the time and date of landing via VMS, if a limited access herring vessel, at least 6 hr prior to landing herring at the end of a fishing trip.

(2) *Vessel and operator permit holders.* It is unlawful for any person owning or operating a vessel holding a valid Federal Atlantic herring permit, or issued an operator's permit, to do any of the following:

(i) Sell, purchase, receive, trade, barter, or transfer haddock or other regulated NE multispecies (cod, witch flounder, plaice, yellowtail flounder, pollock, winter flounder, windowpane flounder, redfish, and white hake); or attempt to sell, purchase, receive, trade, barter, or transfer haddock or other regulated NE for human consumption; if the regulated NE multispecies are landed by a vessel holding an All Areas Limited Access Herring Permit and/or an Areas 2 and 3 Limited Access Herring Permit.

(ii) Fail to comply with requirements for herring processors/dealers that handle individual fish to separate out, and retain, for at least 12 hr, all haddock offloaded from vessels holding an All Areas Limited Access Herring Permit and/or an Areas 2 and 3 Limited Access Herring Permit.

(iii) Sell, purchase, receive, trade, barter, or transfer; or attempt to sell, purchase, receive, trade, barter, or transfer; to another person, any haddock or other regulated NE multispecies (cod, witch flounder, plaice, yellowtail flounder, pollock, winter flounder, windowpane flounder, redfish, and white hake) separated out from a herring catch offloaded from a vessel that has an All Areas Limited Access Herring Permit and/or an Areas 2 and 3 Limited Access Herring Permit.

(iv) While operating as an at–sea herring processor, fail to comply with requirements to separate out and retain all haddock offloaded from a vessel that has an All Areas Limited Access Herring Permit and/or an Areas 2 and 3 Limited Access Herring Permit.

(3) *Presumption.* For purposes of this part, the following presumption applies: All Atlantic herring retained or possessed on a vessel issued any permit under § 648.4 are deemed to have been harvested from the EEZ, unless the preponderance of all submitted evidence demonstrates that such Atlantic herring were harvested by a vessel fishing exclusively in state waters.

(s) *Spiny dogfish*—(1) *All persons.* It is unlawful for any person to do any of the following:

(i) *Permit requirement.* Purchase or otherwise receive, other than solely for transport on land, spiny dogfish from any person on board a vessel issued a Federal spiny dogfish permit, unless the purchaser/receiver is in possession of a valid spiny dogfish dealer permit.

(ii) *Transfer and purchase.* Purchase or otherwise receive for a commercial purpose spiny dogfish landed by a federally permitted vessel in any state, from Maine to Florida, after the EEZ is closed to the harvest of spiny dogfish.

(2) *Vessel and operator permit holders.* It is unlawful for any person owning or operating a vessel issued a valid Federal spiny dogfish permit or issued a valid Federal operator's permit to do any of the following:

(i) *Permit requirement.* Sell, barter, trade or transfer; or attempt to sell, barter, trade or otherwise transfer; other than solely for transport on land, spiny dogfish, unless the dealer, transferor, or transferee has a valid dealer permit issued under § 648.6(a).

(ii) *Possession and landing.* (A) Fish for or possess spiny dogfish harvested in or from the EEZ after the EEZ is closed to the harvest of spiny dogfish.

(B) Land spiny dogfish for a commercial purpose after the EEZ is closed to the harvest of spiny dogfish.

(C) Possess more than the daily possession limit of spiny dogfish specified in § 648.235.

(iii) *Prohibition on finning.* Violate any of the provisions in §§ 600.1203 and 600.1204 applicable to the dogfish fishery that prohibit finning.

(t) *Red crab.* It is unlawful for any person to do any of the following:

(1) *Permit requirement.* Fish for, catch, possess, transport, land, sell, trade, or barter; or attempt to fish for, catch, possess, transport, land, sell, trade, or barter; any red crab or red crab parts in or from the EEZ portion of the Red Crab Management Unit, unless in possession of a valid Federal limited

access red crab vessel permit or Federal red crab incidental catch permit.

(2) *Possession and landing.* (i) Fish for, catch, possess, transport, land, sell, trade, or barter; or attempt to fish for, catch, possess, transport, land, sell, trade, or barter; red crab in excess of the limits specified in § 648.263.

(ii) *Restriction on female red crabs.* Fish for, catch, possess, transport, land, sell, trade, or barter; or attempt to fish for, catch, possess, transport, land, sell, trade, or barter; female red crabs in excess of one standard U.S. fish tote.

(3) *Transfer and purchase.* (i) Transfer at sea, or attempt to transfer at sea, either directly or indirectly, any red crab or red crab parts taken in or from the EEZ portion of the red crab management unit to any vessel.

(ii) Purchase, possess, or receive; or attempt to purchase, possess, or receive; more than 500 lb (226.8 kg) of whole red crab, or its equivalent in weight in accordance with the conversion provisions in § 648.263(a)(2), caught or possessed in the EEZ portion of the red crab management unit by a vessel without a valid Federal limited access red crab permit.

(iii) Purchase, possess, or receive; or attempt to purchase, possess, or receive; up to 500 lb (226.8 kg) of whole red crab, or its equivalent in weight in accordance with the conversion provisions in § 648.263(a)(2), caught in the EEZ portion of the Red Crab Management Unit by a vessel that has not been issued a valid limited access red crab permit or red crab incidental catch permit under this subpart.

(4) *DAS.* (i) Possess, transport, land, sell, trade, or barter; or attempt to possess, transport, land, sell, trade, or barter; while fishing under a red crab DAS, more than 500 lb (226.8 kg) of whole red crab, or its equivalent in weight in accordance with the conversion provisions in § 648.263(a)(2), per fishing trip, in or from the Red Crab Management Unit, unless in possession of a valid Federal limited access red crab vessel permit.

(ii) Fish for, catch, possess, transport, land, sell, trade, or barter; or attempt to possess, transport, land, sell, trade, or barter; red crab in or from the Red Crab Management Unit if the vessel has declared out of the fishery prior to the start of the fishing year.

(5) *Prohibitions on processing and mutilation.* (i) Retain, possess, or land red crab claws and legs separate from crab bodies in excess of one standard U.S. fish tote, if fishing under a red crab DAS with a valid Federal limited access red crab permit.

(ii) Retain, possess, or land any red crab claws and legs separate from crab bodies if the vessel has not been issued a valid Federal limited access red crab permit or has been issued a valid Federal limited access red crab permit, but is not fishing under a red crab DAS.

(iii) Retain, possess, or land more than two claws and eight legs per crab if the vessel has been issued a valid Federal red crab incidental catch permit, or has been issued a valid Federal limited access red crab permit and is not fishing under a red crab DAS.

(iv) Possess or land red crabs that have been fully processed at sea, i.e., engage in any activity that removes meat from any part of a red crab, unless a preponderance of available evidence shows that the vessel fished exclusively in state waters and was not issued a valid Federal permit.

(6) *Gear requirements.* Fail to comply with any gear requirements or restrictions specified at § 648.264.

(7) *Presumption.* For purposes of this part, the following presumption applies: All red crab retained or possessed on a vessel issued any permit under § 648.4 are deemed to have been harvested in or from the Red Crab Management Unit, unless the preponderance of all submitted evidence demonstrates that such red crab were harvested by a vessel fishing exclusively outside of the Red Crab Management Unit or in state waters.

(u) *Golden tilefish.* It is unlawful for any person owning or operating a vessel to do any of the following:

(1) *Permit requirements*—(i) *Operator permit.* Operate, or act as an operator of, a vessel with a tilefish permit, or a vessel fishing for or possessing tilefish in or from the Tilefish Management Unit, unless the operator has been issued, and is in possession of, a valid operator permit.

(ii) *Dealer permit.* Purchase, possess, receive for a commercial purpose; or attempt to purchase, possess, or receive for a commercial purpose; as a dealer, or in the capacity of a dealer, tilefish that were harvested in or from the Tilefish Management Unit, without having been issued, and in possession of, a valid tilefish dealer permit.

(iii) *Vessel permit.* Sell, barter, trade, or otherwise transfer from a vessel; or attempt to sell, barter, trade, or otherwise transfer from a vessel; for a commercial purpose, other than solely for transport on land, any tilefish, unless the vessel has been issued a tilefish permit, or unless the tilefish were harvested by a vessel without a tilefish permit that fished exclusively in state waters.

(2) *Possession and landing.* (i) Fish for, possess, retain, or land tilefish, unless:

(A) The tilefish are being fished for or were harvested in or from the Tilefish Management Unit by a vessel holding a valid tilefish permit under this part, and the operator on board such vessel has been issued an operator permit that is on board the vessel.

(B) The tilefish were harvested by a vessel that has not been issued a tilefish permit and that was fishing exclusively in state waters.

(C) The tilefish were harvested in or from the Tilefish Management Unit by a vessel engaged in recreational fishing.

(ii) Possess tilefish harvested in or from the Tilefish Management Unit in excess of the trip limit, pursuant to § 648.292, unless the vessel holds a valid limited access tilefish permit.

(iii) Land tilefish harvested in or from the Tilefish Management Unit for sale after the effective date of a notification in the **Federal Register**, pursuant to § 648.291, that notifies permit holders in a limited access category that the quota for that category is no longer available for the respective year.

(iv) Land tilefish in or from the Tilefish Management Unit, in excess of the trip limit pursuant to § 648.292, unless the vessel holds a valid limited access tilefish permit.

(3) *Transfer and purchase.* Purchase, possess, or receive for a commercial purpose, other than solely for transport on land; or attempt to purchase, possess, or receive for a commercial purpose, other than solely for transport on land; tilefish caught by a vessel without a tilefish permit, unless the tilefish were harvested by a vessel without a tilefish permit that fished exclusively in state waters.

(4) *Presumption.* For purposes of this part, the following presumption applies: All tilefish retained or possessed on a vessel issued any permit under § 648.4 are deemed to have been harvested in or from the Tilefish Management Unit, unless the preponderance of all submitted evidence demonstrates that such tilefish were harvested by a vessel fishing exclusively in state waters.

(v) *Skates*—(1) *All persons.* It is unlawful for any person to fish for, possess, transport, sell or land skates in or from the EEZ portion of the skate management unit, unless:

(A) Onboard a vessel that possesses a valid skate vessel permit.

(B) Onboard a federally permitted lobster vessel (i.e., transfer at sea recipient) while in possession of whole skates as bait only less than the maximum size specified at § 648.322(b)(2) and in accordance with § 648.322(c).

(2) *All Federal permit holders.* It is unlawful for any owner or operator of a

vessel holding a valid Federal permit to do any of the following:

(i) Retain, possess, or land barndoor or thorny skates taken in or from the EEZ portion of the skate management unit specified at § 648.2.

(ii) Retain, possess, or land smooth skates taken in or from the GOM RMA described at § 648.80(a)(1)(i).

(3) *Skate permitted vessel requirements.* It is unlawful for any owner or operator of a vessel holding a valid Federal skate permit to do any of the following:

(i) *Winter skates.* Fail to comply with the conditions of the skate wing possession and landing limits for winter skates specified at § 648.322, unless holding a letter of authorization to fish for and land skates as bait only at § 648.322(b).

(ii) *Possession and transfer.* (A) Transfer at sea, or attempt to transfer at sea, to any vessel, any skates taken in or from the EEZ portion of the Skate Management Unit, unless in compliance with the provisions of §§ 648.13(b) and 648.322(b).

(B) Purchase, possess, trade, barter, or receive; or attempt to purchase, possess, trade, barter, or receive; skates caught in the EEZ portion of the skate management unit by a vessel that has not been issued a valid Federal skate permit under this part.

(C) Fish for, catch, possess, transport, land, sell, trade, or barter; or attempt to fish for, catch, possess, transport, land, sell, trade, or barter; whole skates and skate wings in excess of the possession limits specified at § 648.322.

(iii) *DAS notification and skate wing possession.* Fail to comply with the provisions of the DAS notification program specified in §§ 648.53, 648.82, and 648.92; for the Atlantic sea scallop, NE multispecies, and monkfish fisheries, respectively; when issued a valid skate permit and fishing under the skate wing possession limits at § 648.322.

(iv) *SNE Trawl and Gillnet Exemption areas restrictions.* Fail to comply with the restrictions under the SNE Trawl and Gillnet Exemption areas for the NE skate fisheries at §§ 648.80(b)(5)(i)(B) and 648.80(b)(6)(i)(B).

(4) *Presumption.* For purposes of this part, the following presumption applies: All skates retained or possessed on a vessel are deemed to have been harvested in or from the Skate Management Unit, unless the preponderance of evidence demonstrates that such skates were harvested by a vessel, that has not been issued a Federal skate permit, fishing exclusively outside of the EEZ portion of the skate management unit or only in state waters.

10. In § 648.51, paragraph (b)(4)(v) is added to read as follows:

§ 648.51 Gear and crew restrictions.

* * * * *

(b) * * *

(4) * * *

(v) *Measurement of twine top mesh size.* Twine top mesh size is measured by using a wedge–shaped gauge having a taper of 2 cm (0.79 inches) in 8 cm (3.15 inches) and a thickness of 2.3 mm (0.09 inches), inserted into the meshes under a pressure or pull of 8 kg (17.64 lb). The mesh size is the average of the measurements of any series of 20 consecutive meshes for twine tops having 75 or more meshes, and 10 consecutive meshes for twine tops having fewer than 75 meshes. The mesh in the twine top must be measured at least five meshes away from where the twine top mesh meets the rings, running parallel to the long axis of the twine top.

* * * * *

11. In § 648.52, paragraph (c) is revised to read as follows:

§ 648.52 Possession and landing limits.

* * * * *

(c) A vessel issued an Incidental scallop permit, or an IFQ or NGOM scallop permit that is not declared into the IFQ or NGOM scallop fishery as required under § 648.10(f), unless exempted under the state waters exemption program described under § 648.54, may not possess or land, per trip, more than 40 lb (18.1 kg) of shucked, or 5 bu (1.76 hL) of in–shell scallops. Such a vessel may land scallops only once in any calendar day. Such a vessel may possess up to 10 bu (3.52 hL) of in–shell scallops seaward of the VMS Demarcation Line.

* * * * *

12. In § 648.53, paragraph (b)(4) is revised to read as follows:

§ 648.53 Total allowable catch, DAS allocations, and Individual Fishing Quotas.

* * * * *

(b) * * *

(4) Each vessel qualifying for one of the three DAS categories specified in the table in this paragraph (b)(4) (Full–time, Part–time, or Occasional) shall be allocated the maximum number of DAS for each fishing year it may participate in the open area limited access scallop fishery, according to its category. A vessel whose owner/operator has declared out of the scallop fishery, pursuant to the provisions of § 648.10, or that has used up its maximum allocated DAS, may leave port without being assessed a DAS, as long as it has made an appropriate VMS declaration, as specified in § 648.10(f), does not fish for or land per trip, or possess at any time, more than 400 lb (181.4 kg) of shucked or 50 bu (17.6 hL) of in–shell scallops, and complies with all other requirements of this part. The annual open area DAS allocations for each category of vessel for the fishing years indicated, after deducting DAS for observer and research DAS set–asides, are as follows:

DAS Category	2008	2009[1]
Full–time	35	42
Part–time	14	17
Occasional	3	3

[1]If the IFQ program implementation is delayed beyond March 1, 2009, the 2009 DAS allocations will be: Full–time — 37; part–time — 15, occasional — 3.

* * * * *

13. In § 648.54, paragraphs (a)(1), (a)(2), and (d) are revised to read as follows:

§ 648.54 State waters exemption.

(a) * * *

(1) *DAS requirements.* Any vessel issued a limited access scallop permit is exempt from the DAS requirements specified in § 648.53(b) while fishing exclusively landward of the outer boundary of a state's waters, provided the vessel complies with paragraphs (d) through (g) of this section, and the notification requirements of § 648.10(f)(5).

(2) *Gear and possession limit restrictions.* Any vessel issued a limited access scallop permit that is exempt from the DAS requirements of

§ 648.53(b) under this paragraph (a), and that has complied with the notification requirements of § 648.10(f)(5), is also exempt from the gear restrictions specified in § 648.51(a), (b), (e)(1), and (e)(2), and the possession restrictions specified in § 648.52(a), while fishing exclusively landward of the outer boundary of the waters of a state that has been issued a state waters exemption, provided the vessel complies with paragraphs (d) through (g) of this section.

* * * * *

(d) *Notification requirements.* Vessels fishing under the exemptions provided by paragraph(s) (a)(1) and/or (a)(2) of this section must notify the Regional Administrator in accordance with the provisions of § 648.10(f)(5).

* * * * *

14. In § 648.60, paragraph (a)(2) is revised to read as follows:

§ 648.60 Sea scallop access area program requirements.

(a) * * *

(2) Vessels participating in the Sea Scallop Access Area Program must comply with the trip declaration requirements specified in § 648.10(f) and vessel notification requirements specified in § 648.11(g) for observer deployment.

* * * * *

15. In § 648.82, paragraphs (e)(2)(iii)(B), (e)(3), (j)(1)(ii)(B), and (j)(2) are revised to read as follows:

§ 648.82 Effort–control program for NE multispecies limited access vessels.

* * * * *

(e) * * *

(2) * * *

(iii) * * *

(B) *Differential DAS counting when fishing in the SNE Differential DAS Area.* For NE multispecies DAS vessels that intend to fish, or do fish, some or all of their trip under a Category A DAS in the SNE Differential DAS Area, other than for transiting purposes, each Category A DAS, or part thereof, shall be counted at the ratio of 2 to 1 for the duration of the time spent in the SNE Differential DAS Area, as determined from VMS positional data. A vessel that has not declared its intent to fish in the SNE Differential DAS Area, and that is not transiting, as specified in paragraph (e)(2)(v) of this section, may be in the SNE Differential DAS Area, provided the vessel's fishing gear is stowed in accordance with the provisions of § 648.23(b) for the entire time the vessel is in the area and the vessel declares immediately upon entering the SNE Differential DAS Area, via VMS, that it is in the area. A vessel that fishes in both the GOM Differential Area and the SNE Differential DAS Area on the same trip will be charged DAS at the rate of 2:1 for the entire trip. If the Regional Administrator requires the use of the DAS call–in, as described under § 648.10(e)(2)(iv), a vessel that fishes any portion of its trip in the SNE Differential DAS Area will be charged DAS at the rate of 2 to 1 for the entire trip.

* * * * *

(3) *Regular B DAS Program 24–hr clock.* For a vessel electing to fish in the Regular B DAS Program, as specified at § 648.85(b)(6), that remains fishing under a Regular B DAS for the entire fishing trip (without a DAS flip), DAS shall accrue at the rate of 1 full DAS for each calendar day, or part of a calendar day fished. For example, a vessel that fished on 1 calendar day from 6 a.m. to 10 p.m. would be charged 24 hr of Regular B DAS, not 16 hr; a vessel that left on a trip at 11 p.m. on the first calendar day and returned at 10 p.m. on the second calendar day would be charged 48 hr of Regular B DAS instead of 23 hr, because the fishing trip would have spanned 2 calendar days. For the purpose of calculating trip limits specified under § 648.86, the amount of DAS deducted from a vessel's DAS allocation shall determine the amount of fish the vessel can land legally. For a vessel electing to fish in the Regular B DAS Program, as specified at § 648.85(b)(6), while also fishing in one of the Differential DAS Areas, defined in paragraph (e)(2)(i) of this section, Category B DAS shall accrue at the rate described in this paragraph (e)(3), unless the vessel flips to a Category A DAS, in which case the vessel is subject to the pertinent DAS accrual restrictions of paragraph (e)(2)(iii) of this section for the entire trip. For vessels electing to fish in both the Regular B DAS Program, as specified in § 648.85(b)(8), and in the Eastern U.S./Canada Area, as specified in § 648.85(a), DAS counting will begin and end according to the DAS rules specified in § 648.10(e)(2)(iii) or (e)(2)(iv).

* * * * *

(j) * * *

(1) * * *

(ii) * * *

(B) Vessels shall declare their required time periods through the notification procedures specified in § 648.10(k)(2).

* * * * *

(2) *Trip gillnet vessels.* When fishing under a NE multispecies DAS, a Trip gillnet vessel is required to remove all gillnet gear from the water before calling out of a NE multispecies DAS under § 648.10(h)(5). When not fishing under a NE multispecies DAS, Trip gillnet vessels may fish in an exempted fishery with gillnet gear, as authorized by § 648.80. Vessels electing to fish under the Trip gillnet designation must have on board written confirmation issued by the Regional Administrator that the vessel is a Trip gillnet vessel.

* * * * *

16. In § 648.85, paragraphs (a)(3)(ii)(A)(*1*), (b)(6)(i), (b)(6)(iv)(A) and (B), (b)(6)(v), and (b)(7)(iv)(A) are revised to read as follows:

§ 648.85 Special management programs.

(a) * * *

(3) * * *

(ii) * * *

(A) * * *

(*1*) The vessel operator must notify NMFS via VMS prior to leaving the Eastern U.S./Canada Area (including at the time of initial declaration into the Eastern U.S./Canada Area) that it is also electing to fish outside the Eastern U.S./Canada Area. With the exception of vessels participating in the Regular B DAS Program and fishing under a Regular B DAS, once a vessel electing to fish outside of the Eastern U.S./Canada Area has left the Eastern U.S./Canada Area, Category A DAS shall accrue from the time the vessel crosses the VMS Demarcation Line at the start of its fishing trip until the time the vessel crosses the VMS Demarcation Line on its return to port, in accordance with § 648.10(e)(2)(iii) and (e)(2)(iv).

* * * * *

(b) * * *

(6) *Regular B DAS Program.*—(i) *Eligibility.* Vessels issued a valid limited access NE multispecies DAS permit and allocated Regular B DAS are eligible to participate in the Regular B DAS Program, and may elect to fish under a Regular B DAS, provided they comply with the requirements and restrictions of this paragraph (b)(6), and provided the use of Regular B DAS is not restricted according to paragraphs (b)(6)(iv)(G) or (H), or paragraph (b)(6)(vi) of this section. Vessels are required to comply with the no discarding and DAS flip requirements specified in paragraph (b)(6)(iv)(E) of this section, and the DAS balance and accrual requirements specified in paragraph (b)(6)(iv)(F) of this section. Vessels may fish under the B Regular DAS Program and in the U.S./Canada Management Area on the same trip, but may not fish under the Regular B DAS Program and in a SAP on the same trip.

* * * * *

(iv) *Program Requirements*—(A) *VMS requirement.* A NE multispecies DAS

vessel fishing in the Regular B DAS Program described in paragraph (b)(6)(i) of this section must have installed on board an operational VMS unit that meets the minimum performance criteria specified in §§ 648.9 and 648.10.

(B) *Observer notification.* For the purposes of selecting vessels for observer deployment, a vessel must provide notice to NMFS of the vessel name; contact name for coordination of observer deployment; telephone number for contact; the date, time, and port of departure; and the planned fishing area or areas (GOM, GB, or SNE/MA) at least 72 hr prior to the beginning of any trip declared into the Regular B DAS Program as required by paragraph (b)(6)(iv)(C) of this section, and in accordance with the Regional Administrator's instructions. Providing notice of the area that the vessel intends to fish does not restrict the vessel's activity on that trip to that area only (i.e., the vessel operator may change his/her plans regarding planned fishing areas).

* * * * *

(v) *Definition of incidental TAC stock areas.* Under the Regular B DAS Program, the species stock areas associated with the incidental TACs are defined below. Copies of a chart depicting these areas are available upon request from the Regional Administrator.

* * * * *

(7) * * *

(iv) * * *

(A) *DAS use restrictions.* Vessels fishing in the Closed Area I Hook Gear Haddock SAP may not initiate a DAS flip. Vessels are prohibited from fishing in the Closed Area I Hook Gear Haddock SAP while making a trip under the Regular B DAS Program described in paragraph (b)(6) of this section. DAS will be charged as described in § 648.10.

* * * * *

17. In § 648.86, paragraphs (b)(1)(ii)(B) and (i) are revised to read as follows:

§ 648.86 NE multispecies possession restrictions.

* * * * *

(b) * * *

(1) * * *

(ii) * * *

(B) Vessels that have been authorized by the Regional Administrator, in lieu of VMS, to utilize the DAS call–in system, as specified in § 648.10(h), may not call out of the DAS program under § 648.10(h)(5) and may not depart from a dock or mooring in port, unless transiting as allowed in paragraph (b)(3) of this section, until the rest of the additional 24–hr block of DAS has elapsed, regardless of whether all of the cod on board is offloaded (e.g., a vessel that has been called into the DAS program for 25 hr at the time of landing may land only up to 1,600 lb (725.6 kg) of cod, provided the vessel does not call out of the DAS program or leave port until 48 hr have elapsed from the beginning of the trip.)

* * * * *

(i) *Offloading requirement for vessels possessing species regulated by a daily possession limit.* A vessel that has ended a trip as specified in § 648.10(e)(2)(iii) or (h)(5) that possesses on board species regulated by a daily possession limit (i.e., pounds per DAS), as specified at § 648.85 or § 648.86, must offload species in excess of the daily landing limit prior to leaving port on a subsequent trip. A vessel may retain on board up to one day's worth of such species prior to the start of a subsequent trip. Other species regulated by an overall trip limit may be retained on board for a subsequent trip. For example, a vessel that possesses cod and winter flounder harvested from Georges Bank is subject to a daily possession limit for cod of 1,000 lb (453 kg)/DAS and an overall trip limit of 5,000 lb (2,267 kg)/trip for winter flounder. In this example, the vessel would be required to offload any cod harvested in excess of 1,000 lb (453 kg) (i.e., the vessel may retain up to 1,000 lb (453 kg) of Georges Bank cod, but must offload any additional cod), but may retain on board winter flounder up to the maximum trip limit prior to leaving port and crossing the VMS Demarcation Line to begin a subsequent trip.

* * * * *

18. In § 648.95, paragraph (e)(4) is revised to read as follows:

§ 648.95 Offshore fishery program in the SFMA.

* * * * *

(e) * * *

(4) A vessel issued a Category F permit must have installed on board an operational VMS unit that meets the minimum performance criteria specified in §§ 648.9 and 648.10 during the entire season established under paragraph (d) of this section. Unless otherwise required to maintain an operational VMS unit under the VMS notification requirements specified at § 648.10(b), a vessel issued a Category F permit may turn off its VMS unit outside of that season.

* * * * *

19. In § 648.263, paragraph (b)(3) is revised to read as follows:

§ 648.263 Red crab possession and landing restrictions.

* * * * *

(b) * * *

(3) *Mutilation restrictions.* (i) A vessel may not retain, possess, or land red crab claws and legs separate from crab bodies.

(ii) A vessel may not retain, possess, or land more than two claws and eight legs per crab.

[FR Doc. E9–844 Filed 1–14–09; 8:45 am]

BILLING CODE 3510–22–S

Notices

Federal Register

Vol. 74, No. 10

Thursday, January 15, 2009

This section of the FEDERAL REGISTER contains documents other than rules or proposed rules that are applicable to the public. Notices of hearings and investigations, committee meetings, agency decisions and rulings, delegations of authority, filing of petitions and applications and agency statements of organization and functions are examples of documents appearing in this section.

DEPARTMENT OF AGRICULTURE

Submission for OMB Review; Comment Request

January 9, 2009.

The Department of Agriculture has submitted the following information collection requirement(s) to OMB for review and clearance under the Paperwork Reduction Act of 1995, Public Law 104–13. Comments regarding (a) Whether the collection of information is necessary for the proper performance of the functions of the agency, including whether the information will have practical utility; (b) the accuracy of the agency's estimate of burden including the validity of the methodology and assumptions used; (c) ways to enhance the quality, utility and clarity of the information to be collected; (d) ways to minimize the burden of the collection of information on those who are to respond, including through the use of appropriate automated, electronic, mechanical, or other technological collection techniques or other forms of information technology should be addressed to: Desk Officer for Agriculture, Office of Information and Regulatory Affairs, Office of Management and Budget (OMB), *OIRA_Submission@OMB.EOP.GOV* or fax (202) 395–5806 and to Departmental Clearance Office, USDA, OCIO, Mail Stop 7602, Washington, DC 20250–7602. Comments regarding these information collections are best assured of having their full effect if received within 30 days of this notification. Copies of the submission(s) may be obtained by calling (202) 720–8681.

An agency may not conduct or sponsor a collection of information unless the collection of information displays a currently valid OMB control number and the agency informs potential persons who are to respond to the collection of information that such persons are not required to respond to the collection of information unless it displays a currently valid OMB control number.

National Agricultural Statistics Service

Title: Field Crops Production.

OMB Control Number: 0535–0002.

Summary of Collection: One of the National Agricultural Statistics Services' (NASS) primary functions is to prepare and issue current state and national estimates of crop and livestock production, prices, and disposition. The general authority for these data collection activities is granted under U.S. Code Title 7, Section 2204. NASS collects information on field crops to monitor agricultural developments across the country that may impact on the nation's food supply. To help set these estimates, field crops production data is collected. NASS will collect information through the use of mail, telephone, and personnel interviews surveys.

Need and Use of the Information: NASS collects information on field crops to monitor agricultural developments across the country that may impact on the nation's food supply. The Secretary of Agriculture uses estimates of crop production to administer farm program legislation and to make decisions relative to the export-import programs. Collecting this information less frequently would eliminate the data needed to keep the Department abreast of changes at the State and national level.

Description of Respondents: Farms; Business or other for-profits.

Number of Respondents: 609,600.

Frequency of Responses: Reporting: Weekly, Monthly, Quarterly, Annually.

Total Burden Hours: 175,590.

Charlene Parker,

Departmental Information Collection Clearance Officer.

[FR Doc. E9–739 Filed 1–14–09; 8:45 am]

BILLING CODE 3410–20–P

DEPARTMENT OF AGRICULTURE

Food and Nutrition Service

Summer Food Service Program; 2009 Reimbursement

AGENCY: Food and Nutrition Service, USDA.

ACTION: Notice.

SUMMARY: This notice informs the public of the annual adjustments to the reimbursement rates for meals served in the Summer Food Service Program for Children. These adjustments address changes in the Consumer Price Index, as required under the Richard B. Russell National School Lunch Act. The 2009 reimbursement rates are presented as a combined set of rates to highlight simplified cost accounting procedures that are extended nationwide by enactment of the Fiscal Year 2008 Consolidated Appropriations Act. The 2009 rates are also presented individually, as separate operating and administrative rates of reimbursement, to show the effect of the Consumer Price Index adjustment on each rate.

DATES: *Effective Date:* January 1, 2009.

FOR FURTHER INFORMATION CONTACT: Julie Brewer, Head, CACFP and SFSP Section, Policy and Program Development Branch, Child Nutrition Division, Food and Nutrition Service, United States Department of Agriculture, 3101 Park Center Drive, Room 640, Alexandria, Virginia 22302, 703–305–2590.

SUPPLEMENTARY INFORMATION: This Program is listed in the Catalog of Federal Domestic Assistance under No. 10.559 and is subject to the provisions of Executive Order 12372 which requires intergovernmental consultation with State and local officials (7 CFR part 3015, subpart V, and final rule-related notice published at 48 FR 29114, June 24, 1983).

In accordance with the Paperwork Reduction Act of 1995 (44 U.S.C. 3501–3518), no new recordkeeping or reporting requirements have been included that are subject to approval from the Office of Management and Budget.

This notice is not a rule as defined by the Regulatory Flexibility Act (5 U.S.C. 601–612) and thus is exempt from the provisions of that Act. Additionally, this notice has been determined to be exempt from review by the Office of Management and Budget under Executive Order 12866.

Definitions

The terms used in this notice have the meaning ascribed to them under 7 CFR part 225 of the Summer Food Service Program regulations.

Background

This notice informs the public of the annual adjustments to the reimbursement rates for meals served in the Summer Food Service Program (SFSP). As required under sections 12 (42 U.S.C. 1760(f)) and 13 (42 U.S.C. 1761) of the Richard B. Russell National School Lunch Act (NSLA), and SFSP regulations in 7 CFR part 225, the United States Department of Agriculture (USDA) announces the adjustments in SFSP payments for meals served to participating children during calendar year 2009.

The 2009 reimbursement rates are presented as a combined set of rates to highlight simplified cost accounting procedures. Section 738 of the Consolidated Appropriations Act, 2008, Public Law 110–161, enacted on December 26, 2007, extends these procedures to all States. Beginning January 1, 2008, reimbursement is based solely on a ''meals times rates'' calculation, without comparison to actual or budgeted costs.

Sponsors receive reimbursement that is determined by the number of reimbursable meals served multiplied by the combined rates for food service operations and administration. However, the combined rate is based on separate operating and administrative rates of reimbursement, each of which is adjusted differently for inflation.

Calculation of Rates

The combined rates are constructed from individually authorized operating and administrative reimbursements. Simplified procedures provide flexibility, enabling sponsors to manage their reimbursements to pay for any allowable cost, regardless of the cost category. Although the requirement to categorize costs as ''operational'' or ''administrative'' has been eliminated, this does not diminish the sponsors' responsibility for providing the best possible nutrition benefit to children, while ensuring proper administration of the Program.

The operating and administrative rates are calculated separately. However, the calculations of adjustments for both are based on the same set of changes in the food away from home series of the Consumer Price Index for All Urban Consumers, published by the Bureau of Labor Statistics of the United States Department of Labor. They represent a 4.9 percent increase in this series for the 12 month period, from November 2007 through November 2008 (from 209.854 in November 2007 to 220.043 in November 2008).

Table of 2009 Reimbursement Rates

Presentation of the 2009 maximum per meal rates for meals served to children in SFSP combines the results from the calculations of operational and administrative payments, which are further explained in this notice. The total amount of payments to State agencies for disbursement to SFSP sponsors will be based upon these adjusted combined rates and the number of meals of each type served. These adjusted rates will be in effect from January 1, 2009 through December 31, 2009.

SUMMER FOOD SERVICE PROGRAM

2009 Reimbursement Rates (Combined)

Per meal rates in whole or fractions of U.S. dollars	All States except Alaska and Hawaii		Alaska		Hawaii	
	Rural or self-prep sites	All other types of sites	Rural or self-prep sites	All other types of sites	Rural or self-prep sites	All other types of sites
Breakfast	1.8150	1.7800	2.9450	2.8900	2.1225	2.0825
Lunch or Supper	3.1825	3.1300	5.1575	5.0750	3.7225	3.6625
Snack	0.7525	0.7350	1.2225	1.1950	0.8750	0.8550

Operating Rates

The portion of the SFSP rates for operating costs is based on payment amounts set in section 13(b)(1) of the NSLA (42 U.S.C. 1761(b)(1)). They are rounded down to the nearest whole cent, as required by section 11(a)(3)(B) of the NSLA (42 U.S.C. 1759(a)(3)(B)).

SUMMER FOOD SERVICE PROGRAM

Operating Component of 2009 Reimbursement Rates

Operating rates in U.S. dollars, rounded down to the nearest whole cent	All States except Alaska and Hawaii	Alaska	Hawaii
Breakfast	1.65	2.68	1.93
Lunch or Supper	2.88	4.67	3.37
Snack	0.67	1.09	0.78

Administrative Rates

The administrative cost component of the reimbursement is authorized under section 13(b)(3) of the NSLA (42 U.S.C. 1761(b)(3)). Rates are higher for sponsors of sites located in rural areas and for ''self-prep'' sponsors that prepare their own meals, at the SFSP site or at a central facility, instead of purchasing them from vendors. The administrative portion of SFSP rates are adjusted, either up or down, to the nearest quarter-cent.

SUMMER FOOD SERVICE PROGRAM

Administrative Component of 2009 Reimbursement Rates

Administrative rates in U.S. dollars, adjusted, up or down, to the nearest quarter-cent	All States except Alaska and Hawaii		Alaska		Hawaii	
	Rural or self-prep sites	All other types of sites	Rural or self-prep sites	All other types of sites	Rural or self-prep sites	All other types of sites
Breakfast	0.1650	0.1300	0.2650	0.2100	0.1925	0.1525
Lunch or Supper	0.3025	0.2500	0.4875	0.4050	0.3525	0.2925
Snack	0.0825	0.0650	0.1325	0.1050	0.0950	0.0750

Authority: Sections 9, 13, and 14, Richard B. Russell National School Lunch Act, as amended (42 U.S.C. 1758, 1761, and 1762a, respectively).

Dated: January 12, 2009.

E. Enrique Gomez,

Acting Administrator.

[FR Doc. E9–787 Filed 1–14–09; 8:45 am]

BILLING CODE 3410–30–P

DEPARTMENT OF AGRICULTURE

Rural Utilities Service

Fitzgerald Renewable Energy, LLC: Notice of Intent To Hold Public Scoping Meetings and Prepare an Environmental Assessment

AGENCY: Rural Utilities Service, USDA.

ACTION: Notice of intent to hold public scoping meetings and prepare an environmental assessment.

SUMMARY: The Rural Utilities Service (RUS), an Agency delivering the United States Department of Agriculture (USDA) Rural Development Utilities Programs, hereinafter referred to as Rural Development and/or the Agency, intends to hold public scoping meetings and prepare an Environmental Assessment (EA) in connection with potential impacts related to a project proposed by Fitzgerald Renewable Energy, LLC (FRE), with headquarters in Winter Park, FL. The proposal consists of the construction of a 55 megawatt (MW) biomass power plant located in Ben Hill County, Georgia on Peachtree Road. FRE is requesting the Agency to provide financial assistance for the proposed action.

DATES: USDA Rural Development will conduct a Scoping Meeting in an open house format, seeking the input of the public and other interested parties for the preparation of an EA. The meeting will be held on January 29, 2009, from 5 p.m. until 7 p.m., at The Grand Conference Center, 115 South Main Street, Fitzgerald, GA 31750, Telephone (229) 426–5090. Comments regarding the proposed action may be submitted (orally or in writing) at the public scoping meeting or in writing and received within 30 days after the scoping meeting by Rural Development at the address provided in this notice.

ADDRESSES: To send comments or for further information, please contact Stephanie Strength, Environmental Protection Specialist, USDA, Rural Development Utilities Programs, Engineering and Environmental Staff, 1400 Independence Avenue, SW., Stop 1571, Washington, DC 20250–1571, Telephone (202) 720–0468, or e-mail *stephanie.strength@wdc.usda.gov*.

An Electric Alternatives Evaluation and Site Selection Study Report (Report), prepared by FRE, will be presented at the public scoping meeting. The Report will be available for public review at the Agency's address provided in this notice, at the Agency's Web site: *http://www.usda.gov/rus/water/ees/ea.htm*, at Fitzgerald Renewable Energy, LLC, 152 Lincoln Avenue, Winter Park, FL 32789, and at the Fitzgerald/Ben Hill County Library, 123 North Main Street, Fitzgerald, GA 31750, Telephone: 229–426–5080.

SUPPLEMENTARY INFORMATION: FRE proposes to construct a 55 MW biomass power plant on approximately 40 acres on Peachtree Road in Fitzgerald, GA. It is anticipated that the facilities would be in service in 2011.

Government agencies, private organizations, and the public are invited to participate in the planning and analysis of the proposed project. Representatives from the Agency and FRE will be available at the scoping meeting to discuss the Agency's environmental review process, describe the proposal, the purpose and need for the proposal, alternatives under consideration, and to discuss the scope of environmental issues to be considered, answer questions, and accept comments.

From information provided in the Report, input that may be provided by government agencies, private organizations, and the public, FRE will prepare an environmental report to be submitted to the Agency for review. The Agency will use the environmental report to determine the significance of the impacts of the proposal and, if acceptable, will adopt it as its EA for the proposal. The Agency's EA would be available for review and comment for 30 days.

Should the Agency determine, based on the EA, that the impacts of the construction and operation of the power plant would not have a significant environmental impact, it will prepare a finding of no significant impact; otherwise, the Agency would proceed to prepare an environmental impact statement. Public notification of a finding of no significant impact or the intent to prepare an environmental impact statement would be published in the **Federal Register** and in newspapers with a circulation in the project area.

Any final action by the Agency related to the proposed project will be subject to, and contingent upon, compliance with environmental review requirements as prescribed by the Agency's environmental policies and procedures (7 CFR part 1794).

Dated: January 9, 2009.

Mark S. Plank,

Director, Engineering and Environmental Staff, USDA/Rural Development Utilities Programs.

[FR Doc. E9–775 Filed 1–14–09; 8:45 am]

BILLING CODE 3410–15–P

DEPARTMENT OF COMMERCE

International Trade Administration

[A–549–821]

Polyethylene Retail Carrier Bags from Thailand: Final Results and Partial Rescission of Antidumping Duty Administrative Review

AGENCY: Import Administration, International Trade Administration, Department of Commerce.

SUMMARY: On September 9, 2008, the Department of Commerce published the preliminary results of the 2006/2007 administrative review of the antidumping duty order on polyethylene retail carrier bags from Thailand. We gave interested parties an opportunity to comment on the preliminary results. Based on our analysis of the comments received and an examination of our calculations, we have made certain changes for the final results. The final weighted–average dumping margins for the respondents are listed below in the ''Final Results of the Review'' section of this notice.

EFFECTIVE DATE: January 15, 2009.

FOR FURTHER INFORMATION CONTACT: Kristin Case or Richard Rimlinger, AD/CVD Operations, Office 5, Import Administration, International Trade Administration, U.S. Department of Commerce, 14th Street and Constitution Avenue, NW, Washington, DC 20230; telephone (202) 482–3174 or (202) 482–4477, respectively.

SUPPLEMENTARY INFORMATION:

Background

On September 9, 2008, the Department of Commerce (the Department) published *Polyethylene Retail Carrier Bags from Thailand: Preliminary Results of Antidumping Duty Administrative Review and Intent to Rescind in Part*, 73 FR 52288 (September 9, 2008) (*Preliminary Results*), in the **Federal Register**. The administrative review covers the following producers/exporters: King Pac Industrial Co., Ltd. (King Pac), Naraipak Co., Ltd., and Narai Packaging (Thailand) Ltd. (collectively NPG), Poly Plast (Thailand) Co., Ltd. (Poly Plast), and Master Packaging Co., Ltd. (Master Packaging).[1] The period of review is August 1, 2006, through July 31, 2007.

We invited parties to comment on the *Preliminary Results*. On October 15, 2008, we received case briefs from the Polyethylene Retail Carrier Bag Committee and its individual members, Hilex Poly Co., LLC, and Superbag Corporation (collectively, the petitioners), and KYD Ltd. (KYD), an importer of subject merchandise. On October 23, 2008, we received rebuttal briefs from the petitioners and KYD. At the request of KYD, we held a public hearing on October 29, 2008.

We have conducted this review in accordance with section 751(a) of the Tariff Act of 1930, as amended (the Act).

Scope of the Order

The merchandise subject to the antidumping duty order is polyethylene retail carrier bags (PRCBs) which may be referred to as t–shirt sacks, merchandise bags, grocery bags, or checkout bags. The subject merchandise is defined as non–sealable sacks and bags with handles (including drawstrings), without zippers or integral extruded closures, with or without gussets, with or without printing, of polyethylene film having a thickness no greater than 0.035 inch (0.889 mm) and no less than 0.00035 inch (0.00889 mm), and with no length or width shorter than 6 inches (15.24 cm) or longer than 40 inches (101.6 cm). The depth of the bag may be shorter than 6 inches but not longer than 40 inches (101.6 cm).

PRCBs are typically provided without any consumer packaging and free of charge by retail establishments, e.g., grocery, drug, convenience, department, specialty retail, discount stores, and restaurants, to their customers to package and carry their purchased products. The scope of the order excludes (1) polyethylene bags that are not printed with logos or store names and that are closeable with drawstrings made of polyethylene film and (2) polyethylene bags that are packed in consumer packaging with printing that refers to specific end–uses other than packaging and carrying merchandise from retail establishments, *e.g.*, garbage bags, lawn bags, trash–can liners.

As a result of recent changes to the *Harmonized Tariff Schedule of the United States* (HTSUS), imports of the subject merchandise are currently classifiable under statistical category 3923.21.0085 of the HTSUS. Furthermore, although the HTSUS subheading is provided for convenience and customs purposes, the written description of the scope of the order is dispositive.

Rescission

In the *Preliminary Results*, we explained that Kor Ratthanakit Co., Ltd. (Kor Ratthanakit), reported that it had no shipments of subject merchandise covered by this review. Additionally, we stated that, because our review of information from U.S. Customs and Border Protection (CBP) supported Kor Ratthanakit's claim, we would rescind the review with respect to Kor Ratthanakit if we continued to find that Kor Ratthanakit did not have any shipments of subject merchandise to the United States during the period of review. *See Preliminary Results*, 73 FR at 52289. Because we have not received information indicating that Kor Ratthanakit had any shipments of subject merchandise during the period of review we are rescinding the administrative review with respect to Kor Ratthanakit.

Analysis of Comments Received

All issues raised in the case and rebuttal briefs by parties to this review are addressed in the Issues and Decision Memorandum for the Antidumping Duty Administrative Review of Polyethylene Retail Carrier Bags from Thailand for the Period of Review August 31, 2006, through July 31, 2007 (Decision Memorandum), which is dated January 7, 2009, and hereby adopted by this notice. Attached to this notice as an appendix is a list of the issues which parties have raised and to which we have responded in the Decision Memorandum. Parties can find a complete discussion of all issues raised in this review and the corresponding recommendations in this public memorandum, which is on file in the Department's Central Records Unit, Room 1117 of the main Commerce building (CRU). In addition, a complete version of the Decision Memorandum can be accessed directly on the Web at http://ia.ita.doc.gov/frn. The paper copy and electronic version of the Decision Memorandum are identical in content.

Changes Since the Preliminary Results

In our preliminary results for NPG, we used the most recently submitted cost–of-production data, received on August 25, 2008, but we did not use the updated constructed–value data contained in the same submission. Because this submission contained both revised cost and constructed–value data, we have used all of this data in the calculation of NPG's final dumping margin.

For Poly Plast, we found it appropriate to assign partial adverse facts available to certain unreported U.S. sales. During the course of verification of the information Poly Plast submitted in this review, we found that Poly Plast did not report certain U.S. sales of subject merchandise. Because the administrative record lacks

[1] As discussed in the *Preliminary Results*, we considered both King Pac and King Pak Ind. Co., Ltd. (King Pak), to be alternative spellings of the name of one company. *See Preliminary Results*, 73 FR at 52288, n. 1.

all of the information necessary to calculate dumping margins for these sales, we find it appropriate to rely on partial facts available pursuant to section 776(a) of the Act. Furthermore, because Poly Plast possessed the necessary records to provide a complete U.S. sales list but did not do so, we find that it did not act to the best of its ability to comply with our request for information.

Accordingly, because Poly Plast failed to cooperate in reporting all of its U.S. sales of subject merchandise, we find that use of information adverse to the interests of Poly Plast, as facts otherwise available, is appropriate pursuant to section 776(b) of the Act. As adverse facts available we have applied the highest transaction–specific margin we determined for sales Poly Plast reported to the value of unreported U.S. sales. For a complete discussion on this issue, see Decision Memorandum at Comment 2.

Sales Below Cost in the Home Market

For these final results of review, the Department disregarded home–market sales by NPG and Poly Plast that failed the cost–of-production test.

Final Results of the Review

As a result of our review, we determine that the following percentage weighted–average dumping margins exist on PCRBs from Thailand for the period August 1, 2006, through July 31, 2007:

Producer/Exporter	Margin (percent)
King Pac (aka King Pak)	122.88
Master Packaging	122.88
NPG	32.67
Poly Plast	8.94

Assessment Rates

Upon issuance of these final results, the Department will determine, and CBP shall assess, antidumping duties on all appropriate entries. The Department intends to issue assessment instructions to CBP 15 days after the date of publication of these final results of review.

We calculated importer/customer–specific duty–assessment amounts with respect to export–price sales by NPG and Poly Plast in the following manner. We divided the total dumping margins (calculated as the difference between normal value and the export price) for each exporter's importer or customer by the total number of units the exporter sold to that importer or customer. We will direct CBP to assess the resulting per–unit dollar amount against each unit of merchandise on each of that importer's or customer's entries during the review period. See 19 CFR 351.212(b)(1). Where the assessment amount is above *de minimis*, we will instruct CBP to assess duties on all entries of subject merchandise by that importer or customer.

The Department clarified its ''automatic assessment'' regulation on May 6, 2003. *See Antidumping and Countervailing Duty Proceedings: Assessment of Antidumping Duties*, 68 FR 23954 (May 6, 2003) (*Assessment–Policy Notice*). This clarification will apply to entries of subject merchandise during the period of review produced by companies included in these final results of review for which the reviewed companies did not know that the merchandise they sold to an intermediary (*e.g.*, a reseller, trading company, or exporter) was destined for the United States. In such instances, we will instruct CBP to liquidate unreviewed entries at the all–others rate if there is no rate for the intermediary involved in the transaction. *See Assessment–Policy Notice* for a full discussion of this clarification.

Because we are relying on total adverse facts available to establish the dumping margins for King Pac and Master Packaging, we will instruct CBP to apply a dumping margin of 122.88 percent to all entries of subject merchandise produced and/or exported by these companies.

Cash–Deposit Requirements

The following deposit requirements will be effective upon publication of this notice of final results of administrative review for all shipments of the subject merchandise entered, or withdrawn from warehouse, for consumption on or after the date of publication, consistent with section 751(a)(1) of the Act: (1) the cash–deposit rates for the reviewed companies will be the rates shown above; (2) for previously investigated or reviewed companies not listed above, the cash–deposit rate will continue to be the company–specific rate published for the most recent period; (3) if the exporter is not a firm covered in this or a previous review or the original less–than-fair–value (LTFV) investigation but the manufacturer is, the cash–deposit rate will be the rate established for the most recent period for the manufacturer of the merchandise; (4) the cash–deposit rate for all other manufacturers or exporters will continue to be 2.80 percent, the all–others rate from the amended final determination of the LTFV investigation published on July 15, 2004. *See Notice of Amended Final Determination of Sales at Less Than Fair Value: Polyethylene Retail Carrier Bags From Thailand*, 69 FR 42419 (July 15, 2004).

These deposit requirements shall remain in effect until further notice.

Notification Requirements

This notice serves as a reminder to importers of their responsibility under 19 CFR 351.402(f) to file a certificate regarding the reimbursement of antidumping duties prior to liquidation of the relevant entries during this review period. Failure to comply with this requirement could result in the Department's presumption that reimbursement of antidumping duties occurred and the subsequent assessment of doubled antidumping duties. *See id.*

This notice also serves as a reminder to parties subject to administrative protective order (APO) of their responsibility concerning the disposition of proprietary information disclosed under APO in accordance with 19 CFR 351.305(a)(3). Timely notification of the return or destruction of APO materials or conversion to judicial protective order is hereby requested. Failure to comply with the regulations and the terms of an APO is a sanctionable violation.We are issuing and publishing these results in accordance with sections 751(a)(1) and 777(i) of the Act.

Dated: January 7, 2009.

Ronald K. Lorentzen,

Acting Assistant Secretary for Import Administration.

Appendix

1. Adverse Facts Available
2. Unreported Sales by Poly Plast

[FR Doc. E9–634 Filed 1–14–09; 8:45 am]

BILLING CODE 3510–DS–S

DEPARTMENT OF COMMERCE

International Trade Administration

[C–580–818]

Corrosion–Resistant Carbon Steel Flat Products from the Republic of Korea: Final Results of Countervailing Duty Administrative Review

AGENCY: Import Administration, International Trade Administration, Department of Commerce.

SUMMARY: On September 9, 2008, the U.S. Department of Commerce (''the Department'') published in the **Federal Register** its preliminary results of the administrative review of the countervailing duty (''CVD'') order on corrosion–resistant carbon steel flat products (''CORE'') from the Republic of Korea (''Korea'') for the period of review

(''POR'') January 1, 2006, through December 31, 2006. *See Corrosion–Resistant Carbon Steel Flat Products From the Republic of Korea: Preliminary Results of Countervailing Duty Administrative Review*. 73 FR 52315 (September 9, 2008) (''*Preliminary Results*''). We preliminarily found that Pohang Iron and Steel Co. Ltd. (''POSCO'') and Dongbu Steel Co., Ltd. (''Dongbu'') received de minimis countervailable subsidies during the POR. We received comments on our preliminary results from POSCO, a respondent company. The final results are listed in the section ''Final Results of Review'' below.

EFFECTIVE DATE: January 15, 2009.

FOR FURTHER INFORMATION CONTACT: Robert Copyak or Gayle Longest, AD/CVD Operations, Office 3, Import Administration, International Trade Administration, U.S. Department of Commerce, Room 4014, 14th Street and Constitution Ave., NW, Washington, DC 20230; telephone: (202) 482–2209 and (202) 482–3338, respectively.

SUPPLEMENTARY INFORMATION:

Background

On August 17, 1993, the Department published in the **Federal Register** the CVD order on CORE from Korea. *See Countervailing Duty Orders and Amendments of Final Affirmative Countervailing Duty Determinations: Certain Steel Products from Korea*, 58 FR 43752 (August 17, 1993). On September 9, 2008, the Department published in the **Federal Register** its preliminary results of the administrative review of this order for the period January 1, 2006, through December 31, 2006. *See Preliminary Results*, 73 FR 52315. In accordance with 19 CFR 351.213(b), this administrative review covers POSCO and Dongbu, producers and exporters of subject merchandise.

In the *Preliminary Results*, we invited interested parties to submit briefs or request a hearing. We received comments from POSCO, a respondent. We received no comments from United States Steel Corporation and Nucor Corporation, (''petitioners''), or Dongbu. The Department did not conduct a hearing in this review because none was requested.

Scope of Order

Products covered by this order are certain corrosion–resistant carbon steel flat products from Korea. These products include flat–rolled carbon steel products, of rectangular shape, either clad, plated, or coated with corrosion–resistant metals such as zinc, aluminum, or zinc-, aluminum-, nickel- or iron–based alloys, whether or not corrugated or painted, varnished or coated with plastics or other nonmetallic substances in addition to the metallic coating, in coils (whether or not in successively superimposed layers) and of a width of 0.5 inch or greater, or in straight lengths which, if of a thickness less than 4.75 millimeters, are of a width of 0.5 inch or greater and which measures at least 10 times the thickness or if of a thickness of 4.75 millimeters or more are of a width which exceeds 150 millimeters and measures at least twice the thickness. The merchandise subject to this order is currently classifiable in the Harmonized Tariff Schedule of the United States (HTSUS) at subheadings: 7210.30.0000, 7210.31.0000, 7210.39.0000, 7210.41.0000, 7210.49.0030, 7210.49.0090, 7210.60.0000, 7210.61.0000, 7210.70.6030, 7210.70.6060, 7210.70.6090, 7210.90.1000, 7210.90.6000, 7210.90.9000, 7212.20.0000, 7212.21.0000, 7212.29.0000, 7212.30.1030, 7212.30.1090, 7212.30.3000, 7212.30.5000, 7212.40.1000, 7212.40.5000, 7212.50.0000, 7212.60.0000, 7215.90.1000, 7215.9030, 7215.90.5000, 7217.12.1000, 7217.13.1000, 7217.19.1000, 7217.19.5000, 7217.20.1500, 7217.22.5000, 7217.23.5000, 7217.29.1000, 7217.29.5000, 7217.30.15.0000, 7217.32.5000, 7217.33.5000, 7217.39.1000, 7217.39.5000, 7217.90.1000 and 7217.90.5000. Although the HTSUS subheadings are provided for convenience and customs purposes, the Department's written description of the merchandise is dispositive.

Period of Review

The POR for which we are measuring subsidies is from January 1, 2006, through December 31, 2006.

Analysis of Comments

On October 9, 2008, POSCO filed comments. Neither Dongbu nor petitioners filed a case brief or a rebuttal brief. All issues in POSCO's case brief are addressed in the accompanying Issues and Decision Memorandum for the Countervailing Duty Administrative Review on Corrosion–Resistant carbon Steel Flat Products from Korea (''Decision Memorandum''), issued concurrently and hereby adopted by this notice. A listing of the issues that parties raised and to which we have responded is attached to this notice as Appendix I. Parties can find a complete discussion of the issues raised in this review and the corresponding recommendations in this public memorandum, which is on file in the Central Records Unit (''CRU''), Room 1117 of the main Commerce building. In addition, a complete version of the Decision Memorandum, can be accessed directly on the World Wide Web at http://ia.ita.doc.gov. The paper copy and the electronic version of the Decision Memorandum are identical in content.

Final Results of Review

After reviewing POSCO's comments, we have not changed our findings from the *Preliminary Results* as explained in our Decision Memorandum. Consistent with the *Preliminary Results*, we find that POSCO and Dongbu received *de minimis* countervailable subsidies during the POR at the rates below:

Company	Net Subsidy Rate
Pohang Iron and Steel Co. Ltd. (POSCO)	0.09 percent ad valorem (de minimis)
Dongbu Steel Co. Ltd. (Dongbu)	0.22 percent ad valorem (de minimis)

Assessment Rates/Cash Deposits

The Department intends to issue assessment instructions to U.S. Customs and Border Protection (''CBP'') 15 days after the date of publication of these final results of review to liquidate shipments of subject merchandise by POSCO and Dongbu entered, or withdrawn from warehouse, for consumption on or after January 1, 2006, through December 31, 2006, without regard to countervailing duties. We will also instruct CBP not to collect cash deposits of estimated countervailing duties on shipments of the subject merchandise produced by POSCO and Dongbu, entered, or withdrawn from warehouse, for consumption on or after the date of publication of these final results of review.

For all non–reviewed companies, the Department has instructed CBP to assess countervailing duties at the cash deposit rates in effect at the time of entry, for entries between January 1, 2006, and December 31, 2006. The cash deposit rates for all companies not covered by this review are not changed by the results of this review.

Return or Destruction of Proprietary Information

This notice serves as a reminder to parties subject to administrative protective order (''APO'') of their responsibility concerning the disposition of proprietary information

disclosed under APO in accordance with 19 CFR 351.305(a)(3). Timely written notification of return or destruction of APO materials or conversion to judicial protective order is hereby requested. Failure to comply with the regulations and the terms of an APO is a sanctionable violation.

We are issuing and publishing these results in accordance with sections 751(a)(1) and 777(i)(1) of the Act and 19 CFR 351.221(b)(4).

Dated: January 7, 2009.

Ronald K. Lorentzen,

Acting Assistant Secretary for Import Administration.

Appendix I - Issues and Decision Memorandum

Company–Specific Issue

Whether Certain Research and Development (''R&D'') Grants Under the Industrial Development Act (''IDA'') Are Tied to Non–Subject Merchandise

[FR Doc. E9–633 Filed 1–14–09; 8:45 am]

BILLING CODE 3510–DS–S

DEPARTMENT OF DEFENSE

Department of the Navy

Notice of Intent To Prepare an Environmental Impact Statement for Basing the U.S. Marine Corps Joint Strike Fighter F–35B on the East Coast

AGENCY: Department of the Navy, DoD.

ACTION: Notice.

SUMMARY: Pursuant to Section (102)(2)(c) of the National Environmental Policy Act (NEPA) of 1969, as implemented by the Council on Environmental Quality Regulations (40 Code of Federal Regulations [CFR] Parts 1500–1508), the Department of the Navy NEPA regulations (32 CFR Part 775), and Marine Corps NEPA directives (Marine Corps Order P5090.2A, change 1), the Department of the Navy intends to prepare an Environmental Impact Statement (EIS) and conduct public scoping meetings for the proposed basing and operation of 13 Joint Strike Fighter (JSF) F–35B squadrons at Marine Corps Air Station (MCAS) Beaufort, in Beaufort, South Carolina and MCAS Cherry Point in Havelock, North Carolina.

DATES: Public scoping meetings, following an informal open house format, will be held from 4 p.m. to 7 p.m. on the dates indicated below, at the following locations:

(1) February 3, 2009, Holiday Inn Resort, Conference Room, 2225 Boundary St., Beaufort, SC.

(2) February 4, 2009, Senior Center, 15 Thornton Drive, NE., Ludowici, GA.

(3) February 5, 2009, McIntosh County Middle School, Cafeteria, 500 Green Street, Darien, GA.

(4) February 10, 2009, Havelock Tourist and Event Center, 201 Tourist Center Drive, Havelock, NC.

(5) February 11, 2009, Emerald Isle Community Center, 7500 Emerald Isle Dr., Emerald Isle, NC.

(6) February 12, 2009, Fred A. Anderson Elementary School, Cafeteria, 507 Anderson Dr., Bayboro, NC.

Federal, state, and local agencies, and interested parties and persons are encouraged to attend any of the open house scoping meetings. At these open houses, proposal-related displays and material will be available for public review; Marine Corps and Navy staff will be present to address questions; and the public will have an opportunity to submit written comments on environmental concerns that should be addressed in the EIS.

ADDRESSES: All are encouraged to provide comments on the proposed action and alternatives at any public scoping open houses and anytime during the 30-day scoping comment period, which ends February 16, 2009. There are three ways in which comments can be submitted: (1) By attending one of the public scoping open houses, (2) by e-mail using the project public Web site at *http://www.usmcJSFeast.com* or (3) by mail. All written comments on the scope of the EIS should be submitted and postmarked no later than February 16, 2009. Comments submitted by mail should be sent to: USMC F–35B East Coast Stationing EIS, P.O. Box 56488, Jacksonville, FL 32241–6488.

FOR FURTHER INFORMATION CONTACT: The F–35B EIS Project Manager at 757–444–1126. Please submit requests for special assistance, sign language interpretation for the hearing impaired, or other auxiliary aids needed at the public meeting to the F–35B EIS Project Manager by January 28, 2009.

SUPPLEMENTARY INFORMATION: The Marine Corps variant of the JSF, the F–35B, is a short take-off/vertical landing (STOVL), multi-role fighter aircraft whose primary emphasis is air-to-ground combat. The aircraft is designed to replace existing fleets of F–18 A/C/D Hornets (strike fighter), AV–8B Harriers (attack), and the EA–6B Prowler (electronic warfare) aircraft. The F–35B East Coast basing proposal would take approximately 11 years to implement and would begin in 2012. The proposal would base up to 216 aircraft (*i.e.*, 10 active-duty and 1 reserve squadron of up to 16 aircraft each and 2 Pilot Training Center (PTC) squadrons at 20 aircraft each) at MCAS Beaufort and MCAS Cherry Point. Facility construction and modifications would occur prior to and continue throughout F–35B squadron arrivals; the F–35B would operate within existing airspace and at training ranges currently used by Marine Corps Hornet, Harrier, and Prowler aircraft.

Proposed Action

The proposed action would base and operate a total of 13 F–35B (the Marine Corps variant of the JSF) squadrons at both MCAS Beaufort and MCAS Cherry Point. This F–35B is a next generation, stealth, supersonic, multi-role fighter aircraft that will replace aging Marine Corps fleets of F–18 A/C/D Hornets, AV–8B Harriers, and EA–6B Prowlers in the 2nd and 4th Marine Air Wings. Specifically, the squadrons would include up to 10 F–35B active-duty squadrons of up to 16 aircraft per squadron, 1 reserve F–35B squadron comprising up to 16 aircraft, and 2 PTC F–35B squadrons composed of up to 20 aircraft per squadron.

Purpose and Need

To meet any crisis or conflict that may arise both now and into the future, Marine Corps Aviation must be manned, trained, and equipped to conduct world-wide air combat operations. For this reason, technological superiority in its air fleet is an essential requirement. The purpose of the proposed action, therefore, is to provide state-of-the art F–35B aircraft to Marine Corps fleets by replacing aging aircraft inventories. The basing action would provide both the facilities and functions to support and maintain these new aircraft as well as the airfields, airspace, and ranges to train air crews in these next-generation aircraft.

Preliminary Alternatives

The Marine Corps developed a range of reasonable basing alternatives in a three-tiered alternatives development process. The process applied the purpose and need to identify potential sites that could maximize JSF integration into existing Marine Air Ground Task Force organizations, maximize utilization of existing infrastructure, and provide efficient use of existing ranges. The alternative development process identified five preliminary basing alternatives. These alternatives distribute differing combinations of F–35B active-duty, reserve, and PTC squadrons at MCAS Beaufort and MCAS Cherry Point. The basing alternatives include:

• No-action alternative, where F–35B aircraft would not replace F–18A/C/D, AV–8B, and EA–6B squadrons at MCAS Beaufort and MCAS Cherry Point. The no-action alternative, while required by NEPA from which to measure potential impacts, would not meet the purpose and need of the proposed action and would prevent the Marine Corps from fulfilling its assigned combat missions.

• Alternative 1 would base three F–35B squadrons and the PTC (with two squadrons) at MCAS Beaufort; MCAS Cherry point would receive eight squadrons.

• Alternative 2 would base the PTC (with two squadrons) at MCAS Beaufort; MCAS Cherry Point would receive eleven squadrons.

• Alternative 3 would base eight squadrons at MCAS Beaufort; MCAS Cherry Point would receive three squadrons and the PTC (with two squadrons).

• Alternative 4 would base eleven squadrons at MCAS Beaufort; MCAS Cherry Point would receive the PTC (with two squadrons).

• Alternative 5 would base two F–35B squadrons and the PTC (with two squadrons) at MCAS Beaufort; MCAS Cherry point would receive nine squadrons.

Environmental Issues and Resources To Be Examined

The EIS will evaluate the potential environmental effects associated with each of the above alternatives. Issues to be addressed may include, but are not limited to, biological resources, historic and archaeological resources, geology and soils, hydrology, water quality, air quality, noise, safety, hazardous materials and waste, visual resources, socioeconomics, and environmental justice. Relevant and reasonable measures that could avoid or mitigate environmental effects will also be analyzed.

Additionally, the Marine Corps will undertake any consultations required by the Endangered Species Act, Clean Water Act, National Historic Preservation Act, and any other applicable law or regulation.

EIS Schedule

This Notice of Intent is the first phase of the EIS process and announces the 30-day public comment period to identify community concerns and local issues that should be addressed in the EIS. The next phase occurs when the Department of the Navy publishes a Notice of Availability (NOA) in the **Federal Register** and local media to publicly release the Draft EIS. A 45-day public comment period for the Draft EIS will commence upon publication of the NOA in the **Federal Register** . The Marine Corps will consider and respond to all comments received on the Draft EIS when preparing the Final EIS. The Department of the Navy intends to issue the Final EIS no later than October 2010, at which time an NOA will be published in the **Federal Register** and local media. A Record of Decision will be issued 30 days following publication of the Final EIS.

Dated: January 12, 2009.

A.M. Vallandingham,

Lieutenant Commander, Judge Advocate Generals Corps, U.S. Navy, Federal Register Liaison Officer.

[FR Doc. E9–834 Filed 1–14–09; 8:45 am]

BILLING CODE 3810–FF–P

DEPARTMENT OF DEFENSE

Department of the Navy

Notice of Intent To Prepare an Environmental Impact Statement for basing the U.S. Marine Corps Joint Strike Fighter F–35B on the West Coast

AGENCY: Department of the Navy, DoD.

ACTION: Notice.

SUMMARY: Pursuant to Section (102)(2)(c) of the National Environmental Policy Act (NEPA) of 1969, as implemented by the Council on Environmental Quality Regulations (40 Code of Federal Regulations [CFR] Parts 1500–1508), the Department of the Navy NEPA regulations (32 CFR Part 775), and Marine Corps NEPA directives (Marine Corps Order P5090.2A, change 1), the Department of the Navy intends to prepare an Environmental Impact Statement (EIS) and conduct public scoping meetings for the proposed basing and operation of 12 Joint Strike Fighter (JSF) F–35B squadrons at Marine Corps Air Station (MCAS) Miramar, in San Diego, California and MCAS Yuma in Yuma, Arizona.

The Department of the Navy is initiating the public scoping process to identify community concerns and local issues that should be addressed in the EIS. Federal, state and local agencies and interested parties are encouraged to provide written comments to identify specific issue or topics of environmental concern that should be addressed in the EIS. The Department of the Navy will consider these comments in determining the scope of the EIS.

DATES: Public scoping open houses will be held from 5 p.m. to 9 p.m. on the dates indicated below, at the following locations:

(1) February 3, 2009, Miramar, Mira Mesa Branch Library, 8405 New Salem St., San Diego, CA.

(2) February 4, 2009, Gila Ridge High School, 7151 E 24th St., Yuma, AZ.

Federal, state, and local agencies, and interested parties are encouraged to attend any of the open house scoping meetings. At these open houses, proposal-related displays and material will be available for public review; Marine Corps and Navy staff will be present to address questions; and the public will have an opportunity to submit written comments on environmental concerns that should be addressed in the EIS.

ADDRESSES: All are encouraged to provide written comments on the proposed action and alternatives at any public scoping open houses and anytime during the scoping comment period, which ends February TBD, 2009. There are three ways to submit written comments: (1) By attending one of the public scoping open houses, (2) by e-mail using the project public Web site at *http://www.usmcJSFwest.com* or (3) by mail. All written comments on the scope of the EIS should be submitted and postmarked no later than February TBD, 2009. Comments submitted by mail should be sent to: JSF West Coast EIS Project Manager, NAVFAC SOUTHWEST, 1220 Pacific Hwy, San Diego, CA 93132.

FOR FURTHER INFORMATION CONTACT: F–35B West Coast EIS Project Manager at (619) 532–4742. Please submit requests for special assistance, sign language interpretation for the hearing impaired, or other auxiliary aids needed at the public meeting to the F–35B West Coast EIS Project Manager by January 6, 2009.

SUPPLEMENTARY INFORMATION: The Marine Corps variant of the JSF, the F–35B, is a short take-off/vertical landing (STOVL), multi-role fighter aircraft whose primary emphasis is air-to-ground combat. The aircraft is designed to replace existing fleets of F–18 A/C/D Hornets (strike fighter) and AV–8B Harriers (attack). It is also intended to adopt the electronic warfare mission of the EA–6B Prowler aircraft. The F–35B West Coast basing proposal would take approximately 12 years to implement and would begin in 2012. The proposal would base up to 182 aircraft (i.e., 10 active-duty and 1 reserve squadron of up to 16 aircraft each and 1 OT& E squadron with 6 aircraft) at MCAS Miramar and MCAS Yuma. Facility construction and modifications would occur prior to and continue throughout F–35B squadron arrivals; the F–35B would operate within existing airspace and at training ranges currently used by

Marine Corps Hornet and Harrier aircraft.

Proposed Action

The proposed action would base and operate a total of 12 F–35B (the Marine Corps variant of the JSF) squadrons at MCAS Miramar and MCAS Yuma. The decision would include the basing of 10 active-duty squadrons, 1 Reserve squadron, and 1 Operational Testing and Evaluation (OT&E) squadron. The F–35B is a next generation, stealth, supersonic, multi-role fighter aircraft that will replace aging Marine Corps fleets of F–18 A/C/D Hornets and AV–8B Harriers in the 3rd and 4th Marine Air Wings.

Purpose and Need

To meet any crisis or conflict that may arise both now and into the future, Marine Corps Aviation must be manned, trained, and equipped to conduct world-wide air combat operations. For this reason, technological superiority in its air fleet is an essential requirement. The purpose of the proposed action, therefore, is to provide state-of-the art F–35B aircraft to Marine Corps fleets by replacing aging aircraft inventories. The basing action would provide both the facilities and functions to support and maintain these new aircraft as well as the airfields, airspace, and ranges to train air crews in these next-generation aircraft. The EIS may develop the need for new missions on the Barry M. Goldwater range and/or identify the need and location for additional special use airspace to support JSF training functions.

Preliminary Alternatives

The Marine Corps developed a range of reasonable basing alternatives in a three-tiered alternatives development process. The process applied the purpose and need to identify potential sites that could maximize JSF integration into existing Marine Air Ground Task Force organizations, maximize utilization of existing infrastructure and provide efficient use of existing ranges. The alternative development process identified five preliminary basing alternatives. These alternatives distribute differing combinations of the F–35B active-duty, reserve, and OT&E squadrons between MCAS Miramar and MCAS Yuma. The basing alternatives include:

- No-action alternative, where F–35B aircraft would not replace F–18A/C/D and AV–8B squadrons at MCAS Miramar and MCAS Yuma. The no-action alternative, while required by NEPA in order to measure potential impacts, would not meet the purpose and need of the proposed action and would prevent the Marine Corps from fulfilling its assigned combat missions.
- *Alternative 1* would base six squadrons at MCAS Miramar, and five squadrons and one OT&E squadron at MCAS Yuma.
- *Alternative 2* would base four squadrons at MCAS Miramar, and seven squadrons and one OT&E squadron at MCAS Yuma.
- *Alternative 3* would base seven squadrons and one OT&E squadron at MCAS Miramar, and four squadrons at MCAS Yuma.
- *Alternative 4* would base one squadron and one OT&E squadron at MCAS Miramar, and ten squadrons at MCAS Yuma.
- *Alternative 5* would base ten squadrons at MCAS Miramar, and one squadron and one OT&E squadron at MCAS Yuma.

Environmental Issues and Resources To Be Examined

The EIS will evaluate the potential environmental effects associated with each of the above alternatives. Issues to be addressed include, but are not limited to, biological resources, historic and archaeological resources, geology and soils, hydrology, water quality, air quality, noise, safety, hazardous materials and waste, visual resources, socioeconomics, and environmental justice. Relevant and reasonable measures that could avoid or mitigate environmental effects will also be analyzed.

Additionally, the Marine Corps will undertake any consultations required by the Endangered Species Act, Clean Water Act, National Historic Preservation Act, and any other applicable law or regulation.

EIS Schedule

This Notice of Intent is the first phase of the EIS process and announces the beginning of the public comment period to identify community concerns and local issues that should be addressed in the EIS. The next phase occurs when the Department of the Navy publishes a Notice of Availability (NOA) in the **Federal Register** and local media to publicly release the Draft EIS. A 45-day public comment period for the Draft EIS will start upon publication of the NOA in the **Federal Register**. The Department of the Navy will consider and respond to all public comments received on the Draft EIS when preparing for the Final EIS. The Department of the Navy intends to issue the Final EIS no later than October 2010, at which time an NOA will be published in the **Federal Register** and local media. A 30-day waiting period will start upon publication of the NOA for the Final EIS in the **Federal Register**. At the end of this period, the Assistant Secretary of the Navy will issue a Record of Decision.

Dated: January 12, 2009.

A.M. Vallandingham,

Lieutenant Commander, Judge Advocate Generals Corps, U.S. Navy, Federal Register Liaison Officer.

[FR Doc. E9–835 Filed 1–14–09; 8:45 am]

BILLING CODE 3810–FF–P

DEPARTMENT OF DEFENSE

Department of the Navy

Partially Closed Meeting of the Secretary of the Navy Advisory Panel

AGENCY: Department of the Navy, DoD.

ACTION: Notice of Partially Closed Meeting.

SUMMARY: The Secretary of the Navy (SECNAV) Advisory Panel will meet to discuss recommendations for Military Program Managers in the Department of the Navy and strategies related to a classified topic.

DATES: The meeting will be held on February 6, 2009 from 8:45 a.m. to 2 p.m.

The morning sessions from 8:45 a.m. to 10:30 a.m. on February 6, 2009, will be open to the public, and the afternoon sessions from 10:45 a.m. to 2 p.m. on February 6, 2009, will be closed to the public.

ADDRESSES: The meeting will be held in Room 1E840, in the Pentagon.

Access: Public access is limited due to the Pentagon Security requirements. Any individual wishing to attend will need to contact LCDR Miriam Smyth at (703) 695–3573 or CDR Cary Knox at (703) 693–0463 no later than January 30, 2009. Members of the public who do not have Pentagon access will be required provide Name, Date of Birth and Social Security number by January 30, 2009 in order to obtain a visitor badge. Public transportation is recommended as public parking is not available. Members of the public wishing to attend this event must enter through the Pentagon's Metro Entrance between 8:45 a.m. and 9 a.m. At this entrance, they will be required to present two forms of identification in order to receive a visitors badge and meet their escort. Members obtaining visitor badges will then be escorted to Room 1E840 to attend the open sessions of the Advisory Panel. Members of the Public shall remain with designated escorts at all times while on the Pentagon

Reservation. Members of the public will be escorted back to the Pentagon Metro Entrance at 10:30 a.m.

FOR FURTHER INFORMATION CONTACT: Colonel Caroline Simkins-Mullins, SECNAV Advisory Panel, Office of Program and Process Assessment 1000 Navy Pentagon, Washington, DC 20350, (703) 697–9154.

SUPPLEMENTARY INFORMATION: Pursuant to the provisions of the Federal Advisory Committee Act, as amended (5 U.S.C. App.), the matters of these classified sessions constitute classified information that is specifically authorized by Executive Order to be kept secret in the interest of national defense and are, in fact, properly classified pursuant to such Executive Order. Accordingly, the Secretary of the Navy has determined in writing that the public interest requires that portions of this meeting be closed to the public because they will be concerned with matters listed in section 552b(c)(1) of Title 5, United States Code.

Individuals or interested groups may submit written statements for consideration by the Secretary of the Navy Advisory Panel at any time or in response to the agenda of a scheduled meeting. All requests must be submitted to the Designated Federal Officer at the address detailed below.

If the written statement is in response to the agenda mentioned in this meeting notice then the statement, if it is to be considered by the Panel for this meeting, must be received at least five days prior to the meeting in question.

The Designated Federal Officer will review all timely submissions with the Secretary of the Navy Advisory Panel Chairperson, and ensure they are provided to members of the Secretary of the Navy Advisory Panel before the meeting that is the subject of this notice.

To contact the Designated Federal Officer, write to: Designated Federal Officer, SECNAV Advisory Panel, Office of Program and Process Assessment 1000 Navy Pentagon, Washington, DC 20350, (703) 697–9154.

Dated: January 12, 2009.

T.M. Cruz,

Lieutenant Commander, Judge Advocate General's Corps, U.S. Navy, Alternate Federal Register Liaison Officer.

[FR Doc. E9–727 Filed 1–14–09; 8:45 am]

BILLING CODE 3810–FF–P

DEPARTMENT OF EDUCATION

Submission for OMB Review; Comment Request

AGENCY: Department of Education.

SUMMARY: The Director, Information Collection Clearance Division, Regulatory Information Management Services, Office of Management invites comments on the submission for OMB review as required by the Paperwork Reduction Act of 1995.

DATES: Interested persons are invited to submit comments on or before February 17, 2009.

ADDRESSES: Written comments should be addressed to the Office of Information and Regulatory Affairs, Attention: Education Desk Officer, Office of Management and Budget, 725 17th Street, NW., Room 10222, New Executive Office Building, Washington, DC 20503 or faxed to (202) 395–6974.

SUPPLEMENTARY INFORMATION: Section 3506 of the Paperwork Reduction Act of 1995 (44 U.S.C. Chapter 35) requires that the Office of Management and Budget (OMB) provide interested Federal agencies and the public an early opportunity to comment on information collection requests. OMB may amend or waive the requirement for public consultation to the extent that public participation in the approval process would defeat the purpose of the information collection, violate State or Federal law, or substantially interfere with any agency's ability to perform its statutory obligations. The IC Clearance Official, Regulatory Information Management Services, Office of Management, publishes that notice containing proposed information collection requests prior to submission of these requests to OMB. Each proposed information collection, grouped by office, contains the following: (1) Type of review requested, e.g. new, revision, extension, existing or reinstatement; (2) Title; (3) Summary of the collection; (4) Description of the need for, and proposed use of, the information; (5) Respondents and frequency of collection; and (6) Reporting and/or Recordkeeping burden. OMB invites public comment.

Dated: January 12, 2009.

Angela C. Arrington,

IC Clearance Official, Regulatory Information Management Services, Office of Management.

Office of Innovation and Improvement

Type of Review: New.

Title: Transition to Teaching Evaluation.

Frequency: Other-At the end of the third year and end of final year of the TTT grant.

Affected Public: Not-for-profit institutions; State, Local, or Tribal Gov't, SEAs or LEAs.

Reporting and Recordkeeping Hour Burden:

Responses: 45.

Burden Hours: 45.

Abstract: This is a request for approval to collect information from Transition to Teaching (TTT) grantees that will be used to describe the extent to which local education agencies that received TTT grant funds have met the goals relating to teacher recruitment and retention described in their application. TTT grantees are funded for a period of five years. Currently, grantees are required by statute to submit an interim project evaluation to ED at the end of the third project year and a final project evaluation at the project's end. In turn, the TTT program is required to prepare and submit to the Secretary and to Congress interim and final program evaluations containing the results of these grantee project evaluation reports. An analysis of these reports has provided some data on grantee activities, but the poor quality of some reports and missing or incomplete data in others have made it difficult to aggregate data across grantees in order to accurately describe to Congress the extent of program implementation. This proposed data collection would allow ED to gather data on a common set of indicators across grantees to describe program implementation, and to investigate the conditions under which projects have been successful at recruiting, preparing and retaining highly qualified teachers in high-need schools in high-need LEAs.

Requests for copies of the information collection submission for OMB review may be accessed from *http://edicsweb.ed.gov,* by selecting the ''Browse Pending Collections'' link and by clicking on link number 3908. When you access the information collection, click on ''Download Attachments'' to view. Written requests for information should be addressed to U.S. Department of Education, 400 Maryland Avenue, SW., LBJ, Washington, DC 20202–4537. Requests may also be electronically mailed to the Internet address *ICDocketMgr@ed.gov* or faxed to 202–401–0920. Please specify the complete title of the information collection when making your request.

Comments regarding burden and/or the collection activity requirements should be electronically mailed to *ICDocketMgr@ed.gov.* Individuals who use a telecommunications device for the deaf (TDD) may call the Federal Information Relay Service (FIRS) at 1–800–877–8339.

[FR Doc. E9–797 Filed 1–14–09; 8:45 am]

BILLING CODE 4000–01–P

DEPARTMENT OF EDUCATION

Submission for OMB Review; Comment Request

AGENCY: Department of Education.

SUMMARY: The Director, Information Collection Clearance Division, Regulatory Information Management Services, Office of Management, invites comments on the submission for OMB review as required by the Paperwork Reduction Act of 1995.

DATES: Interested persons are invited to submit comments on or before February 17, 2009.

ADDRESSES: Written comments should be addressed to the Office of Information and Regulatory Affairs, *Attention:* Education Desk Officer, Office of Management and Budget, 725 17th Street, NW., Room 10222, New Executive Office Building, Washington, DC 20503 or faxed to (202) 395–6974.

SUPPLEMENTARY INFORMATION: Section 3506 of the Paperwork Reduction Act of 1995 (44 U.S.C. Chapter 35) requires that the Office of Management and Budget (OMB) provide interested Federal agencies and the public an early opportunity to comment on information collection requests. OMB may amend or waive the requirement for public consultation to the extent that public participation in the approval process would defeat the purpose of the information collection, violate State or Federal law, or substantially interfere with any agency's ability to perform its statutory obligations. The IC Clearance Official, Regulatory Information Management Services, Office of Management, publishes that notice containing proposed information collection requests prior to submission of these requests to OMB. Each proposed information collection, grouped by office, contains the following: (1) Type of review requested, e.g. new, revision, extension, existing or reinstatement; (2) Title; (3) Summary of the collection; (4) Description of the need for, and proposed use of, the information; (5) Respondents and frequency of collection; and (6) Reporting and/or Recordkeeping burden. OMB invites public comment.

Dated: January 12, 2009.

Angela C. Arrington,

IC Clearance Official, Regulatory Information Management Services, Office of Management.

Institute of Education Sciences

Type of Review: Revision.

Title: Early Childhood Longitudinal Study Kindergarten Class of 2010–2011.

Frequency: Annually.

Affected Public: Individuals or household.

Reporting and Recordkeeping Hour Burden:

Responses: 164,869.

Burden Hours: 101,055.

Abstract: The ECLS–K 2010–2011 is the follow-up study to the ECLS–K. It is a longitudinal study that will follow children from kindergarten through fifth grade to measure child development, school readiness and early school experiences. It will include cognitive assessments of children on an annual basis, parent interviews, and surveys of teachers, school administrators and the primary care provider.

Requests for copies of the information collection submission for OMB review may be accessed from *http://edicsweb.ed.gov,* by selecting the ''Browse Pending Collections'' link and by clicking on link number 3872. When you access the information collection, click on ''Download Attachments'' to view. Written requests for information should be addressed to U.S. Department of Education, 400 Maryland Avenue, SW., LBJ, Washington, DC 20202–4537. Requests may also be electronically mailed to the Internet address *ICDocketMgr@ed.gov* or faxed to (202) 401–0920. Please specify the complete title of the information collection when making your request.

Comments regarding burden and/or the collection activity requirements should be electronically mailed to *ICDocketMgr@ed.gov.* Individuals who use a telecommunications device for the deaf (TDD) may call the Federal Information Relay Service (FIRS) at 1–800–877–8339.

[FR Doc. E9–805 Filed 1–14–09; 8:45 am]

BILLING CODE 4000–01–P

DEPARTMENT OF EDUCATION

DEPARTMENT OF THE TREASURY

OFFICE OF MANAGEMENT AND BUDGET

Federal Family Education Loan Program (FFELP)

AGENCY: Department of Education, Department of the Treasury, Office of Management and Budget.

ACTION: Notice of terms and conditions of additional purchase of loans under the Ensuring Continued Access to Student Loans Act of 2008.

SUMMARY: Under the authority of section 459A of the Higher Education Act of 1965, as amended (''HEA''), as enacted by the Ensuring Continued Access to Student Loans Act of 2008 (Pub. L. 110–227) and amended by Public Law 110–315 and Public Law 110–350, the Department of Education (''Department'') may purchase, or enter into forward commitments to purchase, Federal Family Education Loan Program (''FFELP'') loans made under sections 428 (subsidized Stafford loans), 428B (PLUS loans), or 428H (unsubsidized Stafford loans) of the HEA, on such terms as the Secretary of Education (''Secretary''), the Secretary of the Treasury, and the Director of the Office of Management and Budget (collectively, ''Secretaries and Director'') jointly determine are ''in the best interest of the United States'' and ''shall not result in any net cost to the Federal Government (including the cost of servicing the loans purchased).''

This notice establishes the terms and conditions that will govern certain loan purchases made under section 459A of the HEA, as extended by Public Law 110–350, including (a) purchases from an asset-backed commercial paper vehicle referred to as an ''ABCP Conduit'' or ''Conduit'' (''ABCP Conduit Program'') and (b) replication for the 2009–2010 academic year of the Loan Participation Purchase Program (''2009–2010 Participation Program'') and Loan Purchase Commitment Program (''2009–2010 Purchase Program'') (collectively, ''Programs'').

This notice also outlines the Department's methodology and factors that have been considered in evaluating the price at which the Department will purchase these additional FFELP loans; and describes how the use of those factors and methodology will ensure that the additional loan purchases do not result in any net cost to the Federal Government. The Secretaries and Director concur in the publication of this notice and have jointly determined that, based on the Department's analysis, the purchase of additional loans as described in this notice is in the best interest of the United States and shall not result in any net cost to the Federal Government (including the cost of servicing the loans purchased).

DATES: *Effective Date:* The terms and conditions governing the purchase of loans under the 2009–2010 Participation Program and Purchase Program, and the ABCP Conduit Program are effective January 16, 2009.

FOR FURTHER INFORMATION CONTACT: U.S. Department of Education, Office of Federal Student Aid, Union Center Plaza, 830 First Street, NE., room 111G3, Washington, DC 20202. Telephone: (202) 377–4401 or by e-mail: *ffel.agreementprocess@ed.gov.*

If you use a telecommunications device for the deaf (TDD), call the Federal Relay Service (FRS), toll free, at 1–800–877–8339. Individuals with disabilities can obtain this document in an accessible format (*e.g.* , braille, large print, audiotape, or computer diskette) on request to the office listed under **FOR FURTHER INFORMATION CONTACT**.

SUPPLEMENTARY INFORMATION:

Introduction

The Department's purchase of FFELP loans is intended primarily to ensure that students and parents continue to have access to FFELP loans for the remainder of the 2008–2009 academic year and for the 2009–2010 academic year.

The Department of Education first exercised its authority under section 459A of the HEA in July 2008, when the Secretaries and Director established the Participation Program and Purchase Program for eligible loans made for academic year 2008–2009.[1]

Under the Participation Program, the Department has purchased participation interests in eligible loans that are held by an eligible lender acting as a sponsor under a Master Participation Agreement. Under the Purchase Program, the Department has purchased eligible loans that are held by eligible lenders. To participate in either the Participation Program or the Purchase Program, a lender must enter into an agreement with the Department for that program.

Subsequent to the announcements of the Purchase Program and Participation Program in July, the Secretary of Education concluded that additional action was necessary to ensure students and parents have access to FFELP for the remainder of the 2008–2009 academic year. Specifically, the Secretaries and Director acknowledged the possibility that some lenders would not be able to obtain capital to make second disbursements of 2008–2009 academic year FFELP loans even for the short-term necessary before lenders can utilize the ABCP Conduit Program. To provide needed liquidity to support new lending, the Department, through the Short-term Purchase Program announced in December 2008, extended the offer to purchase loans to include eligible loans made for the 2007–2008 academic year. The Department at that time gave notice that it would purchase such loans beginning on or about December 1, 2008 and would continue purchasing them through February 28, 2009 or the date on which one or more conforming Asset-Backed Commercial Paper (ABCP) Conduits for purchasing FFELP loans become operational, whichever occurs earlier. Through the Short-term Purchase Program, the Department will expend up to $500 million to purchase eligible loans each week during this period, for a potential total aggregate amount of up to $6.5 billion.

The Secretaries and the Director believe that, although capital markets have improved, lenders may continue to have difficulty in obtaining funding to make loan commitments for the upcoming academic year, or to make subsequent disbursements on loans, without a commitment from the Department to purchase those loans. To address this need, the Secretaries and the Director have concluded that the Purchase Program and the Participation Program should be replicated for the 2009–2010 academic year. The Secretaries and the Director further conclude that the Department should enter into forward purchase commitments with one or more conforming ABCP Conduits that can purchase FFELP loans, and thereby provide additional liquidity to support new lending. An entity that wishes to establish an ABCP Conduit must submit such offers to the Department at *http://www.federalstudentaid.ed.gov/ffelp.*

Terms and Conditions

Pursuant to section 459A of the HEA, the Secretaries and Director establish the terms and conditions that will govern these additional purchase programs. The terms and conditions governing the replication of the Loan Purchase Program for academic year 2009–2010 (''2009–2010 Loan Purchase Commitment Program Terms and Conditions'') are attached as Appendix A to this notice; those governing the replication of the Participation Program for academic year 2009–2010 (''2009–2010 Loan Participation Program Terms and Conditions'') are attached as Appendix B to this notice, and those governing the ABCP Conduit Program are attached as Appendix C to this notice.

The 2009–2010 Purchase Program and 2009–2010 Participation Program will operate for the 2009–2010 academic year in substantially the same way as the Purchase Program and Participation Program did for the 2008–2009 academic year.

Under the ABCP Conduit Program, the Department will enter into forward purchase commitments to purchase FFELP loans (subsidized Stafford loans, unsubsidized Stafford loans, and PLUS loans) on which the lender made the first disbursement on or after October 1, 2003, but no later than June 30, 2009, fully disbursed no later than September 30, 2009, and conveyed to the Conduit no later than June 30, 2010. The Department will not agree to purchase FFELP Consolidation loans under this program.

In order to participate in the ABCP Conduit Program, a sponsoring entity must enter into a ''Put Agreement'' with the Department consistent with the terms and conditions stated in Appendix C. The Put Agreement will establish the nature of the relationship between the Department and the Conduit and Conduit Manager. The Department will agree to purchase loans from the Conduit upon demand as needed to support the issuance of commercial paper by the Conduit. The Conduit is expected to exercise the Put only after the Conduit has attempted to obtain funds to meet maturing commercial paper from other resources, including other financial institutions, and has either been unable to do so, or, if it has obtained such funding, is unable to issue new commercial paper sufficient to obtain funds to repay those borrowings.

As explained in detail in Appendix C, the Department will agree to purchase loans at either 97 percent or 100 percent of the total of the outstanding principal balance plus accrued but unpaid interest as of the purchase date, depending on the characteristics of the loan. The Conduit may purchase loans as defined in the Put Agreement and the attached terms and conditions for the ABCP Conduit Program in Appendix C. Loans purchased by the Conduit must have been selected from the seller's portfolio in a manner that assures the sale to the Conduit of loans is fairly representative of the seller's total portfolio of conduit eligible loans. In addition, a lender that sells the Conduit a loan owed by a particular borrower must also sell the Conduit all other eligible loans it holds for that particular borrower.

Under the 2009–2010 Purchase Program and 2009–2010 Participation Program, the Department will purchase loans or participation interests in loans that have ''eligible borrower benefits,'' which are borrower benefits previously deemed acceptable in the 2008–2009 programs (upfront fee reductions already consummated or interest reductions not exceeding .25 percent conditioned on borrower use of an automatic loan payment process).

[1] The Secretaries and Director announced the terms and conditions governing the Participation Program and the Purchase Program for academic year 2008–2009 in a notice published in the **Federal Register** on July 1, 2008 (73 FR 37422). Minor revisions to this notice were published in the **Federal Register** on July 17, 2008 (73 FR 41048).

However, under the ABCP Conduit Program, the Department will agree to purchase loans with a broader range of borrower benefits, as summarized in the terms and conditions for the ABCP Conduit Program in Appendix C to this notice. In addition, a list of those specific borrower benefits will be posted to the Department's Web site at *http://www.federalstudentaid.ed.gov/ffelp.*

While loans that have a direct payment to a borrower as a borrower benefit—rather than an interest or principal reduction—are eligible for inclusion in the Conduit, the Department will require the holder of the loan to make the payment to the borrower prior to sale to the Department, regardless of whether the borrower actually earned the benefit. The Department will also require the seller of the loan to establish a reserve for this purpose.

Outline of Methodology and Factors in Determining Prices for All Programs

In accordance with Public Law No. 110–227, Public Law 110–315, and Public Law 110–350, the goal in structuring the 2009–2010 Purchase Program, the 2009–2010 Participation Program, and the ABCP Conduit Program is to maximize student loan availability while ensuring loan purchases result in no net cost to the Federal Government. The Secretaries and Director described the basis for determining the cost neutrality for the Purchase Program and Participation Program in the **Federal Register** notice published on July 1, 2008 (73 FR 37422). While this notice provides updated cost estimates, the methodology remains essentially the same for the 2009–2010 Purchase Program, the 2009–2010 Participation Program, and the ABCP Conduit Program based on analysis of the Department of Education. This section of the notice responds in particular to the statutory requirement for an outline of the methodology and factors considered in evaluating the price at which loans may be purchased, and describes how the use of such methodology and consideration of such factors will ensure no net cost to the Federal Government results from the loan purchases for the 2009–2010 Purchase Program, the 2009–2010 Participation Program, and the ABCP Conduit Program.

Price: To determine the price at which FFELP loans would be purchased from the Conduit, the Secretary of Education considered several factors. These factors included the price that would ensure this program resulted in no net cost to the Federal Government; the increased liquidity that the rate would offer distressed lenders; borrower benefits; and other factors. Based on this analysis, the Secretary of Education determined that 100 percent of outstanding principal and accrued interest was the appropriate price for those loans first disbursed on or after May 1, 2008, with no borrower benefits or only ''eligible borrower benefits,'' and not more than 255 days delinquent at the time of purchase, and 97 percent of principal and interest for any other loans. For the 2009–2010 Purchase Program and the 2009–2010 Participation Program, the Secretary of Education determined that the prices used for the 2008–2009 Programs remained the appropriate prices for 2009–2010. The Department will pay a purchase price for a loan for 2009–2010 of 100 percent of outstanding principal and interest plus one percent fee previously paid on the loan and $75.00. To purchase a participation interest in 2009–2010 loan, the Department will pay 100 percent of the amount of the outstanding principal (including any capitalized interest) of the loan at the time of purchase of the interest.

Analysis of Cost Neutrality

The cost-neutrality analysis conducted solely by the Department of Education used, in part, credit subsidy cost estimation procedures established under the Federal Credit Reform Act of 1990 (Pub. L. No. 101–508) and OMB Circular A–11. These procedures entail performing various analyses to project cash flows to and from the Government, excluding administrative costs. For changes to outstanding FFELP guaranteed loans, the analysis reflects the modification cost, or the difference between the estimate of the net present value of the remaining cash flows underlying the most recent President's Budget for such loan guarantees, and the estimate of the net present value of these cash flows after the purchase program, reflecting only the effects of the modification. For new loans, cash flows are discounted to the point of disbursement, using the Credit Subsidy Calculator 2 (''OMB calculator''), developed by the Office of Management and Budget to estimate credit subsidy costs for all Federal credit programs, as the discounting tool. Costs for new loans can be expressed as subsidy rates that reflect the Federal costs associated with a loan; these costs are expressed as a percentage of the credit extended by the loan. For example, a subsidy rate of 10.0 percent indicates a Federal cost of $10 on a $100 loan.

The metric to determine cost neutrality was that costs under the new programs should not exceed costs expected under the FFELP in the absence of these programs. All cost estimates were based on economic and technical assumptions developed for the FY 2009 President's Budget for the FFELP, updated to reflect the impact of statutory or administrative actions that have occurred since the budget was published in February 2008.

Student loan cost estimates were developed to assess the Federal cost incurred for loans financed for each loan type. The analysis also considered risk factors particular to the 2009–2010 Purchase Program, the 2009–2010 Participation Program and the ABCP Conduit Program, such as the likelihood that lenders would sell only their least profitable loans.

This discussion outlines the Department's analysis of the 2009–2010 Purchase Program, the 2009–2010 Participation Program, and the ABCP Conduit Program with respect to the following critical aspects affecting the Federal cost:

- Administrative costs
- Borrower behavior
- Lender behavior
- Risk factors

Administrative Costs. Federal administrative costs are normally not included in subsidy cost calculations. To capture the full cost of the 2009–2010 Purchase Program, the 2009–2010 Participation Program, and the ABCP Conduit Program, however, section 459A of the HEA requires that the determination of cost neutrality reflect total costs, including Federal administrative costs subject to annual appropriation, and these costs were included in this analysis. Administrative cash flows primarily involve servicing costs associated with loans purchased by the Department. These costs can extend for up to 40 years, as servicing must continue until the last loan is paid in full. Under the base scenario for the 2009–2010 Participation and Purchase Programs, servicing costs would be $557 million on a present value basis. Servicing costs associated loans put to the Department from an ABCP Conduit, weighted across the three loan volume scenarios discussed below under ''Lender Behavior,'' would be $35 million on a net present value basis. The Department's estimates were developed using the price structure of the Department's servicing contract for put loans, with adjustments for start-up costs, inflation, and other costs.

Borrower Behavior. Since the base FFELP serves as the foundation of the 2009–2010 Purchase Program, the 2009–2010 Participation Program, and the

ABCP Conduit Program, and the characteristics of the base program are unchanged, there is no reason to believe that the 2009–2010 Purchase Program, the 2009–2010 Participation Program, or the ABCP Conduit Program will affect borrower behavior. Thus, this cost analysis uses borrower behavior assumptions used to prepare the FY 2009 President's Budget to gauge the effect on program costs of borrower-based activities such as loan repayment, use of statutory benefits such as deferments and loan discharges, and default rates and timing. These assumptions are based on a wide range of data sources, including the National Student Loan Data System, the Department's operational and financial systems, and a group of surveys conducted by the National Center for Education Statistics such as the 2004 National Postsecondary Student Aid Survey, the 1994 National Education Longitudinal Study, and the 1996 Beginning Postsecondary Student Survey.

Lender Behavior. A key factor in assessing whether the proposed programs would operate in a cost-neutral manner was lender behavior: specifically for the ABCP Conduit Program, how many ABCP Conduits would be created, and for the 2009–2010 Purchase Program and the 2009–2010 Participation Program, how many lenders would participate in the program, including how many and what type of loans would they eventually choose to sell to the Department. The Department considered alternative scenarios of lender behavior to determine whether the 2009–2010 Purchase Program, the 2009–2010 Participation Program, and ABCP Conduit Program could be considered cost-neutral under each. Because the ABCP Conduit Program would allow the Conduit Manager to sell loans with contingent borrower benefits—such as interest rate reductions for a specified number of on-time payments—all alternatives include an adjustment to reflect the impact of these potential reductions on future loan repayments. Consistent with stress tests applied by rating agencies in the private securitization market, this adjustment reduces the net cash flow to the Government by reducing the principal of sold loans by 0.5 percent a year.

Based on an analysis of lender and probability data provided by the Treasury Department and the Department of Education's financial advisors, it was determined the most likely size of the ABCP Conduit Program was $25 billion. Within that total, three scenarios were used to assess the impact of different behavior by participating lenders. The first assumed the ABCP Conduit Program would be unsuccessful and 100 percent of loans would be put to the Department on October 1, 2009; the likelihood of this scenario occurring was 2 percent. Under Scenario 2, ongoing minor market disruptions were assumed to result in 20 percent of loans being put, evenly distributed across the five-year life of the ABCP Conduit; this scenario had a likelihood of 10 percent. The third and most probable scenario, with an 88 percent likelihood, assumed that, at the end of the ABCP Conduit, not-for-profit lenders would put 75 percent of their volume and for-profit lenders would put 10 percent of their volume. Scenarios 2 and 3 both also assume loans would be put upon becoming more than 210 days delinquent. Consolidated results were developed weighted by each scenario's relative probability.

Two scenarios were examined for the 2009–2010 Participation Program, one under which lenders would put 100 percent of loans financed through the program at the end of 2010 and one under which lenders would put 50 percent of loans financed through participations and redeem the other 50 percent. For the latter scenario, the Department assumed a ''worst case'' in which lenders sold their smallest, least profitable loans. Because long-term loan servicing costs are generally charged on an account basis independent of loan size, small loans tend to be less profitable than larger loans. Considering the probability of the various scenarios, the Department determined that costs for the 2009–2010 Purchase Program, the 2009–2010 Participation Program, and the ABCP Conduit Program were less expensive to the Government than baseline subsidy costs for FFELP loans. (Please see Tables in this notice for a summary of the analysis.)

Risk Factors. Analyzing whether the 2009–2010 Purchase Program, the 2009–2010 Participation Program, and the ABCP Conduit Program would operate in a cost-neutral manner requires that projected costs account for the presence of various risk factors that must be assumed since these programs will not operate entirely like the base FFELP, or without operational risk. As such, the Secretary of Education's estimates for the 2009–2010 Purchase and Participation Programs included the same adjustments included for the original 2008–2009 programs. For the ABCP Conduit Program, the estimates include five risk factors: (1) That improvements in the national economy will reduce lenders' incentives to put loans for the ABCP Conduit; (2) that some of the loans purchased by the Department would be those on which the Department would reject a reinsurance claim under the FFELP (''claim rejects''); (3) that unforeseen problems undermine the Department's ability to effectively oversee and administer the ABCP Conduit Program (''operational risk''); (4) that costs related to servicing purchased loans do not fully reflect possible future requirements (''general administrative risk''); and (5) that the composition of loans ultimately sold to the Department may result in higher Federal costs than the composition assumed in this analysis (''portfolio composition risk'').

To ensure cost estimates reflect a conservative assessment of possible Federal costs, the Secretary of Education added cost adjustments to incorporate each risk factor. The adjustments were based on an assessment of private-sector behavior and program data as follows:

Economic Factors. While the current estimates assume a general improvement in the national economy, it also assumes that there will be some periods wherein it will be in lenders' financial interest to sell loans in the ABCP Conduit to the Department. Because there is a chance conditions will be such that lenders will choose to fund these loans privately rather than sell them to the Department, a risk factor of 50 basis points has been added to the estimate.

Claim Rejects. This risk factor takes into account the costs associated with the purchase of loans that would not typically qualify for the federal reinsurance coverage under the FFELP due to improper origination or servicing. The 12 basis point increase in cost is based on a historical rejected claim rate of 1 percent of volume, and assumes that these loans would have lower loss rates than the average portfolio.

Operational Risk. This factor addresses risks that might result from servicing errors, technology failures, or fraud. The Department has made every effort to mitigate operational risk. Nonetheless, this analysis assumes a very conservative 100 basis point risk factor to reflect reduction in program cost to reflect this risk. This is consistent with the risk factor used for the original Participation and Purchase Programs.

General Administrative Risk. The Department's analysis of cost neutrality examined the Department's current loan servicing contract and assumptions of borrower status over the life of the loan after purchase by the Department. The Department's analysis assumed minimal start-up costs because the ABCP

Conduit Program builds on the current previously established programmatic infrastructure. In December 2008, the Department extended its current loan servicing contract for one year. This involved the renegotiation of payment rates for certain activities which may affect long-term servicing costs for the loans purchased under the original Purchase Program, the original Participation Program, the 2009–2010 Purchase Program, the 2009–2010 Participation Program, and the ABCP Conduit Program. Given the future uncertainty surrounding several factors, including the assumptions outlined in this notice and the status of loans ultimately purchased by the Department, it is possible that unforeseen additional costs may be incurred. Accordingly, a General Administrative Risk Factor of 100 basis points was added to the analysis.

Portfolio Composition Risk. The cost to the Government of the ABCP Conduit Program depends on numerous factors, including loan size, default/prepayment risk, borrower benefits, and other characteristics of the purchased loans. The cost-neutrality analysis accounts for some of these factors, as outlined in this notice, but may not incorporate all of the dimensions of lender behavior and the loans ultimately purchased by the Department. Given this uncertainty, savings may deviate to some degree from the Department's estimate of savings in the model. To ensure that the potential risk and the potential costs are adequately reflected, a Portfolio Composition Risk Factor of 100 basis points was added to the analysis.

The Department also considered a high operational risk scenario in which the cost assessment for operation risk was raised from 20 basis points to 80 basis points. Even with this increased assessment, the Department estimates that the 2009–2010 Purchase Program, the 2009–2010 Participation Program, and the ABCP Conduit Program remain cost-neutral. The Terms and Conditions for the 2009–2010 Purchase Program, the 2009–2010 Participation Program, and the ABCP Conduit Program seek to reduce the likelihood of lenders exclusively selling low-balance loans. Lenders will be required to sell all eligible loans they hold for a specific borrower into the ABCP Conduit, and the Conduit Manager would be required to select loans for any put to the Department in a manner that assures that the loans to be put are representative of the Conduit portfolio. These provisions make it less likely that lenders will choose to sell only poorly-performing loans to the Department.

Conclusion. After taking into account alternative market and lender behavior scenarios, the Administration determines that the 2009–2010 Purchase Program, the 2009–2010 Participation Program, and the ABCP Conduit Program are in the best interest of the United States and will result in no net cost to the Government.

Applicable Program Regulations: 34 CFR part 682.

Electronic Access to This Document

You may view this document, as well as all other Department of Education documents published in the **Federal Register**, in text or Adobe Portable Document Format (PDF) on the Internet at the following site: *http://www.ed.gov/news/fedregister/index.html.*

To use PDF you must have Adobe Acrobat Reader, which is available free at this site. If you have questions about using PDF, call the U.S. Government Printing Office (GPO), toll free, at 1–888–293–6498; or in the Washington, DC, area at (202) 512–1530. You may also view this document in PDF at the following site: *http://www.ifap.ed.gov.*

You may obtain a copy of the Master Loan Sale Agreement and direction regarding submission of the Master Loan Sale Agreement and offers to sell loans at *http://federalstudentaid.ed.gov/ffelp.*

Note: The official version of this document is the document published in the **Federal Register**. Free Internet access to the official edition of the **Federal Register** and the Code of Federal Regulations is available on GPO Access at: *http://www.gpoaccess.gov/nara/index.html.*

(Catalog of Federal Domestic Assistance Number 84.032 Federal Family Education Loan Program)

Program Authority: 20 U.S.C. 1087i–1.

Dated: January 9, 2009.

Margaret Spellings,

Secretary of Education.

Dated: January 9, 2009.

Henry M. Paulson, Jr.,

Secretary of the Treasury.

Dated: January 9, 2009.

Stephen S. McMillin,

Deputy Director, Office of Management and Budget.

BILLING CODE 4000–01–P

TABLE 1

Replication of Participation Interest and Loan Purchase Programs

Baseline: No intervention in the Federal Family Education Loan (FFEL) Program, 2009/2010 Award Year

	Volume		
	2009	2010	Total
Stafford	14,572	14,295	28,868
Unsubsidized Stafford	18,464	21,569	40,033
PLUS	6,197	3,873	10,070
Total	39,234	39,737	78,971

	Cost Percentage		Outlays		
	2009	2010	2009	2010	Total
Stafford	16.93%	16.58%	2,467	2,370	4,837
Unsubsidized Stafford	-3.56%	-2.51%	-657	-541	-1,199
PLUS	-6.02%	-6.04%	-373	-234	-607
Total	3.66%	4.01%	1,437	1,595	3,032

Scenario 1: The 2008-2009 loan participation and loan purchase programs are replicated in 2009-2010. This scenario, representing the most likely outcome, assumes Education will purchase 100 percent of loans financed through the participation.

	Cost Percentage		Outlays		
	2009	2010	2009	2010	Total
Participation Interest Program					
Volume (non-add)			*20,108*	*19,577*	*39,685*
Base FFEL Costs (Pre-Purchase)	3.69%	4.10%	*742*	*802*	*1,545*
Program Costs	0.12%	0.78%	*24*	*153*	*177*
Claim Rejects	0.06%	0.06%	*12*	*12*	*24*
Operational Risk	0.10%	0.10%	*20*	*20*	*40*
Bankruptcy Remoteness Risk	0.15%	0.15%	*30*	*29*	*60*
Prepayment Risk	0.20%	0.20%	*40*	*39*	*79*

TABLE 1 Continued

		1.41%		276	
Administrative Expenses (NPV)	1.35%		271		*547*
Total, Participation Interest Program	1.98%	2.70%	*398*	*528*	*926*
Loan Purchase Program					
Volume (non-add)			*343*	*334*	*676*
Base FFEL Costs (Pre-Purchase)	3.69%	4.10%	*13*	*14*	*26*
Program Costs	-2.28%	-3.08%	*(8)*	*(10)*	*(18)*
Claim Rejects	0.06%	0.06%	*0*	*0*	*0*
Operational Risk	0.10%	0.10%	*0*	*0*	*1*
Bankruptcy Remoteness Risk	0.05%	0.05%	*0*	*0*	*0*
Prepayment Risk	0.20%	0.20%	*1*	*1*	*1*
Administrative Expenses (NPV)	1.47%	1.43%	5	5	10
Total, Loan Purchase Program	-0.40%	-1.24%	*-1*	*-4*	*-6*
Total, Participation Interest and Loan Purchase			397	524	921
Loans remaining in FFEL					
Volume (non-add)			*18,784*	*19,826*	*38,610*
Program Costs	*3.66%*	*4.01%*	*688*	*796*	*1,484*
Total volume (non-add)			*39,234*	*39,737*	*78,971*
Total			*1,084*	*1,320*	*2,404*
Change from Baseline			*-352*	*-275*	*-627*

Scenario 2: The 2008-2009 loan participation and loan purchase programs are replicated in 2009-2010. This scenario, representing a high-cost outcome, assumes Education will purchase the 50 percent of loans financed through the participation with the smallest average borrower balances.

	Cost Percentage		Outlays		
	2009	2010	2009	2010	Total
Participation Interest Program					
Volume (non-add)					
Loans Redeemed			*10,054*	*9,789*	*19,843*
Loans Put			*10,054*	*9,789*	*19,843*
Total			*20,108*	*19,577*	*39,685*

TABLE 1 Continued

Base FFEL Costs (Pre-Purchase)	3.69%	4.10%	*742*	*802*	*1,545*
Program Costs - Loans Redeemed	3.39%	3.39%	*341*	*332*	*673*
Program Costs - Loans Put	0.62%	1.27%	*63*	*125*	*187*
Claim Rejects	0.06%	0.06%	*6*	*6*	*12*
Operational Risk	0.80%	0.80%	*161*	*78*	*239*
Bankruptcy Remoteness Risk	0.15%	0.15%	*30*	*29*	*60*
Prepayment Risk	0.20%	0.20%	*40*	*39*	*79*
		1.57%		154	
Administrative Expenses (NPV)	1.50%		151		*305*
Total, Participation Interest Program	6.72%	7.45%	*792*	*763*	*1,555*
Loan Purchase Program					
Volume (non-add)			*343*	*334*	*676*
Base FFEL Costs (Pre-Purchase)	3.69%	4.10%	*13*	*14*	*26*
Program Costs	-2.28%	-3.08%	*-8*	*-10*	*-18*
Claim Rejects	0.06%	0.06%	*0*	*0*	*0*
Operational Risk	0.80%	0.80%	*0*	*0*	*1*
Bankruptcy Remoteness Risk	0.05%	0.05%	*0*	*0*	*0*
Prepayment Risk	0.20%	0.20%	*1*	*1*	*1*
Administrative Expenses (NPV)	1.47%	1.43%	*5*	*5*	*10*
Total, Loan Purchase Program	0.30%	-0.54%	*-1*	*-4*	*-6*
Total, Participation Interest and Loan Purchase			790	759	1,549
Loans remaining in FFEL					
Volume (non-add)			*18,784*	*19,826*	*38,610*
Program Costs	*3.66%*	*4.01%*	*688*	*796*	*1,484*
Total volume (non-add)			*39,234*	*39,737*	*78,971*
Total			*1,478*	*1,555*	*3,033*
Change from Baseline (High)			*41*	*-40*	*1*

TABLE 2

Savings from Conduit Program

Baseline: No intervention in the Federal Family Education Loan (FFEL) Program

	Volume						Cost Percentage					
	2004	2005	2006	2007	2008	2009	2004	2005	2006	2007	2008	2009
Stafford	6,135	4,038	2,618	4,452	3,287	643	12.11%	13.92%	16.24%	17.23%	14.16%	15.22%
Unsubsidized Stafford	5,107	3,732	2,691	4,251	3,259	887	2.31%	1.72%	0.51%	-1.48%	-3.97%	-3.30%
PLUS	746	851	715	1,961	1,094	198	0.70%	0.48%	-1.92%	-4.05%	-6.00%	-6.11%
Total	11,988	8,621	6,024	10,663	7,640	1,728	7.23%	7.31%	7.06%	5.86%	3.54%	3.27%

	Outlays						
	2004	2005	2006	2007	2008	2009	Total
Stafford	743	562	425	767	465	98	3,061
Unsubsidized Stafford	118	64	14	-63	-129	-29	-26
PLUS	5	4	-14	-79	-66	-12	-162
Total	866	630	425	625	270	56	2,873

Scenario 1: Education purchases 100 percent of loans in the Conduit Program on October 1, 2009.

	Cost Percentage						Outlays						
	2004	2005	2006	2007	2008	2009	2004	2005	2006	2007	2008	2009	Total
Conduit Program													
Volume (non-add)													
Loans in Conduit							2,234	2,823	3,454	8,565	6,870	1,456	25,402
Loans Put from Conduit							2,234	2,823	3,454	8,565	6,870	1,456	25,402
Change in 2009 Program Costs in Conduit						-12.94%						-188	-188
FFEL Guaranteed Loan Modification							-225	-234	-205	-426	-873		-1,962
Administrative Expenses (NPV)	2.30%	2.25%	2.16%	2.09%	2.13%	2.08%	51	64	75	179	146	30	545
Loan Purchase Subsidy Costs	-4.67%	-7.05%	-6.63%	-6.75%	-3.88%	-2.79%	-104	-199	-229	-578	-267	-41	-1,418

TABLE 2 Continued

Risk Adjustments													
Economic Risk	0.50%	0.50%	0.50%	0.50%	0.50%	0.50%	11	14	17	43	34	7	127
Claim Rejects	0.12%	0.12%	0.12%	0.12%	0.12%	0.12%	3	3	4	10	8	2	30
Operational Risk	0.20%	0.20%	0.20%	0.20%	0.20%	0.20%	4	6	7	17	14	3	51
General Administrative Risk	1.00%	1.00%	1.00%	1.00%	1.00%	1.00%	22	28	35	86	69	15	254
Portfolio Composition Risk	1.00%	1.00%	1.00%	1.00%	1.00%	1.00%	22	28	35	86	69	15	254
Total, Loan Purchase Extension	0.45%	-1.97%	-1.65%	-1.85%	1.07%	2.10%	10	(56)	(57)	(158)	73	31	(157)
Federal Financing Bank Liquidity Provision							0	0	0	0	0	0	0
Total Change							(215)	(289)	(262)	(584)	(800)	(158)	(2,307)

Scenario 2: Assumes 20% of volume is sold to the Department from the conduit, with puts evenly distributed across the five-year life of the put.. This scenario also assumes loans are put if they become more than 210 days delinquent.

	Cost Percentage						Outlays						
	2004	2005	2006	2007	2008	2009	2004	2005	2006	2007	2008	2009	Total
Conduit Program													
Volume (non-add)													
Loans in Conduit							2,234	2,823	3,454	8,565	6,870	1,456	25,402
Loans Put from Conduit							773	816	840	1,875	1,564	377	6,244
Change in 2009 Program Costs in Conduit						-9.89%						-144	-144
FFEL Guaranteed Loan Modification							-28	-27	-31	-62	-649		-796
Administrative Expenses (NPV)	0.78%	0.95%	1.14%	1.30%	1.33%	1.39%	6	8	10	24	21	5	74
Loan Purchase Subsidy Costs	3.49%	2.92%	0.22%	-1.39%	5.54%	-1.49%	27	24	2	-26	-87	-6	-66

TABLE 2 Continued

Risk Adjustments													
Economic Risk	0.50%	0.50%	0.50%	0.50%	0.50%	0.50%	11	14	17	43	34	7	127
Claim Rejects	0.12%	0.12%	0.12%	0.12%	0.12%	0.12%	3	3	4	10	8	2	30
Operational Risk	0.20%	0.20%	0.20%	0.20%	0.20%	0.20%	4	6	7	17	14	3	51
General Administrative Risk	1.00%	1.00%	1.00%	1.00%	1.00%	1.00%	22	28	35	86	69	15	254
Portfolio Composition Risk	1.00%	1.00%	1.00%	1.00%	1.00%	1.00%	22	28	35	86	69	15	254
Total, Loan Purchase Extension	7.10%	6.69%	4.18%	2.73%	-1.39%	2.72%	96	111	109	240	128	41	725
Federal Financing Bank Liquidity Provision							2	3	3	9	8	2	27
Total Change							71	86	82	187	(513)	(101)	(188)

Scenario 3: Assumes 75 % of not-for-profit volume and 10% of for-profit volume from the conduit is sold to the Department at the end of five years. This scenario also assumes loans are put if they become more than 210 days delinquent.

	Cost Percentage						Outlays						
	2004	2005	2006	2007	2008	2009	2004	2005	2006	2007	2008	2009	Total
Conduit Program													
Volume (non-add)													
Loans in Conduit							2,234	2,823	3,454	8,565	6,870	1,456	25,402
Loans Put from Conduit							625	606	563	1,171	992	238	4,195
Change in 2009 Program Costs in Conduit						-7.32%						-107	-107
FFEL Guaranteed Loan Modification							-27	-27	-24	-56	-645		-778
Administrative Expenses (NPV)	0.26%	0.32%	0.42%	0.55%	0.56%	0.66%	2	2	2	6	6	2	19
Loan Purchase Subsidy Costs	6.37%	6.09%	3.82%	1.51%	-7.29%	-1.14%	40	37	22	18	-72	-3	41

TABLE 2 Continued

Risk Adjustments													
Economic Risk	0.50%	0.50%	0.50%	0.50%	0.50%	0.50%	11	14	17	43	34	7	127
Claim Rejects	0.12%	0.12%	0.12%	0.12%	0.12%	0.12%	3	3	4	10	8	2	30
Operational Risk	0.20%	0.20%	0.20%	0.20%	0.20%	0.20%	4	6	7	17	14	3	51
General Administrative Risk	1.00%	1.00%	1.00%	1.00%	1.00%	1.00%	22	28	35	86	69	15	254
Portfolio Composition Risk	1.00%	1.00%	1.00%	1.00%	1.00%	1.00%	22	28	35	86	69	15	254
	9.45%	9.22%	7.07%	4.88%	-	2.34%	104	118	121	266	127	40	777
Total, Loan Purchase Extension					3.90%								
Federal Financing Bank Liquidity Provision							1	1	2	5	4	1	14
Total Change							78	93	99	214	(514)	(66)	(94)

Summary

	Total Costs	Probability of Occurrence	Probable Cost
Scenario 1	-2,307	2.00%	-46
Scenario 2	-188	10.00%	-19
Scenario 3	-94	88.00%	-83
	-2,590		-148

APPENDIX A

Loan Purchase Commitment Program for Eligible FFELP Loans

Summary of Terms and Conditions

These terms and conditions do not purport to be all of the terms and conditions that will govern the Loan Purchase Commitment Program. The final terms and conditions of the Loan Purchase Commitment Program will be those included in a definitive Master Loan Sale Agreement and other documentation related thereto.

Purchase Program Purpose: The purpose of the Loan Purchase Commitment Program ("Purchase Program") as implemented for the 2009-2010 academic year is to encourage Eligible Lenders, as defined below, to provide students and parents access to Stafford and PLUS loans made under the Federal Family Education Loan Program ("FFELP") for the 2009-2010 academic year, by providing a market for Eligible Loans during the term of the Purchase Program. The Purchase Program described herein (the "2009 Purchase Program") will consist of a standard Master Loan Sale Agreement ("2009 Master Loan Sale Agreement") to be provided by the Department of Education ("Department") and related documents to which each Eligible Lender will agree.

Purchase Program Authority: Under section 459A of the Higher Education Act of 1965 ("HEA"), as amended, the Department has the authority to purchase, or enter into forward commitments to purchase, student loans made under sections 428 (subsidized Stafford loans), 428B (PLUS loans), or 428H (unsubsidized Stafford loans) of the HEA, on such terms as the Secretary of Education ("Secretary"), the Secretary of the Treasury, and the Director of the Office of Management and Budget jointly determine are in the best interest of the United States.

Program Description: Pursuant to the terms of the 2009 Purchase Program, the Department may purchase Eligible Loans that are held by Eligible Lenders. Such purchases may occur during the period commencing on July 1, 2009 and ending on September 30, 2010. To participate in the 2009 Purchase Program, each Eligible Lender must submit a Notice of Intent to Participate in the 2009 Program. With the filing of this Notice of Intent to Participate, the Eligible Lender is vested with the option to put to the Department those loans that are Eligible Loans under the terms of the 2009 Purchase Program. Prior to executing the put, the Eligible Lender must enter into a 2009 Master Loan Sale Agreement with the Department, as explained later here. Entering into the Master Loan Sale Agreement preserves the put option. Neither the filing of the Notice of Intent to Participate nor the Master Loan Sale Agreement commits the Eligible Lender to put Eligible Loans to the Department.

Upon execution of the put option, the Lender must transfer title to the loans it sells, and at the direction of the Department, deliver to the Department or its agent the fully executed master promissory note (or all electronic records evidencing the same) evidencing each Eligible Loan that the Eligible Lender wishes to sell to the Department and any and all other documents and computerized records relating to such Eligible Loans.

In order to acquire the option to sell loans under the Purchase Program, an Eligible Lender must first file with the Department a "Notice of Intent to Participate in the Loan Purchase Commitment Program and/or Loan Participation Purchase Program for Eligible FFELP Loans" ("Notice of Intent"). By so doing, the Lender states its desire to have the option to sell loans or participation interests in loans, or both, to the Department. The timing of the Lender's Notice of Intent controls which loans the Lender may sell under the 2009 Purchase Program. The Lender may not sell Eligible Loans to the Department under the 2009 Purchase Program on which the first disbursement was made prior to the date on which the Department receives the Lender's Notice of Intent.

Furthermore, an Eligible Lender may sell the Department a Loan that was made by another lender only if both that Eligible Lender and the Lender that made the loan have each filed with the Department a Notice of Intent, and only if each Lender filed its respective Notice prior to date on which the Lender made or acquired the Loan.

Commitment to Future FFELP Participation: By its execution of a 2009 Master Loan Sale Agreement, each Eligible Lender represents to the Department that it shall continue to participate in the FFELP and that at such time as funds become reasonably available to such Eligible Lender from private sources, it will originate new FFELP loans or acquire FFELP loans made by other lenders after the date of the Secretary's purchases from such Eligible Lender under the 2009 Agreement.

Eligible Lender: Any entity that is an eligible lender under § 435(d) of the Higher Education Act and holds FFELP loans, or that holds a beneficial ownership interest in FFELP loans held on its behalf by an eligible lender as trustee, is eligible to participate in the 2009 Purchase Program, subject to the terms and conditions of the Purchase Program as described herein and in the 2009 Master Loan Sale Agreement.

Eligible Loans: The following loans will be eligible for purchase pursuant to the Purchase Program:

Subject to the Notice Requirements described below, FFELP subsidized or unsubsidized Stafford Loans and FFELP PLUS loans that were made to students (and parent PLUS loans made to parents of dependent students) for loan periods that include, or begin on or after, July 1, 2009 ("Academic Year 2009-2010") and on which the first disbursement is made on or after May 1, 2009 but no later than July 1, 2010 and which is fully disbursed no later than September 30, 2010.

In order to be eligible for the Purchase Program, each loan must --

(a) have been originated and serviced in compliance with all requirements of applicable law, including the HEA and the implementing regulations;

(b) have been fully disbursed;

(c) bear interest at the stated statutory rate under the HEA for such loan, except as that rate may be modified pursuant to an Eligible Borrower Benefit, as defined below;

(d) be evidenced by a signed master promissory note in the form (including any required addenda) published and prescribed by the Department, without change of any kind, containing no provision that restricts the ability of the Department to exercise its rights under the Master Loan Sale Agreement or requires the obligor to consent to the transfer, sale or assignment of the rights and duties of the Eligible Lender;

(e) have been originated by an Eligible Lender that, pursuant to the Program Description above, filed with the Department a timely Notice of Intent to Participate;

(f) satisfy each of the terms, conditions and representations and warranties in the Master Loan Sale Agreement, including without limitation the following representations and warranties:

(1) immediately prior to the sale of the Eligible Loan, the Eligible Lender has good and marketable title to the loan free and clear of any encumbrance, lien or security interest or any other prior commitment (other than as may be granted in favor of the Department or that will be released upon the Department's purchase of such loan);

(2) the loan has not been modified, extended or renegotiated in any way, except as required or permitted under the HEA or other applicable laws, rules and regulations, and the applicable guarantee agreement;

(3) the loan constitutes a legal, valid and binding obligation to pay on the part of the related obligor enforceable in accordance with its terms and is not subject to a current bankruptcy proceeding;

(4) the loan has no borrower benefits other than Eligible Borrower Benefits. Eligible Borrower Benefits include only unconditional upfront fee reductions which are accrued and paid or made prior to the date on which an Eligible Loan is sold, or permitted reductions in interest rates of not more than .25 percent that are contingent on the use of an automatic payment process by the borrower for any payments due;

(5) the sale of the loan does not conflict with law or require consent of any person not a party to the sale; and

(6) the loan satisfies all of the terms and conditions of the Master Loan Sale Agreement; and

(7) if the loan is subject to a servicing agreement, such agreement is terminable upon thirty (30) days' notice, and the Eligible

Lender shall be responsible for any de-boarding, deconversion or related fees or expenses to the related servicer; and

(g) if the lender holds more than one Stafford Loan for a borrower, each of which is an Eligible Loan, the lender sells all such Eligible Stafford Loans to the Department.

Loans that are ineligible for the Purchase Program include --

FFELP Consolidation Loans or any other types of loans not specifically described in the Master Loan Sale Agreement;

loans disbursed for academic years other than Academic Year 2009-2010;

loans on which the lender has committed to providing the borrower with any borrower benefits other than Eligible Borrower Benefits; and

loans on which a default claim or other claim for payment on the loan has been filed with the guaranty agency.

Term: In order to participate in the 2009 Purchase Program, a lender must be an Eligible Lender and must enter into a 2009 Master Loan Sale Agreement with the Department under which the Eligible Lender will have an irrevocable option to sell Eligible Loans, as defined above, that are fully disbursed, to the Department subject to the terms and conditions of the 2009 Master Loan Sale Agreement. The Eligible Lender must notify the Department that it will exercise its option to sell the fully disbursed Eligible Loan(s) no later than August 14, 2010, and must complete all loan sales on or before September 30, 2010. If an Eligible Lender fails to meet one or both of these dates the option expires, and the Department will not honor any commitment to purchase loans under the 2009 Purchase Program.

Purchase Price: The Department will purchase an Eligible Loan at a purchase price equal to the sum of (1) the outstanding principal balance of the Eligible Loan at time of sale, plus (2) accrued and unpaid interest on the Eligible Loan as of time of sale, plus (3) a reimbursement of the one percent loan fee (as provided by section 438(d) of the HEA) previously paid by the Eligible Lender to the Department, plus (4) $75.00.

Document Delivery: In connection with each sale of Eligible Loans, as directed by the Department, the Eligible Lender must deliver the original fully executed master promissory note evidencing the purchased Eligible Loans and any and all other documents and electronic records evidencing such loans to the entity designated by the Department to retain such documents.

Purchase Frequency: Eligible Lenders may sell Loans to the Department not more frequently than weekly.

Closing Conditions: In order enter into a 2009 Master Loan Sale Agreement with the Department, an Eligible Lender must deliver to the Department each of the following,

unless the Lender has previously entered into a Master Loan Sale Agreement, provided such records at that time, and now certifies that the records remain accurate --

(a) copies of the applicable formation documents, corporate resolutions and good standing certificates for the Eligible Lender;

(b) incumbency certificates of the Eligible Lender;

(c) opinions of the Eligible Lender's counsel relating to corporate matters, legality, validity and enforceability of the Master Loan Sale Agreement and related documents, no conflicts, and such other matters as the Department may request; and

(d) such other documents as the Department may request.

On or prior to each sale of Eligible Loans to the Department, each Eligible Lender shall be required to deliver to the Department --

(a) any required security releases for the Eligible Loans;

(b) a purchase request for such purchase;

(c) loan schedule (in electronic format); and

(d) such other documents as the Department may request.

Notice Requirements: Each Eligible Lender that elects to participate in the 2009 Purchase Program must take the following steps:

- The Lender must submit its Notice of Intent to Participate in the program, as explained above.
- Unless the Lender has entered into a Master Participation Agreement with the Department, the Lender must, no later than March 31, 2010, execute the 2009 Master Loan Sale Agreement and provide a statement setting forth representations, warranties and guarantees required by the Department in the Federal Register notice.
- After the Department countersigns the Master Loan Sale Agreement, and at least forty-five (45) days before the date of any intended sale of loans, the Lender must notify the Department of its intent to sell loans to the Department and must certify that the representations, warranties and guarantees made previously to the Department are current and true.

Loan Servicing: Each loan shall be purchased by the Department on a servicing-released basis. If the loan is subject to a servicing agreement, such agreement must be terminable upon thirty (30) days' notice by the Department. The Department may issue such notice at any time after the Eligible Lender provides notice of its intent to sell loans. The Eligible Lender shall be responsible for any de-boarding, deconversion or related

fees or expenses to the related servicer. Accordingly, upon purchase of any Eligible Loan, the Department shall obtain all rights to service such Eligible Loan and may, in its sole discretion require deconversion of such Eligible Loan in order to service the loan itself or through a third-party servicer of its designation.

Fees and Expenses: Each Eligible Lender shall be required to pay all of its costs and expenses which are incurred in connection with the negotiation, preparation, execution and delivery of the Master Loan Sale Agreement and any or any other related documents, including, without limitation, the reasonable fees and out-of-pocket expenses of counsel for any Eligible Lender with respect thereto, and all other fees, costs and other expenses incurred in connection with the transfer of ownership of Eligible Loans, and delivery of such loans, to the Department.

Other Department Program: Separately, the Department is offering a Loan Participation Purchase Program under which it purchases participation interests in eligible FFELP loans made for the 2009-2010 academic year. This Purchase Program does not require, nor does it preclude, the participation of an Eligible Lender in the Loan Participation Purchase Program .

Governing Law and Forum: The 2009 Master Loan Sale Agreement and the Notice of Intent to Participate, and the rights and obligations of the parties thereto, shall be governed by and construed in accordance with Federal law. Insofar as there may be no applicable Federal law, the internal laws of the State of New York (without giving regard to conflicts of laws principles other than Sections 5-1401 and 5-1402 of the New York General Obligations Law) shall be deemed reflective of Federal law insofar as to do so would not frustrate the purposes of any provision of this Master Loan Sale Agreement or the transactions governed thereby.

APPENDIX B

Loan Participation Purchase Program for Eligible FFELP Loans

Summary of Terms and Conditions

These terms and conditions do not purport to be all of the terms and conditions that will govern the Loan Participation Purchase Program. The final terms and conditions of the Loan Participation Purchase Program will be included in a definitive Master Participation Agreement and other documentation related thereto.

Loan Participation Purchase Program Purpose: The purpose of the Loan Participation Purchase Program ("Participation Program") as implemented for the 2009-2010 academic year is to encourage Eligible Lenders, as defined below, to provide students and parents access to Stafford and PLUS loans made under the Federal Family Education Loan Program ("FFELP") for the 2009-2010 academic year by selling short-term participation interests in Eligible Loans, as defined below, to the Department of Education ("Department") during the term of the Participation Program. The Participation Program described herein (the "2009 Participation Program") will consist of a standard Master Participation Agreement (the "2009 Master Participation Agreement") to be provided by the Department and related documents to which each Eligible Lender and related parties described below will agree.

Participation Program Authority: Under section 459A of the Higher Education Act of 1965 ("HEA"), as amended, the Department has the authority to purchase, or enter into forward commitments to purchase, student loans made under sections 428 (subsidized Stafford loans), 428B (PLUS loans), or 428H (unsubsidized Stafford loans) of the HEA, on such terms as the Secretary of Education ("Secretary"), the Secretary of the Treasury, and the Director of the Office of Management and Budget jointly determine are in the best interest of the United States.

Program Description: Pursuant to the terms of the 2009 Participation Program, the Department may purchase Participation Interests in Eligible Loans held by an Eligible Lender, acting as a sponsor under a Master Participation Agreement ("Sponsor"). In order to participate in the 2009 Participation Program, each Sponsor must enter into a 2009 Master Participation Agreement with the Department and a third-party Custodian acceptable to the Department.

Put Option means the option issued to Eligible Lenders by the Department under the Department's separate Loan Purchase Commitment Program for the 2009-2010 academic year (the "2009 Purchase Program"). As a condition precedent to the Department's purchase of a Participation Interest in an Eligible Loan under the 2009 Participation Program, both the originating Eligible Lender and, if different, the Eligible Lender then in possession of the Eligible Loan must each have provided to the Department timely "Notice of Intent to Participate in the Loan Purchase Commitment Program and/or Loan Participation Purchase Program for Eligible FFELP Loans"("Notice of Intent").

An Eligible Lender that sells participation interests to the Department under the 2009 Participation Program is not obligated by that action to exercise the Put Option.

Eligible Lender: Any entity that is an eligible lender under § 435(d) of the Higher Education Act and holds FFELP loans, or that holds a beneficial ownership interest in FFELP loans held by an eligible lender as trustee, on its behalf, is eligible to participate in the Participation Program, subject to the terms and conditions of the Participation Program as described herein and in the Master Participation Agreement.

Sponsor means an Eligible Lender that will sell Participation Interests in FFELP loans under the terms of the Participation Program.

Custodian means the entity selected by the Sponsor and acceptable to the Department that will hold legal title to those Eligible Loans in which the Department purchases a Participation Interest . The Custodian or its designee holds the fully executed master promissory notes that evidence the Purchased Eligible Loans and any and all other documents and computerized records relating to such Purchased Eligible Loans. Only a National or State-chartered bank that is an eligible lender pursuant to § 435(d)(1)(A) of the HEA can serve as a Custodian. The Department reserves the right to establish those additional requirements that an entity must meet in order to act as a Custodian for the Participation Program.

Program Structure: Under the Participation Program, a Sponsor will transfer Eligible Loan to the Custodian, which will issue to the Sponsor participation interests in such loans. These interests will be evidenced by participation certificates issued by the Custodian. The Department will purchase from the Sponsor a senior participation interest in the loans ("Purchased Eligible Loans."), and will receive a senior participation certificate that represents a 100 percent beneficial ownership interest in the principal portion of each such Purchased Eligible Loan and the right to receive the "Participant's Yield."

The Participant's Yield is the amount, payable for each quarter during which the Department holds a participation interest, equal to (a) the daily average principal balance of the Department's participation interest in a Purchased Eligible Loan for that quarter multiplied by (b) the product of (i) the rate determined by the Department and published pursuant to § 438(b)(2)(I)(i)(I) of the HEA for that quarter ("Commercial Paper Rate") plus fifty (50) basis points ("Spread") and (ii) the number of days in that quarter, and (c) divided by 360. If any of specified adverse events, including filing for bankruptcy, occur with respect to the Sponsor or its Servicer, the Spread may be increased to three hundred (300) basis points.

The Sponsor will receive from the Custodian a subordinate participation interest with respect to the Purchased Eligible Loans, and a participation certificate that evidences the Sponsor's right to redeem the Purchased Eligible Loans by exercise of the Put Option or otherwise, and subject to the terms of the Master Participation Agreement, the right to receive those collections on the Purchased Eligible Loans that remain after satisfaction of the Participant's Yield and the Department's Participation Interest in the Purchased Eligible Loans.

The Custodian will hold title to the Purchased Eligible Loans in trust for the benefit of both the Department as the owner of the senior participation interest and the Sponsor as owner of the junior participation interest, until the Sponsor redeems the Department's Participation Interest.

In order to protect the interests of the Department, the Department will also be granted a protective first priority perfected security interest in the following assets: (i) the Purchased Eligible Loans in which it has a Participation Interest; (ii) all payments received on the Purchased Eligible Loans and all funds collected or to be collected with respect to such Loans; and (iii) any monies on deposit in accounts established under the related Master Participation Agreement (including the Collection Account), and all related rights and security with respect thereto under the related Master Participation Agreement. Each subsequent purchase of a participation interest in other Eligible Loans, or in Purchased Eligible Loans on which subsequent disbursements have been made, will be evidenced by an increase in the outstanding principal balance of the related Participation Interest. The amount of Purchased Eligible Loans and the balance of the Participation Interest may decrease as principal payments or other reductions in the principal balance are made with respect to the Purchased Eligible Loans and remitted to the Department or in connection with the redemption or exercise of the Put Option with respect to any Purchased Eligible Loans.

The Master Participation Agreement will include representations, warranties and covenants and events of default and other termination events as are customary under similar participation interest facilities or as are determined by the Department.

Commitment to Future FFELP Participation: By its execution of a 2009 Master Participation Agreement, each Eligible Lender represents to the Department that it shall continue to participate in the FFELP and that at such time as funds become reasonably available to the Eligible Lender from private sources, it will originate new FFELP loans or acquire FFELP loans made by other lenders after the date of the Secretary's purchases from the Eligible Lender.

Eligible Loans: The following loans will be eligible for the Participation Program:

Subject to the Notice Requirements described below, FFELP subsidized or unsubsidized Stafford Loans and FFELP PLUS loans made to students and parents of dependent students for loan periods that include, or begin on or after, July 1, 2009 ("Academic Year 2009-2010"), and for which the first disbursement is made on or after May 1, 2009 but no later than July 1, 2010, and that is scheduled to be fully disbursed no later than September 30, 2010.

In order to be eligible for the Participation Program each loan must --

(a) have been originated and serviced in compliance with all requirements of applicable law, including the HEA and the implementing regulations;

(b) have had at least one disbursement made;

(c) bear interest at the stated statutory rate under the HEA for such loan, except as that rate may be modified by an Eligible Borrower Benefit, as defined in the Agreement;

(d) be evidenced by a signed master promissory note in the form (including any required addenda) published and prescribed by the Department, without change of any kind, containing no provision that either restricts the ability of the Department to exercise its rights under the Master Participation Agreement or requires the obligor to consent to the transfer, sale or assignment of the rights and duties of the Eligible Lender;

(e) be eligible, when fully disbursed, to be sold to the Department through the Put Option; and

(f) satisfy each of the terms, conditions and representations and warranties in the Master Participation Agreement, including without limitation the following representations and warranties:

(1) immediately prior to delivery of legal title to the Custodian, the Sponsor has good and marketable title to the loan free and clear of any encumbrance, lien or security interest or any other prior commitment (other than as may be granted in favor of the Department or that will be released upon the Department's purchase of a participation interest in such loan);

(2) the loan has not been modified, extended or renegotiated in any way, except as required or permitted under the HEA or other applicable laws, rules and regulations, and the applicable guarantee agreement;

(3) the loan constitutes a legal, valid and binding obligation to pay on the part of the related obligor enforceable in accordance with its terms and is not subject to a current bankruptcy proceeding;

(4) the loan has no borrower benefits or other incentive programs other than Eligible Borrower Benefits, which include only unconditional upfront fee reductions which are accrued and paid or made prior to the date on which a Participation Interest is sold, or permitted reductions in interest rates of not more than .25 percent that are contingent on the use of an automatic payment process by the borrower for any payments due;

(5) the transfer of the loan to the Custodian and the sale of the Participation Interest does not conflict with law or require consent of any person not a party to the transaction;

(6) the loan satisfies all of the terms and conditions of the Master Participation Agreement;

(7) if the loan has not been fully disbursed, the Sponsor will make or cause all subsequent scheduled disbursements to be made, as an agent of the Custodian;

(8) if the loan is subject to a servicing agreement, such agreement must be terminable upon thirty (30) days' notice, and the Sponsor shall be responsible for any de-boarding, deconversion or related fees or expenses to the related Servicer, as defined below.

Loans that are ineligible for the Participation Program include --

FFELP Consolidation Loans or any other types of loans not specifically described in the Master Participation Agreement;

loans disbursed for an academic year other than Academic Year 2009-2010;

loans on which the lender has committed to providing the borrower with any borrower benefits other than Eligible Borrower Benefits;

loans that have not had at least one disbursement as of July 1, 2010;

loans in which the Department has previously purchased a Participation Interest, whether or not that interest has been redeemed; or

loans that are more than 225 days delinquent or on which a default claim or other claim for payment on the loan has been filed with the guaranty agency.

Term: In order to participate in the Participation Program, a Sponsor, and, if not itself an Eligible Lender, its Eligible Lender Trustee, must enter into a single Master Participation Agreement with the Department under which the Sponsor will have an irrevocable option to sell to the Department, subject to the terms and conditions of the Master Participation Agreement, Participation Interests in each Eligible Loan. The Department will not enter into a 2009 Master Participation Agreement with an Eligible Lender after July 1, 2010. The Sponsor must exercise the option to sell Participation Interests in Eligible Loan(s) on or before August 1, 2010.

After August 1, 2010, the Department will not purchase Participation Interests in any loans other than Purchased Eligible Loans, and the option to sell Participation Interests in any other loans expires. After that date, the Department will purchase additional Participation Interests in those Purchased Eligible Loans on which an additional disbursement has been made after that date, on the following conditions:

- the first disbursement on the Loan was made by July 1, 2010,

- the Loan became subject to a Participation Interest by August 1, 2010,
- the second disbursement was made between August 1, 2010 and September 14, 2010,
- the Sponsor notified the Department that it intended to redeem the Participation Interest with respect to the Loan by selling the Loan to the Department by the Put Option, and
- the Sponsor then completes the sale under the Put Option within 30 days of the second disbursement.

Purchase Price: The Department will purchase each Participation Interest at a purchase price equal to the outstanding principal balance of the Eligible Loans subject to such Participation Interest at time of the purchase of such Interest. To maintain the Department's 100% interest in the principal balance of each Purchased Eligible Loan, the Sponsor shall be required to fund any subsequently scheduled disbursements on such loan, and the Department will purchase a Participation Interest in any amount subsequently disbursed on such Purchased Eligible Loans.

Collection Account: A segregated pledged account established at the Custodian for the purpose of holding all payments and other proceeds received on or with respect to the Purchased Eligible Loans, including proceeds of the sale of such loans ("Collections") for the benefit of the Department, as holder of the Participation Interest. The Servicers, as defined below, will deposit all Collections as soon as possible, but in no event later than two (2) business days after receipt of good funds, into the Collection Account.

Responsibility for Fees and Other Charges: The Custodian is responsible for any fee or other charge owed to the Department or to the guaranty agency on an Eligible Purchased Loan after the loan has been transferred to the Custodian, including amounts owed to the Department as a recapture of excess interest ("negative special allowance").

Permitted Investments: The Custodian may invest those amounts on deposit in each Collection Account only in overnight or short-term U.S. Treasury securities that will, in all cases, mature on or prior to the day immediately preceding the date such funds are required to be disbursed.

Minimum Delivery Requirements: Each Sponsor that enters into a Master Participation Agreement with the Department shall be required to represent and warrant to the Department that such Sponsor intends to sell to the Department during the term of the Participation Program, participation interests in Eligible Loans with an aggregate unpaid principal balance of not less than $50,000,000. In order to satisfy such minimum delivery requirement, a Sponsor shall be permitted to aggregate Eligible Loans originated or held by other Eligible Lenders, provided that such Sponsor has authority to convey legal title to such Eligible Loans to the Custodian and to sell Participation Interests in Eligible Loans originated or held by such other Eligible Lenders. Eligible Lenders that claim Special Allowance Payments (SAP) at the rate payable for eligible not-for-profit holders and that seek to aggregate Eligible Loans must do so through a Sponsor that aggregates only loans that qualify for SAP at that rate.

Purchase Frequency: Sponsors shall sell Participation Interests to the Department not more frequently than weekly.

Closing Conditions: Except as noted below, on or prior to the execution of the Master Participation Agreement by a Sponsor, such Sponsor shall be required to deliver to the Department --

(a) copies of the applicable formation documents, corporate resolutions and good standing certificates for the Sponsor;

(b) incumbency certificates of the Sponsor;

(c) opinions of the Sponsor's counsel relating to corporate matters, legality, validity and enforceability of the Master Participation Agreement and related documents, perfection, no conflicts, and such other matters as the Department may request;

(d) agreements, if any, with other Eligible Lenders to aggregate, transfer legal title to, and sell participation interests in Eligible Loans;

(e) UCC search reports and all UCC-1 Financing Statements;

(f) Master Participation Agreement, Eligible Servicing Agreement, as defined below (if any), Custodial Agreement (if not included as part of the Master Participation Agreement); and

(g) such other documents as the Department may request.

A Sponsor that has previously entered into a Master Loan Sale Agreement with the Department and in doing so, has provided the records described in (a), (b), and (c) at that time, may now certifies that these records remain accurate, rather than providing copies of those records

On or prior to each sale of a Participation Interest in Eligible Loans to the Department, each Sponsor shall be required to deliver to the Department --

(a) any required security releases for the Eligible Loans;

(b) list of lockboxes and copies of lockbox servicing instructions, to the extent not already provided;

(c) a purchase request for such purchase;

(d) Loan Schedule (in electronic format); and

(e) such other documents as the Department may request.

In addition, the Custodian will be required to deliver to the Department (a) a certification evidencing receipt and review of each of the loan documents relating to the Eligible Loans, and (b) a Participation Certificate.

Custodian Monthly Closing Reports: The Custodian will provide to the Department a monthly settlement date report summarizing loan activity for the prior calendar month, in the form and on the date specified by the Department

Loan Servicing: Each Eligible Loan which is subject to a Participation Interest shall be serviced by or at the direction of the Custodian. The Custodian may retain the Sponsor or a servicer of FFELP student loans not under sanction by the Department To service the Loans, and in its discretion and pursuant to directions from the Department, to maintain custody of Loan records. The entity that services the Loans ("Servicer") must enter into, and perform pursuant to the terms of, an Eligible Servicing Agreement, as defined below, and must service the loans in accordance with Department regulations. The Sponsor will be responsible for the payment of any servicing related fees and expenses incurred in connection with the Participation Program. A servicing agreement will be deemed to be an "Eligible Servicing Agreement" if it: (i) contains customary terms and conditions that reflect a negotiated, arms-length transaction; (ii) provides for not more than a fair market servicing fee; (iii) includes usual and customary representations, warranties, covenants and events of default; (iv) acknowledges or be amended to acknowledge that the Department is an intended third-party beneficiary of such agreement entitling the Department to instruct the Servicer and exercise remedies with respect to the applicable Purchased Eligible Loans upon the occurrence of a Termination Event (as defined under the Master Participation Agreement); and (v) provides that any Servicer will deposit all funds received on Purchased Eligible Loans into the Collection Account (as defined above) no later than two (2) business day after receipt of good funds.

Each Eligible Servicing Agreement will also provide that upon notice of the exercise of the Put Option or other acquisition of a Purchased Eligible Loan by the Department, such agreement is terminable upon thirty (30) days' notice without the payment of any de-boarding, deconversion or related costs, penalties or fees to the related Servicer and that the servicing shall be transferred as instructed by the Department. Accordingly, upon purchase of any Eligible Loan or other acquisition of title thereto, the Department shall obtain all rights to service such Eligible Loan and may, in its sole discretion, require deconversion of such Eligible Loan in order to service the loan itself or through a third-party Servicer of its designation.

Servicing Standard: Each Servicer will manage, service, administer, make collections and calculate any amounts owed to the Department with respect to the Purchased Eligible Loans (including collection of any interest subsidy payments and special allowance payments and calculate any negative special allowance owed with respect to the Purchased Eligible Loans) in accordance with all requirements as set forth in the established Master Participation Agreement, including but not limited to compliance with all applicable federal and state laws, including all applicable rules, regulations and other requirements of the HEA and the applicable guarantee agreement. Each Servicer shall be responsible for segregating, marking each Eligible Purchased Loan as owned by the related Custodian and remitting to the Custodian all payments received on the Purchased

Eligible Loans. This includes, but is not limited to, physical or electronic marking of relevant computer records.

Additional Reports and Information: The Sponsor and the Custodian may be required by the Department to provide regular monthly reports regarding transactions affecting loans, including information identifying the schools for which loans were made, loan delinquencies, and other information.

At any time, the Department and its representatives will have the right to request, schedule and conduct, during normal business hours and upon reasonable prior notice, a due diligence/audit of the Servicer's operations in respect to this Participation Program, the transaction documents, the Eligible Purchased Loans and settlement reports at the expense of the Servicer or Sponsor. Also, from time to time during a calendar year, the Department shall have the right to request, schedule and conduct, during normal business hours and upon reasonable prior notice, additional due diligence of the Sponsor, the Custodian and any Servicers, at the Sponsor's expense.

With respect to each Servicer, the Department shall be provided any audit reports or other annual compliance/operational audits performed on such Servicer relating to the servicing of FFELP student loans.

The Custodian shall be responsible for providing to the Department, within 90 days after the Termination Date of a Participation, as provided in the Master Participation Agreement, an audit conducted by an independent auditor of the Custodian's activities under that Participation.

Other information as requested by the Department shall be delivered to the Department, which may include audited annual financial statements or unaudited quarterly financial statements of the Sponsor and any Servicer or their respective consolidated groups.

Statements of Compliance: Both the Sponsor and the Servicer will provide to the Department a statement of compliance with respect to the Master Participation Agreement and any related documents and applicable law, together with an agreed upon procedures letter delivered by an independent public accountant with respect to the Master Participation Agreement, all in form acceptable to the Department within 60 days of the execution of the Master Participation Agreement and on any subsequent dates specified by the Department.

Operation of the Participation Program: The Department will pay the Sponsor the purchase price for a Participation Interest promptly after the Sponsor notifies the Department and the Custodian confirms that a disbursement has been made on the Eligible Loan and the Eligible Loan has been placed in the Participation Program, subject to timing and frequency arrangements specified herein and in the Master Participation Agreement. The Department will remit this payment through the Custodian. The Sponsor is responsible for ensuring that all fees and charges, and all servicing requirements under FFELP rules for a Purchased Loan, are satisfied. In the event that any Eligible Loan has become subject to a Participation Interest and such Eligible Loan is purchased out of the Participation Program by the Sponsor or any other entity, such loan shall cease to be eligible for the Participation Program and no Eligible Lender shall thereafter be permitted to sell a Participation Interest in such loan to the Department.

A Purchased Eligible Loan that becomes and remains delinquent must be redeemed by the Sponsor not later than the 255th day of such delinquency.

Termination Date: The termination date for each Participation Interest will be the earliest to occur of (i) the date on which the Sponsor notifies the Department that it will no longer be a participant in the program and reduces its amount outstanding to zero, (ii) the effective date of a termination event, including, without limitation, the bankruptcy, insolvency or other adverse event with respect to the Sponsor, and (iii) September 30, 2010.

Resolution of the Facility; Redemption Payment/Put Option: Under the terms of the Participation Program, each Participation Interest will expire on September 30, 2010. On or before such date, the Sponsor must pay the Custodian for remittance to the Department, with respect to each Purchased Eligible Loan subject to the Participation Interest, the purchase price paid by the Department for the Participation Interest in such Purchased Eligible Loan together with the Participant's Yield on such purchase price, calculated through the next scheduled distribution date. Upon receipt of this redemption payment by the Custodian, the Department agrees to release its interest in any Eligible Loan which is subject to any Participation Interest that is so redeemed. If the Sponsor elects to exercise the Put Option with respect to such underlying Eligible Loans, the Sponsor will release its interest in such Eligible Loans to the Department, and the Department will offset the Redemption Payment owed by Sponsor against the amount due the Sponsor under the Put Option and will remit the net amount to the Custodian.

On the Termination Date, all Purchased Eligible Loans, and the related servicing rights attributable to such loans, for which the Sponsor has not made the Redemption Payment shall become the property of the Department without any further action by the Department and the Participation Interests and the rights of the Department and the Sponsor under the Master Participation Agreement shall be terminated.

Distribution of Funds:

Monthly distribution: On a monthly basis, the Custodian will remit to the Department funds on deposit in the Collection Account in order to satisfy the outstanding Participant's Yield and Participation Interest.

Final distribution: On or before October 20, 2010, the Custodian shall distribute any remaining funds in the Collection Account, in the following order of priority --

a) To the Department, the Participant's Yield;

b) To the Department, any remaining amounts until its Participation Interest balance is reduced to zero; and

c) To the Sponsor, any remaining amounts.

Notice Requirements: The Department will publish the terms of the 2009 Loan Participation Purchase Program in the Federal Register. Each Eligible Lender that elects to participate in the 2009 Participation Program must take the following steps:

- The Lender must submit to the Department a Notice of Intent.
- Upon confirmation of receipt by the Department of the Notice of Intent, the Lender must provide a good faith estimate of the amount of Participation Interests it proposes to sell to the Department throughout the term of the Participation Program. The Lender must update this estimate on a monthly basis.
- The Lender must execute the Master Participation Agreement and provide the representations, warranties and guarantees required by the Department under that Agreement by the earlier of July 1, 2010, or the closing date of the sale of the first Participation Interest.
- If the Lender proposes to exercise the Put Option to sell Purchased Eligible Loans to the Department, the Lender must, after the Department countersigns the Master Participation Agreement, and at least forty-five (45) days before the date of any intended sale of loans, notify the Department of its intent to sell loans to the Department and must certify that the representations, warranties and guarantees made previously to the Department are current and true.

The timing of the Lender's Notice of Intent controls which loans for which the Lender may sell Participation Interests. The Eligible Lender may not sell Participation Interests to the Department relating to loans for which the first disbursement was made prior to the date on which the Department receives the Notice of Intent. If an Eligible Lender wishes to sell a Participation Interest to the Department in an Eligible Loan that it did not originate, both that Eligible Lender and the Lender that made the loan must each file a Notice of Intent with the Department. Each Lender must file its respective Notice prior to date on which it made or acquired the Loan.

Fees and Expenses: Each Sponsor shall be required to pay all of its costs and expenses which are incurred in connection with the negotiation, preparation, execution and delivery of the Master Participation Agreement and any or any other related documents, including, without limitation, the reasonable fees and out-of-pocket expenses of counsel for such Sponsor, all other costs and expenses of servicing the Purchased Eligible Loans, and all costs and expenses incurred in connection with the transfer and delivery of the Purchased Eligible Loans to the Custodian, including, without limitation, the fees of the custodian and any fees and expenses incurred in connection with transferring ownership of any Purchased Eligible Loans to the Custodian or to the Department in connection with the exercise of the Put Option or any other acquisition of ownership of the Purchased Eligible Loans by the Department.

Governing Law and Forum: The Master Participation Agreement, the Notice of Intent to Participate, and the rights and obligations of the parties thereto shall be governed by

and construed in accordance with Federal law. Insofar as there may be no applicable Federal law, the internal laws of the State of New York (without giving regard to conflicts of laws principles other than Sections 5-1401 and 5-1402 of the New York General Obligations Law) shall be deemed reflective of Federal law insofar as to do so would not frustrate the purposes of any provision of the Master Participation Agreement or the transactions governed thereby.

APPENDIX C

FFELP Loan ABCP Conduit Put Program

Summary of Terms and Conditions
January 9, 2008

The following terms and conditions do not purport to be all of the terms and conditions that will govern the FFELP Loan ABCP Conduit Put Agreement. The final terms and conditions of the FFELP Loan ABCP Conduit Put Agreement will be included in a definitive Put Agreement and other documentation related thereto.

FFELP Loan ABCP Conduit Purpose: The purpose of the FFELP Loan ABCP Conduit ("Conduit Program") and the related Put Agreement is to encourage Sellers, as defined below, to provide students and parents access to Stafford and PLUS loans (each as defined below) made under the Federal Family Education Loan Program ("FFELP") by providing a highly rated and liquid source of funding to Sellers for Eligible Loans, as defined below, supported by the right to put such Eligible Loans to the Department of Education ("Department") upon the occurrence of certain events. The Put Option, as defined below, will be evidenced by a Put Agreement ("Put Agreement") among the Department, a commercial paper conduit ("Conduit") and its agent and Eligible Lender Trustee ("Conduit Administrator", together with the Conduit, individually and collectively, as applicable, "Conduit Party"). The Conduit Program will be documented pursuant to agreements and other documentation ("Transaction Documents") consistent with the Put Agreement and these terms and conditions.

Program Authority: Under section 459A of the Higher Education Act of 1965, as amended ("HEA"), the Department has the authority to purchase, or enter into forward commitments to purchase, student loans made under sections 428 (Subsidized Stafford loans), 428B (PLUS loans), or 428H (Unsubsidized Stafford loans) of the HEA, on such terms as the Secretary of Education ("Secretary"), the Secretary of the Treasury, and the Director of the Office of Management and Budget jointly determine are in the best interest of the United States.

Program Description: One or more Conduits may be established by Sellers and other private market participants. Any such Conduit may be established with the following structure as described in this section "Program Description" or such alternative structure as may be approved by the Department, with or without the use of SPVs and/or Funding Notes (each as defined below); provided, that any such structure shall have terms and conditions substantially as set forth in this Summary of Terms and Conditions. Under the Conduit Program as implemented in a form now being developed, Sellers may sell Eligible Loans to bankruptcy remote special purpose vehicles (each, an "SPV") pursuant to Purchase Agreements, as defined below. Each SPV will issue one or more funding

notes (each, a "Funding Note") to the Conduit and certificates or subordinated interests to the Seller to fund its purchase of Eligible Loans. Certain state agency or not-for-profit Sellers may issue Funding Notes directly to the Conduit without the use of an SPV if they meet the criteria specified in the Transaction Documents (the SPV or Seller issuing the Funding Note, the "Funding Note Issuer"). Funding Notes will be payable from, and will be secured by a first priority perfected security interest in, the Eligible Loans owned by the SPVs. The Conduit will then fund its acquisition of each Funding Note through the issuance of commercial paper ("CP") and/or other interests (collectively, "Securities"). The assets and liabilities of the Conduit will be administered by an administrator. Upon maturity, CP will be paid from one or a combination of the following: (i) payments received under the Funding Notes (which will be paid from collections and proceeds of the Eligible Loans), (ii) the issuance of additional Securities, (iii) advances provided by certain liquidity providers to the Conduit Program, if any ("Liquidity Providers"), and (iv) a reserve account, if any. Upon the occurrence of a Put Event (as defined below) and subject to the terms of the Put Agreement, the Department will agree to purchase Eligible Loans that are part of the Conduit Program.

The Conduit shall conduct a competitive process to select any Conduit Program party receiving a fee in connection with the provision services to the Conduit or otherwise relating to the Conduit Program, including, but not limited to, the Conduit Administrator, any manager, any trustee, and the Liquidity Providers.

Put Option: The option issued pursuant to the Put Agreement (by the Department) to the Conduit Party that requires the Department to purchase Eligible Loans upon the occurrence of a Put Event. Once issued with respect to an Eligible Loan, the Put Option will be irrevocable until the Put Expiration for so long as such loan is part of the Conduit Program and will not be subject to set-off by the Department with respect to amounts owed to the Department by any Seller, any SPV, the Conduit Party or any Eligible Lender Trustees.

Put Expiration: The Put Option will expire with respect to all Eligible Loans on the fifth anniversary of the date of the Put Agreement but not later than September 30, 2014.

Put Event: The Put Option shall be exercised by the Conduit Party automatically upon the occurrence of (i) any failure to make a liquidity funding when due; provided, that, a Put Event shall not be deemed to occur under this clause (i) if the related liquidity funding shall have been made by any other person; or (ii) any liquidity funding shall remain unpaid for more than forty-five (45) days after the date on which such liquidity funding was made in accordance with the related liquidity agreement; or (iii) the date that is 45 days prior to the Put Expiration; provided, that a Put Event shall occur on each date preceding such forty-fifth day to the extent necessary in order to ensure that the Daily Put Limit (as defined below) is not exceeded on any related Put Date; or (iv) the declaration or automatic occurrence of a Funding Note "event of default" (as defined in the Transaction Documents), including without limitation an event of default relating to a Seller's breach of its commitment to lend under the section of these terms and conditions entitled "Commitment to Future FFELP Participation" as more fully described in the

Transaction Documents; or (v) with respect to any loan pledged to the Conduit Party pursuant to a Purchase Agreement, such loan shall have become 210 days or more delinquent; or (vi) the date that 45 days prior to maturity date of any Securities (other than CP); provided that the Department will only purchase Eligible Loans pursuant to clauses (i) through (iv) that are not sold pursuant to an auction process conducted by or on behalf of the Conduit Party. The minimum auction price shall be the Put Price.

Put Notice: The Department will be required to purchase Eligible Loans subject to the Put Option on the date (or, if such date is not a business day, the following business day or, if such day is a Blackout Date (as defined below), the preceding business day that is not a Blackout Date and on which the Daily Put Limit has not been exceeded) 45 days after it has received a notice of the exercise of the Put Option ("Put Notice") following a Put Event ("Put Date"). The Put Notice shall become irrevocable (subject to the auction process described above) (i) with respect to any Put Notice delivered in connection with the occurrence of a Put Event set forth in clauses (i) through (iv) of the definition thereof, fifteen (15) days after delivery to the Department of such Put Notice, and (ii) with respect to any Put Notice delivered in connection with the occurrence of a Put Event set forth in clause (v) of the definition thereof, thirty (30) days after the date upon which the related loan(s) became 210 days delinquent. On the second business day of each week, the Conduit Party shall deliver the Put Notice with respect to all Eligible Loans that became 210 days delinquent during the preceding week.

Put Allocation: The Eligible Loans subject to any Put Notice (with respect to clause (i) through (iv) and (vi) of the definition of Put Event) or any auction shall consist of a sample of all Eligible Loans owned by each Funding Note Issuer to which the Put Notice applies on such date based on criteria and methodology specified in the Put Agreement allocated by the Funding Note Issuer and sufficient to pay the applicable liquidity funding or additional Securities.

As more fully described in the Put Agreement, if a seller has only one servicer or if the seller is selling loans across all of its servicers the loans will be selected on a random basis with no threshold testing required. All loans in and out must be on an account basis (all associated loans of a borrower). All random selections will be done in a manner specified in advance and certified by the Department.

With respect to Loans coming in to conduit:

1) Each Seller will provide a representation of no adverse selection

2) Unless a Seller notifies ED otherwise, the Eligible Portfolio should exclude "restricted loans" which are any loans already pledged to a securitization or where servicing can not be released.

3) If the Seller is selling less than all of the loans of a particular servicer, the Seller conducts a random selection by cohort year for such servicer.

4) Test the Selected loans first by loan size and remove loans systematically starting with the loans that are furthest out of bounds (higher or lower) (from the selected servicer) until the loans size "Threshold" is met; second test portfolio by school type and remove loans systematically starting with the loans that are furthest out of bounds (higher or lower) (from the selected servicer) until the school type "Threshold" is met; third test portfolio by payment status and remove loans systematically starting with the loans that are furthest out of bounds (higher or lower) (from the selected servicer) until the payment status "Threshold" is met; fourth test portfolio by Loan Type and remove loans systematically starting with the loans that are furthest out of bounds (higher or lower) (from the selected servicer) until the payment status "Threshold" is met.

5) Threshold will mean with a 95% confidence level of the Sellers Eligible Portfolio.

With respect to Loans out for a securitization:

Same as proposed for loans coming into the conduit except the Threshold for the tests conducted in 4) above will be based on the current portfolio in the conduit prior to removal of loans for the securitization.

Put Price: The Department will purchase Eligible Loans subject to a Put Notice at a price equal to (i) 100% of the outstanding principal balance including accrued interest of Eligible Loans (A) with first disbursements made on or after May 1, 2008; (B) subject to only Eligible Borrower Benefits (as defined below) and (C) less more than 210 days delinquent as of the related Put Event or (ii) 97% of the outstanding principal balance including accrued interest of all other Eligible Loans not more than 270 days delinquent. In each case accrued interest includes interest to be capitalized through the Put Date. "Eligible Borrower Benefits" include only unconditional upfront fee reductions which are accrued and paid or made prior to the date on which the loan is sold to an SPV or pledged by a direct Funding Note Issuer, or permitted reductions in interest rates of not more than 0.25 percent that are contingent on the use of an automatic payment process by the borrower for any payments due.

Daily Put Limit: The Department will not be required to purchase Eligible Loans under the Put Agreement having an aggregate Put Price (in addition to Eligible Loans purchased pursuant to clause (v) of the definition of "Put Event") in excess of (a) $500,000,000 per week during any calendar week prior to July 20, 2009 or (b) $10,000,000,000 per day on or after July 20, 2009. There may be Put Dates on any business day, including successive business days. In addition, the Department will not be required to purchase any loans on any day identified by the Department in writing to the Conduit Administrator as a day unavailable for making purchases of Loans or other payments under this Agreement ("Blackout Date") if identified in writing to the Conduit Administrator.

If the Department is otherwise required to honor the exercise of the Put Option on a date that is a Blackout Date, the Department will honor such by payment within the daily limits stated here on the preceding business day that is not a Blackout Date on which the Daily Put Limit has not been exceeded.

Put Fee: The Department will be entitled to a fee ("Put Fee") for providing the Put Option equal to the sum of a the Fixed Put Fee and the Variable Put Fee (each as defied below). The "Fixed Put Fee" is an amount equal to a per annum rate on the average daily balance of the outstanding principal balance of the Funding Notes equal to (A) with respect to each Put Fee Payment Date (as defined below) during the 2009 and 2010 calendar years, 0.05%, (B) with respect to each Put Fee Payment Date during the 2011 calendar year, 0.15% and (C) with respect to each Put Fee Payment Date during the 2012 and 2013 calendar years and thereafter, 0.25%. The "Variable Put Fee" is 80% the product of (A), the excess, if any, of the Target Rate (as defined below) over the over the Conduit Cost of Funds Rate (as defined below) times (B) the average daily outstanding principal balance of the Funding Notes, as defined below, calculated for each day in the related period, in each case calculated and payable on a monthly basis in arrears. The Fixed Put Fee will be payable with all other senior fees and expenses and the Variable Put Fee will be payable subordinate to the CP and the fees payable to the Liquidity Providers.

The "Put Fee Payment Date" is any date upon which any portion of the Put Fee is due and payable to the Department pursuant to the terms and provisions of the Transaction Documents.

The "Target Rate" will be equal to one-month LIBOR (determined in accordance with the Transaction Documents). The "Conduit Cost of Funds Rate" will be equal to the per annum rate equivalent to the daily average for the related accrual period of the weighted average daily discount and interest on the CP together with any fees and commissions of dealers of CP plus, with the Department's prior approval, similar amounts with respect to other Securities and, if applicable other Securities; provided, that in calculating the "Conduit Cost of Funds Rate" such discount rate and fees and commissions shall be converted to an interest bearing equivalent rate per annum.

Seller: An institution that holds Eligible Loans (whether directly or through an eligible lender trustee) shall be eligible to participate in the Conduit Program, subject to the terms and conditions of the Conduit Program as described herein and in the Conduit Program Term Sheet. Upon the occurrence of a termination event under the applicable Purchase Agreement, the related seller will cease to be a Seller and the related SPV will not be permitted to purchase further loans from such entity.

Conduit Administrator: An entity selected by the Conduit and acceptable to the Department that will act as agent for the Conduit. The Conduit Administrator will be responsible for exercising the Put Option and must be a National or State-chartered bank that is an eligible lender pursuant to § 435(d)(1)(A) of the HEA and meets the qualifications set forth in the Put Agreement.

Purchase Agreements: Under the Conduit Program, Sellers may sell Eligible Loans to their respective SPVs pursuant to purchase agreements in the form approved by the Department (each, a "Purchase Agreement") for a purchase price consisting of cash,

Securities and/or other interests. Upon the sale of Eligible Loans to an SPV, a Seller shall be required to simultaneously sell to such SPV all other Eligible Loans, if any, to the same borrower then owned by such seller or its affiliates. Any Eligible Loan purchased by an SPV and pledged to the Conduit Party during the Program Term, as defined below, will be subject to the Put Agreement. Once an Eligible Loan has been sold to an SPV, such Eligible Loan shall become ineligible for inclusion after the Purchase Date in either the Department's Loan Purchase Commitment Program or Loan Participation Purchase Program, unless the Eligible Loan is repurchased by the Seller in connection with a Put Event and such loan is otherwise eligible for such program. Certain parties may be able to issue Funding Notes without the use of an SPV. In which case the applicable Program Documents shall have effectively the same provisions described herein, as applicable.

The Purchase Agreements shall include representations, warranties, covenants and events of default and other termination events as are customary for similar Conduit Programs or as otherwise determined by the Department including representations and warranties ("Eligibility Representations") that each loan transferred to the SPV is an Eligible Loan on the date such Eligible Loan is purchased by the SPV ("Purchase Date"). Upon the receipt of notice from the SPV, the Conduit Party or the Department, the Seller will be required to repurchase any loan which failed to satisfy these Eligibility Representations as of the Purchase Date. All of the SPV's rights under the Purchase Agreement with respect to any loans for which the Put Option is exercised shall be assigned to the Department. Accordingly, after the put is exercised with respect to a loan, the Department will have all repurchase and other rights against the Seller if such loan did not satisfy the Eligibility Representations on the applicable Purchase Date.

Prior to the sale of any Eligible Loans to the Conduit Program, the Conduit Party (or its sub-custodian) must receive (i) the loan documentation with respect to such loans required by the Purchase Agreement, (ii) the applicable Eligible Servicing Agreement, as defined below, and (iii) such other certifications and documentation as required by the Put Agreement or the Purchase Agreement.

The only eligibility criteria for the put will be the Put Criteria as defined below. Without limiting the generality of the foregoing, except for the Put Criteria, the Department's obligations to honor the Put Agreement with respect to a loan shall be unconditional even if all of the Eligibility Representations (other than the Put Criteria) were not true as of the applicable Purchase Date or subsequently became untrue.

Each Funding Note Issuer will have the right to prepay at any time all or a portion of the Funding Note issued by that Funding Note Issuer and to obtain a release of an appropriate portion of the Eligible Loans from the lien of the Funding Note (provided no obligations to the Department or the Conduit which are then due remain unpaid). If the Funding Note is not prepaid in full and less than all Eligible Loans of the Funding Note Issuer are being released, the loans to be released will be selected by the Seller or SPV, as applicable, and must be selected based on criteria and methodology specified in the Transaction Documents. Sellers may not resell to their respective SPVs, and Funding

Note Issuer may not re-pledge, any Eligible Loan that has been previously released in connection with a full or partial prepayment of the related Funding Note.

Program Term: The Put Opinion will apply to Eligible Loans pledged by a Funding Note Issuer under the Conduit Program prior July 1, 2010 the "Program Term").

Commitment to Future FFELP Participation: By its execution of a Purchase Agreement, the Seller (and, as applicable, the Eligible Lender Trustee acting on its behalf) represents that:

By its execution of a Purchase Agreement, and upon each sale or pledge thereunder, the applicable Seller shall represent to the Department that:

(i) during a twenty four (24) month period commencing with the month in which it sells or pledges Loans pursuant to a Purchase Agreement, it will originate and disburse Subsidized Stafford Loans, PLUS Loans or Unsubsidized Stafford Loans, or will, within the same twenty-four (24) month period, acquire Subsidized Stafford Loans, PLUS Loans or Unsubsidized Stafford Loans made by other lenders, and that the combined amount of such originated and acquired loans, excluding any loans (A) sold or pledged pursuant to a Purchase Agreement, (B) sold to the Department in connection with the Loan Purchase Commitment Program, and (C) with respect to which participation interests are sold to the Department in connection with the Loan Participation Purchase Program, shall equal the Commitment Amount for such month;

(ii) within the twelve (12) months following the month in which it sells and/or pledges loans pursuant to a Purchase Agreement, it will conduct activities constituting a continued participation in FFELP, including but not limited to servicing a pre-existing FFELP loan portfolio, purchasing additional FFELP loans, or maintaining a platform from which the Seller may originate FFELP loans; and

(iii) not later than twenty-seven (27) months following the month in which it first sells and/or pledges Loans pursuant to a Purchase Agreement (and every six months thereafter until each Commitment Amount has been satisfied, each a "Commitment Reporting Date"), it will provide a report to the Department and the Conduit Party certifying that it has originated and/or acquired FFELP loans in an amount equal to or exceeding the Commitment Amounts required to be satisfied prior to such Commitment Reporting Date;

provided, that, the applicable Seller may satisfy the commitment set forth above by arranging to have another eligible lender under Section 435(d) of HEA ("Eligible Lender") assume such commitment as evidenced by a commitment letter, in form satisfactory to the Department, between such Eligible Lender and the Department, with a copy to the Conduit Party.

For the purposes of confirming compliance with the Seller's commitment above, the Seller must, on an annual basis, provide a report to the Department setting forth the

activities conducted by the Seller with the Net Cash Proceeds received through the sale of loans or issuance of Funding Notes under the applicable Purchase Agreement, the dollar value and number of loans originated and/or acquired, and detailing any other uses of funds received through the sale of loans or issuance of Funding Notes under the applicable Purchase Agreement and the amounts expended on such "other uses". The Department may apply a penalty for failure to comply with this commitment.

A Seller may satisfy this commitment by arranging to have another Seller assume such commitment.

In addition, in connection with the Seller's commitment above, on the last business day of each calendar month, commencing in the first month in which a Seller sells or pledges a Loan pursuant to a Purchase Agreement and ending in July 2010, the Conduit Party will provide, or cause to be provided, to the Department a notice setting forth the amount of Net Cash Proceeds received by each Seller that is party to a Purchase Agreement during such month.

"Commitment Amount" means, with respect to a Seller and all sales and/or pledges of loans to the Conduit Program during a calendar month, an amount equal to the product of (a) the Net Cash Proceeds received by the Seller in such month, multiplied by (b) the Market Adjustment for such month.

"Net Cash Proceeds" means an amount equal to (a) the cash proceeds received by a Seller from the sale and/or pledge of Loans to the Conduit Program (including cash proceeds received from the sale and/or pledge of Securities other than CP) ("Cash Proceeds"), minus (b) the amount paid by the Seller in connection with such sale and/or pledge of the loans to repay indebtedness secured by the loans [or, with respect to any loans that are not pledged to secure indebtedness of the Seller, the Deemed Liabilities allocated to such loans.]

"Market Adjustment" means, as of any date of determination and any Commitment Amount, the lesser of (a) one (1) and (b) the percentage equivalent of a fraction, (i) the numerator of which is the annualized aggregate original principal balance of all Loans originated by all Eligible Lenders (as shown on the Department's NSLDS system) during the period commencing with the month immediately following the month of the applicable sale and/or pledge of Loans to the Conduit program and ending at the end of the twenty-fourth month after such sale and/or pledge (or at the end of the preceding month if less than twenty-four months have elapsed since such sale and/or pledge), and (ii) the denominator of which is the aggregate original principal balance of all Loans originated by all Eligible Lenders (as shown on the Department's NSLDS system) during the twelve month period ending with the month immediately preceding the month of the applicable sale and/or pledge of Loans to the Conduit Program.

"Deemed Liabilities" means, with respect to a Seller and loans not pledged to secure indebtedness of the Seller, an amount equal to the product of (a) the Cash Proceeds for such Loans and (b) the percentage equivalent of a fraction, the numerator of which equals

the total liabilities and the denominator of which equals the total liabilities and stockholder's equity, in each case calculated in accordance with generally accepted accounting principals and reflected in the most recent consolidated quarterly financial statements for the Seller (or the Seller's ultimate parent to the extent financial statements are not available for the Seller).

Eligible Loans: The following loans will be eligible for the Put Agreement:

FFELP Subsidized Stafford or Unsubsidized Stafford Loans and FFELP PLUS loans that were made to students, and PLUS loans made to parents of dependent students, in each case for which the first disbursement was made on or after October 1, 2003 but no later than July 1, 2009, and that was fully disbursed no later than September 30, 2009.

In order to be eligible for the Conduit Program and the Put Agreement each loan must ((a) through (c), "Put Criteria"):

(a) constitute a loan under one of the FFELP programs described above as certified by the applicable guaranty agency at the time of sale to the Conduit Program;

(b) have been disbursed within the dates specified above; and

(c) have been sold to an SPV by a Seller or pledged to the Conduit pursuant to a Purchase Agreement in a form approved by the Department and containing the terms, conditions and representations and warranties required by the Department, including without limitation the following representations and warranties (with such technical changes as may be approved by the Department):

(1) not be delinquent 210 days or more as of the date of sale to the SPV or pledged to the Conduit or then be subject to a default claim filed with the applicable guaranty agency;

(2) immediately prior to the sale to the SPV or pledged to the Conduit, the Seller has good and marketable title to the loan free and clear of any encumbrance, lien or security interest or any other prior commitment (other than any lien that will be released upon the sale or pledge of such loan);

(3) the loan has been fully disbursed not later than the date of sale to the Conduit Program;

(4) the loan has not been modified, extended or renegotiated in any way, except as required under the HEA or other applicable laws, rules and regulations, and the applicable guarantee agreement, except as any such modification, extension, or renegotiation relates exclusively to borrower benefits on the Loan;

(5) the loan constitutes a legal, valid and binding obligation to pay on the part of the related obligor enforceable in accordance with its terms and is not subject to a current bankruptcy proceeding;

(6) the loan was originated and has been serviced in compliance with all requirements of applicable law, including the HEA and the implementing regulations;

(7) the sale, pledge or assignment of the loan does not conflict with any law or require notice to or consent, approval, authorization or order of any person or governmental authority, except for such consents, approvals, authorizations or orders, if any, that have been obtained prior to the related date of sale or pledge, and for any notices to borrowers and guaranty agencies required by the HEA;

(8) the loan satisfies all of the terms and conditions of the Purchase Agreement and the Transaction Documents;

(9) any servicing agreement applicable to such loan shall automatically terminate with respect to such loan upon the relevant Put Date for such loan unless the Department otherwise notifies the related Servicer as soon as practicable but not less than five (5) Business Days prior to the Put Date and the Seller is responsible for any de-boarding, deconversion or related fees or expenses to the related Servicer, as defined below;

(10) the loan is evidenced by a signed promissory note in the form (including any required addenda) published by, and prescribed by, the Department, without change of any kind, and is not subject to any agreement not contained in that note that would bar, condition or limit either transfer of the loan or the exercise by a transferee of the rights of the lender under terms of the note, except as such an agreement relates exclusively to Eligible Borrower Benefits on the loan;

(11) the loan was sold and/or pledged pursuant to a Purchase Agreement on or prior to the earlier of July 1, 2010 and

the declaration of a "termination event" (as defined in the Transaction Documents); and

(12) the loan was not selected adversely from the Eligible Loans owned by the Seller for sale to the Conduit Program based on criteria specified in the Transaction Documents.

Loans that are ineligible for the Conduit Program and the Put Agreement include:

FFELP consolidation loans or any other types of loans not specifically permitted under Section 459(A) of the HEA; if any Eligible Loans are consolidated after the sale to the Conduit Program, the proceeds of the applicable consolidation loan must be used to pay such Eligible Loans in full; or

loans disbursed for periods other than those defined above.

Loans with borrower benefits other than Eligible Borrower Benefits will be eligible for the Conduit Program with a Put Price equal to 97%.

Allocation of Funding Among Sellers: The process for allocating funding availability among Sellers will be set forth in the Transaction Documents.

Responsibility for Fees and Other Charges: Each Funding Note Issuer is responsible for any fee or other charge owed to the Department or to the guaranty agency on an Eligible Loan after the loan has been sold to such Funding Note Issuer, including amounts owed to the Department as a recapture of excess interest ("negative special allowance").

Closing/Put Conditions: On or prior to the execution of a Purchase Agreement by a Seller, such Seller shall be required to deliver to the Conduit Administrator:

(a) copies of the applicable formation documents, corporate resolutions and good standing certificates for the Seller;

(b) incumbency certificates of the Seller;

(c) opinions of the Seller's counsel relating to corporate matters, legality, validity and enforceability of the Purchase Agreement and related documents, no conflicts, true sale and non-consolidation and such other matters as the Department may request;

(d) either (i) UCC search reports and all UCC-1 Financing Statements within 45 days of the date of such Purchase Agreement, or (ii) an opinion of counsel to the Seller, in form and substance approved by the Department, relating to the priority of the Conduit Party's lien on the related Loans;

(f) the Purchase Agreement, Eligible Servicing Agreement, as defined below (if any), and the Custodial Agreement (if any);

(g) a copy of a "notice of intent to participate" submitted by or on behalf of the Seller to the Department;

(h) evidence of establishment of the trust accounts in the name of the Funding Note Issuer;

(i) an irrevocable power of attorney, which power of attorney is coupled with an interest, from such Seller to the Conduit Party and assignable to the Department granting certain rights and powers specified with respect to the applicable loans; and

(j) such other documents as specified in the Put Agreement.

On or prior to the sale of an Eligible Loan to the Department pursuant to the Put Agreement, the Conduit Party, shall be required to deliver to the Department:

(a) a release of lien for the Eligible Loans;

(b) a Put Notice;

(c) loan schedule (in electronic format);

(d) an original trust receipt certifying that it, or a Servicer holding physical possession on its behalf in accordance with an Eligible Servicing Agreement, is in possession of the applicable loan documents relating to such Eligible Loans;

(e) a bill of sale; and

(f) such other documents as specified in the Put Agreement.

Except as expressly set forth in the Put Agreement, the failure to deliver any such item shall not effect the Department's obligations to honor the Put Option.

Loan Servicing: Each Eligible Loan which is subject to the Put Agreement shall be serviced by the Seller or another servicer of FFELP student loans (the Seller or such other entity being referred to herein as the "Servicer") that will service the Eligible Loan, on behalf of the Conduit Program, pursuant to the terms of an Eligible Servicing Agreement, as defined below, and in accordance with Department regulations and such Servicer is not under sanction by the Department. Each SPV will be responsible for the selection of the Servicer and for the payment of any servicing related fees and expenses (except for fees of the new servicer if the Department takes over servicing) incurred in connection with the Conduit Program. A servicing agreement will be deemed to be an "Eligible Servicing Agreement" if it: (i) contains customary terms and conditions that reflect a negotiated, arms-length transaction; (ii) includes usual and customary representations, warranties,

covenants and events of default; (iii) includes an acknowledgment by the Servicer that the Department and the Conduit are the intended third-party beneficiaries of such agreement entitling the Department to instruct the Servicer and exercise remedies with respect to the applicable Eligible Loans upon the occurrence of the exercise of the Put Option; and (iv) provides that, upon the occurrence of a Put Event with respect to such Loan, such agreement shall automatically terminate with respect to such Loan upon the relevant Put Date for such Loan unless the Department otherwise notifies the related Servicer as soon as practicable but not less than five (5) Business Days prior to the related Put Date without any payment by the Department of any de-boarding, deconversion or related costs, penalties or fees to the related Servicer and that the servicing shall be transferred as instructed by the Department. The Department will be responsible for any boarding, conversion or related costs or fees of the new servicer. Accordingly, upon purchase of any Eligible Loan or other acquisition of title thereto, the Department shall obtain all rights to service such Eligible Loan and may, in its sole discretion require deconversion of such Eligible Loan in order to service the loan itself or through a third-party Servicer of its designation.

Additional Reports/ Information: A standard reporting package acceptable to the Department to be used by the Conduit and SPVs and containing information on loans by schools, delinquencies, and other features shall be provided to the Department by the Sellers, the Conduit Party and other parties to the Transaction Documents on a periodic basis.

At any time, the Department and its representatives will have the right to request, schedule and conduct, during normal business hours and upon reasonable prior notice, a due diligence/audit of the Servicer's operations in respect to the Conduit Program, the Transaction Documents, the Eligible Loans and settlement reports at the expense of the Servicer. Also, from time to time during a calendar year, the Department shall have the right to request, schedule and conduct, during normal business hours and upon reasonable prior notice, additional due diligence of the Sellers (and their SPVs), the Conduit and any Servicers, at such party's expense.

With respect to each Servicer, the Department shall be provided any audit reports or other annual compliance/operational audits performed on such Servicer relating to the servicing of FFELP student loans.

On an annual basis, the Conduit Party shall be responsible to cause, at its own expense, a registered public accounting firm and that is a member of the American Institute of Certified Public Accountants to furnish a report to the Department, to the effect that (i) it has obtained a representation regarding certain matters from the management of the Conduit Party, which includes an assertion that the Conduit Party has complied with the terms and provisions of the Transaction Documents and (ii) on the basis of an examination conducted by such firm in accordance with standards for attestation engagements issued or adopted by the Public Company Accounting Oversight Board, it is expressing an opinion as to whether such representation and assertion was fairly stated in all material respects, or it cannot express an overall opinion regarding such party's assessment of compliance with the Transaction Documents. In the event that an overall opinion cannot be expressed, such registered public accounting firm shall state in such report why it was unable to express such an opinion. Such report must be available for general use and not contain restricted use language and shall include among other things,

the amount of proceeds received by the Conduit in connection with the Put Agreement and the use of such proceeds.

Other information as requested by the Department shall be delivered to the Department, which may include audited annual financial statements or unaudited quarterly financial statements of the Sellers, the Conduit and any Servicer or their respective consolidated groups.

Statements of Compliance: Each of the Sellers, the SPVs, the Conduit and Servicers will be required to provide to the Administrator an annual statement of compliance with respect to the Transaction Documents, together with an agreed upon procedures letter delivered by an independent public accountant.

Notice Requirements: Each Seller that elects to participate in the Conduit Program must notify the Department, via a standard form letter, of its desire to participate in the Conduit Program. Such letter must not only contain notice of this desire, but must also contain representations and guarantees as required by the Department established in the Federal Register notice.

Fees and Expenses: Each Seller shall be required to pay all of its costs and expenses which are incurred in connection with the negotiation, preparation, execution and delivery of the related Purchase Agreement and any or any other related documents, including, without limitation, the reasonable fees and out-of-pocket expenses of counsel for such Seller, and all costs and expenses incurred in connection with the transfer and delivery of the Eligible Loans to the Conduit Party, including, without limitation, any fees and expense incurred in connection with transferring ownership of any Eligible Loans to the Department other than the fees and expenses of the Department's servicer.

Governing Law and Forum: The Put Agreement and the rights and obligations of the parties thereto shall be governed by and construed in accordance with Federal law. Insofar as there may be no applicable Federal law, the internal laws of the State of New York (without giving regard to conflicts of laws principles other than Sections 5-1401 and 5-1402 of the New York General Obligations Law) shall be deemed reflective of Federal law insofar as to do so would not frustrate the purposes of any provision of such Agreements or the transactions governed thereby.

APPENDIX D

Notice of Intent to Participate in the Loan Purchase Commitment Program and/or Loan Participation Purchase Program for Eligible FFELP Loans

[_____, 200_]

U.S. Department of Education
Washington, D.C.
By: E-mail: ffel.agreementprocess@ed.gov

Re: Loan Purchase Commitment Program and/or Loan Participation Purchase Program for Eligible FFELP Loans

Ladies and Gentlemen:

The undersigned, an eligible Federal Family Education Loan Program (FFELP) lender under Section 435(d)(1) of the Higher Education Act of 1965, as amended (HEA), eligible lender trustee, or holder of beneficial interests in FFELP Loans ("Undersigned"), hereby notifies the Department of Education that it intends to participate in either the Loan Purchase Commitment Program (the "Purchase Program") or the Loan Participation Purchase Program (the "Participation Program") for the 2009-2010 academic year, or both programs. Both programs are authorized under Section 459A of the HEA, as amended, and are generally described in the Notice of Terms and Conditions (Register Notice) published in the Federal Register, Vol. 73, No. 127, July 1, 2008, and more particularly as to the 2009-2010 academic year, in the notice published in the Federal Register on or about January 15, 2009. By signifying intent to participate in one or both of the programs, the undersigned does not commit to actually participate in either program.

By signifying its intent to participate in such program(s), the Undersigned hereby certifies and agrees that:

If the Undersigned participates in either of the programs, it will continue to originate or acquire FFELP loans made to students and parents.

If the Undersigned participates in the Participation Program, it will sell, from time to time, participation interests in FFELP loans to the Department of Education with an aggregate unpaid principal balance of not less than $50,000,000 in loans either held by such eligible lender or aggregated with other FFELP loans held by one or more eligible lenders. (The Undersigned recognizes that there is no minimum for the Purchase Program)

The Undersigned acknowledges that it shall not be permitted to sell FFELP loans or participation interests therein to the Department of Education with respect to which the first disbursement was made prior to the date on which the Department of Education receives this 2009 Notice of Intent to Participate.

The Department of Education will return to the Undersigned, via electronic mail (e-mail), information indicating the date on which the 2009 Notice of Intent to Participate was received by the Department of Education.

The Department of Education will accept signed copies of this 2009 Notice of Intent sent as a PDF attachment via e-mail at the address below.

The Undersigned is aware that it must refer to the Federal Register Notice and to the agreements referred to therein for a complete description of the terms and conditions under which the Department of Education will administer the Purchase Program and the Participation Program for the 2009-2010 academic year. The Undersigned also is aware that in order to participate in either of these programs, it must execute a Master Agreement for the respective program. If the Undersigned is a beneficial holder of FFELP loans, the Undersigned has included on this form the LID(s) under which it operates. If the Undersigned, as an eligible lender trustee, files this Notice on behalf of its beneficial holders of FFELP loans, the Undersigned has included the name and LID of each of those beneficial holders.

This 2009 Notice of Intent to Participate is executed and dated as of the date first listed above.

By executing and delivering to the Department this 2009 Notice of Intent, the Undersigned now possesses an option to participate in the Purchase Program and the Participation Program.

The Undersigned asks that the Department of Education please direct all inquiries and correspondence relating to these programs to:

[UNDERSIGNED NAME AND LENDER ID NUMBER]
[ELIGIBLE LENDER TRUSTEE NAME OR BENEFICIAL HOLDER NAME, IF ANY AND LIDS]
[STREET ADDRESS]
[CITY], [STATE] [ZIP]
Attention of: [NAME],
[TITLE]
By Phone - [XXX-XXX-XXXX]
By Fax – [XXX-XXX-XXXX]
By E-mail – [email address]

[NAME OF ENTITY]

By:_____
Name:
Title:

The completed, signed, and dated Notice of Intent to Participate should be sent as a PDF attachment to an e-mail message addressed to ffel.agreementprocess@ed.gov. The e-mail message subject line should read "Submission of Notice of Intent to Participate." For questions concerning the submission and receipt of the email please call (202) 377-4401

[FR Doc. E9–712 Filed 1–14–09; 8:45 am]
BILLING CODE 4000–01–C

DEPARTMENT OF EDUCATION

National Institute on Disability and Rehabilitation Research—Notice of Proposed Long-Range Plan for Fiscal Years 2010–2014

AGENCY: Office of Special Education and Rehabilitative Services, Department of Education.

ACTION: Notice of proposed long-range plan for fiscal years 2010–2014.

SUMMARY: The Assistant Secretary for Special Education and Rehabilitative Services proposes the National Institute on Disability and Rehabilitation Research's (NIDRR's) Long-Range Plan (Plan) for fiscal years 2010 through 2014. Pursuant to section 202(h)(1) of the Rehabilitation Act of 1973, as amended, the Department is required to develop a plan for NIDRR that outlines NIDRR's priorities for rehabilitation research, demonstration projects, training, and related activities, and explains the basis for these priorities.

DATES: We must receive your comments on or before March 16, 2009.

ADDRESSES: Address all comments about the proposed Plan to Donna Nangle, U.S. Department of Education, 400 Maryland Avenue, SW., Room 6029, Potomac Center Plaza, Washington, DC 20202–2700. If you prefer to send your comments through the Internet, use the following address: *NIDRR-Mailbox@ed.gov.*

You must include the term ''Long-Range Plan'' in the subject line of your electronic message.

FOR FURTHER INFORMATION CONTACT: Donna Nangle. Telephone: (202) 245–7462 or by e-mail: *donna.nangle@ed.gov*.

If you use a telecommunications device for the deaf (TDD), call the Federal Relay Service (FRS), toll free, at 1–800–877–8339.

SUPPLEMENTARY INFORMATION:

Invitation to Comment: We invite you to submit comments regarding the proposed Plan. To ensure that your comments have maximum effect in developing the final Plan, we urge you to identify clearly the specific area of the Plan that each comment addresses and to arrange your comments in the same order as the proposed Plan.

During and after the comment period, you may inspect all public comments about the proposed Plan on our Web site, at: *http://www.ed.gov/about/offices/list/osers/nidrr/policy.html.*

Assistance to Individuals With Disabilities in Reviewing the Record: On request we will provide an appropriate accommodation or auxiliary aid to an individual with a disability who needs assistance to review the comments or other documents in the public rulemaking record for this proposed Plan. If you want to schedule an appointment for this type of accommodation or auxiliary aid, please contact the person listed under **FOR FURTHER INFORMATION CONTACT**.

Background: In developing the research agenda in the proposed Plan, NIDRR considered: the legislative mandate for the Plan; consumer goals (as documented, for example, in public input on preparation of this Plan received via e-mail, the Web, and in a national teleconference in response to a notice published in the **Federal Register** and an e-mail solicitation inviting comment on the Plan); and scientific advances documented through state of the science conferences and literature.

The purposes of the proposed Plan are:

(1) To describe the broad general principles that will guide NIDRR's policies and use of resources;

(2) To establish objectives for research and related activities from which annual research priorities can be formulated; and

(3) To describe how NIDRR will operationalize the Plan, *i.e.*, the process by which NIDRR establishes annual priorities.

The authority for the Secretary to establish the Plan is contained in section 202(h) of the Rehabilitation Act of 1973, as amended (29 U.S.C. 762(h)).

The proposed Plan is published as an attachment to this notice.

Accessible Format: Individuals with disabilities can obtain this document in an accessible format (*e.g.*, braille, large print, audiotape, or computer diskette) on request to the contact person listed under **FOR FURTHER INFORMATION CONTACT**.

Electronic Access to This Document: You can view this document, as well as all other documents of this Department published in the **Federal Register**, in text or Adobe Portable Document Format (PDF) on the Internet at the following site: *http://www.ed.gov/news/fedregister.*

To use PDF you must have Adobe Acrobat Reader, which is available free at this site. If you have questions about using PDF, call the U.S. Government Printing Office (GPO), toll free, at 1–888–293–6498; or in the Washington, DC, area at (202) 512–1530.

Note: The official version of this document is the document published in the **Federal Register**. Free Internet access to the official edition of the **Federal Register** and the Code of Federal Regulations is available on GPO Access at: *http://www.gpoaccess.gov/nara/index.html.*

Dated: January 9, 2009.

Tracy R. Justesen,

Assistant Secretary for Special Education and Rehabilitative Services.

National Institute on Disability and Rehabilitation Research: Long-Range Plan (Plan) for Fiscal Years (FYs) 2010–2014

I. Introduction

NIDRR's mission is to support research and related activities to generate new knowledge and promote its effective use in order to improve the lives of individuals with disabilities and their opportunities for full participation in society. The Plan presents goals, objectives, and strategies for NIDRR research investments for FYs 2010 through 2014 that are aligned with this mission and that may be implemented through funding priorities.

Statutory Mandate

NIDRR was established by the 1978 amendments to the Rehabilitation Act of 1973, as amended (Act). As specified in section 200 of the Act (29 U.S.C. 760), NIDRR's role is to: (a) Support research, demonstration projects, training, and related activities to maximize the full inclusion and integration into society, employment, independent living, family support, and economic and social self-sufficiency of individuals with disabilities of all ages; (b) provide for a comprehensive and coordinated approach to the support and conduct of research, demonstration projects, training, and related activities; (c) promote the transfer of rehabilitation technology; (d) ensure the widespread distribution of practical scientific and technological information; and (e) increase opportunities for researchers who are members of minority groups and researchers who are individuals with disabilities.

NIDRR implements its statutory mandate by supporting research and development projects to generate new knowledge and products, along with supporting knowledge translation and capacity building activities. *Research and development* are supported through a variety of program mechanisms described later in this document. *Knowledge translation* is a process of ensuring that new knowledge and products gained through research and development will ultimately be used to improve the lives of individuals with disabilities and further their

participation in society. Knowledge translation is built upon and sustained by ongoing interactions, partnerships, and collaborations among various stakeholders, including researchers, practitioners, policy-makers, persons with disabilities, and others, in the production and use of such knowledge and products. *Capacity building* refers to building the infrastructure and increasing individual capability necessary to carry out relevant research and development.

NIDRR is administered within the Office of Special Education and Rehabilitative Services (OSERS) at the U.S. Department of Education. OSERS has two other components—the Rehabilitation Services Administration (RSA) and the Office of Special Education Programs (OSEP). RSA administers the State-Federal Vocational Rehabilitation program, the American Indian Vocational Rehabilitation Services program, the Assistive Technology State Grants program, Independent Living programs, and related programs. OSEP administers the Individuals with Disabilities Education Act (IDEA).

NIDRR works closely with other offices at the U.S. Department of Education, both within OSERS and throughout the agency. Furthermore, NIDRR has developed extensive linkages to the broader disability and rehabilitation research community through the Interagency Committee on Disability Research (ICDR), and through the development of significant partnerships with many Federal agencies, research institutions, businesses, employers, and consumer organizations.

NIDRR's Unique Role

Individuals with disabilities face daunting challenges in employment, housing, public accommodations and services, education, transportation, communications, recreation, health services, and civic participation. To maximize its effectiveness in addressing these and other challenges facing individuals with disabilities, NIDRR focuses on the whole person, whose ability to function and whose quality of life are dependent on the complex interaction of personal, societal, and environmental factors.

NIDRR's budget represents the largest single Federal investment in disability and rehabilitation research. Unlike other Federal research entities that support prevention, treatment, and acute rehabilitation research, NIDRR supports rehabilitation research that is more closely tied to longer term outcomes such as independence, community participation, and employment.

NIDRR's unique role in supporting rehabilitation research and development activities that are distinct from the research supported by other agencies also can be understood within the context of the World Health Organization's International Classification of Functioning, Disability, and Health (ICF) (World Health Organization, 2001). The ICF is a framework for classifying disability and health along a continuum from body function and structure to activities [1] and participation,[2] in the context of environment and personal factors. The ICF is useful to explain NIDRR's role in the context of the overall field of Federal disability and rehabilitation research. Specifically, NIDRR's role is to support activities that increase the self-determination and participation of individuals with disabilities in the home, community, school, and workplace. To fulfill this role, NIDRR supports research that explores the interaction of individual characteristics and environmental factors and their effects on the participation of individuals with disabilities in these settings. NIDRR also supports a wide range of rehabilitation engineering development activities, many of which lead to the manufacture and commercialization of products to enhance function or enable individuals to live and work more independently.

NIDRR Accomplishments

Over the span of its 30-year history, NIDRR's efforts in research and development, capacity building, and knowledge translation have resulted in advances in knowledge, changes in practice and policy, and the manufacturing of products that have improved the lives of individuals with disabilities and their families. Some of NIDRR's key achievements include supporting efforts that led to the following:

- Developing and advancing innovative practices in the fields of disability and rehabilitation, including universal design, identification of new types of disabilities, measurement of participation in valued life activities, identification of the effects of the environment on the function of people with disabilities, and the treatment and documentation of secondary conditions for individuals with disabilities.
- Establishing new standards of integrated care for individuals with spinal cord injury, traumatic brain injury, and burn injury through the model systems programs.
- Developing environmental accommodations such as closed captioning and accessible computer software.
- Developing assistive technology and design features to make everyday products accessible to individuals with disabilities, including products marketed by companies such as AOL, Microsoft, Hewlett-Packard (HP), Black & Decker, and Whirlpool.
- Improving national disability data and statistics by supporting analysis of major national sources of disability data and promoting data collection methods that include respondents with disabilities.
- Contributing to improved policies for individuals with disabilities in healthcare, independent living, employment, communications, and transportation.

II. Need for Employment Focus

Improving employment outcomes for individuals with disabilities has been a central research focus within NIDRR since its formation in 1978, and remains a major challenge today. However, there is a pressing need for additional research to improve access to appropriate employment, retention of employment, and career advancement for individuals with disabilities. Research is needed to help identify facilitators of employment for individuals with disabilities as well as ways to overcome barriers to employment.

Employment Status of and Trends for Individuals With Disabilities

Employment is the key to economic self-sufficiency. In addition, it facilitates social participation, provides personal identity, and ultimately contributes to satisfaction with life (National Council on Disability, 2007). However, the employment prospects of the 22.4 million (U.S. Census Bureau, 2006) individuals with disabilities lag behind other individuals, regardless of disability type and how employment status is characterized (see Table).

The aging of the population will be accompanied by an increase in the number of individuals with disabilities because individuals 45 and older experience a higher rate of disabilities than do younger individuals (Field and Jette, 2007, p. 17). Many of these individuals will continue to work past the age of 65.

[1] The World Health Organization, in the ICF, defines the term ''activities'' as ''the execution of a task or action by an individual.''

[2] The term ''participation'' is defined as ''involvement in a life situation.''

The changes described in the preceding paragraph and other demographic trends toward increases in disability may result in a substantial increase in the number of individuals with disabilities in the workforce. Even if the current prevalence of disability by age group does not increase over the next several decades, the proportion of the population with disabilities can be expected to rise from approximately 15 percent to nearly 20 percent as the population ages (American Community Survey, 2006).

Working age group	Employment rate [3]
Non-disabled individuals	78.1
Disabled individuals:	
Hispanics	39.0
All individuals with disabilities	37.8
Pacific Islanders	37.4
American Indians and Alaska Natives	32.4
African Americans	29.6

[3] These employment rates are based on U.S. Census Bureau (2006) calculations using the 2006 American Community Survey via the Census Bureau's DataFerret System.

The characteristics of individuals with disabilities seeking assistance to perform major life activities are changing as well. Many veterans of on-going conflicts between the United States and other countries are returning with disabilities. For example, from the beginning of Operation Iraqi Freedom in March 2003 through April 2008, 29,978 personnel have been wounded, and according to the Rand Corporation, approximately 40 percent of returning veterans sustained mild traumatic brain injury or post-traumatic stress disorder. Enabling these veterans to reenter the workforce has become an important issue for them and for the United States.

Among the working-age population with disabilities, U.S. Census data show that a large segment of this cohort is made up of individuals with long-term disabilities acquired at birth through early adulthood. Evidence from empirical studies funded by NIDRR indicates that many members of this cohort are at risk for new conditions and impairments that undermine their participation in valued life activities, and result in premature aging and premature retirement from the labor force compared to their non-disabled counterparts.

Improvements in health and function and community living are critical antecedents to improved employment for individuals with disabilities. New knowledge that prepares individuals with disabilities to work, maintain employment, and progress in a career can also benefit individuals who choose not to work or who are unable to work, to the extent that those individuals may wish to otherwise participate in their community. For example, a manual wheelchair user must be able to maintain good arm function to maintain mobility that may be needed for employment. However, improving arm function and mobility will assist the individual in other areas as well, including independent living and community participation.

The data and trends discussed above suggest just a few of the areas that need to be investigated to develop policy and practice recommendations to improve employment and economic security for individuals with disabilities. NIDRR has responded to this need by making the improvement of employment outcomes the focus of its long-range plan for FYs 2010–2014.

III. Strategic Focus

Focus of FYs 2010–2014 Long-Range Plan

To address the well-documented disparity in rates of employment for individuals with—as compared to individuals without—disabilities, NIDRR intends to invest in research and development to directly study workplace and workforce issues, other research activities that address health and function, rehabilitation, and technology barriers, which also affect participation and employment, and research to enhance the transition of students to postsecondary education and employment.

NIDRR proposes to use the goals, objectives, and strategies described in the following section to guide the development of grant priorities in the coming years. Focusing the Plan on employment and employment outcomes will not prevent NIDRR from continuing the work it is currently funding. NIDRR will maintain the broad array of mandated programs it currently supports (*e.g.*, the rehabilitation engineering research centers and the spinal cord injury model systems program) and, where possible, will establish a link between each new priority it funds through these programs and employment outcomes. For example, NIDRR might propose a priority for research to test interventions that reduce secondary conditions that have an impact on work attendance. By focusing on employment outcomes, NIDRR will address a critical area needed to improve the lives of individuals with disabilities and advance the work of RSA.

As in its previous Plan, NIDRR's three goals, discussed in the following section, focus on research and development, knowledge translation, and capacity building. NIDRR's conceptualization of the units of analysis for employment research has three levels—individual, employer, and systems. ICF makes a distinction between functioning and disability, on one hand, and environmental factors, on the other (World Health Organization, 2001). The individual level unit of analysis falls within the functioning and disability component. The employer and systems levels are two major aspects of the ICF's environmental factors. The employer level includes all environmental factors related to the workplace. The systems level includes all other environments outside the workplace, as well as policies influencing employment practices.

Goals

Research and Development

Advance knowledge related to disability and rehabilitation through research and development, with particular emphasis on improving employment and participation outcomes for individuals with disabilities.

Objective 1.1: Increase knowledge of the educational, training, and socioeconomic factors that serve as facilitators of or barriers to improved employment outcomes for individuals with disabilities by supporting research and development on:

Strategy 1.1.1: Improving job preparedness and skills, including

identification of the individual determinants of labor market success and the training and services needed to achieve success.

Strategy 1.1.2: Improving the hiring, retention, and promotion practices of employers.

Strategy 1.1.3: Identifying policy and systems changes that improve vocational training and services, reduce work disincentives, and increase employment opportunities and transitions across the lifecycle.

Objective 1.2: Increase knowledge of the health and function factors that serve as facilitators of or barriers to improved employment and participation outcomes by supporting research and development on:

Strategy 1.2.1: Reducing the occurrence of secondary disabling conditions, enhancing health and functional status, eliminating health disparities, and promoting wellness.

Strategy 1.2.2: Enhancing understanding of the health and wellness needs of employees with disabilities, and improving the quality and availability of health benefits, workplace supports, and disability management programs.

Strategy 1.2.3: Identifying policy and systems changes that improve access to health insurance and appropriate healthcare services, eliminating healthcare disparities, and increasing the availability and quality of health and wellness programs.

Objective 1.3: Increase understanding of environmental and community level factors that serve as facilitators of or barriers to improved employment and participation outcomes by supporting research and development on:

Strategy 1.3.1: Promoting self-determination and participation in social roles, reducing social isolation, enhance communication skills, and increasing independence and community living for individuals with disabilities.

Strategy 1.3.2: Identifying policy and systems changes that enhance self-determination and choice, support family caregiving and personal assistance services, and increase the availability of home and community-based services and supports that promote independence, safety and security, and community living.

Objective 1.4: Increase understanding of the assistive technology and environmental factors that serve as facilitators of or barriers to improved employment and participation outcomes by supporting research and development on:

Strategy 1.4.1: Increasing the use of assistive technologies that promote health and function, support self-determination and independence, enhance communication, reduce social isolation, and increase participation in the home, community, and workplace.

Strategy 1.4.2: Improving the availability, reducing the costs, and increasing the quality of workplace productivity enhancements, accommodations, and supports.

Strategy 1.4.3: Identifying policy and systems changes to increase the availability and affordability of assistive technologies and environmental adaptations that reduce barriers to employment, promote safety and security, and improve access to information technologies and opportunities for participation and community living.

Goal 2: Knowledge Translation

Increase the use of knowledge derived from NIDRR-funded research and development.

Objective 2.1: Increase understanding of models, methods, and strategies for knowledge translation in different settings and user groups.

Strategy 2.1.1: Advance understanding of barriers to and facilitators of knowledge translation.

Strategy 2.1.2: Investigate mechanisms for successful knowledge translation.

Strategy 2.1.3: Explore existing models, methods, and strategies from other fields that can be used to promote knowledge translation.

Objective 2.2: Optimize the scientific quality and relevance of knowledge derived from NIDRR-funded research and development projects.

Strategy 2.2.1: Include requirements in priorities that grantees optimize the relevance of knowledge for the intended users.

Strategy 2.2.2: Encourage the use of research designs and innovative methods that contribute to both scientific quality and relevance.

Objective 2.3: Increase the use of models, methods, and strategies for knowledge translation.

Strategy 2.3.1: Develop a knowledge translation model that sets forth NIDRR's desired knowledge translation outcomes, outputs, and measures with input and feedback from stakeholders.

Strategy 2.3.2: Promote the dissemination of knowledge generated through research and development by communicating in understandable language and formats that are accessible to all stakeholders, including policy makers.

Strategy 2.3.3: Optimize implementation of knowledge translation models, methods, and strategies by NIDRR grantees through effective professional development activities.

Goal 3: Capacity Building

Increase the capacity of institutions and individuals, particularly individuals with disabilities, to conduct high-quality disability and rehabilitation research and development.

Objective 3.1: Increase the capacity of institutions to conduct rigorous, scientifically based disability and rehabilitation research and development.

Strategy 3.1.1: Enhance the capacity of minority entities and Indian tribes to train disability researchers and to conduct high-quality disability and rehabilitation research and development.

Strategy 3.1.2: Encourage institutions involved in employment-related research to conduct research on employment of individuals with disabilities.

Strategy 3.1.3: Encourage institutions involved in disability research to focus on employment outcomes.

Strategy 3.1.4: Encourage institutions involved in disability research to focus on policy and systems issues that affect the participation and employment of individuals with disabilities.

Objective 3.2: Increase the number and capacity of individuals who conduct rigorous disability and rehabilitation research and development.

Strategy 3.2.1: Increase the participation of individuals with disabilities as researchers in NIDRR research and development.

Strategy 3.2.2: Enhance the ability of current researchers to conduct high-quality NIDRR research and development.

IV. Managing for Results

NIDRR Guiding Principles

In the pursuit of new knowledge to improve the lives and employment outcomes of individuals with disabilities, NIDRR will operate according to the following principles. These principles are essential to good stewardship of the public funds entrusted to NIDRR and to the provision of the maximum benefit to its primary stakeholders, individuals with disabilities.

- *Relevance.* NIDRR's research and development programs will respond to the needs of individuals with disabilities from diverse backgrounds and from underserved populations such as tribal nations, the needs of society,

the state of scientific knowledge and technological development, and the U.S. Department of Education's priorities in order to enable individuals with disabilities and their families across the lifespan to make informed choices.

• *Quality*. NIDRR will fund rigorous scientifically based research and development that uses appropriate methods, and will evaluate the results of these projects through an independent peer review process.

• *Multidisciplinary*. NIDRR will encourage collaborative multidisciplinary research and development, representing a broad array of relevant fields to strengthen the capacity to solve problems in a creative, collaborative, and rigorous manner.

• *Partnership*. NIDRR will accomplish its mission in partnership with its constituents, including, but not limited to, academics, practitioners, individuals with disabilities, families, industry, other Federal agencies, professional communities, disability organizations, and advocates.

Management Strategy

Managing NIDRR research programs and projects involves many aspects:

• Provision of a results-oriented planning environment;

• Development of grant priorities;

• Selection of the most appropriate funding mechanisms from those available to NIDRR;

• Adherence to sound management principles;

• Commitment to an independent and effective peer review process;

• Project monitoring and evaluation; and

• Interagency research collaboration.

At its core, managing for results is a philosophy and practice that depends upon the availability of accurate data. NIDRR remains committed to improving its collection, analysis, evaluation, and presentation of data provided by its grantees and contractors.

Program Mechanisms

NIDRR has nine primary grant mechanisms for awarding funds:

Rehabilitation Engineering Research Centers (RERCs) conduct programs of advanced engineering and technical research designed to apply technology, scientific achievement, and psychological and social knowledge to solve rehabilitation problems and remove environmental barriers. RERCs are affiliated with institutions of higher education or non-profit organizations.

Rehabilitation Research and Training Centers (RRTCs) conduct coordinated and integrated advanced research to alleviate or stabilize disabling conditions, promote maximum social and economic independence of individuals with disabilities, or improve rehabilitation methodology or service delivery systems. RRTCs operate in collaboration with institutions of higher education and providers of rehabilitation services and serve as national centers of excellence in rehabilitation research.

Disability and Rehabilitation Research Projects (DRRPs) emphasize research and development projects, training, and knowledge translation on rehabilitation topics. DRRPs also provide funding for the model system programs for spinal cord injury, traumatic brain injury, and burn injury. The model systems provide innovative systems of comprehensive rehabilitation to, and collect longitudinal data from, individuals with these injuries.

Disability Business Technical Assistance Centers (DBTACs) are funded as DRRPs to provide information, technical assistance, and training in areas related to disability policy through a national network of regionally-based centers that provides assistance to disability organizations, individuals with disabilities, businesses, public agencies, and the general public, and that will contribute to research on topics covered under the Americans with Disabilities Act of 1990.

Spinal Cord Injury Model Systems (SCIMS) are statutorily established to support a network of Centers with model care of individuals after spinal cord injury, carrying out research and dissemination activities. NIDRR also supports traumatic brain injury and burn model systems, but these are funded through the DRRP mechanism.

Field Initiated Projects provide funding to address rehabilitation issues in promising and innovative ways. As the name implies, topics for these projects are chosen by the applicants. Awards are based upon merit and potential impact on the field of rehabilitation.

Advanced Rehabilitation Research Training Projects provide funding to institutions of higher education to recruit qualified post-doctoral individuals with clinical, management, or basic research experience and prepare them to conduct research on disability and rehabilitation issues.

Research Fellowships (known as Switzer Fellowships) give individual researchers an opportunity to develop new ideas and gain research experience. Fellows design and work for one year on an independent research project.

Small Business Innovation Research (SBIR) grants, as administered by NIDRR as a part of the larger mandatory SBIR program, help support the production of new assistive and rehabilitation technology. This two-phase program takes a rehabilitation-related product from development to market readiness.

Peer Review Process

NIDRR funds are awarded competitively through a rigorous peer review process to ensure the integrity of the NIDRR research portfolio. Researchers, methodologists, rehabilitation engineers, and other experts, including individuals with disabilities, serve on three-to seven-member panels. These experts review the proposals against the selection criteria in the application package for the competition; these selection criteria include, for example, methodological rigor, responsiveness to needs, cost effectiveness, plan of evaluation, and staff quality. Over the years, improvements in this peer review process have worked to increase the scientific rigor of NIDRR's research portfolio and its responsiveness to the needs of the disability and rehabilitation community.

Monitoring and Evaluation

NIDRR has adopted a project monitoring process that involves regular contact between project officers and principal investigators to ensure that activities and staffing are carried out as proposed, problems are promptly addressed and resolved, and the projects remain on track to produce the intended outcomes and outputs.

NIDRR evaluates the outcomes of grantee research to judge project productivity, economic value, and end-user satisfaction. Measures of success vary by goal and topic. However, NIDRR continues to enhance its system for tracking interventions and measurement instruments developed by grantees. These tracking data, along with patent counts, verify outcomes of research conducted by NIDRR grantees. For example, systematic reviews or meta-analyses are used to evaluate aggregated research outcomes. Bibliographic analysis also is used to determine NIDRR's contribution to the knowledge base by measuring the extent to which NIDRR-supported research articles are cited in the peer-reviewed research literature.

These data-driven activities result in new NIDRR-sponsored deliverables including: an independent and external agency evaluation; profiles of different funding mechanisms; and products displayed in a variety of formats such as written materials, exhibits, or electronic media (*e.g.*, videoconferences, Webinars, or Podcasts). Equipped with

these products, stakeholders have a better understanding of what NIDRR does and what new information and products are available.

V. References

Carlson, D., & Ehrlich, N. (2005). *Assistive technology and information technology use and need by persons with disabilities in the United States, 2001*. Washington, DC: National Institute on Disability and Rehabilitation Research, U.S. Department of Education [On-line]. Available: *http://www.ed.gov/rschstat/research/pubs/at-use/at-use-2001.pdf*.

Erickson, Tammy. (2008). The Project-Based Workforce. *BusinessWeek*. January 31, 2008.

Field, M., & Jette, A.M. (Eds.). (2007). *The future of disability in America*. Washington, DC: The National Academies Press.

National Council on Disability. (2007). *Empowerment for Americans with disabilities: Breaking barriers to careers and full employment*. Washington, DC: Author.

National Institute on Disability and Rehabilitation Research. (2006). *Long-range plan for fiscal years 2005 through 2009 [On-line]*. Available: *http://www.ed.gov/legislation/FedRegister/other/2006–1/021506d.pdf*.

Ross, C.E, & Mirowsky, J. (1995). Does employment affect health? *Journal of Health and Social Behavior*, *36*(3), 230–243.

United States Census Bureau. (2006). *Calculations using the 2006 American Community Survey via the Census Bureau's DataFerret System*. American Community Survey. Available: *http://www.census.gov/hhes/www/disability/2006acs.html*.

World Health Organization. (2001). *ICF: International classification of functioning, disability and health*. Geneva: Author.

[FR Doc. E9–741 Filed 1–14–09; 8:45 am]

BILLING CODE 4000–01–P

DEPARTMENT OF EDUCATION

Office of Innovation and Improvement; Overview Information: State Charter School Facilities Incentive Grants Program; Notice Inviting Applications for New Awards for Fiscal Year (FY) 2009

Catalog of Federal Domestic Assistance (CFDA) Number: 84.282D.

DATES: *Applications Available:* January 15, 2009.

Deadline for Transmittal of Applications: July 1, 2009.

Deadline for Intergovernmental Review: August 31, 2009.

Full Text of Announcement

I. Funding Opportunity Description

Purpose of Program: This program provides grants to eligible States to help them establish or enhance, and administer, per-pupil facilities aid programs for charter schools. States eligible for these grants are those with per-pupil aid programs that assist charter schools with their school facility costs.

Priorities: In accordance with 34 CFR 75.105(b)(2)(ii), these priorities are from the regulations for this program (34 CFR 226.13 and 226.14).

Competitive Preference Priorities: For FY 2009 and any subsequent year in which we make awards from the list of unfunded applicants from this competition, these priorities are competitive preference priorities. Under 34 CFR 75.105(c)(2)(i) we award up to an additional 40 points to an application, depending on how well the application meets these priorities.

These priorities are:

Competitive Preference Priority 1. The Secretary will award up to 20 points to an application under competitive preference priority 1. The applicant must meet all of the following requirements ((a) through (d)) in order to receive the full 20 points. The requirements are:

(a) *Periodic Review and Evaluation.*

The State provides for periodic review and evaluation by the authorized public chartering agency of each charter school at least once every five years unless required more frequently by State law, to determine whether the charter school is meeting the terms of the school's charter and is meeting or exceeding the student academic performance requirements and goals for charter schools as set forth under State law or the school's charter.

(b) *Number of High-Quality Charter Schools.*

The State has demonstrated progress in increasing the number of high-quality charter schools that are held accountable in the terms of the schools' charters for meeting clear and measurable objectives for the educational progress of the students attending the schools, in the period prior to the period for which the State applies for a grant under this competition.

(c) *One Authorized Public Chartering Agency Other than an LEA, or an Appeals Process.*

The State—

(1) Provides for one authorized public chartering agency that is not a local educational agency (LEA), such as a State chartering board, for each individual or entity seeking to operate a charter school pursuant to State law; or

(2) In the case of a State in which LEAs are the only authorized public chartering agencies, allows for an appeals process for the denial of an application for a charter school.

(d) *High Degree of Autonomy.*

The State ensures that each charter school has a high degree of autonomy over the charter school's budgets and expenditures.

Competitive Preference Priority 2. The Secretary may award up to 10 points to an application under a competitive preference priority regarding the capacity of charter schools to offer public school choice in those communities with the greatest need for this choice based on—

(1) The extent to which the applicant would target services to geographic areas in which a large proportion or number of public schools have been identified for improvement, corrective action, or restructuring under title I of the Elementary and Secondary Education Act of 1965 (ESEA), as amended by the No Child Left Behind Act of 2001 (NCLB), 20 U.S.C. 7221a(e);

(2) The extent to which the applicant would target services to geographic areas in which a large proportion of students perform poorly on State academic assessments; and

(3) The extent to which the applicant would target services to communities with large proportions of low-income students.

Competitive Preference Priority 3. The Secretary may award up to 10 points to an application under a competitive preference priority for applicants that have not previously received a grant under the program.

Program Authority: 20 U.S.C. 7221d(b).

Applicable Regulations: (a) The Education Department General Administrative Regulations (EDGAR) in 34 CFR parts 74, 75, 77, 79, 80, 81, 82, 84, 85, 97, 98, and 99. (b) The regulations for this program in 34 CFR part 226.

Note: The regulations in 34 CFR part 79 apply to all applicants except federally recognized Indian tribes.

II. Award Information

Type of Award: Discretionary grants.

Estimated Available Funds: The Administration has requested $14,782,000 for new awards for this program for FY 2009. The actual level of funding, if any, depends on final congressional action. However, we are inviting applications to allow enough time to complete the grant process before the end of the current fiscal year,

if Congress appropriates funds for this program.

Contingent upon the availability of funds and the quality of applications, we may make additional awards in FY 2010 from the list of unfunded applications from this competition.

Estimated Range of Awards: $2,000,000–$10,000,000.

Estimated Average Size of Awards: $3,695,500.

Estimated Number of Awards: 4.

Note: The Department is not bound by any estimates in this notice.

Project Period: Up to 60 months.

III. Eligibility Information

1. *Eligible Applicants:* States that have enacted a State law authorizing per-pupil facilities aid for charter schools.

2. a. *Cost Sharing or Matching:* Under section 5205(b)(2)(C) of the ESEA, as amended by the NCLB, States, or parties that are closely collaborating with them, are required to provide matching funds. The minimum non-Federal share of the total cost of the project increases each year of the grant, from 10 percent the first year to 80 percent in the fifth year.

Applicants that are initially selected to receive grants will not receive grant funds unless they demonstrate, by July 15, 2009, that they will be able to fund the non-Federal share of the matching funds required under this program. The Department reserves the right to reject an application if an initial recipient does not demonstrate that it will have the required non-Federal funding by this date.

b. *Supplement-Not-Supplant:* This program involves supplement-not-supplant funding requirements under section 5205(b)(3)(C) of the ESEA (20 U.S.C. 7221d(b)(3)(C)).

Funds under this program must be used to supplement, and not supplant, State and local public funds expended to provide per pupil facilities aid programs, operations, financing programs, or other programs, for charter schools. Therefore, the Federal funds provided under this program, as well as the matching funds provided by the grantee, must be in addition to the State and local funds that would otherwise be used for this purpose in the absence of this Federal program. The Department generally considers that State and local funds would be available for this purpose at least in the amount of the funds that was available in the preceding comparison year and that the Federal funds and matching funds under this program would supplement that amount.

3. *Other:* The charter schools that a grantee selects to benefit from this program must meet the definition of a charter school, as defined in the Charter Schools Program authorizing statute in section 5210(1) of the ESEA. The definitions of *charter school* and *authorized public chartering agency* are in the application package.

IV. Application and Submission Information

1. *Address To Request Application Package:* Valarie Perkins, U.S. Department of Education, 400 Maryland Avenue, SW., room 4W258, Washington, DC 20202–5970. Telephone: (202) 260–1924 or by e-mail: *Valarie.Perkins@ed.gov.*

If you use a telecommunications device for the deaf (TDD), call the Federal Relay Service (FRS), toll free, at 1–800–877–8339.

Individuals with disabilities can obtain a copy of the application package in an accessible format (*e.g.*, braille, large print, audiotape, or computer diskette) by contacting the program contact person listed in this section.

2. *Content and Form of Application Submission:* Requirements concerning the content of an application, together with the forms you must submit, are in the application package for this program.

Page Limit: We have found that reviewers are able to conduct the highest-quality review when applications are concise and easy to read. Applicants are encouraged to limit their applications to no more than 30 double-spaced pages (not including the required forms and tables), to use a 12-point or larger-size font with one-inch margins at the top, bottom, and both sides, and to number pages consecutively. Furthermore, applicants are strongly encouraged to include a table of contents that specifies where each required part of the application is located.

3. *Submission Dates and Times:*

Applications Available: January 15, 2009.

Deadline for Transmittal of Applications: July 1, 2009.

Applications for grants under this program must be submitted electronically using the Grants.gov Apply site (Grants.gov). For information (including dates and times) about how to submit your application electronically, or in paper format by mail or hand delivery if you qualify for an exception to the electronic submission requirement, please refer to section IV.6. *Other Submission Requirements* of this notice.

We do not consider an application that does not comply with the deadline requirements.

Individuals with disabilities who need an accommodation or auxiliary aid in connection with the application process should contact the person listed under **FOR FURTHER INFORMATION CONTACT** in section VII of this notice. If the Department provides an accommodation or auxiliary aid to an individual with a disability in connection with the application process, the individual's application remains subject to all other requirements and limitations in this notice.

Deadline for Intergovernmental Review: August 31, 2009.

4. *Intergovernmental Review:* This program is subject to Executive Order 12372 and the regulations in 34 CFR part 79. Information about Intergovernmental Review of Federal Programs under Executive Order 12372 is in the application package for this program.

5. *Funding Restrictions:* We specify unallowable costs in 34 CFR 75.533. We reference additional regulations outlining funding restrictions in the *Applicable Regulations* section of this notice.

6. *Other Submission Requirements:* Applications for grants under this program must be submitted electronically unless you qualify for an exception to this requirement in accordance with the instructions in this section.

a. *Electronic Submission of Applications.*

Applications for grants under the State Charter School Facilities Incentive Grants Program, CFDA number 84.282D, must be submitted electronically using the Governmentwide Grants.gov Apply site at *www.Grants.gov.* Through this site, you will be able to download a copy of the application package, complete it offline, and then upload and submit your application. You may not e-mail an electronic copy of a grant application to us.

We will reject your application if you submit it in paper format unless, as described elsewhere in this section, you qualify for one of the exceptions to the electronic submission requirement *and* submit, no later than two weeks before the application deadline date, a written statement to the Department that you qualify for one of these exceptions. Further information regarding calculation of the date that is two weeks before the application deadline date is provided later in this section under *Exception to Electronic Submission Requirement.*

You may access the electronic grant application for State Charter School Facilities Incentive Grants Program at

www.Grants.gov. You must search for the downloadable application package for this program by the CFDA number. Do not include the CFDA number's alpha suffix in your search (*e.g.* , search for 84.282, not 84.282D).

Please note the following:

• When you enter the Grants.gov site, you will find information about submitting an application electronically through the site, as well as the hours of operation.

• Applications received by Grants.gov are date and time stamped. Your application must be fully uploaded and submitted and must be date and time stamped by the Grants.gov system no later than 4:30:00 p.m., Washington, DC time, on the application deadline date. Except as otherwise noted in this section, we will not accept your application if it is received—that is, date and time stamped by the Grants.gov system—after 4:30:00 p.m., Washington, DC time, on the application deadline date. We do not consider an application that does not comply with the deadline requirements. When we retrieve your application from Grants.gov, we will notify you if we are rejecting your application because it was date and time stamped by the Grants.gov system after 4:30:00 p.m., Washington, DC time, on the application deadline date.

• The amount of time it can take to upload an application will vary depending on a variety of factors, including the size of the application and the speed of your Internet connection. Therefore, we strongly recommend that you do not wait until the application deadline date to begin the submission process through Grants.gov.

• You should review and follow the Education Submission Procedures for submitting an application through Grants.gov that are included in the application package for this program to ensure that you submit your application in a timely manner to the Grants.gov system. You can also find the Education Submission Procedures pertaining to Grants.gov at *http://e-Grants.ed.gov/help/GrantsgovSubmissionProcedures.pdf.*

• To submit your application via Grants.gov, you must complete all steps in the Grants.gov registration process (see *www.grants.gov/applicants/get_registered.jsp*). These steps include (1) registering your organization, a multi-part process that includes registration with the Central Contractor Registry (CCR); (2) registering yourself as an Authorized Organization Representative (AOR); and (3) getting authorized as an AOR by your organization. Details on these steps are outlined in the Grants.gov 3-Step Registration Guide (see *http://www.grants.gov/section910/Grants.govRegistrationBrochure.pdf*). You also must provide on your application the same D–U–N–S Number used with this registration. Please note that the registration process may take five or more business days to complete, and you must have completed all registration steps to allow you to submit successfully an application via Grants.gov. In addition you will need to update your CCR registration on an annual basis. This may take three or more business days to complete.

• You will not receive additional point value because you submit your application in electronic format, nor will we penalize you if you qualify for an exception to the electronic submission requirement, as described elsewhere in this section, and submit your application in paper format.

• You must submit all documents electronically, including all information you typically provide on the following forms: Application for Federal Assistance (SF 424), the Department of Education Supplemental Information for SF 424, Budget Information—Non-Construction Programs (ED 524), and all necessary assurances and certifications.

• You must attach any narrative sections of your application as files in a .DOC (document), .RTF (rich text), or .PDF (Portable Document) format. If you upload a file type other than the three file types specified in this paragraph or submit a password-protected file, we will not review that material.

• Your electronic application must comply with any page-limit requirements described in this notice.

• After you electronically submit your application, you will receive from Grants.gov an automatic notification of receipt that contains a Grants.gov tracking number. (This notification indicates receipt by Grants.gov only, not receipt by the Department.) The Department then will retrieve your application from Grants.gov and send a second notification to you by e-mail. This second notification indicates that the Department has received your application and has assigned your application a PR/Award number (an ED-specified identifying number unique to your application).

• We may request that you provide us original signatures on forms at a later date.

Application Deadline Date Extension in Case of Technical Issues With the Grants.gov System: If you are experiencing problems submitting your application through Grants.gov, please contact the Grants.gov Support Desk, toll free, at 1–800–518–4726. You must obtain a Grants.gov Support Desk Case Number and must keep a record of it.

If you are prevented from electronically submitting your application on the application deadline date because of technical problems with the Grants.gov system, we will grant you an extension until 4:30:00 p.m., Washington, DC time, the following business day to enable you to transmit your application electronically or by hand delivery. You also may mail your application by following the mailing instructions described elsewhere in this notice.

If you submit an application after 4:30:00 p.m., Washington, DC time, on the application deadline date, please contact the person listed under **FOR FURTHER INFORMATION CONTACT** in section VII of this notice and provide an explanation of the technical problem you experienced with Grants.gov, along with the Grants.gov Support Desk Case Number. We will accept your application if we can confirm that a technical problem occurred with the Grants.gov system and that that problem affected your ability to submit your application by 4:30:00 p.m., Washington, DC time, on the application deadline date. The Department will contact you after a determination is made on whether your application will be accepted.

Note: The extensions to which we refer in this section apply only to the unavailability of, or technical problems with, the Grants.gov system. We will not grant you an extension if you failed to fully register to submit your application to Grants.gov before the application deadline date and time or if the technical problem you experienced is unrelated to the Grants.gov system.

Exception to Electronic Submission Requirement: You qualify for an exception to the electronic submission requirement, and may submit your application in paper format, if you are unable to submit an application through the Grants.gov system because—

• You do not have access to the Internet; or

• You do not have the capacity to upload large documents to the Grants.gov system; *and*

• No later than two weeks before the application deadline date (14 calendar days or, if the fourteenth calendar day before the application deadline date falls on a Federal holiday, the next business day following the Federal holiday), you mail or fax a written statement to the Department, explaining which of the two grounds for an exception prevent you from using the Internet to submit your application.

If you mail your written statement to the Department, it must be postmarked

no later than two weeks before the application deadline date. If you fax your written statement to the Department, we must receive the faxed statement no later than two weeks before the application deadline date.

Address and mail or fax your statement to: Valarie Perkins, U.S. Department of Education, 400 Maryland Avenue, SW., room 4W258, Washington, DC 20202–5970. FAX: (202) 205–5630.

Your paper application must be submitted in accordance with the mail or hand delivery instructions described in this notice.

b. *Submission of Paper Applications by Mail.*

If you qualify for an exception to the electronic submission requirement, you may mail (through the U.S. Postal Service or a commercial carrier) your application to the Department. You must mail the original and two copies of your application, on or before the application deadline date, to the Department at the following address:

U.S. Department of Education,
Application Control Center,
Attention: (CFDA Number 84.282D)
LBJ Basement Level 1, 400 Maryland Avenue, SW., Washington, DC 20202–4260.

You must show proof of mailing consisting of one of the following:

(1) A legibly dated U.S. Postal Service postmark.

(2) A legible mail receipt with the date of mailing stamped by the U.S. Postal Service.

(3) A dated shipping label, invoice, or receipt from a commercial carrier.

(4) Any other proof of mailing acceptable to the Secretary of the U.S. Department of Education.

If you mail your application through the U.S. Postal Service, we do not accept either of the following as proof of mailing:

(1) A private metered postmark.

(2) A mail receipt that is not dated by the U.S. Postal Service.

If your application is postmarked after the application deadline date, we will not consider your application.

Note: The U.S. Postal Service does not uniformly provide a dated postmark. Before relying on this method, you should check with your local post office.

c. *Submission of Paper Applications by Hand Delivery.*

If you qualify for an exception to the electronic submission requirement, you (or a courier service) may deliver your paper application to the Department by hand. You must deliver the original and two copies of your application by hand, on or before the application deadline date, to the Department at the following address:

U.S. Department of Education,
Application Control Center,
Attention: (CFDA Number 84.282D)
550 12th Street, SW., Room 7041,
Potomac Center Plaza, Washington,
DC 20202–4260.

The Application Control Center accepts hand deliveries daily between 8:00 a.m. and 4:30:00 p.m., Washington, DC time, except Saturdays, Sundays, and Federal holidays.

Note for Mail or Hand Delivery of Paper Applications: If you mail or hand deliver your application to the Department—

(1) You must indicate on the envelope and—if not provided by the Department—in Item 11 of the SF 424 the CFDA number, including suffix letter, if any, of the competition under which you are submitting your application; and

(2) The Application Control Center will mail to you a notification of receipt of your grant application. If you do not receive this notification within 15 business days from the application deadline date, you should call the U.S. Department of Education Application Control Center at (202) 245–6288.

V. Application Review Information

1. *Selection Criteria:* The selection criteria for this program are from the program regulations in 34 CFR 226.12. The maximum score for all of the selection criteria is 100 points. The maximum score for each criterion is indicated in parentheses. Each criterion also includes the factors that the reviewers will consider to determine how well an application meets the criterion. We encourage applicants to make explicit connections to the selection criteria and factors in their applications.

(a) *Need for facility funding* (30 points).

(1) The need for per-pupil charter school facility funding in the State.

(2) The extent to which the proposal meets the need to fund charter school facilities on a per-pupil basis.

(b) *Quality of plan* (30 points).

(1) The likelihood that the proposed grant project will result in the State either retaining a new per-pupil facilities aid program or continuing to enhance such a program without the total amount of assistance (State and Federal) declining over a five-year period.

(2) The flexibility charter schools have in their use of facility funds for the various authorized purposes.

(3) The quality of the plan for identifying charter schools and determining their eligibility to receive funds.

(4) The per-pupil facilities aid formula's ability to target resources to charter schools with the greatest need and the highest proportions of students in poverty.

(5) For projects that plan to reserve funds for evaluation, the quality of the applicant's plan to use grant funds for this purpose.

(6) For projects that plan to reserve funds for technical assistance, dissemination, or personnel, the quality of the applicant's plan to use grant funds for these purposes.

(c) *The grant project team* (15 points).

(1) The qualifications, including relevant training and experience, of the project manager and other members of the grant project team, including employees not paid with grant funds, consultants, and subcontractors.

(2) The adequacy and appropriateness of the applicant's staffing plan for the grant project.

(d) *The budget* (15 points).

(1) The extent to which the requested grant amount and the project costs are reasonable in relation to the objectives, design, and potential significance of the proposed grant project.

(2) The extent to which the costs are reasonable in relation to the number of students served and to the anticipated results and benefits.

(3) The extent to which the non-Federal share exceeds the minimum percentages (which are based on the percentages under section 5205(b)(2)(C) of the ESEA), particularly in the initial years of the program.

(e) *State experience* (10 points).

The experience of the State in addressing the facility needs of charter schools through various means, including providing per-pupil aid, access to State loan or bonding pools, and the use of Qualified Zone Academy Bonds.

2. *Review and Selection Process:* Additional factors we consider in selecting an application for an award are in 34 CFR 226.13 and 226.14.

Note: As described in 34 CFR 226.14(c), the Secretary may elect to consider the points awarded under the competitive preference priorities only for proposals that exhibit sufficient quality to warrant funding under the selection criteria.

VI. Award Administration Information

1. *Award Notices:* If your application is successful, we notify your U.S. Representative and U.S. Senators and send you a Grant Award Notification (GAN). We may notify you informally, also.

If your application is not evaluated or not selected for funding, we notify you.

2. *Administrative and National Policy Requirements:* We identify administrative and national policy requirements in the application package and reference these and other requirements in the *Applicable Regulations* section of this notice.

We reference the regulations outlining the terms and conditions of an award in the *Applicable Regulations* section of this notice and include these and other specific conditions in the GAN. The GAN also incorporates your approved application as part of your binding commitments under the grant.

3. *Reporting:* At the end of your project period, you must submit a final performance report, including financial information, as directed by the Secretary. If you receive a multi-year award, you must submit an annual performance report that provides the most current performance and financial expenditure information as directed by the Secretary under 34 CFR 75.118. The Secretary may also require more frequent performance reports under 34 CFR 75.720(c).

4. *Performance Measures:* The performance measure for this program is the ratio of funds leveraged by States for charter school facilities to funds awarded by the Department under the State Charter School Facilities Incentive Program.

VII. Agency Contacts

FOR FURTHER INFORMATION CONTACT: Valarie Perkins or Ann Margaret Galiatsos, U.S. Department of Education, 400 Maryland Avenue, SW., room 4W258, Washington, DC 20202–5970. Telephone: (202) 260–1924 or by e-mail: *charter.facilities@ed.gov.*

If you use a TDD, call the FRS, toll free, at 1–800–877–8339.

VIII. Other Information

Accessible Format: Individuals with disabilities can obtain this document and a copy of the application package in an accessible format (*e.g.*, braille, large print, audiotape, or computer diskette) on request to the program contact persons listed under **FOR FURTHER INFORMATION CONTACT** in section VII of this notice.

Electronic Access to This Document: You can view this document, as well as all other documents of this Department published in the **Federal Register**, in text or Adobe Portable Document Format (PDF) on the Internet at the following site: *http://www.ed.gov/news/fedregister.*

To use PDF you must have Adobe Acrobat Reader, which is available free at this site. If you have questions about using PDF, call the U.S. Government Printing Office (GPO), toll free, at 1–888–293–6498; or in the Washington, DC, area at (202) 512–1530.

Note: The official version of this document is the document published in the **Federal Register**. Free Internet access to the official edition of the **Federal Register** and the Code of Federal Regulations is available on GPO Access at: *http://www.gpoaccess.gov/nara/index.html.*

Dated: January 9, 2009.

Amanda L. Farris,

Assistant Deputy Secretary for Innovation and Improvement.

[FR Doc. E9–772 Filed 1–14–09; 8:45 am]

BILLING CODE 4000–01–P

DEPARTMENT OF EDUCATION

Office of Innovation and Improvement; Women's Educational Equity Act Program

Catalog of Federal Domestic Assistance (CFDA) Number: 84.083A.

ACTION: Notice inviting applications for new awards for fiscal year (FY) 2009; correction.

SUMMARY: The Department of Education is correcting the notice inviting applications for new awards for FY 2009 for the Women's Educational Equity Act Program (WEEA) that was published in the **Federal Register** on January 2, 2009 (74 FR 101). On page 105, in the third column, second line, the e-mail address is corrected to read ''*oii.weea@ed.gov.*''

FOR FURTHER INFORMATION CONTACT: Beverly A. Farrar, U.S. Department of Education, 400 Maryland Avenue, SW., Room 4W242, Washington, DC 20202–5950. *Telephone:* (202) 205–3145.

If you use a telecommunications device for the deaf (TDD), call the Federal Relay Service (FRS), toll free, at 1–800–877–8339.

Individuals with disabilities can obtain this document in an accessible format (e.g., braille, large print, audiotape, or computer diskette) on request to the contact person listed under this section.

Electronic Access to This Document: You can view this document, as well as all other documents of this Department published in the **Federal Register**, in text or Adobe Portable Document Format (PDF) on the Internet at the following site: *http://www.ed.gov/news/fedregister.*

To use PDF you must have Adobe Acrobat Reader, which is available free at this site. If you have questions about using PDF, call the U.S. Government Printing Office (GPO), toll free, at 1–888–293–6498; or in the Washington, DC, area at (202) 512–1530.

Note: The official version of this document is the document published in the **Federal Register**. Free Internet access to the official edition of the **Federal Register** and the Code of Federal Regulations is available on GPO Access at: *http://www.gpoaccess.gov/nara/index.html.*

Dated: January 8, 2009.

Amanda L. Farris,

Assistant Deputy Secretary for Innovation and Improvement.

[FR Doc. E9–744 Filed 1–14–09; 8:45 am]

BILLING CODE 4000–01–P

DEPARTMENT OF ENERGY

Federal Energy Regulatory Commission

[Docket No. IC09–587–000]

Commission Information Collection Activities (FERC–587); Comment Request; Extension

January 9, 2009.

AGENCY: Federal Energy Regulatory Commission, DOE.

ACTION: Notice of proposed information collection and request for comments.

SUMMARY: In compliance with the requirements of section 3506(c) (2) (a) of the Paperwork Reduction Act of 1995 (Pub. L. No. 104–13), the Federal Energy Regulatory Commission (Commission) is soliciting public comment on the specific aspects of the information collection described below.

DATES: Comments in consideration of the collection of information are due Monday, March 23, 2009.

ADDRESSES: An example of this collection of information may be obtained from the Commission's Web site (at *http://www.ferc.gov/docs-filing/elibrary.asp*). Comments may be filed either electronically or in paper format, and should refer to Docket No. IC09–587–000. Documents must be prepared in an acceptable filing format and in compliance with the Federal Energy Regulatory Commission submission guidelines at *http://www.ferc.gov/help/submission-guide.asp.*

Comments may be filed electronically via the eFiling link on the Commission's Web site at *http://www.ferc.gov.* First time users will have to establish a user name and password (*http://www.ferc.gov/docs-filing/eregistration.asp*) before eFiling. The Commission will send an automatic acknowledgement to the sender's e-mail address upon receipt of comments through eFiling.

Commenters filing electronically should not make a paper filing. Commenters that are not able to file electronically must send an original and 14 copies of their comments to: Federal Energy Regulatory Commission, Secretary of the Commission, 888 First Street, NE., Washington, DC 20426.

Users interested in receiving automatic notification of activity in this docket may do so through eSubscription (at *http://www.ferc.gov/docs-filing/esubscription.asp*). In addition, all comments and FERC issuances may be viewed, printed or downloaded remotely through FERC's Web site using the ''eLibrary'' link and searching on Docket Number IC09–587. For user assistance, contact FERC Online Support (e-mail at *ferconlinesupport@ferc.gov*, or call toll-free at (866) 208–3676, or for TTY, contact (202) 502–8659).

FOR FURTHER INFORMATION CONTACT: Michael Miller may be reached by telephone at (202) 502–8415, by fax at (202) 273–0873, and by e-mail at *michael.miller@ferc.gov*.

SUPPLEMENTARY INFORMATION: The FERC uses the FERC Form No. 587 (''Land Description (Public Land States/Non-Public Land States (Rectangular or Non-Rectangular Survey System Lands in Public Land States))''; OMB Control Number 1902–0145) to collect information required by the statutory provisions of Section 24 of the Federal Power Act (FPA), (16 U.S.C. 818). Applicants proposing hydropower projects, or changes to existing projects located on lands owned by the United States are required to provide a description of the U.S. lands affected, to the Commission and Secretary of Interior. FERC Form No. 587 consolidates the information required, and identifies hydropower project boundary maps associated with lands of the United States. The Commission verifies the accuracy of the information supplied and coordinates with the Bureau Land of Management State Offices (BLM), so the U.S. lands can be reserved as hydropower sites and withdrawn from other uses. (When the filer submits the FERC–587, the filer is also required to submit exhibit drawings (e.g., on aperture cards and/or electronic files). The FERC–587 serves as a 'table of contents' for the federal lands that are shown in the drawings. The reporting requirements and burdens related to the preparation and submittal of the actual drawings are included, as appropriate, in: FERC–512 (Application for Preliminary Permits; OMB Control No: 1902–0073), FERC–500 (Application for License/Relicense for Water Projects with Greater than 5 MW Capacity; OMB Control No. 1902–0058), and FERC–505 (Application for License/Relicense for Water Projects with Less then 5 MW Capacity; OMB Control No. 1902–0115).)

Action: The Commission is requesting a three-year extension of the current expiration date for the FERC–587.

Burden Statement: Public reporting burden for this collection is estimated at:

FERC Data collection	Number of respondents annually (1)	Number of responses per respondent (2)	Average burden hours per response (3)	Total annual burden hours (1) × (2) × (3)
FERC–587	250	1	1	250

The total estimated annual cost is $12,500 (250 hours at $50/hour). The estimated annual cost per respondent is $50. [These figures are based on the estimated median salary (adjusted for inflation) for a civil engineering technician, from the Bureau of Labor Statistics, Occupational Employment Statistics.]

The reporting burden includes the total time, effort, or financial resources expended to generate, maintain, retain, disclose, or provide the information including: (1) Reviewing instructions; (2) developing, acquiring, installing, and utilizing technology and systems for the purposes of collecting, validating, verifying, processing, maintaining, disclosing and providing information; (3) adjusting the existing ways to comply with any previously applicable instructions and requirements; (4) training personnel to respond to a collection of information; (5) searching data sources; (6) completing and reviewing the collection of information; and (7) transmitting, or otherwise disclosing the information.

The estimate of cost for respondents is based upon salaries for professional and clerical support, as well as direct and indirect overhead costs. Direct costs include all costs directly attributable to providing this information, such as administrative costs and the cost for information technology. Indirect or overhead costs are costs incurred by an organization in support of its mission. These costs apply to activities which benefit the whole organization rather than any one particular function or activity.

Comments are invited on: (1) Whether the proposed collection of information is necessary for the proper performance of the functions of the Commission, including whether the information will have practical utility; (2) the accuracy of the agency's estimate of the burden of the proposed collection of information, including the validity of the methodology and assumptions used; (3) ways to enhance the quality, utility and clarity of the information to be collected; and (4) ways to minimize the burden of the collection of information on those who are to respond, including the use of appropriate automated, electronic, mechanical, or other technological collection techniques or other forms of information technology, e.g. permitting electronic submission of responses.

Kimberly D. Bose,

Secretary.

[FR Doc. E9–753 Filed 1–14–09; 8:45 am]

BILLING CODE 6717–01–P

DEPARTMENT OF ENERGY

Federal Energy Regulatory Commission

[Project No. 13298–000]

Alaska Village Electric Cooperative; Notice of Preliminary Permit Application Accepted for Filing and Soliciting Comments, Motions To Intervene, and Competing Applications

January 8, 2009.

On October 9, 2008, Alaska Village Electric Cooperative filed an application, pursuant to section 4(f) of the Federal Power Act, proposing to study the feasibility of the Port Clarence Hydrokinetic Project (Port Clarence), located in Port Clarence, within an Unorganized Borough, between the communities of Teller and Brevig

Mission, Alaska. The project uses no dam or impoundment.

The proposed Port Clarence project would consist of: (1) 2 proposed submerged Ocean Renewable horizontal axis crossflow turbines, with a total installed capacity of 300 kilowatts, (2) a proposed 6.5-mile-long, 7,200/12,400-kilovolt transmission line, and (3) appurtenant facilities. The project is estimated to have an annual generation of 1.3-gigawatt-hours, which would be sold to a local utility.

Applicant Contact: Mr. Brent Petrie, Alaska Village Electric Cooperative 4831 Eagle Street, Anchorage, AK 99503, phone: 907/565–5358.

FERC Contact: Patricia W. Gillis (202) 502–8735.

Deadline for filing comments, motions to intervene, competing applications (without notices of intent), or notices of intent to file competing applications: 60 days from the issuance of this notice. Comments, motions to intervene, notices of intent, and competing applications may be filed electronically via the Internet. See 18 CFR 385.2001(a)(1)(iii) and the instructions on the Commission's Web site under the ''e-Filing'' link. If unable to be filed electronically, documents may be paper-filed. To paper-file, an original and eight copies should be mailed to: Kimberly D. Bose, Secretary, Federal Energy Regulatory Commission, 888 First Street, NE., Washington, DC 20426. For more information on how to submit these types of filings please go to the Commission's Web site located at *http://www.ferc.gov/filing-comments.asp*. More information about this project can be viewed or printed on the ''eLibrary'' link of Commission's Web site at *http://www.ferc.gov/docs-filing/elibrary.asp*. Enter the docket number (P–13298) in the docket number field to access the document. For assistance, call toll-free 1–866–208–3372.

Kimberly D. Bose,

Secretary.

[FR Doc. E9–702 Filed 1–14–09; 8:45 am]

BILLING CODE 6717–01–P

DEPARTMENT OF ENERGY

Federal Energy Regulatory Commission

[Docket No. DI09–4–000]

Borough of High Bridge; Notice of Declaration of Intention and Soliciting Comments, Protests, and/or Motions To Intervene

January 8, 2009.

Take notice that the following application has been filed with the Commission and is available for public inspection:

a. *Application Type:* Declaration of Intention.

b. *Docket No.:* DI09–4–000.

c. *Date Filed:* December 22, 2008.

d. *Applicant:* Borough of High Bridge.

e. *Name of Project:* Lake Solitude Hydro Power Project.

f. *Location:* The proposed Lake Solitude Hydro Power Project will be located on the South Branch Raritan River, in Hunterdon County, in High Bridge, New Jersey.

g. *Filed Pursuant to:* Section 23(b)(1) of the Federal Power Act, 16 U.S.C. 817(b).

h. *Applicant Contact:* Douglas Walker, Borough Administrator, 71 Main Street, High Bridge, NJ 08829; Telephone: (908) 638–6455; Fax: (908) 638–9734; e-mail: *www.dwalker@highbridge.org*.

i. *FERC Contact:* Any questions on this notice should be addressed to Henry Ecton, (202) 502–8768, or E-mail address: *henry.ecton@ferc.gov.*

j. *Deadline for filing comments, protests, and/or motions:* February 9, 2009.

All documents (original and eight copies) should be filed with: Secretary, Federal Energy Regulatory Commission, 888 First Street, NE., Washington, DC 20426. Comments, protests, and/or interventions may be filed electronically via the Internet in lieu of paper. Any questions, please contact the Secretary's Office. See, 18 CFR 385.2001(a)(1)(iii) and the instructions on the Commission's Web site at *http://www.ferc.gov* under the ''e-Filing'' link.

Please include the docket number (DI09–4–000) on any comments, protests, and/or motions filed.

k. *Description of Project:* The proposed Lake Solitude Hydro Power Project will include: (1) An existing dam consisting of a 500-foot-long earth embankment and a 188-foot-long, 42-foot high masonry spillway; (2) a proposed 78-inch-diameter, 500-foot-long steel penstock; (3) an existing powerhouse which will contain a turbine with a maximum output of 500-kW; (4) proposed transmission lines which will be connected to a downstream industry; and (5) appurtenant facilities. The power from the proposed project will be sold to a downstream industry. The proposed project will not occupy any tribal or federal lands.

When a Declaration of Intention is filed with the Federal Energy Regulatory Commission, the Federal Power Act requires the Commission to investigate and determine if the interests of interstate or foreign commerce would be affected by the project. The Commission also determines whether or not the project: (1) Would be located on a navigable waterway; (2) would occupy or affect public lands or reservations of the United States; (3) would utilize surplus water or water power from a government dam; or (4) if applicable, has involved or would involve any construction subsequent to 1935 that may have increased or would increase the project's head or generating capacity, or have otherwise significantly modified the project's pre-1935 design or operation.

l. *Locations of the Application:* Copies of this filing are on file with the Commission and are available for public inspection. This filing may be viewed on the Web at *http://www.ferc.gov* using the ''eLibrary'' link, select ''Docket#'' and follow the instructions. For assistance, please contact FERC Online Support at *FERCOnlineSupport@ferc.gov* or toll-free at (866) 208–3372, or TTY, contact (202) 502–8659.

m. Individuals desiring to be included on the Commission's mailing list should so indicate by writing to the Secretary of the Commission.

n. *Comments, Protests, or Motions to Intervene*—Anyone may submit comments, a protest, or a motion to intervene in accordance with the requirements of Rules of Practice and Procedure, 18 CFR 385.210, .211, .214. In determining the appropriate action to take, the Commission will consider all protests or other comments filed, but only those who file a motion to intervene in accordance with the Commission's Rules may become a party to the proceeding. Any comments, protests, or motions to intervene must be received on or before the specified comment date for the particular application.

o. *Filing and Service of Responsive Documents*—Any filings must bear in all capital letters the title ''COMMENTS'', ''PROTESTS'', and/or ''MOTIONS TO INTERVENE'', as applicable, and the Docket Number of the particular application to which the filing refers. A copy of any motion to

intervene must also be served upon each representative of the Applicant specified in the particular application.

p. *Agency Comments*—Federal, State, and local agencies are invited to file comments on the described application. A copy of the application may be obtained by agencies directly from the Applicant. If an agency does not file comments within the time specified for filing comments, it will be presumed to have no comments. One copy of an agency's comments must also be sent to the Applicant's representatives.

Kimberly D. Bose,

Secretary.

[FR Doc. E9–703 Filed 1–14–09; 8:45 am]

BILLING CODE 6717–01–P

DEPARTMENT OF ENERGY

Federal Energy Regulatory Commission

[P–13295–000]

BPUS Generation Development LLC; Notice of Application for Preliminary Permit Accepted for Filing and Soliciting Comments, Motions To Intervene, and Protests

January 9, 2009.

On October 2, 2008, BPUS Generation Development LLC filed an application, pursuant to section 4(f) of the Federal Power Act (FPA), to study the proposed Duffey Lakes Pumped Storage Project. The proposed project would be located in Snohomish and King Counties, Washington. The project facilities would be partially located on federal lands administered by the U.S. Department of Agriculture Forest Service. The Commission issued a public notice of the application on November 13, 2008; however, due to an inadvertent error, the notice did not run in the local newspapers. The Federal Power Act legally requires the Commission to issue a public notice in a local newspaper once a week for four weeks. Therefore, we are reissuing the public notice in order to allow the notice to run in a local newspaper in Washington.

The proposed project would consist of: (1) An expanded Duffey Lakes as the upper reservoir; (2) an expanded Lake Cavanaugh as the lower reservoir; (3) a new powerhouse containing four pump/turbine-generator units with a combined capacity of 1,150 megawatts (MW); (4) a new intake structure, headrace tunnel, and two tailraces; (5) a new 5.0-mile-long, 500-kilovolt transmission line, and (6) appurtenant facilities. The proposed project would have an average annual generation of 3,293 gigawatt-hours (GWh).

Applicant Contact: Mr. Jeffrey M. Auser, P.E., BPUS Generation Development LLC, 225 Greenfield Parkway, Suite 201, Liverpool, NY 13088, (315) 413–2821.

FERC Contact: Jake Tung, (202) 502–8757.

Deadline for filing comments, motions to intervene, competing applications (without notices of intent), or notices of intent to file competing applications: 60 days from the issuance of this notice. Comments, motions to intervene, notices of intent, and competing applications may be filed electronically via the Internet. See 18 CFR 385.2001(a)(1)(iii) and the instructions on the Commission's Web site under the ''e-Filing'' link. If unable to be filed electronically, documents may be paper-filed. To paper-file, an original and eight copies should be mailed to: Kimberly D. Bose, Secretary, Federal Energy Regulatory Commission, 888 First Street, NE., Washington, DC 20426. For more information on how to submit these types of filings please go to the Commission's Web site located at *http://www.ferc.gov/filing-comments.asp.* More information about this project can be viewed or printed on the ''eLibrary'' link of the Commission's Web site at *http://www.ferc.gov/docs-filing/elibrary.asp.* Enter the docket number (P–13295) in the docket number field to access the document. For assistance, call toll-free 1–866–208–3372.

Kimberly D. Bose,

Secretary.

[FR Doc. E9–751 Filed 1–14–09; 8:45 am]

BILLING CODE 6717–01–P

DEPARTMENT OF ENERGY

Federal Energy Regulatory Commission

[Project No. 12107–003]

Granite County; Notice of Application Accepted for Filing and Soliciting Motions To Intervene and Protests

January 9, 2009.

Take notice that the following hydroelectric application has been filed with the Commission and is available for public inspection.

a. *Type of Application:* A New License. (Major Project).

b. *Project No:* 12107–003.

c. *Date Filed:* August 8, 2008.

d. *Applicant:* Granite County.

e. *Name of Project:* Flint Creek Hydroelectric Project.

f. *Location:* The proposed project would be located on Flint Creek at the Georgetown Lake Dam, near Philipsburg, in Granite County and Deer Lodge County, Montana. The proposed project would affect about 1266.33 acres of Federal lands within the Beaverhead-Deer Lodge National Forest.

g. *Filed Pursuant to:* Federal Power Act 16 U.S.C. 791 (a)–825(r).

h. *Applicant Contact*: Granite County, Maureen Connor, Chairman, Board of County Commissioners, PO Box 925, Philipsburg, Montana 59858–0925; (406) 859–3817, or Roger Kirk, Agent, PO Box 1136, Bozeman, Montana 59771; (406) 587–5086.

i. *FERC Contact:* Gaylord Hoisington, (202) 502–6032 or *gaylord.hoisington@FERC.gov*.

j. *Cooperating agencies:* We are asking Federal, State, local, and tribal agencies with jurisdiction and/or special expertise with respect to environmental issues to cooperate with us in the preparation of the environmental document. Agencies who would like to request cooperating status should follow the instructions for filing such requests described in item k below. Cooperating agencies should note the Commission's policy that agencies that cooperate in the preparation of the environmental document cannot also intervene. *See*, 94 FERC ¶ 61,076 (2001).

k. *Deadline for filing motions to intervene and protest and request for cooperating agency status:* 60 days from the issuance date of this notice (March 10, 2009).

All documents (original and eight copies) should be filed with: Kimberly D. Bose, Secretary, Federal Energy Regulatory Commission, 888 First Street, NE., Washington, DC 20426.

The Commission's Rules of Practice and Procedures require all intervenors filing documents with the Commission to serve a copy of that document on each person on the official service list for the project. Further, if an intervenor files comments or documents with the Commission relating to the merits of an issue that may affect the responsibilities of a particular resource agency, they must also serve a copy of the document on that resource agency.

Motions to intervene and protests and requests for cooperating agency status may be filed electronically via the Internet in lieu of paper. The Commission strongly encourages electronic filings. See 18 CFR 385.2001(a)(1)(iii) and the instructions on the Commission's Web site (*http://www.ferc.gov*) under the ''e-Filing'' link.

l. This application has been accepted for filing, but is not ready for environmental analysis at this time.

m. The Flint Creek project consists of: (1) An existing 2,850 acre reservoir with

31,034 acre-feet of storage at elevation 6,378 feet above mean sea level; (2) an existing 330-foot-long and 44-foot-high earth with masonry-core dam; (3) a new 36-inch-diameter by 6,282-foot-long polymer and/or steel pipeline; (4) a surge tank; (5) a new 36-inch-diameter by approximately 1,463-foot-long buried penstock connecting the surge tank to the new powerhouse; (6) a new approximately 30-foot by 40-foot powerhouse containing one Pelton turbine-generator unit rated at 2 megawatts; (7) a new approximately 95-foot-long buried tailrace; (8) a new approximately 10-foot by 10-foot fenced substation located next to the powerhouse; and (9) all appurtenant structures. The average annual generation of the project is approximately 10 gigawatthours.

n. A copy of the application is available for review at the Commission in the Public Reference Room or may be viewed on the Commission's Web site at *http://www.ferc.gov* using the ''eLibrary'' link. Enter the docket number excluding the last three digits in the docket number field to access the document. For assistance, contact FERC Online Support at *FERCOnlineSupport@ferc.gov* or toll-free at 1–866–208–3676, or for TTY, (202) 502–8659. A copy is also available for inspection and reproduction at the address in item (h) above.

You may also register online at *http://www.ferc.gov/docs-filing/esubscription.asp* to be notified via e-mail of new filings and issuances related to this or other pending projects. For assistance, contact FERC Online Support.

o. Any qualified applicant desiring to file a competing application must submit to the Commission, on or before the specified intervention deadline date, a competing development application, or a notice of intent to file such an application. Submission of a timely notice of intent allows an interested person to file the competing development application no later than 120 days after the specified intervention deadline date. Applications for preliminary permits will not be accepted in response to this notice.

A notice of intent must specify the exact name, business address, and telephone number of the prospective applicant, and must include an unequivocal statement of intent to submit a development application. A notice of intent must be served on the applicant(s) named in this public notice.

Anyone may submit a protest or a motion to intervene in accordance with the requirements of Rules of Practice and Procedure, 18 CFR 385.210, 385.211, and 385.214. In determining the appropriate action to take, the Commission will consider all protests filed, but only those who file a motion to intervene in accordance with the Commission's Rules may become a party to the proceeding. Any protests or motions to intervene must be received on or before the specified deadline date for the particular application.

When the application is ready for environmental analysis, the Commission will issue a public notice requesting comments, recommendations, terms and conditions, or prescriptions.

All filings must (1) Bear in all capital letters the title ''PROTEST'' or ''MOTION TO INTERVENE,'' ''NOTICE OF INTENT TO FILE COMPETING APPLICATION,'' or ''COMPETING APPLICATION;'' (2) set forth in the heading the name of the applicant and the project number of the application to which the filing responds; (3) furnish the name, address, and telephone number of the person protesting or intervening; and (4) otherwise comply with the requirements of 18 CFR 385.2001 through 385.2005. Agencies may obtain copies of the application directly from the applicant. A copy of any protest or motion to intervene must be served upon each representative of the applicant specified in the particular application.

Kimberly D. Bose,

Secretary.

[FR Doc. E9–748 Filed 1–14–09; 8:45 am]

BILLING CODE 6717–01–P

DEPARTMENT OF ENERGY

Federal Energy Regulatory Commission

[Project No. 1267–087]

Greenwood County, SC; Notice of Application and Soliciting Comments, Motions To Intervene, and Protests

January 9, 2009.

a. *Type of Application:* Application to temporarily amend the rule curve pursuant to article 407 of the project license.

b. *Project Number:* Project No. 1267–087.

c. *Date Filed:* December 23, 2008.

d. *Applicant:* Greenwood County, South Carolina.

e. *Name of Project:* Buzzard's Roost Hydroelectric Project (FERC No. 1267).

f. *Location:* The project is located on the Saluda River in Greenwood, Laurens and Newberry Counties, South Carolina..

g. *Filed Pursuant to:* Federal Power Act, 16 U.S.C. 791(a), 825(r) and 799 and 801.

h. *Applicant Contact:* Mr. Charles M. Watson Jr., County Attorney, County of Greenwood, 600 Monument St., Suite 102, Greenwood, SC 29646, phone (864) 942–3140.

i. *FERC Contact:* Any questions on this notice should be addressed to B. Peter Yarrington at (202) 502–6129.

j. *Deadline for filing comments and or motions:* January 26, 2009.

k. *Description of Application:* Because of ongoing drought conditions, the applicant seeks approval to temporarily amend article 407 of its project license to revise the schedule for management of lake levels (rule curve). Under the rule curve, the reservoir level is raised to an elevation of 439 feet mean sea level (msl) by April 15 each year. Beginning on September 1, the reservoir level is then reduced until it reaches 437 feet msl by October 1. The level is then maintained at 437 feet msl until January 1, when it is reduced to 434.5 feet msl by February 1. At that time, the reservoir level is increased and the annual cycle is repeated. The licensee proposes to forgo the reservoir level reduction from 437 feet msl to 434.5 feet msl that would normally occur from January 1 to February 1, 2009, and would then refill the reservoir to the summer elevation of 439 feet msl by March 15, 2009, rather than waiting until April 15.

l. *Locations of the Application:* A copy of the application is available for inspection and reproduction at the Commission's Public Reference Room, located at 888 First Street, NE., Room 2A, Washington, DC 20426, or by calling (202) 502–8371. This filing may also be viewed on the Commission's Web site at *http://www.ferc.gov* using the ''eLibrary'' link. Enter the docket number excluding the last three digits in the docket number field (p–1267) to access the document. You may also register online at *http://www.ferc.gov/docs-filing/esubscription.asp* to be notified via e-mail of new filings and issuances related to this or other pending projects. For assistance, call 1–866–208–3676 or e-mail *FERCOnlineSupport@ferc.gov,* for TTY, call (202) 502–8659. A copy is also available for inspection and reproduction at the address in item (h) above.

m. Individuals desiring to be included on the Commission's mailing list should so indicate by writing to the Secretary of the Commission.

n. *Comments, Protests, or Motions to Intervene*—Anyone may submit comments, a protest, or a motion to

intervene in accordance with the requirements of Rules of Practice and Procedure, 18 CFR 385.210, .211, .214. In determining the appropriate action to take, the Commission will consider all protests or other comments filed, but only those who file a motion to intervene in accordance with the Commission's Rules may become a party to the proceeding. Any comments, protests, or motions to intervene must be received on or before the specified comment date for the particular application.

o. *Filing and Service of Responsive Documents*—Any filings must bear in all capital letters the title ''COMMENTS'', ''RECOMMENDATIONS FOR TERMS AND CONDITIONS'', ''PROTEST'', or ''MOTION TO INTERVENE'', as applicable, and the Project Number of the particular application to which the filing refers (p–1267–080). All documents (original and eight copies) should be filed with: Kimberly D. Bose, Secretary, Federal Energy Regulatory Commission, 888 First Street, NE., Washington, DC 20426. A copy of any motion to intervene must also be served upon each representative of the Applicant specified in the particular application.

p. *Agency Comments*—Federal, State, and local agencies are invited to file comments on the described application. A copy of the application may be obtained by agencies directly from the Applicant. If an agency does not file comments within the time specified for filing comments, it will be presumed to have no comments. One copy of an agency's comments must also be sent to the Applicant's representatives.

q. Comments, protests and interventions may be filed electronically via the Internet in lieu of paper. See, 18 CFR 385.2001(a)(1)(iii) and the instructions on the Commission's Web site at *http://www.ferc.gov* under the ''e-Filing'' link.

Kimberly D. Bose,

Secretary.

[FR Doc. E9–749 Filed 1–14–09; 8:45 am]

BILLING CODE 6717–01–P

DEPARTMENT OF ENERGY

Federal Energy Regulatory Commission

[Project No. 13243–000]

Rockhouse Mountain Energy, LLC; Notice of Preliminary Permit Application Accepted for Filing and Soliciting Comments, Motions To Intervene, and Competing Applications

January 9, 2009.

On June 13, 2008, Rockhouse Mountain Energy, LLC filed an application, pursuant to section 4(f) of the Federal Power Act, proposing to study the feasibility of the Murphy Dam Hydroelectric Project. The project would be located at the existing Murphy Dam owned by the State of New Hampshire on Lake Francis, in Coos County, New Hampshire. The Commission issued a public notice of the application on November 13, 2008; however, due to an inadvertent error, the notice did not run in the local newspapers. The Federal Power Act legally requires the Commission to issue a public notice in a local newspaper once a week for four weeks. Therefore, we are reissuing the public notice in order to allow the notice to run in a local newspaper in New Hampshire.

The proposed Murphy Dam Project would use the State of New Hampshire's Murphy Dam and would consist of: (1) A proposed 540-foot-long, 8-foot-diameter steel penstock; (2) a proposed powerhouse containing one generating unit having a total installed capacity of 2.25 MW; (3) a proposed 1.1-mile-long, 19.9/34.5-kV transmission line; (4) a tailrace; and (5) appurtenant facilities. The proposed project would have an average annual generation of 11.6 gigawatt-hours, which would be sold to a local utility.

Applicant Contact: Mr. Robert Jawitz, Rockhouse Mountain Energy, LLC, PO Box 197, Conway, NH 03818; phone (603) 387–9998.

FERC Contact: Kelly T. Houff, (202) 502–6393.

Deadline for filing comments, motions to intervene, competing applications (without notices of intent), or notices of intent to file competing applications: 60 days from the issuance of this notice. Comments, motions to intervene, notices of intent, and competing applications may be filed electronically via the Internet. See 18 CFR 385.2001(a)(1)(iii) and the instructions on the Commission's Web site under the ''e-Filing'' link. If unable to be filed electronically, documents may be paper-filed. To paper-file, an original and eight copies should be mailed to: Kimberly D. Bose, Secretary, Federal Energy Regulatory Commission, 888 First Street, NE., Washington, DC 20426. For more information on how to submit these types of filings please go to the Commission's Web site located at *http://www.ferc.gov/filing-comments.asp.* More information about this project can be viewed or printed on the ''eLibrary'' link of Commission's Web site at *http://www.ferc.gov/docs-filing/elibrary.asp.* Enter the docket number (P–13243) in the docket number field to access the document. For assistance, call toll-free 1–866–208–3372.

Kimberly D. Bose,

Secretary.

[FR Doc. E9–750 Filed 1–14–09; 8:45 am]

BILLING CODE 6717–01–P

DEPARTMENT OF ENERGY

Federal Energy Regulatory Commission

[Docket No. DI09–3–000]

Spaur Ranch; Notice of Declaration of Intention and Soliciting Comments, Protests, and/or Motions To Intervene

January 8, 2009.

Take notice that the following application has been filed with the Commission and is available for public inspection:

a. *Application Type:* Declaration of Intention.

b. *Docket No:* DI09–3–000.

c. *Date Filed:* December 18, 2008.

d. *Applicant:* Spaur Ranch.

e. *Name of Project:* Spaur Ranch Microhydro Project.

f. *Location:* The proposed Spaur Ranch Microhydro Project will be located on West End Ditch, in Wallowa County, near the town of Wallowa, Oregon.

g. *Filed Pursuant to:* Section 23(b)(1) of the Federal Power Act, 16 U.S.C. 817(b).

h. *Applicant Contact:* Ben Henson, Renewable Energy Solutions LLC, 78514 Redmond Grade, Enterprise, OR 97828; Telephone: (541) 828–7779; Fax: (541) 828–7827; e-mail: *http://www.blhenson@cpcinternet.com.*

i. *FERC Contact:* Any questions on this notice should be addressed to Henry Ecton, (202) 502–8768, or e-mail address: *henry.ecton@ferc.gov.*

j. *Deadline for filing comments, protests, and/or motions:* February 9, 2009.

All documents (original and eight copies) should be filed with: Secretary, Federal Energy Regulatory Commission,

888 First Street, NE., Washington, DC 20426. Comments, protests, and/or interventions may be filed electronically via the Internet in lieu of paper. Any questions, please contact the Secretary's Office. See, 18 CFR 385.2001(a)(1)(iii) and the instructions on the Commission's Web site at *http://www.ferc.gov* under the ''e-Filing'' link.

Please include the docket number (DI09–3–000) on any comments, protests, and/or motions filed.

k. *Description of Project:* The proposed Spaur Ranch Microhydro Project will include: (1) An existing 800-yard-long, 15-inch-diameter pipe that reduces to a 600-foot-long, 10-inch-diameter pipe, conveying water from the West Side Irrigation Ditch into an existing building containing a 11-kW pelton wheel turbine; (2) a short tailrace, conveying the water back into the irrigation canal; and (3) appurtenant facilities. The power from the proposed project will be net metered, connected to the interstate grid through Pacific Power. The proposed project will not occupy any tribal or Federal lands.

When a Declaration of Intention is filed with the Federal Energy Regulatory Commission, the Federal Power Act requires the Commission to investigate and determine if the interests of interstate or foreign commerce would be affected by the project. The Commission also determines whether or not the project: (1) Would be located on a navigable waterway; (2) would occupy or affect public lands or reservations of the United States; (3) would utilize surplus water or water power from a government dam; or (4) if applicable, has involved or would involve any construction subsequent to 1935 that may have increased or would increase the project's head or generating capacity, or have otherwise significantly modified the project's pre-1935 design or operation.

l. *Locations of the Application:* Copies of this filing are on file with the Commission and are available for public inspection. This filing may be viewed on the Web at *http://www.ferc.gov* using the ''eLibrary'' link, select ''Docket#'' and follow the instructions. For assistance, please contact FERC Online Support at *FERCOnlineSupport@ferc.gov* or toll-free at (866) 208–3372, or TTY, contact (202) 502–8659.

m. Individuals desiring to be included on the Commission's mailing list should so indicate by writing to the Secretary of the Commission.

n. *Comments, Protests, or Motions to Intervene*—Anyone may submit comments, a protest, or a motion to intervene in accordance with the requirements of Rules of Practice and Procedure, 18 CFR 385.210, .211, .214. In determining the appropriate action to take, the Commission will consider all protests or other comments filed, but only those who file a motion to intervene in accordance with the Commission's Rules may become a party to the proceeding. Any comments, protests, or motions to intervene must be received on or before the specified comment date for the particular application.

o. *Filing and Service of Responsive Documents*—Any filings must bear in all capital letters the title ''COMMENTS'', ''PROTESTS'', and/or ''MOTIONS TO INTERVENE'', as applicable, and the Docket Number of the particular application to which the filing refers. A copy of any motion to intervene must also be served upon each representative of the Applicant specified in the particular application.

p. *Agency Comments*—Federal, State, and local agencies are invited to file comments on the described application. A copy of the application may be obtained by agencies directly from the Applicant. If an agency does not file comments within the time specified for filing comments, it will be presumed to have no comments. One copy of an agency's comments must also be sent to the Applicant's representatives.

Kimberly D. Bose,

Secretary.

[FR Doc. E9–706 Filed 1–14–09; 8:45 am]

BILLING CODE 6717–01–P

DEPARTMENT OF ENERGY

Federal Energy Regulatory Commission

Combined Notice of Filings #1

January 7, 2009.

Take notice that the Commission received the following electric corporate filings:

Docket Numbers: EC09–35–000.
Applicants: New Harquahala Generating Co., LLC,MACH Gen, LLC, New Athens Generating Company, LLC, Millennium Power Partners, LP, Strategic Value Partners.
Description: Application of MACH Gen, LLC, *et al.* under Section 203 of the Federal Power Act.
Filed Date: 01/06/2009.
Accession Number: 20090106–5086.
Comment Date: 5 p.m. Eastern Time on Tuesday, January 27, 2009.

Docket Numbers: EC09–36–000.
Applicants: EDF Development, Inc., Constellation Energy Group, Inc., Handsome Lake Energy, LLC.
Description: Joint Application of EDF Development, Inc. *et al.* under Section 203 of the Federal Power Act.
Filed Date: 01/06/2009.
Accession Number: 20090106–5090.
Comment Date: 5 p.m. Eastern Time on Tuesday, January 27, 2009.

Docket Numbers: EC09–37–000.
Applicants: EDF Development, Inc., Constellation Energy Group, Inc., CER Generation II, LLC.
Description: Joint Application of EDF Development, Inc. *et al.* under Section 203 of the Federal Power Act.
Filed Date: 01/06/2009.
Accession Number: 20090106–5093.
Comment Date: 5 p.m. Eastern Time on Tuesday, January 27, 2009.

Docket Numbers: EC09–38–000.
Applicants: EDF Development, Inc., Constellation Energy Group Inc.
Description: Joint Application of EDF Development, Inc. *et al.* under Section 203 of the Federal Power Act.
Filed Date: 01/06/2009.
Accession Number: 20090106–5095.
Comment Date: 5 p.m. Eastern Time on Tuesday, January 27, 2009.

Docket Numbers: EC09–39–000.
Applicants: EDF Development, Inc., Constellation Energy Group, Inc., Constellation Power Source Generation LLC.
Description: Joint Application of EDF Development, Inc. *et al.* under Section 203 of Federal Power Act.
Filed Date: 01/06/2009.
Accession Number: 20090106–5096
Comment Date: 5 p.m. Eastern Time on Tuesday, January 27, 2009.

Docket Numbers: EC09–40–000.
Applicants: EDF Development, Inc., Constellation Energy Group, Inc., Constellation Energy Nuclear Group, LLC.
Description: Joint Application of EDF Development, Inc. *et al.* under Section 203 of Federal Power Act.
Filed Date: 01/06/2009.
Accession Number: 20090106–5097
Comment Date: 5 p.m. Eastern Time on Tuesday, January 27, 2009.

Docket Numbers: EC09–41–000.
Applicants: EDF Development, Inc., Constellation Energy Group, Inc., Constellation Power Source Generation LLC.
Description: Joint Application of EDF Development, Inc. under Section 203 of the Federal Power Act.
Filed Date: 01/06/2009.
Accession Number: 20090106–5098.
Comment Date: 5 p.m. Eastern Time on Tuesday, January 27, 2009.

Docket Numbers: EC09–42–000.
Applicants: EDF Development, Inc., Constellation Energy Group, Inc.

Description: Joint Application of EDF Development, Inc. under Section 203 of Federal Power Act.

Filed Date: 01/06/2009.

Accession Number: 20090106–5099.

Comment Date: 5 p.m. Eastern Time on Tuesday, January 27, 2009.

Docket Numbers: EC09–43–000.

Applicants: EDF Development, Inc., Constellation Energy Group, Inc.

Description: Joint Application of EDF Development, Inc., *et al.* for Authorization Under Section 203 of the Federal Power Act and Request for Expedited Treatment.

Filed Date: 01/06/2009.

Accession Number: 20090106–5120.

Comment Date: 5 p.m. Eastern Time on Tuesday, January 27, 2009.

Docket Numbers: EC09–44–000.

Applicants: EDF Development, Inc., Constellation Energy Group, Inc., Constellation Power Source Generation LLC.

Description: Joint Application of EDF Development, Inc., *et al.* for Authorization Under Section 203 of the Federal Power Act and Request for Expedited Treatment.

Filed Date: 01/06/2009.

Accession Number: 20090106–5121

Comment Date: 5 p.m. Eastern Time on Tuesday, January 27, 2009.

Docket Numbers: EC09–45–000.

Applicants: EDF Development, Inc., Constellation Energy Group, Inc.

Description: Joint Application of EDF Development, Inc., *et al.* for Authorization Under Section 203 of the Federal Power Act and Request for Expedited Treatment.

Filed Date: 01/06/2009.

Accession Number: 20090106–5122.

Comment Date: 5 p.m. Eastern Time on Tuesday, January 27, 2009.

Docket Numbers: EC09–46–000.

Applicants: EDF Development, Inc., Constellation Energy Group, Inc., Constellation Power Source Generation LLC.

Description: Joint Application of EDF Development, Inc., *et al.* for Authorization Under Section 203 of the Federal Power Act and Request for Expedited Treatment.

Filed Date: 01/06/2009.

Accession Number: 20090106–5123.

Comment Date: 5 p.m. Eastern Time on Tuesday, January 27, 2009.

Take notice that the Commission received the following electric rate filings:

Docket Numbers: ER00–3614–011.

Applicants: BP Energy Company.

Description: BP Energy Company submits an updated market power analysis.

Filed Date: 12/22/2008.

Accession Number: 20081222–4003.

Comment Date: 5 p.m. Eastern Time on Friday, February 20, 2009.

Docket Numbers: ER01–205–033; ER98–2640–031.

Applicants: Xcel Energy Services Inc.

Description: Northern States Power Company-Minnesota, and Northern States Power Company-Wisconsin submit a Triennial Market Power Analysis pursuant to Order 697.

Filed Date: 12/22/2008.

Accession Number: 20081229–0153.

Comment Date: 5 p.m. Eastern Time on Friday, February 20, 2009.

Docket Numbers: ER07–30–002.

Applicants: RC Cape May Holdings, LLC.

Description: RC Cape May Holdings, LLC submits Substitute Original Sheet 1&2 to its FERC Electric Tariff, First Revised Volume 1.

Filed Date: 12/31/2008.

Accession Number: 20090105–0145.

Comment Date: 5 p.m. Eastern Time on Wednesday, January 21, 2009.

Docket Numbers: ER09–474–000.

Applicants: PowerSmith Cogeneration Project Limited.

Description: PowerSmith Cogeneration Project, Limited Partnership submits an Application for Market-Based Rate Authorization and Request for Waivers and Blanket Approvals.

Filed Date: 12/31/2008.

Accession Number: 20090105–0006.

Comment Date: 5 p.m. Eastern Time on Wednesday, January 21, 2009.

Docket Numbers: ER09–475–000.

Applicants: Simpson Tacoma Kraft Company, LLC.

Description: Simpson Tacoma Kraft Company, LLC submits Public Petition for Acceptance of Initial Tariff Waivers and Blanket Authority.

Filed Date: 12/31/2008.

Accession Number: 20090106–0081.

Comment Date: 5 p.m. Eastern Time on Wednesday, January 21, 2009.

Any person desiring to intervene or to protest in any of the above proceedings must file in accordance with Rules 211 and 214 of the Commission's Rules of Practice and Procedure (18 CFR 385.211 and 385.214) on or before 5 p.m. Eastern Time on the specified comment date. It is not necessary to separately intervene again in a subdocket related to a compliance filing if you have previously intervened in the same docket. Protests will be considered by the Commission in determining the appropriate action to be taken, but will not serve to make protestants parties to the proceeding. Anyone filing a motion to intervene or protest must serve a copy of that document on the Applicant. In reference to filings initiating a new proceeding, interventions or protests submitted on or before the comment deadline need not be served on persons other than the Applicant.

The Commission encourages electronic submission of protests and interventions in lieu of paper, using the FERC Online links at *http://www.ferc.gov*. To facilitate electronic service, persons with Internet access who will eFile a document and/or be listed as a contact for an intervenor must create and validate an eRegistration account using the eRegistration link. Select the eFiling link to log on and submit the intervention or protests.

Persons unable to file electronically should submit an original and 14 copies of the intervention or protest to the Federal Energy Regulatory Commission, 888 First St., NE., Washington, DC 20426.

The filings in the above proceedings are accessible in the Commission's eLibrary system by clicking on the appropriate link in the above list. They are also available for review in the Commission's Public Reference Room in Washington, DC. There is an eSubscription link on the Web site that enables subscribers to receive e-mail notification when a document is added to a subscribed docket(s). For assistance with any FERC Online service, please e-mail *FERCOnlineSupport@ferc.gov* or call (866) 208–3676 (toll free). For TTY, call (202) 502–8659.

Nathaniel J. Davis, Sr.,

Deputy Secretary.

[FR Doc. E9–701 Filed 1–14–09; 8:45 am]

BILLING CODE 6717–01–P

DEPARTMENT OF ENERGY

Federal Energy Regulatory Commission

Notice of Commission Staff Attendance at Midwest ISO Meetings

January 8, 2009.

The Federal Energy Regulatory Commission hereby gives notice that members of the Commission and Commission staff may attend the following Midwest ISO-related meetings in 2009:

- Advisory Committee (10 a.m.–3 p.m., ET).
- January 14.
- February 18.
- March 18.
- May 20.
- June 17.
- July 15.

- August 19 (St. Paul Hotel, 350 Market St., St. Paul, MN).
- September 16.
- October 14.
- November 18.
- December 2.
- Board of Directors (8:30 a.m.–10 a.m., ET).
- January 15.
- March 19.
- April 16 (Crowne Plaza Hotel, 123 West Louisiana St., Indianapolis, IN).
- June 18.
- August 20 (St. Paul Hotel, 350 Market St., St. Paul, MN).
- October 15.
- December 3.
- Board of Directors Markets Committee (8 a.m.–10 a.m., ET).
- January 14.
- March 18.
- April 15 (Crowne Plaza Hotel, 123 West Louisiana St., Indianapolis, IN).
- May 20.
- June 17.
- July 15.
- August 19 (St. Paul Hotel, 350 Market St., St. Paul, MN).
- September 16.
- October 14.
- November 18.
- December 2.
- Midwest ISO Informational Forum (3 p.m.–5 p.m., ET).
- January 13.
- February 17.
- March 17.
- April 15.
- May 19.
- June 16.
- July 14.
- August 18 (St. Paul Hotel, 350 Market St., St. Paul, MN).
- September 15.
- October 13.
- November 17.
- December 15.
- Midwest ISO Market Subcommittee (9 a.m.–5 p.m., ET).
- February 3.
- March 3.
- April 7.
- May 5.
- June 2.
- July 7.
- August 4.
- September 1.
- October 6.
- November 3.
- December 1.
- Fifth Annual Midwest ISO Stakeholders' Meeting, April 15 (10 a.m.–5 p.m., ET) (Crowne Plaza Hotel, 123 West Louisiana St., Indianapolis, IN)

Except as noted, all of the meetings above will be held at: Midwest ISO Headquarters, 720 City Center Drive, Carmel, IN 46032.

The above-referenced meetings are open to the public. Further information may be found at *http://www.midwestiso.org*.

The discussions at each of the meetings described above may address matters at issue in the following proceedings:

Docket No. EL02–111, *Midwest Independent Transmission System Operator, Inc.*

Docket No. EL03–212, *Ameren Services Company.*

Docket No. ER02–488, *Midwest Independent Transmission System Operator, Inc.*

Docket No. ER04–375, *Midwest Independent Transmission System Operator, Inc., et al.*

Docket Nos. ER04–458, *Midwest Independent Transmission System Operator, Inc.*

Docket Nos. ER04–691, EL04–104 and ER04–106, *Midwest Independent Transmission System Operator, Inc., et al.*

Docket Nos. ER05–6, *Midwest Independent Transmission System Operator, Inc., et al.*

Docket No. ER05–636, *Midwest Independent Transmission System Operator, Inc.*

Docket No. ER05–752, *Midwest Independent Transmission System Operator, Inc. and PJM Interconnection, L.L.C.*

Docket No. ER05–1047, *Midwest Independent Transmission System Operator, Inc.*

Docket No. ER05–1048, *Midwest Independent Transmission System Operator, Inc.*

Docket Nos. ER05–1083, *Midwest Independent Transmission System Operator, Inc., et al.*

Docket Nos. ER05–1085, *Midwest Independent Transmission System Operator, Inc.*

Docket No. ER05–1138, *Midwest Independent Transmission System Operator, Inc.*

Docket No. ER05–1201, *Midwest Independent Transmission System Operator, Inc.*

Docket No. ER05–1230, *Midwest Independent Transmission System Operator, Inc.*

Docket No. EL05–103, *Northern Indiana Public Service Co.* v. *Midwest Independent Transmission System Operator, Inc. and PJM Interconnection, L.L.C.*

Docket No. EL05–128, *Quest Energy, L.L.C.* v. *Midwest Independent Transmission System Operator, Inc.*

Docket Nos. RM05–17 and RM05–25, *Preventing Undue Discrimination and Preference in Transmission Service.*

Docket Nos. EC06–4 and ER06–20, *E.ON U.S. LLC, et al.*

Docket Nos. ER06–18, *Midwest Independent Transmission System Operator, Inc.*

Docket No. ER06–22, *Midwest Independent Transmission System Operator, Inc.*

Docket No. ER06–27, *Midwest Independent Transmission System Operator, Inc., et al.*

Docket No. ER06–56, *Midwest Independent Transmission System Operator, Inc.*

Docket No. ER06–192, *Midwest Independent Transmission System Operator, Inc.*

Docket No. ER06–356, *Midwest Independent Transmission System Operator, Inc.*

Docket No. ER06–532, *Midwest Independent Transmission System Operator, Inc.*

Docket No. ER06–731, *Independent Market Monitor for the Midwest Independent Transmission System Operator, Inc.*

Docket No. ER06–866, *Midwest Independent Transmission System Operator, Inc.*

Docket No. ER06–881, *Midwest Independent Transmission System Operator, Inc.*

Docket No. ER06–1420, *Midwest Independent Transmission System Operator, Inc.*

Docket No. ER06–1536, *Midwest Independent Transmission System Operator, Inc.*

Docket No. ER06–1552, *Midwest Independent Transmission System Operator, Inc.*

Docket No. EL06–31, *Midwest Independent Transmission System Operator, Inc., et al.*

Docket No. EL06–49, *Midwest Independent Transmission System Operator, Inc., et al.*

Docket No. EL06–80, *Midwest Independent Transmission System Operator, Inc.*

Docket No. RM06–16, *Mandatory Reliability Standards for Bulk-Power System.*

Docket No. ER07–478, *Midwest Independent Transmission System Operator, Inc.*

Docket No. ER07–53, *Midwest Independent Transmission System Operator, Inc.*

Docket No. ER07–532, *Midwest Independent Transmission System Operator, Inc.*

Docket No. ER07–580, *Midwest Independent Transmission System Operator, Inc.*

Docket No. ER07–815, *Midwest Independent Transmission System Operator, Inc.*

Docket No. ER07–940, *Midwest Independent Transmission System Operator, Inc., et al.*
Docket No. ER07–1141, *International Transmission Co., et al.*
Docket No. ER07–1144, *American Transmission Co. LLC, et al.*
Docket No. ER07–1182, *Midwest Independent Transmission System Operator, Inc.*
Docket Nos. ER07–1233 and ER07–1261, *Midwest Independent Transmission System Operator, Inc.*
Docket No. ER07–1372, *Midwest Independent Transmission System Operator, Inc.*
Docket No. ER07–1375, *Midwest Independent Transmission System Operator, Inc.*
Docket No. ER07–1388, *Midwest Independent Transmission System Operator, Inc.*
Docket No. ER07–1417, *Midwest Independent Transmission System Operator, Inc., et al.*
Docket No. EL07–44, *Dakota Wind Harvest, LLC* v. *Midwest Independent Transmission System Operator, Inc., et al.*
Docket No. EL07–79, *Midwest Independent Transmission System Operator, Inc.*
Docket Nos. EL07–86, EL07–88, and EL07–92, *Ameren Services Co., et al.* v. *Midwest Independent Transmission System Operator, Inc., et al.*
Docket No. EL07–100, *E.ON U.S. LLC* v. *Midwest Independent Transmission System Operator, Inc.*
Docket Nos. RR07–2, *Delegation Agreement Between the North American Electric Reliability Corporation and Midwest Reliability Organization, et al.*
Docket No. AD07–12, *Reliability Standard Compliance and Enforcement in Regions with Independent System Operators and Regional Transmission Organizations.*
Docket No. OA07–57, *Midwest Independent Transmission System Operator, Inc.*
Docket Nos. RM07–19 and AD07–7, *Wholesale Competition in Regions with Organized Electric Markets.*
Docket No. ER08–15, *Midwest ISO Transmission Owners.*
Docket No. ER08–55, *Midwest Independent Transmission System Operator, Inc., et al.*
Docket No. ER08–109, *Midwest Independent Transmission System Operator, Inc.*
Docket Nos. ER08–185 and ER08–186, *Ameren Energy Marketing Company, et al.*
Docket No. ER08–207, *Midwest Independent Transmission System Operator, Inc.*
Docket No. ER08–209, *Midwest Independent Transmission System Operator, Inc.*
Docket No. ER08–269, *Midwest Independent Transmission System Operator, Inc.*
Docket No. ER08–296, *Midwest Independent Transmission System Operator, Inc.*
Docket No. ER08–320, *Midwest Independent Transmission System Operator, Inc.*
Docket No. ER08–370, *Midwest Independent Transmission System Operator, Inc.*
Docket No. ER08–394, *Midwest Independent Transmission System Operator, Inc.*
Docket No. ER08–404, *Midwest Independent Transmission System Operator, Inc.*
Docket No. ER08–637, *Midwest Independent Transmission System Operator, Inc.*
Docket No. ER08–925, *Midwest Independent Transmission System Operator, Inc.*
Docket No. ER08–1043, *Midwest Independent Transmission System Operator, Inc.*
Docket No. ER08–1074, *Midwest Independent Transmission System Operator, Inc.*
Docket No. ER08–1169, *Midwest Independent Transmission System Operator, Inc.*
Docket No. ER08–1244, *Midwest Independent Transmission System Operator, Inc.*
Docket No. ER08–1252, *Midwest Independent Transmission System Operator, Inc.*
Docket No. ER08–1285, *Midwest Independent Transmission System Operator, Inc.*
Docket No. ER08–1309, *Midwest Independent Transmission System Operator, Inc.*
Docket No. ER08–1370, *Midwest Independent Transmission System Operator, Inc.*
Docket No. ER08–1399, *Midwest Independent Transmission System Operator, Inc.*
Docket No. ER08–1400, *Midwest Independent Transmission System Operator, Inc.*
Docket No. ER08–1401, *Midwest Independent Transmission System Operator, Inc.*
Docket No. ER08–1404, *Midwest Independent Transmission System Operator, Inc.*
Docket No. ER08–1435, *Midwest Independent Transmission System Operator, Inc.*
Docket No. ER08–1485, *Midwest Independent Transmission System Operator, Inc.*
Docket No. ER08–1486, *Midwest Independent Transmission System Operator, Inc.*
Docket No. ER08–1505, *Midwest Independent Transmission System Operator, Inc.*
Docket No. OA08–4, *Midwest ISO Transmission Owners, et al.*
Docket No. OA08–14, *Midwest Independent Transmission System Operator, Inc.*
Docket No. OA08–42, *Midwest Independent Transmission System Operator, Inc.*
Docket No. OA08–53, *Midwest Independent Transmission System Operator, Inc.*
Docket No. OA08–106, *Midwest Independent Transmission System Operator, Inc.*
Docket No. EL09–9, *Wabash Valley Power Assoc, Inc.* v. *Midwest Independent Transmission System Operator, Inc.*
Docket No. EL09–10, *Ameren Services Co. and Northern Indiana Public Service Co.* v. *Midwest Independent Transmission System Operator, Inc.*
Docket No. ER09–59, *American Transmission Company, Inc.*
Docket No. ER09–66, *Midwest Independent Transmission System Operator, Inc.*
Docket No. ER09–83, *Midwest Independent Transmission System Operator, Inc.*
Docket No. ER09–91, *Midwest Independent Transmission System Operator, Inc.*
Docket No. ER09–108, *Midwest Independent Transmission System Operator, Inc.*
Docket No. ER09–117, *Midwest Independent Transmission System Operator, Inc.*
Docket No. ER09–123, *Midwest Independent Transmission System Operator, Inc.*
Docket No. ER09–160, *Midwest Independent Transmission System Operator, Inc.*
Docket No. ER09–180, *Midwest Independent Transmission System Operator, Inc.*
Docket No. ER09–245, *Midwest Independent Transmission System Operator, Inc.*
Docket No. ER09–266, *Midwest Independent Transmission System Operator, Inc.*
Docket No. ER09–267, *Midwest Independent Transmission System Operator, Inc.*
Docket No. ER09–403, *Midwest Independent Transmission System Operator, Inc.*
Docket No. OA09–7, *Midwest Independent Transmission System Operator, Inc.*

For more information, contact Patrick Clarey, Office of Energy Markets Regulation, Federal Energy Regulatory Commission at (317) 249–5937 or *patrick.clarey@ferc.gov,* or Christopher Miller, Office of Energy Markets Regulation, Federal Energy Regulatory Commission at (317) 249–5936 or *christopher.miller@ferc.gov.*

Kimberly D. Bose,

Secretary.

[FR Doc. E9–705 Filed 1–14–09; 8:45 am]

BILLING CODE 6717–01–P

DEPARTMENT OF ENERGY

Federal Energy Regulatory Commission

[Project No.: 503–048]

Idaho Power Company; Notice of Intent To Prepare an Environmental Impact Statement and Notice of Scoping Meetings and Soliciting Scoping Comments

January 9, 2009.

Take notice that the following hydroelectric application has been filed with the Commission and is available for public inspection.

a. *Type of Application:* New Major License.

b. *Project No.:* 503–048.

c. *Date filed:* June 26, 2008.

d. *Applicant:* Idaho Power Company.

e. *Name of Project:* Swan Falls Hydroelectric Project.

f. *Location:* The Swan Falls Hydroelectric Project is located on the Snake River at river mile (RM) 457.7 in Ada and Owyhee counties of southwestern Idaho, about 35 miles southwest of Boise. The project occupies 528.8 acres of lands of the United States within the Snake River Birds of Prey National Conservation Area.

g. *Filed Pursuant to:* Federal Power Act, 16 U.S.C. 791(a)–825(r).

h. *Applicant Contact:* Mr. Tom Saldin, Senior Vice President and General Counsel, Idaho Power Company, P.O. Box 70, Boise, Idaho 83707, (208) 388–2550.

i. *FERC Contact:* James Puglisi, Federal Energy Regulatory Commission, 888 First Street, NE., Washington, DC 20426; telephone (202) 502–6241 or by e-mail at *james.puglisi@ferc.gov*.

j. *Deadline for filing scoping comments:* March 13, 2009.

All documents (original and eight copies) should be filed with: Kimberly D. Bose, Secretary, Federal Energy Regulatory Commission, 888 First Street, NE., Washington, DC 20426.

The Commission's Rules of Practice require all interveners filing documents with the Commission to serve a copy of that document on each person on the official service list for the project. Further, if an intervener files comments or documents with the Commission relating to the merits of an issue that may affect the responsibilities of a particular resource agency, they must also serve a copy of the document on that resource agency.

Scoping comments may be filed electronically via the Internet in lieu of paper. The Commission strongly encourages electronic filings. See 18 CFR 385.2001(a)(1)(iii) and the instructions on the Commission's Web site (*http://www.ferc.gov*) under the ''e-Filing'' link.

k. This application is not ready for environmental analysis at this time.

l. The existing Swan Falls Project consists of: (1) A 1,218-foot-long concrete gravity and rock-fill dam composed of an abutment embankment, a spillway section, a center island, the old powerhouse section, the intermediate dam, and the new powerhouse; (2) a 12-mile-long 1,525-acre reservoir with a normal maximum water surface elevation of 2,314 feet mean sea level (msl); (3) twelve equal-width, concrete spillways with a capacity of 105,112 cubic feet per second (cfs) at reservoir elevation 2,318 msl, divided into two sections (western and eastern)—the western section, contiguous with the abutment embankment, is a gated, concrete ogee section with eight radial gates, and the eastern section, which is adjacent to the island, contains four radial gates; (4) two concrete flow channels (instead of penstocks); (5) two pit-bulb turbine generators with a nameplate rating of 25 megawatts; (6) a powerhouse completed in 1994; (7) a 1,400-foot-long, 120-foot-wide excavated tailrace channel; (8) a 33,600-kilovolt ampere main power transformer; (9) a 1-mile-long, 138-kilovolt transmission line; and (10) appurtenant equipment.

m. A copy of the application is available for review at the Commission in the Public Reference Room or may be viewed on the Commission's Web site at *http://www.ferc.gov* using the ''eLibrary'' link. Enter the docket number, excluding the last three digits, in the docket number field to access the document. For assistance, contact FERC Online Support at *FERCOnlineSupport@ferc.gov* or toll-free at 1–866–208–3676, or for TTY, (202) 502–8659. A copy is also available for inspection and reproduction at the address in item h above.

You may also register online at *http://www.ferc.gov/docs-filings/esubscription.asp* to be notified via e-mail of new filings and issuances related to this or other pending projects. For assistance, contact FERC Online Support.

n. Scoping Process

The Commission intends to prepare an Environmental Impact Statement (EIS) on the project in accordance with the National Environmental Policy Act (NEPA). The EIS will consider both site-specific and cumulative environmental impacts and reasonable alternatives to the proposed action. Our intent is for the planned scoping meetings to satisfy the NEPA scoping requirements.

Scoping Meetings

Commission staff will conduct two scoping meetings. All interested individuals, organizations, and agencies are invited to attend one or both of the meetings, and to assist the staff in identifying the scope of the environmental issues that should be analyzed in the EIS. The times and locations of these meetings are as follows:

Daytime Scoping Meeting

When: February 11, 2009, 9–11 a.m. (MST).

Where: Doubletree Hotel—Boise Riverside, 2900 Chinden Blvd., Boise, Idaho.

Evening Scoping Meeting

When: February 10, 2009, 7–9 p.m. (MST).

Where: Doubletree Hotel—Boise Riverside, 2900 Chinden Blvd., Boise, Idaho.

Scoping Document 1 (SD1), which outlines the subject areas to be addressed in the environmental document, was distributed to the parties on the Commission's mailing list. Copies of SD1 will be available at the scoping meetings, or may be viewed on the Web at *http://www.ferc.gov* using the ''eLibrary'' link (see item m above). Based on all oral and written comments, a Scoping Document 2 (SD2) will be issued. SD2 will include a list of issues identified through the scoping process.

Site Visit

The Applicant and FERC staff will conduct a project site visit beginning at 9 a.m. on February 10, 2008. Participants will meet at the overlook above Swan Falls dam at 9 a.m. To reach the meeting site, take I–84 from Boise, turn south at Exit 44 onto S. Meridian Road (ID–69) toward Kuna, follow ID–69 as it becomes E. Avalon Road in Kuna, turn south onto S. Swan

Falls Road, and follow Swan Falls Road about 19 miles to the overlook above the dam. Allow 60 to 75 minutes for the drive from Boise. All participants are responsible for their own transportation. The site visit will take 3 to 4 hours.

Objectives

At the scoping meetings, the staff will: (1) Summarize the environmental issues tentatively identified for analysis in the EIS; (2) solicit from the meeting participants all available information, especially quantifiable data, on the resources at issue; (3) encourage statements from experts and the public on issues that should be analyzed in the EIS, including viewpoints in opposition to, or in support of, the staff's preliminary views; (4) determine the resource issues to be addressed in the EIS; and (5) identify those issues that require a detailed analysis, as well as those issues that do not require a detailed analysis.

Meeting Procedures

The meetings are recorded by a stenographer and become part of the formal record of the Commission proceeding on the project.

Individuals, organizations, and agencies with environmental expertise and concerns are encouraged to attend the meetings and to assist the staff in defining and clarifying the issues to be addressed in the EIS.

Kimberly D. Bose,

Secretary.

[FR Doc. E9–752 Filed 1–14–09; 8:45 am]

BILLING CODE 6717–01–P

DEPARTMENT OF ENERGY

Federal Energy Regulatory Commission

[Docket No. EL07–52–000 et al.]

Louisiana Public Service Commission v. Entergy Services, Inc., et al.; Notice of FERC Staff Attendance at Southwest Power Pool Independent Coordinator of Transmission (ICT) Stakeholder Policy Committee Meeting

January 8, 2009.

The Federal Energy Regulatory Commission hereby gives notice that members of its staff may attend the meeting noted below. Their attendance is part of the Commission's ongoing outreach efforts.

ICT Stakeholder Policy Committee Meeting

January 28, 2009 (9 a.m.–3 p.m.) , DFW Hyatt Regency, DFW Airport, Grapevine, TX 75261.

The discussions may address matters at issue in the following proceedings:

Docket No. EL07–52	Louisiana Public Service Commission v. Entergy Services, Inc.
Docket No. OA07–32	Entergy Services, Inc.
Docket No. ER05–1065	Entergy Services, Inc.
Docket No. EL00–66	Louisiana Public Service Commission v. Entergy.
Docket No. EL05–15	Arkansas Electric Cooperative, Corp. v. Entergy Arkansas, Inc.
Docket No. ER08–844	Entergy Services, Inc.
Docket No. EL01–88	Louisiana Public Service Commission v. Entergy.
Docket No. EL08–59	ConocoPhillips v. Entergy Services, Inc.
Docket No. EL08–60	Union Electric v. Entergy Services, Inc.
Docket No. OA08–92	Entergy Services, Inc.
Docket No. OA08–75	Entergy Services, Inc.
Docket No. ER07–1252	Entergy Services, Inc.
Docket No. ER08–774	Entergy Services, Inc.
Docket No. ER08–1006	Entergy Services, Inc.
Docket No. ER08–1056	Entergy Services, Inc.
Docket No. ER08–1057	Entergy Services, Inc.
Docket No. ER07–682	Entergy Services. Inc.
Docket No. EL08–72	NRG Energy, Inc. v. Entergy Services, Inc.
Docket No. EL08–84	AEEC v. Entergy Services, Inc.
Docket No. ER08–513	Entergy Services, Inc.
Docket No. OA08–149	Entergy Operating Companies.
Docket No. ER08–767	Entergy Services, Inc.
Docket No. OA08–59	Entergy Services, Inc.
Docket No. ER07–956	Entergy Services, Inc.
Docket No. EL08–91	AEEC v. Entergy Services, Inc.
Docket No. ER09–372	Entergy Services, Inc.
Docket No. ER09–435	Entergy Services, Inc.
Docket No. ER09–448	Entergy Services, Inc.
Docket No. ER09–449	Entergy Services, Inc.

These meetings are open to the public.

For more information, contact Patrick Clarey, Office of Energy Market Regulation, Federal Energy Regulatory Commission at (317) 249–5937 or *patrick.clarey@ferc.gov.*

Kimberly D. Bose,

Secretary.

[FR Doc. E9–704 Filed 1–14–09; 8:45 am]

BILLING CODE 6717–01–P

DEPARTMENT OF ENERGY

Federal Energy Regulatory Commission

[Docket No. ID–5949–000]

Miller, Forrest E.; Notice of Filing

January 9, 2009.

Take notice that on January 5, 2009, Forrest E. Miller submitted for filing, an application for authority to hold interlocking positions, pursuant to section 305(b) of the Federal Power Act, 18 CFR part 45 (2008) and 18 CFR 385.204 (2008) of the Commission's regulations.

Any person desiring to intervene or to protest this filing must file in accordance with Rules 211 and 214 of the Commission's Rules of Practice and Procedure (18 CFR 385.211, 385.214). Protests will be considered by the Commission in determining the appropriate action to be taken, but will not serve to make protestants parties to the proceeding. Any person wishing to become a party must file a notice of intervention or motion to intervene, as appropriate. Such notices, motions, or protests must be filed on or before the comment date. On or before the comment date, it is not necessary to serve motions to intervene or protests on persons other than the Applicant.

The Commission encourages electronic submission of protests and interventions in lieu of paper using the ''eFiling'' link at *http://www.ferc.gov.* Persons unable to file electronically should submit an original and 14 copies of the protest or intervention to the Federal Energy Regulatory Commission, 888 First Street, NE., Washington, DC 20426.

This filing is accessible on-line at *http://www.ferc.gov,* using the ''eLibrary'' link and is available for review in the Commission's Public Reference Room in Washington, DC. There is an ''eSubscription'' link on the Web site that enables subscribers to receive e-mail notification when a document is added to a subscribed docket(s). For assistance with any FERC Online service, please e-mail *FERCOnlineSupport@ferc.gov,* or call (866) 208–3676 (toll free). For TTY, call (202) 502–8659.

Comment Date: 5 p.m. Eastern Time on January 26, 2009.

Kimberly D. Bose,

Secretary.

[FR Doc. E9–746 Filed 1–14–09; 8:45 am]

BILLING CODE 6717–01–P

DEPARTMENT OF ENERGY

Federal Energy Regulatory Commission

Notice of FERC Staff Attendance at Southwest Power Pool Board of Directors/Members Committee Meeting and Southwest Power Pool Regional State Committee Meeting

January 9, 2009.

The Federal Energy Regulatory Commission hereby gives notice that members of its staff may attend the meetings of the Southwest Power Pool (SPP) Regional State Committee, and of the SPP Members Committee and SPP Board of Directors, as noted below. Their attendance is part of the Commission's ongoing outreach efforts.

SPP Regional State Committee Meeting

January 26, 2009 (1 p.m.—5 p.m., CST), Marriott Las Colinas, 223 West Las Colinas Blvd., Irving, TX 75039, 972–831–0000.

SPP Board of Directors—Members Committee Meeting

January 27, 2009 (8:30 a.m.—3 p.m., CST), Marriott Las Colinas, 223 West Las Colinas Blvd., Irving, TX 75039, 972–831–0000.

The discussions may address matters at issue in the following proceedings:

Docket No. ER06–451, *Southwest Power Pool, Inc.*
Docket Nos. ER07–319 and EL07–73, *Southwest Power Pool, Inc.*
Docket No. ER07–371, *Southwest Power Pool, Inc.*
Docket No. ER07–1255, *Southwest Power Pool, Inc.*
Docket No. ER08–923, *Southwest Power Pool, Inc.*
Docket No. ER08–1307, *Southwest Power Pool, Inc.*
Docket No. ER08–1308, *Southwest Power Pool, Inc.*
Docket No. ER08–1357, *Southwest Power Pool, Inc.*
Docket No. ER08–1358, *Southwest Power Pool, Inc.*
Docket No. ER08–1419, *Southwest Power Pool, Inc.*
Docket No. ER08–1516, *Southwest Power Pool, Inc.*
Docket No. EL08–80, *Oklahoma Corporation Commission.*
Docket No. ER09–35, *Tallgrass Transmission LLC.*
Docket No. ER09–36, *Prairie Wind Transmission LLC.*
Docket No. ER09–79, *Southwest Power Pool, Inc.*
Docket No. ER09–262, *Southwest Power Pool, Inc.*
Docket No. ER09–336, *Southwest Power Pool, Inc.*
Docket No. ER09–342, *Southwest Power Pool, Inc.*
Docket No. ER09–443, *Southwest Power Pool, Inc.*
Docket No. OA08–5, *Southwest Power Pool, Inc.*
Docket No. OA08–60, *Southwest Power Pool, Inc.*
Docket No. OA08–61, *Southwest Power Pool, Inc.*
Docket No. OA08–104, *Southwest Power Pool, Inc.*
Docket No. ER09–439, *Southwest Power Pool, Inc.*
Docket No. ER09–441, *Southwest Power Pool, Inc.*
Docket No. ER09–442, *Southwest Power Pool, Inc.*
Docket No. ER09–463, *Southwest Power Pool, Inc.*
Docket No. ER09–493, *Southwest Power Pool, Inc.*
Docket No. ER09–495, *Southwest Power Pool, Inc.*

These meetings are open to the public.

For more information, contact Patrick Clarey, Office of Energy Market Regulation, Federal Energy Regulatory Commission at (317) 249–5937 or *patrick.clarey@ferc.gov.*

Kimberly D. Bose,

Secretary.

[FR Doc. E9–747 Filed 1–14–09; 8:45 am]

BILLING CODE 6717–01–P

DEPARTMENT OF ENERGY

Federal Energy Regulatory Commission

[Docket No. PR09–10–000]

Michigan Consolidated Gas Company; Notice of Petition for Rate Approval

January 9, 2009.

Take notice that on December 23, 2008, Michigan Consolidated Gas Company (MichCon) filed a petition for rate approval pursuant to Section 284.123(b)(2) of the Commission's Regulations for authorization to charge market-based rates for the interstate storage and storage-related services MichCon provides under its Order No. 63 blanket certificate.

MichCon requests approval of its proposed rates as being fair and equitable on the basis of a showing that it lacks market power and that competitive forces will constrain the rates it charges.

MichCon states that it is a Hinshaw pipeline, within the meaning of Section 1(c) of the Natural Gas Act, and that it has been granted an Order No. 63 blanket certificate to provide interstate transportation and storage services. MichCon proposes to make its market-based rates effective as of December 23, 2008.

Any person desiring to participate in this rate proceeding must file a motion to intervene or to protest this filing in accordance with Rules 211 and 214 of the Commission's Rules of Practice and Procedure (18 CFR 385.211 and 385.214). Protests will be considered by the Commission in determining the appropriate action to be taken, but will not serve to make protestants parties to the proceeding. Any person wishing to become a party must file a notice of intervention or motion to intervene, as appropriate. Such notices, motions, or protests must be filed on or before the date as indicated below. Anyone filing an intervention or protest must serve a copy of that document on the Applicant. Anyone filing an intervention or protest on or before the intervention or protest date need not serve motions to intervene or protests on persons other than the Applicant.

The Commission encourages electronic submission of protests and interventions in lieu of paper using the ''eFiling'' link at *http://www.ferc.gov.* Persons unable to file electronically should submit an original and 14 copies of the protest or intervention to the Federal Energy Regulatory Commission, 888 First Street, NE., Washington, DC 20426.

This filing is accessible on-line at *http://www.ferc.gov,* using the ''eLibrary'' link and is available for review in the Commission's Public Reference Room in Washington, DC. There is an ''eSubscription'' link on the Web site that enables subscribers to receive e-mail notification when a document is added to a subscribed docket(s). For assistance with any FERC Online service, please e-mail *FERCOnlineSupport@ferc.gov,* or call (866) 208–3676 (toll free). For TTY, call (202) 502–8659.

Comment Date: 5 p.m. Wednesday, January 21, 2009.

Kimberly D. Bose,

Secretary.

[FR Doc. E9–745 Filed 1–14–09; 8:45 am]

BILLING CODE 6717–01–P

FEDERAL COMMUNICATIONS COMMISSION

Notice of Public Information Collection(s) Being Reviewed by the Federal Communications Commission for Extension Under Delegated Authority, Comments Requested

January 6, 2009.

SUMMARY: The Federal Communications Commission, as part of its continuing effort to reduce paperwork burdens, invites the general public and other Federal agencies to take this opportunity to comment on the following information collection, as required by the Paperwork Reduction Act of 1995 (PRA), Public Law No. 104–13. An agency may not conduct or sponsor a collection of information unless it displays a currently valid control number. No person shall be subject to any penalty for failing to comply with a collection of information that does not display a valid control number. Comments are requested concerning (a) whether the proposed collection of information is necessary for the proper performance of the functions of the Commission, including whether the information shall have practical utility; (b) the accuracy of the Commission's burden estimate; (c) ways to enhance the quality, utility, and clarity of the information collected; and (d) ways to minimize the burden of the collection of information on the respondents, including the use of automated collection techniques or other forms of information technology.

DATES: Written PRA comments should be submitted on or before March 16, 2009. If you anticipate that you will be submitting comments, but find it difficult to do so within the period of time allowed by this notice, you should advise the contact listed below as soon as possible.

ADDRESSES: Interested parties may submit all PRA comments by e-mail or U.S. post mail. To submit your comments by e-mail, send them to *PRA@fcc.gov* and/or *Cathy.Williams@fcc.gov.* To submit your comments by U.S. mail, mark them to the attention of Cathy Williams, Federal Communications Commission, Room 1–C823, 445 12th Street, SW., Washington, DC 20554.

FOR FURTHER INFORMATION CONTACT: For additional information about the information collection(s), contact Cathy Williams at (202) 418–2918 or send an e-mail to *PRA@fcc.gov* and/or *Cathy.Williams@fcc.gov.*

SUPPLEMENTARY INFORMATION: *OMB Control Number:* 3060–0737.

Title: Disclosure Requirements for Information Services Provided Under a Presubscription or Comparable Arrangement.

Form Number: Not applicable.

Type of Review: Extension of a currently approved collection.

Respondents: Business or other for-profit entities.

Number of Respondents and Responses: 1,000 respondents; 1,000 responses.

Estimated Time per Response: 4.5 hours.

Frequency of Response: Annual reporting requirement; On occasion reporting requirement; Third party disclosure requirement.

Total Annual Burden: 4,500 hours.

Total Annual Cost: None.

Obligation to Respond: Voluntary. The statutory authority for this collection of information is contained in 47 U.S.C. 228.

Nature and Extent of Confidentiality: An assurance of confidentiality is not offered because this information collection does not require the collection of personally identifiable information (PII) from individuals.

Privacy Impact Assessment: No impact(s).

Needs and Uses: Section 64.1501(b) defines a presubscription or comparable arrangement as a contractual agreement in which an information service provider makes specified disclosures to consumers when offering ''presubscribed'' information services.

The disclosures are intended to ensure that consumers receive information regarding the terms and conditions associated with these services before they enter into contracts to subscribe to them.

OMB Control Number: 3060–1041.

Title: Remedial Measures for Failure to Construct Digital Television Stations (DTV Policy Statement).

Form Number: Not applicable.

Type of Review: Extension of a currently approved collection.

Respondents: Businesses or other for-profit entities; Not-for-profit institutions.

Number of Respondents and Responses: 400 respondents; 800 responses.

Estimated Time per Response: 0.50–2 hours.

Frequency of Response: On occasion reporting requirement.

Obligation to Respond: Required to obtain or retain benefits. The statutory authority for this collection of information is contained in Sections 154(i), 303, 307, 309, 319 and 336 of the Communications Act of 1934, as amended.

Total Annual Burden: 460 hours.

Total Annual Cost: $304,000.

Privacy Act Impact Assessment: No impact(s).

Nature and Extent of Confidentiality: There is no need for confidentiality with this collection of information.

Needs and Uses: On April 16, 2003, the FCC released a Report and Order and Memorandum Opinion and Order on Reconsideration, In the Matter of Remedial Steps for Failure to Comply with Digital Television Construction Schedule, MM Docket No. 02–113, FCC 03–77 (''R&O''). The Commission adopted a series of remedial measures for stations that fail to construct their digital television (DTV) facilities in a timely fashion and fail to justify an extension of their DTV construction deadline. Stations will be subject to periodic reporting requirements.

Under the first step, the Commission will deny the request for an unqualified extension and admonish the station for its failure to comply with its DTV construction obligation. The station must submit a report within thirty days outlining the steps it intends to take to complete construction and the approximate date that it expects to reach each of these construction milestones. Sixty days after its initial report, the station must submit a report detailing its progress on meeting its proposed construction milestones and justifying any delays it has encountered.

Under the second step in the approach, if the station has not come into compliance with the DTV construction rule within a six-month period, then, absent extraordinary and compelling circumstances, the Commission will issue a Notice of Apparent Liability for forfeiture to the licensee and require that the station report every thirty days on its proposed construction milestones and its efforts to meet those milestones. Once again, failure to adequately demonstrate that the station was taking all reasonable steps towards construction and to justify any additional delays that were encountered will result in the imposition of additional sanctions.

Under the third and final step in the approach, if the station still had failed to come into compliance with the DTV construction rule within an additional six-month period of time (i.e., one year from the date of the formal admonition), then, absent extraordinary and compelling circumstances, the Commission will consider its construction permit for its DTV facilities to have expired and will rescind the station's DTV authorization. The Commission concluded that no hearing was necessary prior to rescinding the station's DTV authorization. The Commission also concluded that it would not make the station's vacant DTV allotment available. The Commission also announced that the station will be required to surrender its analog authorization at the end of the DTV transition.

Federal Communications Commission.

Marlene H. Dortch,

Secretary.

[FR Doc. E9–792 Filed 1–14–09; 8:45 am]

BILLING CODE 6712–01–P

FEDERAL COMMUNICATIONS COMMISSION

Public Information Collection Requirement Submitted to OMB for Review and Approval, Comments Requested

January 6, 2009.

SUMMARY: The Federal Communications Commission, as part of its continuing effort to reduce paperwork burden, invites the general public and other Federal agencies to take this opportunity to comment on the following information collection, as required by the Paperwork Reduction Act of 1995, Public Law 104–13. An agency may not conduct or sponsor a collection of information unless it displays a currently valid control number. No person shall be subject to any penalty for failing to comply with a collection of information subject to the Paperwork Reduction Act (PRA) that does not display a valid control number. Comments are requested concerning (a) Whether the proposed collection of information is necessary for the proper performance of the functions of the Commission, including whether the information shall have practical utility; (b) the accuracy of the Commission's burden estimate; (c) ways to enhance the quality, utility, and clarity of the information collected; and (d) ways to minimize the burden of the collection of information on the respondents, including the use of automated collection techniques or other forms of information technology.

DATES: Written Paperwork Reduction Act (PRA) comments should be submitted on or before February 17, 2009. If you anticipate that you will be submitting comments, but find it difficult to do so within the period of time allowed by this notice, you should advise the contacts listed below as soon as possible.

ADDRESSES: Direct all PRA comments to Nicholas A. Fraser, Office of Management and Budget, via Internet at *Nicholas_A._Fraser@omb.eop.gov* or via fax at (202) 395–5167 and to Cathy Williams, Federal Communications Commission, Room 1–C823, 445 12th Street, SW., Washington, DC or via Internet at *Cathy.Williams@fcc.gov or PRA@fcc.gov.*

To view a copy of this information collection request (ICR) submitted to OMB: (1) Go to the Web page *http://www.reginfo.gov/public/do/PRAMain,* (2) look for the section of the Web page called ''Currently Under Review,'' (3) click on the downward-pointing arrow in the ''Select Agency'' box below the ''Currently Under Review'' heading, (4) select ''Federal Communications Commission'' from the list of agencies presented in the ''Select Agency'' box, (5) click the ''Submit'' button to the right of the ''Select Agency'' box, (6) when the list of FCC ICRs currently under review appears, look for the title of this ICR (or its OMB control number, if there is one) and then click on the ICR Reference Number to view detailed information about this ICR.''

FOR FURTHER INFORMATION CONTACT: For additional information or copies of the information collection(s), contact Cathy Williams at (202) 418–2918.

SUPPLEMENTARY INFORMATION:

OMB Control Number: 3060–0703.

Title: Determining Costs of Regulated Cable Equipment and Installation.

Form Number: FCC Form 1205.

Type of Review: Extension of a currently approved collection.

Respondents: Businesses or other for-profit entities.

Number of Respondents and Responses: 4,000 respondents; 6,000 responses.

Estimated Time per Response: 4–12 hours.

Frequency of Response: Recordkeeping requirement; Annual reporting requirement, Third party disclosure requirement.

Obligation to Respond: Required to obtain or retain benefits. The statutory authority for this information collection is contained in the Telecommunications Act of 1996 and 623(a)(7) of the Communications Act of 1934, as amended.

Total Annual Burden: 52,000 hours.

Total Annual Cost: $900,000.

Privacy Act Impact Assessment: No impact(s).

Nature and Extent of Confidentiality: There is no need for confidentiality.

Needs and Uses: Information derived from FCC Form 1205 filings is used to facilitate the review of equipment and installation rates. This information is then reviewed by each cable system's respective local franchising authority.

Section 76.923 records are kept by cable operators in order to demonstrate that charges for the sale and lease of equipment for installation have been developed in accordance with the Commission's rules.

OMB Control Number: 3060–0863.

Title: Satellite Delivery of Network Signals to Unserved Households for Purposes of the Satellite Home Viewer's Act (SHVA).

Form No.: N/A.

Type of Review: Extension of a currently approved collection.

Respondents: Business or other for-profit.

Number of Respondents/Responses: 848 respondents; 250,000 responses.

Estimated Time per Response: 0.50 hours.

Frequency of Response: Recordkeeping requirement; On occasion reporting requirement.

Obligation to Respond: Required to obtain or retain benefits. The statutory authority for this collections is contained in the Satellite Home Viewer Act, 17 U.S.C. 119. The Satellite Home Viewer Act is an amendment of the Copyright Act.

Total Annual Burden: 125,000 hours.

Annual Cost Burden: None.

Privacy Impact Assessment: No impact(s).

Nature and Extent of Confidentiality: There is no need for confidentiality.

Needs and Uses: 47 CFR 73.686 describes a method for measuring signal strength at a household so that the satellite and broadcast industries and consumers would have a uniform method for making an actual determination of the signal strength that a household received. The information gathered as part of the Grade B signal strength tests will be used to indicate whether consumers are ''unserved'' by over-the-air network signals. The written records of test results will be made after testing and predicting the strength of a television station's signal. Parties impacted by the test results will be consumers; parties using the written test results will primarily be the satellite and broadcasting industries.

Federal Communications Commission.

Marlene H. Dortch,

Secretary.

[FR Doc. E9–794 Filed 1–14–09; 8:45 am]

BILLING CODE 6712–01–P

FEDERAL COMMUNICATIONS COMMISSION

Notice of Public Information Collection(s) Being Reviewed by the Federal Communications Commission, Comments Requested

January 6, 2009.

SUMMARY: The Federal Communications Commission, as part of its continuing effort to reduce paperwork burdens, invites the general public and other Federal agencies to take this opportunity to comment on the following information collection, as required by the Paperwork Reduction Act (PRA) of 1995, Public Law No. 104–13. An agency may not conduct or sponsor a collection of information unless it displays a currently valid control number. Pursuant to the PRA, no person shall be subject to any penalty for failing to comply with a collection of information that does not display a valid control number. Comments are requested concerning (a) whether the proposed collection of information is necessary for the proper performance of the functions of the Commission, including whether the information shall have practical utility; (b) the accuracy of the Commission's burden estimate; (c) ways to enhance the quality, utility, and clarity of the information collected; and (d) ways to minimize the burden of the collection of information on the respondents, including the use of automated collection techniques or other forms of information technology.

DATES: Written PRA comments should be submitted on or before March 16, 2009. If you anticipate that you will be submitting comments, but find it difficult to do so within the period of time allowed by this notice, you should advise the contact listed below as soon as possible.

ADDRESSES: Interested parties may submit all PRA comments by e-mail or U.S. mail. To submit your comments by e-mail, send them to *PRA@fcc.gov*. To submit your comments by U.S. mail, mark them to the attention of Cathy Williams, Federal Communications Commission, Room 1–C823, 445 12th Street, SW., Washington, DC 20554.

FOR FURTHER INFORMATION CONTACT: For additional information about the information collection, send an e-mail to *PRA@fcc.gov* or contact Cathy Williams at 202–418–2918.

SUPPLEMENTARY INFORMATION:

OMB Control Number: 3060–0573.

Title: Application for Franchise Authority Consent to Assignment or Transfer of Control of Cable Television Franchise.

Form Number: FCC Form 394.

Type of Review: Extension of a currently approved collection.

Respondents: Business of other for-profit entities; State, Local or Tribal Government.

Number of Respondents and Responses: 2,000 respondents; 1,000 responses.

Estimated Time per Response: 1–5 hours.

Frequency of Response: Third party disclosure requirement.

Obligation to Respond: Required to obtain or retain benefits. The statutory authority for this information collection is contained in Section 4(i) and 617 of the Communications Act of 1934, as amended.

Total Annual Burden: 7,000 hours.

Total Annual Costs: $375,000.

Privacy Impact Assessment(s): No impact(s).

Nature and Extent of Confidentiality: There is no need for confidentiality with this collection of information.

Needs and Uses: Cable operators use FCC Form 394 to apply to the local franchise authority (LFA) for approval to assign or transfer control of a cable television system. With the information provided by Form 394, LFAs can restrict profiteering transactions and other transfers that are likely to have an adverse effect on cable rates or service in the franchise area.

OMB Control Number: 3060–0754.

Title: Children's Television Programming Report.

Form Number: FCC Form 398.

Type of Review: Extension of a currently approved collection.

Respondents: Businesses or other for-profit entities.

Number of Respondents and Responses: 1,962 respondents; 7,848 responses.

Estimated Time per Response: 12 hours.

Frequency of Response: Recordkeeping requirement; Quarterly reporting requirement.

Obligation to Respond: Required to obtain or retain benefits. Statutory authority for this information collection is contained in 154(i) and 303 of the Communications Act of 1934, as amended.

Total Annual Burden: 94,176 hours.

Total Annual Cost: $3,139,200.

Privacy Act Impact Assessment: No impact(s).

Nature and Extent of Confidentiality: There is no need for confidentiality with this collection of information.

Needs and Uses: Commercial television broadcast stations and Class

A television broadcast stations are both required to file FCC Form 398. FCC Form 398 is a standardized form that provides a consistent format for reporting by all licensees, and facilitates efforts by the public and the FCC to monitor compliance with the Children's Television Act.

These commercial television broadcast station licensees and the Class A television broadcast station licensees both use FCC Form 398 to identify the individual station, and to identify the children's educational and informational programs, which the station broadcasts on both the regularly scheduled and preempted core programming, to meet the station's obligation under the Children's Television Act of 1990 (CTA).

Each quarter, the licensee is required to place in its public inspection file a ''Children's Television Programming Report'' and to file the FCC Form 398 each quarter with the Commission. The licensee must also complete a ''Preemption Report'' for each preempted core program during the quarter. This ''Preemption Report'' requests information on the date of each preemption, if the program was rescheduled, the date and time the program was aired, and the reason for the preemption.

Federal Communications Commission.

Marlene H. Dortch,

Secretary.

[FR Doc. E9–795 Filed 1–14–09; 8:45 am]

BILLING CODE 6712–01–P

FEDERAL COMMUNICATIONS COMMISSION

Notice of Public Information Collection(s) Being Reviewed by the Federal Communications Commission, Comments Requested

January 9, 2009.

SUMMARY: The Federal Communications Commission, as part of its continuing effort to reduce paperwork burden invites the general public and other Federal agencies to take this opportunity to comment on the following information collection(s), as required by the Paperwork Reduction Act (PRA) of 1995, 44 U.S.C. 3501–3520. An agency may not conduct or sponsor a collection of information unless it displays a currently valid control number. No person shall be subject to any penalty for failing to comply with a collection of information subject to the Paperwork Reduction Act (PRA) that does not display a valid control number. Comments are requested concerning (a) whether the proposed collection of information is necessary for the proper performance of the functions of the Commission, including whether the information shall have practical utility; (b) the accuracy of the Commission's burden estimate; (c) ways to enhance the quality, utility, and clarity of the information collected; and (d) ways to minimize the burden of the collection of information on the respondents, including the use of automated collection techniques or other forms of information technology.

DATES: Written Paperwork Reduction Act (PRA) comments should be submitted on or before March 16, 2009. If you anticipate that you will be submitting PRA comments, but find it difficult to do so within the period of time allowed by this notice, you should advise the FCC contact listed below as soon as possible.

ADDRESSES: Direct all PRA comments to Nicholas A. Fraser, Office of Management and Budget, (202) 395–5887, or via fax at 202–395–5167 or via internet at *Nicholas_A._Fraser@omb.eop.gov* and to *Judith-B.Herman@fcc.gov,* Federal Communications Commission, and an e-mail to *PRA@fcc.gov.*

FOR FURTHER INFORMATION CONTACT: For additional information, contact Judith B. Herman at 202–418–0214 or via the Internet at *Judith-B.Herman@fcc.gov.*

SUPPLEMENTARY INFORMATION:

OMB Control Number: 3060–0763.

Title: ARMIS Customer Satisfaction Report.

Report No.: FCC 43–06.

Type of Review: Extension of a currently approved collection.

Respondents: Business or other for-profit.

Number of Respondents: 7 respondents; 7 responses.

Estimated Time per Response: 720 hours.

Frequency of Response: Annual reporting requirement.

Obligation to Respond: Mandatory. Statutory authority for these information collections are contained in 47 U.S.C. sections 161, 219, and 220.

Total Annual Burden: 5,040 hours.

Total Annual Cost: N/A.

Privacy Act Impact Assessment: N/A.

Nature and Extent of Confidentiality: The Commission contends that areas in which detailed information is required are fully subject to regulation and the issue of data being regarded as sensitive will arise in special circumstances only. In such circumstances, the respondent is instructed on the appropriate procedures to follow to safeguard confidential data. Respondents may request confidential treatment of such information under 47 CFR 0.459 of the Commission's rules.

Needs and Uses: The Commission will submit this information collection to the Office of Management and Budget (OMB) after this 60 day comment period in order to obtain the full three year clearance from them. The Commission is requesting an extension (no change in the annual reporting requirement). There is no change in the number of respondents/responses and burden hours.

In the Commission's Memorandum and Opinion and Order and Notice of Proposed Rulemaking, WC Docket No. 08–190, FCC 08–203, released September 6, 2008, the Commission granted in significant part AT&T's petition for forbearance from the ARMIS service quality and infrastructure reporting requirements, subject to certain conditions. In addition, the Commission determined that its conclusions underlying its forbearance decision for AT&T also hold true for the other carriers required to file ARMIS Reports 43–05, 43–06, 43–07, and 43–08. Subject to certain conditions, the Commission found that the criteria of section 10(A)(1) and (a)(2) are satisfied. Given the burdens associated with the data reporting, and in light of the commitments of the reporting carriers, and other continuing regulatory requirements, the Commission determined that forbearance to be in the public interest.

The Commission noted that the reporting carriers have committed to continue customer satisfaction data and to file those data publicly, through ARMIS Report 43–06 filing for 24 months from the effective date of the Commission's order. Further, the Commission noted that this will ensure continuity with regard to the customer satisfaction data that the Commission has collected up to this point, and affords the Commission a reasonable period of time to consider whether to adopt industry-wide reporting requirements. The Commission therefore adopted that commitment as a condition of its forbearance. Finally, the Commission granted the same forbearance relief to any similarly situated carriers who made the same commitment and made clear that the relief that the Commission granted is not otherwise conditional.

In the NPRM portion of the Commission's September 6, 2008 Order placed in the **Federal Register** on October 15, 2008 (73 FR 60997), the Commission recognized the possibility that customer satisfaction data contained in ARMIS Report 43–06 might be useful to consumers to help

them make informed choices in a competitive market, but only if available from the entire relevant industry. The Commission tentatively concluded that it should collect this type of information, and seek comments on specific information that the Commission should collect. The Commission also asked for comments on the appropriate mechanism for such data collection.

The ARMIS Report 43–06 provides the necessary detail to enable the Commission to fulfill its regulatory responsibilities. This report reflects the results of customer satisfaction surveys conducted by individual carriers from residential and business customers. This report captures trends in service quality. Automated reporting of these data greatly enhances the Commission's ability to process and analyze the extensive amounts of data that are needed to administer its rules. Automating and organizing data submitted to the Commission facilitates the timely and efficient analysis of revenue requirements, rate-of-return and price caps, and provides an improved basis for auditing and other oversight functions.

Federal Communications Commission.

Marlene H. Dortch,

Secretary.

[FR Doc. E9–799 Filed 1–14–09; 8:45 am]

BILLING CODE 6712–01–P

FEDERAL COMMUNICATIONS COMMISSION

Notice of Public Information Collection(s) Being Reviewed by the Federal Communications Commission, Comments Requested

January 9, 2009.

SUMMARY: The Federal Communications Commission, as part of its continuing effort to reduce paperwork burdens, invites the general public and other Federal agencies to take this opportunity to comment on (PRA) of 1995, Public Law No. 104–13. An agency may not conduct or sponsor a collection of information unless it displays a currently valid control number. Subject to the PRA, no person shall be subject to any penalty for failing to comply with a collection of information that does not display a valid control number. Comments are requested concerning (a) whether the proposed collection of information is necessary for the proper performance of the functions of the Commission, including whether the information shall have practical utility; (b) the accuracy of the Commission's burden estimate; (c) ways to enhance the quality, utility, and clarity of the information collected; and (d) ways to minimize the burden of the collection of information on the respondents, including the use of automated collection techniques or other forms of information technology.

DATES: Written PRA comments should be submitted on or before March 16, 2009. If you anticipate that you will be submitting comments, but find it difficult to do so within the period of time allowed by this notice, you should advise the contact listed below as soon as possible.

ADDRESSES: You may submit all PRA comments by e-mail or U.S. post mail. To submit your comments by e-mail, send them to *PRA@fcc.gov.* To submit your comments by U.S. mail, mark them to the attention of Cathy Williams, Federal Communications Commission, Room 1–C823, 445 12th Street, SW., Washington, DC 20554.

FOR FURTHER INFORMATION CONTACT: For additional information about the information collection(s), contact Cathy Williams at (202) 418–2918 or send an e-mail to *PRA@fcc.gov.*

SUPPLEMENTARY INFORMATION:

OMB Control Number: 3060–0208.

Title: Section 73.1870, Chief Operators.

Form Number: Not applicable.

Type of Review: Extension of a currently approved collection.

Respondents: Business and other for-profit entities; Not-for-profit institutions.

Number of Respondents and Responses: 18,498 respondents; 36,996 responses.

Estimated Time per Response: 0.166–26 hours.

Frequency of Response: Recordkeeping requirement; Third party disclosure requirement; Weekly reporting requirement.

Total Annual Burden: 484,019 hours.

Total Annual Costs: None.

Obligation to Respond: Required to obtain or retain benefits. The statutory authority for this collection of information is contained in Section 154(i) of the Communications Act of 1934, as amended.

Nature and Extend of Confidentiality: There is no need for confidentiality with this collection of information.

Privacy Impact Assessment(s): No impact(s).

Needs and Uses: 47 CFR 73.1870 requires that the licensee of an AM, FM, or TV broadcast station designate a chief operator of the station. Section 73.1870(b)(3) requires that this designation must be in writing and posted with the station license. Section 73.1230 requires that all licensees post station licenses ''at the place the licensee considers the principal control point of the transmitter'' generally at the transmitter site. Agreements with chief operators serving on a contract basis must be in writing with a copy kept in the station files. Section 73.1870(c)(3) requires that the chief operator, or personnel delegated and supervised by the chief operator, review the station records at least once each week to determine if required entries are being made correctly, and verify that the station has been operated in accordance with FCC rules and the station authorization. Upon completion of the review, the chief operator must date and sign the log, initiate corrective action which may be necessary and advise the station licensee of any condition which is repetitive. The posting of the designation of the chief operator is used by interested parties to readily identify the chief operator. The review of the station records is used by the chief operator, and FCC staff in investigations, to ensure that the station is operating in accordance with its station authorization and the FCC rules and regulations.

Federal Communications Commission.

Marlene H. Dortch,

Secretary.

[FR Doc. E9–801 Filed 1–14–09; 8:45 am]

BILLING CODE 6712–01–P

FEDERAL MARITIME COMMISSION

Ocean Transportation Intermediary License Reissuances

Notice is hereby given that the following Ocean Transportation Intermediary license has been reissued by the Federal Maritime Commission pursuant to section 19 of the Shipping Act of 1984 (46 U.S.C. Chapter 409) and the regulations of the Commission pertaining to the licensing of Ocean Transportation Intermediaries, 46 CFR part 515.

License No.	Name/address	Date reissued
019573NF	Longron Corporation dba Time Logistics, 5415 Hilton Avenue,Temple City, CA 91780	September 18, 2008.

Sandra L. Kusumoto,
Director, Bureau of Certification and Licensing.

[FR Doc. E9–780 Filed 1–14–09; 8:45 am]

BILLING CODE 6730–01–P

FEDERAL MARITIME COMMISSION

Ocean Transportation Intermediary License Revocations

The Federal Maritime Commission hereby gives notice that the following Ocean Transportation Intermediary licenses have been revoked pursuant to section 19 of the Shipping Act of 1984 (46 U.S.C. Chapter 409) and the regulations of the Commission pertaining to the licensing of Ocean Transportation Intermediaries, 46 CFR part 515, effective on the corresponding date shown below:

License Number: 017727F.
Name: American Maritime Services and Supplies, Inc.
Address: 1922 Tigertail Blvd., Bldg. 12, Dania, FL 33004.
Date Revoked: October 29, 2008.
Reason: Failed to maintain a valid bond.

License Number: 014460NF.
Name: Anthem Worldwide Lines, Inc.
Address: 30 Montgomery Street, Jersey City, NJ 07302.
Date Revoked: October 2, 2008.
Reason: Failed to maintain valid bonds.

License Number: 017104N.
Name: Bay Wind Trans, Inc.
Address: 1550 E. Higgins Rd., Ste. 116, Elk Grove Village, IL 60007.
Date Revoked: October 8, 2008.
Reason: Failed to maintain a valid bond.

License Number: 018784F.
Name: Champion Cargo Services, LLC.
Address: 9523 Jamacha Blvd., Spring Valley, CA 91977.
Date Revoked: October 15, 2008.
Reason: Failed to maintain a valid bond.

License Number: 020535F.
Name: Destiny Global Export Corp.
Address: 12 Kingsberry Drive, Somerset, NJ 08873.
Date Revoked: November 13, 2008.
Reason: Failed to maintain a valid bond.

License Number: 021024F.
Name: ES Express Cargo & Multiservices, Inc. dba El Salvador Express Cargo.
Address: 1325 NW. 93rd Ct., Ste. B–112, Doral, FL 33172.
Date Revoked: November 5, 2008.
Reason: Failed to maintain a valid bond.

License Number: 016320N.
Name: Eurotrans Systems, Inc.
Address: 299 Broadway, Ste. 1815, New York, NY 10007.
Date Revoked: December 12, 2008.
Reason: Failed to maintain a valid bond.

License Number: 017234F.
Name: Ever-Swift Worldwide Inc.
Address: Cargo Bldg. 151, Ste. 377, Jamaica, NY 11430.
Date Revoked: November 25, 2008.
Reason: Failed to maintain a valid bond.

License Number: 019470N.
Name: Flexitank Food Grade, Inc.
Address: Centro Distribucion Del Norte, Edif. 1 Carr.
869, Bo. Palmas, Catano, PR 00962.
Date Revoked: March 22, 2007.
Reason: Failed to maintain a valid bond.

License Number: 000971F.
Name: Gateway Agency, Inc.
Address: 2801 NW. 74th Street, Ste 206, Miami, FL 33122.
Date Revoked: December 17, 2008.
Reason: Failed to maintain a valid bond.

License Number: 019412N.
Name: H & T Shipping, Inc.
Address: 7771 Garvey Ave., #D, Rosemead, CA 91770.
Date Revoked: November 22, 2008.
Reason: Failed to maintain a valid bond.

License Number: 007764N.
Name: Helvetia Container Line Inc.
Address: 29 West 30th Street, 12th Fl., New York, NY 10001.
Date Revoked: November 17, 2008.
Reason: Failed to maintain a valid bond.

License Number: 018700N.
Name: J & B International, Inc.
Address: 1507 Carmen Drive, Elk Grove Village, IL 60007.
Date Revoked: November 7, 2008.
Reason: Failed to maintain a valid bond.

License Number: 019468N.
Name: JSJ Express, Inc.
Address: 181 South Franklin Ave., Ste. 201, Valley Stream, NY 11581.
Date Revoked: October 30, 2008.
Reason: Failed to maintain a valid bond.

License Number: 017888N.
Name: Jet Cargo Forwarders International, Inc.
Address: 3100 E 8th Street, Ste. C, National City, CA 91950.
Date Revoked: November 22, 2008.
Reason: Failed to maintain a valid bond.

License Number: 020813N.
Name: King Con Freight Management, LLC.
Address: 9303 Granby Street, Norfolk, VA 23503.
Date Revoked: December 14, 2008.
Reason: Failed to maintain a valid bond.

License Number: 020294N.
Name: La Ocean Freight Inc.
Address: 3428 Vantage Point Drive, Rowland Heights, CA 91748.
Date Revoked: October 26, 2008.
Reason: Failed to maintain a valid bond.

License Number: 017496F.
Name: Load Group International, Inc. dba Bosmas.
Address: 8301 NW. 66th Street, Miami, FL 33166.
Date Revoked: December 13, 2008.
Reason: Failed to maintain a valid bond.

License Number: 012367N.
Name: Maritime Express, Inc.
Address: 12613 Executive Dr., Ste. 700, Stafford, TX 77477.
Date Revoked: November 26, 2008.
Reason: Failed to maintain a valid bond.

License Number: 017615N.
Name: Micom Logistics Inc.
Address: 8008 NW 14th Street, Ste. 8014, Doral, FL 33126.
Date Revoked: October 13, 2008.
Reason: Failed to maintain a valid bond.

License Number: 020166N.
Name: MK Freight Forwarding Inc.
Address: 160 Wallabout Street, Brooklyn, NY 11206.
Date Revoked: November 15, 2008.
Reason: Failed to maintain a valid bond.

License Number: 016298NF.
Name: Neptune Shipping Company.
Address: 12368 E. Valley Blvd., Ste. 104, El Monte, CA 91732.
Date Revoked: November 21, 2008.
Reason: Failed to maintain valid bonds.

License Number: 019481NF.
Name: North Star Forwarding Solutions, LLC.
Address: 9485 Regency Square Blvd., #109, Jacksonville, FL 32225.
Date Revoked: December 5, 2008.
Reason: Failed to maintain valid bonds.

License Number: 017700N.
Name: Peacock Group, Inc.
Address: 2830 Georgian Terr., Marietta, GA 30068
Date Revoked: November 8, 2008.
Reason: Failed to maintain a valid bond.

License Number: 003490F.
Name: Rose International, Inc. dba Rose Maritime Container Line.
Address: 410 Ogden Ave., PhD, Jersey City, NJ 07307.

Date Revoked: October 30, 2008.
Reason: Failed to maintain a valid bond.

License Number: 020489N.
Name: Sunspeed Transportation Inc.
Address: 11421 E. Carson Street, Ste. R, Lakewood, CA 90715.
Date Revoked: October 10, 2008.
Reason: Failed to maintain a valid bond.

License Number: 010664N.
Name: Taby America, Inc.
Address: 1150 Raritan Rd., Ste. 104, Cranford, NJ 07016.
Date Revoked: November 30, 2008.
Reason: Failed to maintain a valid bond.

License Number: 014225NF.
Name: Tri-Star Forwarders Inc. dba Tri-Star Container Line.
Address: 145–54 157th Street, Jamaica, NY 11434.
Date Revoked: November 7, 2008.
Reason: Failed to maintain valid bonds.

License Number: 019416F.
Name: Trust Express (LAX) Inc.
Address: 8915 S. La Cienega Blvd., Ste. A, Inglewood, CA 90301.
Date Revoked: October 11, 2008.
Reason: Failed to maintain a valid bond.

License Number: 021284F.
Name: USTC America, Inc.
Address: 1250 E. 223rd Street, Ste 107, Carson, CA 90745.
Date Revoked: December 7, 2008.
Reason: Failed to maintain a valid bond.

License Number: 007934N.
Name: Wellcorp Express, Inc. dba Wellcorp U.S.A.
Address: 8616 La Tijera Blvd., Ste. 310, Los Angeles, CA 90045.
Date Revoked: November 27, 2008.
Reason: Failed to maintain a valid bond.

License Number: 015047N.
Name: WPC Consolidators, Inc.
Address: 3770 W. Century Blvd, Inglewood, CA 90303.
Date Revoked: December 19, 2008.
Reason: Failed to maintain a valid bond.

Sandra L. Kusumoto,
Director, Bureau of Certification and Licensing.

[FR Doc. E9–774 Filed 1–14–09; 8:45 am]

BILLING CODE 6730–01–P

FEDERAL RESERVE SYSTEM

Formations of, Acquisitions by, and Mergers of Bank Holding Companies

The companies listed in this notice have applied to the Board for approval, pursuant to the Bank Holding Company Act of 1956 (12 U.S.C. 1841 *et seq.*) (BHC Act), Regulation Y (12 CFR Part 225), and all other applicable statutes and regulations to become a bank holding company and/or to acquire the assets or the ownership of, control of, or the power to vote shares of a bank or bank holding company and all of the banks and nonbanking companies owned by the bank holding company, including the companies listed below.

The applications listed below, as well as other related filings required by the Board, are available for immediate inspection at the Federal Reserve Bank indicated. The applications also will be available for inspection at the offices of the Board of Governors. Interested persons may express their views in writing on the standards enumerated in the BHC Act (12 U.S.C. 1842(c)). If the proposal also involves the acquisition of a nonbanking company, the review also includes whether the acquisition of the nonbanking company complies with the standards in section 4 of the BHC Act (12 U.S.C. 1843). Unless otherwise noted, nonbanking activities will be conducted throughout the United States. Additional information on all bank holding companies may be obtained from the National Information Center website at *www.ffiec.gov/nic/*.

Unless otherwise noted, comments regarding each of these applications must be received at the Reserve Bank indicated or the offices of the Board of Governors not later than February 9, 2009.

A. Federal Reserve Bank of Minneapolis (Jacqueline G. King, Community Affairs Officer) 90 Hennepin Avenue, Minneapolis, Minnesota 55480–0291:

1. Eastwood Financial Corporation Employee Profit Sharing and Stock Ownership Plan, Rochester, Minnesota, to become a bank holding company by acquiring additional voting shares, for a total of 27 percent of, Eastwood Financial Corporation, Rochester, Minnesota, and thereby indirectly acquire voting sharess of Eastwood Bank, Kasson, Minnesota.

Board of Governors of the Federal Reserve System, January 12, 2009.

Robert deV. Frierson,
Deputy Secretary of the Board.

[FR Doc. E9–742 Filed 1–14–09; 8:45 am]

BILLING CODE 6210–01–S

FEDERAL TRADE COMMISSION

[File No. 072 3168]

American Nationwide Mortgage Company, Inc.; Analysis of Proposed Consent Order to Aid Public Comment

AGENCY: Federal Trade Commission.
ACTION: Proposed Consent Agreement.

SUMMARY: The consent agreement in this matter settles alleged violations of federal law prohibiting unfair or deceptive acts or practices or unfair methods of competition. The attached Analysis to Aid Public Comment describes both the allegations in the draft complaint and the terms of the consent order—embodied in the consent agreement—that would settle these allegations.

DATES: Comments must be received on or before February 9, 2009.

ADDRESSES: Interested parties are invited to submit written comments. Comments should refer to ''American Nationwide Mortgage, File No. 072 3168,'' to facilitate the organization of comments. A comment filed in paper form should include this reference both in the text and on the envelope, and should be mailed or delivered to the following address: Federal Trade Commission/Office of the Secretary, Room 135-H, 600 Pennsylvania Avenue, N.W., Washington, D.C. 20580. Comments containing confidential material must be filed in paper form, must be clearly labeled ''Confidential,'' and must comply with Commission Rule 4.9(c). 16 CFR 4.9(c) (2005).[1] The FTC is requesting that any comment filed in paper form be sent by courier or overnight service, if possible, because U.S. postal mail in the Washington area and at the Commission is subject to delay due to heightened security precautions. Comments that do not contain any nonpublic information may instead be filed in electronic form by following the instructions on the web-based form at (*http://secure.commentworks.com/ftc-AmericanNationwideMortgage*). To ensure that the Commission consider an electronic comment, you must file it on that web-based form.

The FTC Act and other laws the Commission administers permit the collection of public comments to

[1] The comment must be accompanied by an explicit request for confidential treatment, including the factual and legal basis for the request, and must identify the specific portions of the comment to be withheld from the public record. The request will be granted or denied by the Commission's General Counsel, consistent with applicable law and the public interest. *See* Commission Rule 4.9(c), 16 CFR 4.9(c).

consider and use in this proceeding as appropriate. All timely and responsive public comments, whether filed in paper or electronic form, will be considered by the Commission, and will be available to the public on the FTC website, to the extent practicable, at *www.ftc.gov*. As a matter of discretion, the FTC makes every effort to remove home contact information for individuals from the public comments it receives before placing those comments on the FTC website. More information, including routine uses permitted by the Privacy Act, may be found in the FTC's privacy policy, at (*http://www.ftc.gov/ftc/privacy.shtm*).

FOR FURTHER INFORMATION CONTACT: Carole Reynolds, Bureau of Consumer Protection, 600 Pennsylvania Avenue, NW, Washington, D.C. 20580, (202) 326-3230.

SUPPLEMENTARY INFORMATION: Pursuant to section 6(f) of the Federal Trade Commission Act, 38 Stat. 721, 15 U.S.C. 46(f), and § 2.34 of the Commission Rules of Practice, 16 CFR 2.34, notice is hereby given that the above-captioned consent agreement containing a consent order to cease and desist, having been filed with and accepted, subject to final approval, by the Commission, has been placed on the public record for a period of thirty (30) days. The following Analysis to Aid Public Comment describes the terms of the consent agreement, and the allegations in the complaint. An electronic copy of the full text of the consent agreement package can be obtained from the FTC Home Page (for January 8, 2009), on the World Wide Web, at (*http://www.ftc.gov/os/2009/01/index.htm*). A paper copy can be obtained from the FTC Public Reference Room, Room 130-H, 600 Pennsylvania Avenue, NW, Washington, D.C. 20580, either in person or by calling (202) 326-2222.

Public comments are invited, and may be filed with the Commission in either paper or electronic form. All comments should be filed as prescribed in the **ADDRESSES** section above, and must be received on or before the date specified in the **DATES** section.

Analysis of Agreement Containing Consent Order to Aid Public Comment

The Federal Trade Commission (''FTC'') has accepted, subject to final approval, an agreement containing a consent order from American Nationwide Mortgage Company, Inc. (''respondent'').

The proposed consent order has been placed on the public record for thirty (30) days for the receipt of comments by interested persons. Comments received during this period will become part of the public record. After thirty (30) days, the Commission will again review the agreement and the comments received, and will decide whether it should withdraw from the agreement or make final the agreement's proposed order.

The complaint alleges that respondent engaged in practices that violate Section 5(a) of the Federal Trade Commission Act, 15 U.S.C. § 45(a), Section 144 of the Truth in Lending Act (''TILA''), 15 U.S.C. § 1664, and Section 226.24 of Regulation Z, 12 C.F.R. § 226.24.

Section 5(a) of the FTC Act prohibits unfair or deceptive acts or practices. Respondent violated Section 5(a) of the FTC Act because it disseminated or has caused to be disseminated home loan advertisements which offer a low monthly payment amount and/or low rate, but fail to disclose, or fail to disclose adequately, that this monthly payment amount and/or low rate: (1) apply only for a limited period of time, after which they will increase; (2) do not include the amount of interest that the consumer owes each month; and (3) are less than the monthly payment amount (including interest) and/or the interest rate that the consumer owes, with the difference added to the total amount due from the consumer or total loan balance. This information would be material to consumers shopping for a mortgage loan and the failure to disclose, or failure to disclose adequately, this information is a deceptive practice. Respondent also violated Section 5(a) of the FTC Act because it misrepresented, expressly or by implication, that its advertised rate was a fixed rate for the full term of the loan.

TILA and Regulation Z require that closed-end credit advertisers who state a periodic payment amount must also provide additional information in the advertisement, including the terms of repayment; the annual percentage rate (''APR''); and if the APR may be increased after consummation, that fact. TILA and Regulation Z also require that if an advertisement states a rate of finance charge, it must state the rate as an APR. Currently, Regulation Z also requires that if the advertisement states a payment rate, it must include additional disclosures. Respondent's advertisements failed to disclose, or failed to disclose clearly and conspicuously, this information required by TILA and Regulation Z. Respondent's failure to disclose this information undermined consumers' ability to compare these offers to others in the marketplace. Through its law enforcement actions, the Commission intends to promote compliance with the disclosure requirements of TILA and Regulation Z, and to foster comparison shopping for mortgage loans.

The proposed consent order contains provisions designed to prevent respondent from violating the FTC Act or failing to make clear and conspicuous disclosures required by TILA and Regulation Z, as amended, *see* 73 Fed. Reg. 44,522 (July 30, 2008), and as may be further amended in the future.

Part I of the proposed order prohibits respondent, in connection with closed-end credit, from advertising a monthly payment amount unless respondent discloses, clearly and conspicuously and in close proximity to those representations, as applicable, that the advertised monthly payment amount: (1) applies only for a limited period of time, after which it will increase; (2) does not include the amount of interest that the consumer owes each month; and (3) is less than the monthly payment amount (including interest) that the consumer owes, with the difference added to the total amount due from the consumer or total loan balance.

Part II of the proposed order prohibits respondent, in connection with closed-end credit, from advertising a rate lower than the rate at which interest is accruing, regardless of whether the rate is referred to as an ''effective rate,'' a ''payment rate,'' a ''qualifying rate,'' or any other term, provided that this provision does not prohibit advertisement of the ''annual percentage rate'' or ''APR.'' In light of respondent's deceptive use of payment rates in its advertisements, and the Federal Reserve Board's amendments to Regulation Z banning the use of such rates effective October 1, 2009, the proposed order prohibits respondent from advertising any such rate, to ensure that respondent's advertisements do not deceive consumers. S*ee* 73 Fed. Reg. at 44,608.

Part III of the proposed order prohibits respondent, in connection with closed-end credit, from misrepresenting the nature and/or extent of the variability of any loan rate or payment amount, including but not limited to (1) an interest rate or APR; (2) whether it is fixed rather than adjustable or adjustable rather than fixed; and (3) for an interest rate or payment amount, the duration, or reasonably anticipated duration, of the fixed or variable interest rate or payment amount.

Part IV of the proposed order prohibits respondent, in connection with closed-end credit, from advertising the amount of any payment, the number of payments or the period of repayment, or the amount of any finance charge,

without disclosing, clearly and conspicuously, all of the terms required by TILA and Regulation Z, including the terms of repayment; the APR; and if the APR may be increased after consummation, that fact.

Part V of the proposed order prohibits respondent, in connection with closed-end credit, from stating a rate of finance charge without stating the rate as an APR, as required by TILA and Regulation Z.

Part VI of the proposed order prohibits respondent from failing to comply in any respect with TILA or Regulation Z.

Part VII of the proposed order contains a document retention requirement, the purpose of which is to ensure compliance with the proposed order. It requires that respondent maintain all records that will demonstrate compliance with the proposed order.

Part VIII of the proposed order requires respondent to distribute copies of the order to various principals, officers, directors, and managers, and all current and future employees, agents and representatives having responsibilities with respect to the subject matter of the order.

Part IX of the proposed order requires respondent to notify the Commission of any changes in its corporate structure that might affect compliance with this order.

Part X of the proposed order requires respondent to file with the Commission one or more reports detailing compliance with the order.

Part XI of the proposed order is a ''sunset'' provision, dictating the conditions under which the order will terminate twenty years from the date it is issued or twenty years after a complaint is filed in federal court, by either the United States or the FTC, alleging any violations of the order.

The purpose of this analysis is to facilitate public comment on the proposed order, and it is not intended to constitute an official interpretation of the agreement and proposed order or to modify in any way their terms.

By direction of the Commission.

Donald S. Clark,

Secretary.

[FR Doc. E9–840 Filed 1–14–09: 8:45 am]

BILLING CODE 6750–01–S

FEDERAL TRADE COMMISSION

[File No. 082 3034]

Michael Gendrolis dba Good Life Funding.; Analysis of Proposed Consent Order to Aid Public Comment

AGENCY: Federal Trade Commission.

ACTION: Proposed Consent Agreement.

SUMMARY: The consent agreement in this matter settles alleged violations of federal law prohibiting unfair or deceptive acts or practices or unfair methods of competition. The attached Analysis to Aid Public Comment describes both the allegations in the draft complaint and the terms of the consent order—embodied in the consent agreement—that would settle these allegations.

DATES: Comments must be received on or before February 9, 2009.

ADDRESSES: Interested parties are invited to submit written comments. Comments should refer to ''Good Life Funding, File No. 082 3034,'' to facilitate the organization of comments. A comment filed in paper form should include this reference both in the text and on the envelope, and should be mailed or delivered to the following address: Federal Trade Commission/ Office of the Secretary, Room 135-H, 600 Pennsylvania Avenue, N.W., Washington, D.C. 20580. Comments containing confidential material must be filed in paper form, must be clearly labeled ''Confidential,'' and must comply with Commission Rule 4.9(c). 16 CFR 4.9(c) (2005).[1] The FTC is requesting that any comment filed in paper form be sent by courier or overnight service, if possible, because U.S. postal mail in the Washington area and at the Commission is subject to delay due to heightened security precautions. Comments that do not contain any nonpublic information may instead be filed in electronic form by following the instructions on the web-based form at (*http://secure.commentworks.com/ftc-GoodLifeFunding*). To ensure that the Commission consider an electronic comment, you must file it on that web-based form.

The FTC Act and other laws the Commission administers permit the collection of public comments to consider and use in this proceeding as appropriate. All timely and responsive public comments, whether filed in paper or electronic form, will be considered by the Commission, and will be available to the public on the FTC website, to the extent practicable, at *www.ftc.gov.* As a matter of discretion, the FTC makes every effort to remove home contact information for individuals from the public comments it receives before placing those comments on the FTC website. More information, including routine uses permitted by the Privacy Act, may be found in the FTC's privacy policy, at (*http://www.ftc.gov/ftc/privacy.shtm*).

FOR FURTHER INFORMATION CONTACT: Carole Reynolds, Bureau of Consumer Protection, 600 Pennsylvania Avenue, NW, Washington, D.C. 20580, (202) 326-3230.

SUPPLEMENTARY INFORMATION: Pursuant to section 6(f) of the Federal Trade Commission Act, 38 Stat. 721, 15 U.S.C. 46(f), and § 2.34 of the Commission Rules of Practice, 16 CFR 2.34, notice is hereby given that the above-captioned consent agreement containing a consent order to cease and desist, having been filed with and accepted, subject to final approval, by the Commission, has been placed on the public record for a period of thirty (30) days. The following Analysis to Aid Public Comment describes the terms of the consent agreement, and the allegations in the complaint. An electronic copy of the full text of the consent agreement package can be obtained from the FTC Home Page (for January 8, 2009), on the World Wide Web, at (*http://www.ftc.gov/os/2009/01/index.htm*). A paper copy can be obtained from the FTC Public Reference Room, Room 130-H, 600 Pennsylvania Avenue, NW, Washington, D.C. 20580, either in person or by calling (202) 326-2222.

Public comments are invited, and may be filed with the Commission in either paper or electronic form. All comments should be filed as prescribed in the **ADDRESSES** section above, and must be received on or before the date specified in the **DATES** section.

Analysis of Agreement Containing Consent Order to Aid Public Comment

The Federal Trade Commission (''FTC'') has accepted, subject to final approval, an agreement containing a consent order from Michael Gendrolis dba Good Life Funding (''respondent'').

The proposed consent order has been placed on the public record for thirty (30) days for the receipt of comments by interested persons. Comments received during this period will become part of

[1] The comment must be accompanied by an explicit request for confidential treatment, including the factual and legal basis for the request, and must identify the specific portions of the comment to be withheld from the public record. The request will be granted or denied by the Commission's General Counsel, consistent with applicable law and the public interest. *See* Commission Rule 4.9(c), 16 CFR 4.9(c).

the public record. After thirty (30) days, the Commission will again review the agreement and the comments received, and will decide whether it should withdraw from the agreement or make final the agreement's proposed order.

The complaint alleges that respondent engaged in practices that violate Section 5(a) of the Federal Trade Commission Act, 15 U.S.C. § 45(a), Section 144 of the Truth in Lending Act (''TILA''), 15 U.S.C. § 1664, and Section 226.24 of Regulation Z, 12 C.F.R. § 226.24.

Section 5(a) of the FTC Act prohibits unfair or deceptive acts or practices. Respondent violated Section 5(a) of the FTC Act, because it disseminated or has caused to be disseminated home loan advertisements which offer a low monthly payment amount and/or payment rate, but fail to disclose, or fail to disclose adequately, that this monthly payment amount and/or payment rate: (1) apply only for a limited period of time, after which they will increase; (2) do not include the amount of interest that the consumer owes each month; and (3) are less than the monthly payment amount (including interest) and/or the interest rate that the consumer owes, with the difference added to the total amount due from the consumer or total loan balance. This information would be material to consumers shopping for a mortgage loan and the failure to disclose, or failure to disclose adequately, this information is a deceptive practice.

TILA and Regulation Z require that closed-end credit advertisers who state a periodic payment amount must also provide additional information in the advertisement, including the terms of repayment; the annual percentage rate (''APR''); and if the APR may be increased after consummation, that fact. TILA and Regulation Z also require that if an advertisement states a rate of finance charge it must state the rate as an APR. Currently, Regulation Z also requires that if the advertisement states a payment rate, it must include additional disclosures. Respondent's advertisements failed to disclose, or failed to disclose clearly and conspicuously, this information required by TILA and Regulation Z. Respondent's failure to disclose this information undermined consumers' ability to compare these offers to others in the marketplace. Through its law enforcement actions, the Commission intends to promote compliance with the disclosure requirements of TILA and Regulation Z, and to foster comparison shopping for mortgage loans.

The proposed consent order contains provisions designed to prevent respondent from violating the FTC Act or failing to make clear and conspicuous disclosures required by TILA and Regulation Z, as has been amended, *see* 73 Fed. Reg. 44,522 (July 30, 2008), and as may be further amended in the future.

Part I of the proposed order prohibits respondent, in connection with closed-end credit, from advertising a monthly payment amount unless respondent discloses, clearly and conspicuously and in close proximity to those representations, as applicable, that the advertised monthly payment amount: (1) applies only for a limited period of time, after which it will increase; (2) does not include the amount of interest that the consumer owes each month; and (3) is less than the monthly payment amount (including interest) that the consumer owes, with the difference added to the total amount due from the consumer or total loan balance.

Part II of the proposed order prohibits respondent, in connection with closed-end credit, from advertising a rate lower than the rate at which interest is accruing, regardless of whether the rate is referred to as an ''effective rate,'' a ''payment rate,'' a ''qualifying rate,'' or any other term, provided that this provision does not prohibit advertisement of the ''annual percentage rate'' or ''APR.'' In light of respondent's deceptive use of payment rates in its advertisements, and the Federal Reserve Board's amendments to Regulation Z banning the use of such rates effective October 1, 2009, the proposed order prohibits respondent from advertising any such rate, to ensure that respondent's advertisements do not deceive consumers. S*ee* 73 Fed. Reg. at 44,608.

Part III of the proposed order prohibits respondent, in connection with consumer credit, from making representations about the consumer's current lender unless respondent adequately discloses respondent's name and identity as the entity offering the loan.

Part IV of the proposed order prohibits respondent, in connection with closed-end credit, from advertising the amount of any payment, the number of payments or the period of repayment, or the amount of any finance charge, without disclosing, clearly and conspicuously, all of the terms required by TILA and Regulation Z, including the terms of repayment; the APR; and if the APR may be increased after consummation, that fact.

Part V of the proposed order prohibits respondent, in connection with closed-end credit, from stating a rate of finance charge without stating the rate as an APR, as required by TILA and Regulation Z.

Part VI of the proposed order prohibits respondent from failing to comply in any respect with TILA or Regulation Z.

Part VII of the proposed order contains a document retention requirement, the purpose of which is to ensure compliance with the proposed order. It requires that respondent maintain all records that will demonstrate compliance with the proposed order.

Part VIII of the proposed order requires respondent to distribute copies of the order to various principals, officers, directors, and managers, and all current and future employees, agents and representatives having responsibilities with respect to the subject matter of the order.

Part IX of the proposed order requires respondent to notify the Commission of any changes in its corporate structure that might affect compliance with this order.

Part X of the proposed order requires respondent to file with the Commission one or more reports detailing compliance with the order.

Part XI of the proposed order is a ''sunset'' provision, dictating the conditions under which the order will terminate twenty years from the date it is issued or twenty years after a complaint is filed in federal court, by either the United States or the FTC, alleging any violations of the order.

The purpose of this analysis is to facilitate public comment on the proposed order, and it is not intended to constitute an official interpretation of the agreement and proposed order or to modify in any way their terms.

By direction of the Commission.

Donald S. Clark,

Secretary.

[FR Doc. E9–838 Filed 1–14–09: 8:45 am]

BILLING CODE 6750–01–S

DEPARTMENT OF HEALTH AND HUMAN SERVICES

Notice of Availability of Request for Information (RFI) Regarding the Potential Roles for HHS in Developing a Dynamic Environment To Encourage the Innovation and Diffusion of Medical Technologies That Enhance Health System Value

AGENCY: Office of the Assistant Secretary for Planning and Evaluation, Department of Health and Human Services.

ACTION: Request for information.

SUMMARY: The Department of Health and Human Services (HHS) is soliciting ideas and information relating to ways in which HHS could continue to improve its use of resources and authorities in encouraging the development and use of new medical technologies, consistent with the goals of (a) maintaining and improving the quality of care, (b) controlling overall healthcare costs, and (c) using timely and practical administrative procedures. This Request for Information is now available on the HHS Web site at *http://aspe.hhs.gov/sp/medtechinnovation/rfi*.

DATES: Responses should be submitted to the U.S. Department of Health and Human Services on or before 5 p.m., EDT, April 16, 2009.

ADDRESSES:

Instructions for Submitting Comments: Electronic responses are preferred and should be addressed to *medtechinnovation@hhs.gov*. Written responses should be addressed to the U.S. Department of Health and Human Services, Room 434E, 200 Independence Ave, SW., Washington, DC 20201. Attention: Medical Technology Innovation RFI. A copy of this RFI is available on the Web site of the Assistant Secretary for Planning and Evaluation at *http://aspe.hhs.gov/sp/medtechinnovation/rfi*.

The submission of comments in response to this notice should not exceed 25 pages, not including appendices and supplemental documents. Any information you submit will be made public. Consequently, please do not send any proprietary, commercial, financial, business confidential, trade secret, or personal information that you do not wish to be made public.

Public Access: Responses to this RFI will be available to the public in the Policy Information Center, 200 Independence Avenue, SW., Washington, DC, 20201. Please call (202) 690–6445 between 9 a.m. and 5 p.m. to arrange access.

FOR FURTHER INFORMATION CONTACT: Medical Technology Innovation Desk, Office of the Assistant Secretary for Planning and Evaluation, (202) 690–7858.

Dated: January 12, 2009.

Mary M. McGeein,

Principal Deputy Assistant Secretary for Planning and Evaluation.

[FR Doc. E9–807 Filed 1–14–09; 8:45 am]

BILLING CODE 4151–05–P

DEPARTMENT OF HEALTH AND HUMAN SERVICES

Agency for Healthcare Research and Quality

Agency Information Collection Activities: Proposed Collection; Comment Request

AGENCY: Agency for Healthcare Research and Quality, HHS.

ACTION: Notice.

SUMMARY: This notice announces the intention of the Agency for Healthcare Research and Quality (AHRQ) to request that the Office of Management and Budget (OMB) approve the proposed information collection project: ''Improving Patient Flow and Reducing Emergency Department Crowding.'' In accordance with the Paperwork Reduction Act of 1995, 44 U.S.C. 3506(c)(2)(A), AHRQ invites the public to comment on this proposed information collection.

DATES: Comments on this notice must be received by March 16, 2009.

ADDRESSES: Written comments should be submitted to: Doris Lefkowitz, Reports Clearance Officer, AHRQ, by e-mail at *doris.lefkowitz@ahrq.hhs.gov.* Copies of the proposed collection plans, data collection instruments, and specific details on the estimated burden can be obtained from the AHRQ Reports Clearance Officer.

FOR FURTHER INFORMATION CONTACT: Doris Lefkowitz, AHRQ Reports Clearance Officer, (301) 427–1477, or by e-mail at *doris.lefkowitz@ahrq.hhs.gov.*

SUPPLEMENTARY INFORMATION:

Proposed Project

''Improving Patient Flow and Reducing Emergency Department Crowding''

AHRQ proposes to study implementation of strategies from the Urgent Matters (UM) Toolkit for improving patient flow in emergency departments (ED). UM, a Robert Wood Johnson Foundation (RWJF) funded initiative, began as a collaborative of 10 urban, safety net hospitals that experimented with a variety of strategies (now included in the ''UM Toolkit'') designed to relieve ED crowding. The first phase of this initiative demonstrated that reductions in ED crowding were achievable without investment of significant financial resources. However, implementation of these strategies has not been widespread, and questions remain about how readily the strategies could be implemented in a more diverse group of hospitals, and the associated costs and outcomes of implementation. This study is funded by a grant from RWJF to AHRQ.

Six diverse hospitals have been selected for this study of the implementation of strategies from the UM Toolkit for improving ED patient flow. This study poses a common outcome goal across all six sites of improving patient flow and reducing ED crowding, but requires each hospital to select strategies that fit its own needs amid context. This approach rests on innovation research showing that organizational innovations are more successful when they are aligned with features of the adopting hospital. Participating hospitals will select strategies from the UM Toolkit that they believe will work best to address the particular problems they face. The six hospitals have agreed to participate in a collaborative run by the UM National Program Office (NPO) over the course of this study to facilitate the sharing of data and experiences while the project is under way.

This study will document the experiences of a diverse set of hospital EDs as they identify and implement ED patient flow improvement strategies. The six case study hospitals were selected to reflect diversity of size, ownership, teaching status, safety net status, and types of challenges with ED crowding.

Research methods will include observational site visits, in-person and telephone interviews, and the analysis of cost data. AHRQ's contractor for this study, Health Research & Educational Trust (HRET), will perform analysis of secondary data on ED performance measures; this secondary data will be provided to HRET by the Urgent Matters NPO. These qualitative and quantitative methods will be used to:

- Study the processes through which hospitals decide upon and adopt patient flow improvement strategies;
- Identify facilitators and barriers to the implementation and maintenance of these strategies;
- Document changes in patient flow, patient satisfaction, and staff satisfaction associated with the implementation of strategies and processes;
- Generate estimates of the costs of adopting the strategies;
- Identify issues associated with the reporting of ED performance measures, and
- Develop lessons for hospitals considering the adoption of patient flow improvement strategies.

The study will not be used to answer questions about causality or degrees of effectiveness (e.g to what degree did a

given intervention cause an improvement in patient flow?). Rather, the study seeks to enhance understanding of factors affecting decision-making and adoption processes that facilitate or hinder implementation. Insights and lessons learned about organizational, technical and resource challenges arising from these improvement activities may be of interest or benefit to others seeking to identify and adopt strategies to address similar problems in their EDs.

This study is being conducted pursuant to AHRQ's statutory authority to conduct and support research on health care and on systems for the delivery of such care, including activities with respect to: The quality, effectiveness, efficiency, appropriateness and value of health care services; quality measurement and improvement; and health care costs, productivity, organization, and market forces. 42 U.S.C. 299a(a)(1), (2), and (6).

Method of Collection

AHRQ seeks approval for the following data collection activities:

- In-person interviews will be conducted within two months of the implementation with up to 12 individuals at each of the 6 sites during two-day site visits to each of the hospitals.
- Telephone interviews will be conducted approximately 6 months after implementation with 12 individuals from each of the six hospitals (most or all of whom will be the same individuals interviewed in person).
- Each of the six hospitals will submit information on the costs associated with the planning, implementation, and maintenance of the patient flow improvement strategies on a monthly basis. One study team member at each site will record costs on an assessment instrument specifically designed for this purpose and tailored to each hospital's own organizational structure and patient flow strategies.

This assessment instrument will collect information on staff time devoted to the patient flow improvement initiatives as well as the costs of items or resources purchased to support the initiatives.

Estimated Annual Respondent Burden

Exhibit 1 shows the estimated annualized burden hours for the hospitalst time to participate in this study. In-person interviews will be conducted within two months of implementation with 12 administrative and clinical personnel from each of the six participating hospitals and will require about one hour. Telephone interviews will be conducted approximately six months thereafter with 12 individuals (administrative and clinical) from each hospital and will take about 45 minutes. Monthly cost assessment data will be collected from each participating hospital each month and will require about one hour. The total estimated burden for participation in this study is 198 hours.

Exhibit 2 shows the estimated annualized cost burden for the respondents' time to provide the requested data. The total cost burden is approximately $6,536.

EXHIBIT 1—ESTIMATED ANNUALIZED BURDEN HOURS

Data collection	Number of respondents	Number of responses per respondent	Hours per response	Total burden hours
In-person interviews	6	12	1	72
Telephone interviews	6	12	45/60	54
Cost Assessment	6	12	1	72
Total	18	na	na	198

EXHIBIT 2—ESTIMATED ANNUALIZED COST BURDEN

Data collection	Number of respondents	Total burden hours	Average hourly wage rate*	Total cost burden
In-person interviews	6	72	$35.07	$2,525
Telephone interviews	6	54	35.07	1,984
Cost Assessment	6	72	28.15	2,027
Total	18	198	na	6,536

*For the interviews, the hourly rate of $35.07 is an average of the administrative personnel hourly wage of $14.53, the physician rate of $62.52, and the registered nurse rate of $28.15. For cost assessment, the hourly rate of $28.15 is the hourly rate for registered nurses. National Compensation Survey: Occupational Wages in the United States 2005, U.S. Department of Labor, Bureau of Labor Statistics.

Estimated Annual Costs to the Federal Government

Exhibit 3 shows the total and annualized cost to the government for this eighteen-month study.

EXHIBIT 3—ESTIMATED COST

Cost component	Total cost	Annualized cost
Project Development	$52,446	$34,964
Data Collection Activities	90,298	60,199

EXHIBIT 3—ESTIMATED COST—Continued

Cost component	Total cost	Annualized cost
Data Processing and Analysis	70,569	47,046
Publication of Results	41,420	27,613
Project Management	68,908	45,939
Overhead	76,320	50,880
Total	399,961	266,641

Request for Comments

In accordance with the above-cited Paperwork Reduction Act legislation, comments on AHRQ's information collection are requested with regard to any of the following: (a) Whether the proposed collection of information is necessary for the proper performance of AHRQ's health care research and health care information dissemination functions, including whether the information will have practical utility; (b) the accuracy of AHRQ's estimate of burden (including hours and costs) of the proposed collection(s) of information; (c) ways to enhance the quality, utility, and clarity of the information to be collected; and (d) ways to minimize the burden of the collection of information upon the respondents, including the use of automated collection techniques or other forms of information technology.

Comments submitted in response to this notice will be summarized and included in the Agency's subsequent request for OMB approval of the proposed information collection. All comments will become a matter of public record.

Dated: December 30, 2008.

Carolyn M. Clancy,

Director.

[FR Doc. E9–537 Filed 1–14–09; 8:45 am]

BILLING CODE 4160–90–M

DEPARTMENT OF HEALTH AND HUMAN SERVICES

Food and Drug Administration

[Docket No. FDA–2008–N–0543]

Agency Information Collection Activities; Submission for Office of Management and Budget Review; Comment Request; Waiver of In Vivo Demonstration of Bioequivalence of Animal Drugs in Soluble Powder Oral Dosage Form Products and Type A Medicated Articles

AGENCY: Food and Drug Administration, HHS.

ACTION: Notice.

SUMMARY: The Food and Drug Administration (FDA) is announcing that a proposed collection of information has been submitted to the Office of Management and Budget (OMB) for review and clearance under the Paperwork Reduction Act of 1995.

DATES: Fax written comments on the collection of information by February 17, 2009.

ADDRESSES: To ensure that comments on the information collection are received, OMB recommends that written comments be faxed to the Office of Information and Regulatory Affairs, OMB, Attn: FDA Desk Officer, FAX: 202–395–6974, or e-mailed to *oira_submissions@OMB.eop.gov*. All comments should be identified with the OMB control number 0910–0575. Also include the FDA docket number found in brackets in the heading of this document.

FOR FURTHER INFORMATION CONTACT: Denver Presley, Jr.,Office of Information Management (HFA–710), Food and Drug Administration, 5600 Fishers Lane, Rockville, MD 20857, 301–796–3793.

SUPPLEMENTARY INFORMATION: In compliance with 44 U.S.C. 3507, FDA has submitted the following proposed collection of information to OMB for review and clearance.

Waiver of In Vivo Demonstration of Bioequivalence of Animal Drugs in Soluble Powder Oral Dosage Form Products and Type A Medicated Articles—21 CFR Part 514 (OMB Control Number 0910–0575)—Extension

The Center for Veterinary Medicine has written this guidance to address a perceived need for agency guidance in its work with the animal health industry. This guidance describes the procedures that the agency recommends for the review of requests for waiver of in vivo demonstration of bioequivalence for generic soluble powder oral dosage form products and Type A medicated articles.

The Generic Animal Drug and Patent Term Registration Act of 1988 permitted the generic drug manufacturers to copy those pioneer drug products that were no longer subject to patent or other marketing exclusivity protection. The approval for marketing these generic products is based, in part, upon a demonstration of bioequivalence between the generic product and the pioneer product. This guidance clarifies circumstances under which FDA believes the demonstration of bioequivalence required by the statute does not need to be established on the basis of in vivo studies for soluble powder oral dosage form products and Type A medicated articles. The data submitted in support of the waiver request are necessary to validate the waiver decision.

The requirement to establish bioequivalence through in vivo studies (blood level bioequivalence or clinical endpoint bioequivalence) may be waived for soluble powder oral dosage form products or Type A medicated articles in either of two alternative ways. A biowaiver may be granted if it can be shown that the generic soluble powder oral dosage form product or Type A medicated article contains the same active and inactive ingredient(s) and is produced using the same manufacturing processes as the approved comparator product or article. Alternatively, a biowaiver may be granted without direct comparison to the pioneer product's formulation and manufacturing process if it can be shown that the active pharmaceutical ingredient(s) (API) is the same as the pioneer product, is soluble, and that there are no ingredients in the formulation likely to cause adverse pharmacologic effects. For the purpose of evaluating soluble powder oral dosage form products and Type A medicated articles, solubility can be demonstrated in one of two ways: (1) ''USP definition'' approach or (2) ''Dosage adjusted'' approach.

In the **Federal Register** of October 29, 2008 (73 FR 64338), FDA published a 60-day notice requesting public comment on the information collection provisions. No comments were received.

FDA estimates the burden of this collection of information as follows:

TABLE 1.—ESTIMATED ANNUAL REPORTING BURDEN FOR WATER SOLUBLE POWDERS[1]

	No. of Respondents	Annual Frequency per Response	Total Annual Responses	Hours per Response	Total Hours
Same formulation/manufacturing process approach	1	1	1	5	5
Same API/solubility approach	5	5	5	10	50
Total burden hours					55

[1] There are no capital costs or operating and maintenance costs associated with this collection of information.

TABLE 2.—ESTIMATED ANNUAL REPORTING BURDEN FOR TYPE A MEDICATED ARTICLES[1]

	No. of Respondents	Annual Frequency of Responses	Total Annual Responses	Hours per Response	Total Hours
Same formulation/manufacturing process approach	2	2	2	5	10
Same API/solubility approach	10	10	10	20	200
Total burden hours					210

[1] There are no capital costs or operating and maintenance costs associated with this collection of information.

The sources of the previous data are records of generic drug applications over the past 10 years.

Dated: January 8, 2009.

Jeffrey Shuren,

Associate Commissioner for Policy and Planning.

[FR Doc. E9–782 Filed 1–14–09; 8:45 am]

BILLING CODE 4160–01–S

DEPARTMENT OF HEALTH AND HUMAN SERVICES

Food and Drug Administration

[Docket No. FDA–2007–D–0202] (formerly Docket No. 2007D–0106)

Guidance for Clinical Investigators, Sponsors, and Institutional Review Boards on Adverse Event Reporting—Improving Human Subject Protection; Availability

AGENCY: Food and Drug Administration, HHS.

ACTION: Notice.

SUMMARY: The Food and Drug Administration (FDA) is announcing the availability of a guidance for industry entitled ''Adverse Event Reporting—Improving Human Subject Protection.'' This guidance is intended to assist the research community in interpreting requirements for submitting reports of unanticipated problems, including certain adverse events reports, to institutional review boards (IRBs). FDA developed this guidance in response to concerns raised by the IRB community that increasingly large volumes of individual, unanalyzed adverse event reports are inhibiting, rather than enhancing, the ability of IRBs to adequately protect human subjects. The guidance provides recommendations to IRBs, sponsors, and investigators on improving the usefulness of the adverse event information submitted to IRBs. Elsewhere in this issue of the **Federal Register**, FDA is issuing the final rule entitled ''Institutional Review Boards; Registration Requirements.''

DATES: Submit written or electronic comments on agency guidances at any time.

ADDRESSES: Submit written requests for single copies of the guidance to the Division of Drug Information, Center for Drug Evaluation and Research, Food and Drug Administration, 10903 New Hampshire Ave., Bldg. 51, rm. 2201, Silver Spring, MD 20993–0002. Send one self-addressed adhesive label to assist that office in processing your requests. Submit written comments on the guidance to the Division of Dockets Management (HFA–305), Food and Drug Administration, 5630 Fishers Lane, rm. 1061, Rockville, MD 20852. Submit electronic comments to *http://www.regulations.gov*. See the **SUPPLEMENTARY INFORMATION** section for electronic access to the guidance document.

FOR FURTHER INFORMATION CONTACT: Joseph Griffin, Center for Drug Evaluation and Research, Food and Drug Administration, 10903 New Hampshire Ave., Silver Spring, MD 20993, 301–796–2270, e-mail: *Joseph.Griffin@fda.hhs.gov*.

SUPPLEMENTARY INFORMATION:

I. Background

FDA is announcing the availability of a guidance for clinical investigators, sponsors, and IRBs entitled ''Adverse Event Reporting—Improving Human Subject Protection.'' Under the regulations in 21 CFR part 50 (Protection of Human Subjects), part 56 (21 CFR part 56) (Institutional Review Boards), part 312 (21 CFR part 312) (Investigational New Drug Application), and part 812 (21 CFR part 812) (Investigational Device Exemptions), an IRB must review and approve a clinical study before the study is initiated. Additionally, after an IRB's initial review and approval, an IRB must conduct continuing review of the study at intervals appropriate to the degree of risk presented by the study, at least annually. The primary purpose of both the initial review of a study and the periodic review of the conduct of the study is to ensure the protection of the rights and welfare of human subjects. To do its job, an IRB must be informed of any unanticipated problems in the study and any changes in the research activity. This guidance discusses adverse event reporting to IRBs by sponsors and investigators and emphasizes the value of well-analyzed adverse event data to an IRB review.

A notice announcing the draft version of this guidance published in the **Federal Register** on April 9, 2007 (72 FR 17562). After carefully considering all received comments, the agency is finalizing that guidance. The draft and the final have relatively minor substantive differences. The recommendations section in the final

guidance is streamlined and re-organized to make the information clearer and more accessible, but there are no major policy differences. The final guidance also omits much of the background discussion about the origin and nature of the adverse event reporting problem that the guidance addresses because that information is tangential to the goals of the guidance.

This guidance is being issued consistent with FDA's good guidance practices regulation (21 CFR 10.115). The guidance represents the agency's current thinking on adverse event reporting for the purpose of improving human subject protection. It does not create or confer any rights for or on any person and does not operate to bind FDA or the public. An alternative approach may be used if such approach satisfies the requirements of the applicable statutes and regulations.

II. The Paperwork Reduction Act of 1995

This guidance refers to previously approved collections of information found in FDA regulations. These collections of information are subject to review by the Office of Management and Budget (OMB) under the Paperwork Reduction Act of 1995 (44 U.S.C. 3501–3520). The collections of information in part 56 have been approved under OMB control number 0910–0130; the collections of information in part 312 have been approved under OMB control number 0910–0014; and the collections of information in part 812 have been approved under OMB control number 0910–0078.

Interested persons may submit to the Division of Dockets Management (see **ADDRESSES**) written or electronic comments regarding this document. Submit a single copy of electronic comments or two paper copies of any mailed comments, except that individuals may submit one paper copy. Comments are to be identified with the docket number found in brackets in the heading of this document. Received comments may be seen in the Division of Dockets Management between 9 a.m. and 4 p.m., Monday through Friday.

Please note that on January 15, 2008, the FDA Division of Dockets Management Web site transitioned to the Federal Dockets Management System (FDMS). FDMS is a Government-wide, electronic docket management system. Electronic comments or submissions will be accepted by FDA only through FDMS at *http://www.regulations.gov*.

Dated: December 22, 2008.

Jeffrey Shuren,

Associate Commissioner for Policy and Planning.

[FR Doc. E9–683 Filed 1–14–09; 8:45 am]

BILLING CODE 4160–01–S

DEPARTMENT OF HEALTH AND HUMAN SERVICES

Food and Drug Administration

[Docket No. FDA–2004–D–0043] (formerly Docket No. 2004D–0510)

Guidance for Industry: Referral Program from the Food and Drug Administration to the National Oceanic and Atmospheric Administration Seafood Inspection Program for the Certification of Fish and Fishery Products for Export to the European Union and the European Free Trade Association; Availability

AGENCY: Food and Drug Administration, HHS.

ACTION: Notice.

SUMMARY: The Food and Drug Administration (FDA) is announcing the availability of a guidance document entitled ''Guidance for Industry: Referral Program from the Food and Drug Administration to the National Oceanic and Atmospheric Administration Seafood Inspection Program for the Certification of Fish and Fishery Products for Export to the European Union and the European Free Trade Association.'' The guidance provides information for seafood processors and other entities that are interested in obtaining export certificates for fish or fishery products that are to be shipped to the European Union (EU) and the European Free Trade Association (EFTA). FDA is also announcing that it intends to stop issuing EU Export Certificates after February 17, 2009.

DATES: Submit written or electronic comments on the guidance at any time.

ADDRESSES: Submit written comments concerning the guidance to the Division of Dockets Management (HFA–305), Food and Drug Administration, 5630 Fishers Lane, rm. 1061, Rockville, MD 20852. Submit electronic comments on the guidance to *http://www.regulations.gov*. Submit written requests for single copies of the guidance to the Office of Food Safety (HFS–300), Center for Food Safety and Applied Nutrition, Food and Drug Administration, 5100 Paint Branch Pkwy., College Park, MD 20740–3835. Send one self-addressed adhesive label to assist that office in processing your request. See the **SUPPLEMENTARY INFORMATION** section for electronic access to the guidance.

FOR FURTHER INFORMATION CONTACT: William Jones, Center for Food Safety and Applied Nutrition (HFS–325), Food and Drug Administration, 5100 Paint Branch Pkwy., College Park, MD 20740–3835, 301–436–2300.

SUPPLEMENTARY INFORMATION:

I. Background

In the **Federal Register** of November 26, 2004 (69 FR 68948) (the November 26 notice), FDA announced the availability of a draft guidance entitled ''Proposed Referral Program from the Food and Drug Administration to the National Oceanic and Atmospheric Administration Seafood Inspection Program for the Certification of Live and Perishable Fish and Fishery Products for Export to the European Union and the European Free Trade Association.'' In the November 26 notice, FDA announced that it proposed to operate a Referral Program for a 24-month period to test the viability and effectiveness of such an arrangement. During this period, EU Export Certificates for shipments of live and perishable fish and fishery products destined for the EU, European Union Accession Partnership Countries (EUAPC), and EFTA Members would have been issued by the National Oceanic and Atmospheric Administration Seafood Inspection Program (NOAA SIP) under the Agricultural Marketing Act. In addition, FDA indicated that it intended to stop issuing EU Export Certificates for live and perishable fish and fishery products during this period. FDA sought comment on this referral program, including whether it should be expanded beyond live and perishable to all shipments of fish and fishery products destined for the EU, EU Accession Partnership Countries, and other countries with certificate requirements.

Interested persons were initially given until December 27, 2004, to comment on the draft guidance. The comment period was subsequently extended until January 25, 2005 (69 FR 78038, December 29, 2004). The agency considered and modified the guidance as appropriate.

The agency is announcing the availability of the final guidance document entitled ''Guidance for Industry: Referral Program from the Food and Drug Administration to the National Oceanic and Atmosphere Administration Seafood Inspection Program for the Certification of Fish and Fishery Products for the Export to the European Union and the European Free

Trade Association.'' In this final guidance, FDA is announcing that: (1) We intend to proceed with a Certification Referral Program to NOAA SIP, without a 24-month test period, (2) we intend to expand the program to include all fish and fishery products for export to the EU and EFTA, and (3) we intend to stop issuing EU Export Certificates effective February 17, 2009. The agency intends to adopt this approach because the industry's demand for EU Export Certificates continues to rise dramatically, and FDA can no longer justify the use of our limited food safety resources for issuance of EU Export Certificates. The implementation of this guidance should free up resources that the agency can allocate for higher priority public health activities that are intended to protect the U.S. consuming public, while still providing a mechanism for the industry to continue obtaining EU certification. Seafood processors and other entities involved in the exporting of seafood to the EU may obtain EU Export Certificates from the NOAA SIP.

FDA is issuing this guidance document as a level 1 guidance consistent with FDA's good guidance practices regulation (21 CFR 10.115). This guidance represents FDA's current thinking on this topic. It does not create or confer any rights for or on any person and does not operate to bind FDA, NOAA SIP, or the public. An alternative approach may be used if such approach satisfies the requirements of the applicable statutes and regulations.

II. Comments

Interested persons may submit to the Division of Dockets Management (see **ADDRESSES**) written or electronic comments regarding this document. Submit a single copy of electronic comments or two paper copies of any mailed comments, except that individuals may submit one paper copy. Comments are to be identified with the docket number found in brackets in the heading of this document. The guidance and received comments may be seen in the Division of Dockets Management between 9 a.m. and 4 p.m., Monday through Friday.

Please note that on January 15, 2008, the FDA Division of Dockets Management Web site transitioned to the Federal Dockets Management System (FDMS). FDMS is a Government-wide, electronic docket management system. Electronic comments or submissions will be accepted by FDA only through FDMS at *http://www.regulations.gov*.

III. Electronic Access

Persons with access to the Internet may obtain the guidance document at *http://www.cfsan.fda.gov/guidance.html*.

Dated: January 9, 2009.

Jeffrey Shuren,

Associate Commissioner for Policy and Planning.

[FR Doc. E9–785 Filed 1–14–09; 8:45 am]

BILLING CODE 4160–01–S

DEPARTMENT OF HEALTH AND HUMAN SERVICES

Food and Drug Administration

[Docket No. FDA–2008–N–0661]

Unique Device Identification System; Public Workshop; Request for Comments

AGENCY: Food and Drug Administration, HHS.

ACTION: Notice of public workshop; request for comments.

The Food and Drug Administration (FDA) is announcing a public workshop entitled: ''Unique Device Identification System.'' The purpose of the public workshop is to obtain information to help us better understand the issues involved in the establishment of a unique device identification system (UDI system) and request comments on this topic.

Dates and Time: The public workshop will be held on, February 12, 2009, from 9 a.m. to 5 p.m. See section V of this document for additional dates associated with registration and participation in the workshop.

Location: The public workshop will be held at the Marriott Gaithersburg Washingtonian Center, 9751 Washingtonian Blvd., Gaithersburg, MD 20878, 301–590–0044.

Contact Person: Jay Crowley, Food and Drug Administration, Center for Devices and Radiological Health (HFZ–500), 1350 Piccard Dr., Rockville, MD 20852, 240–276–2389, or Stephen Ripley, Food and Drug Administration, Center for Biologics Evaluation and Research (HFM–17), 1401 Rockville Pike, suite 200N, Rockville, MD 20852, 301–827–6210.

Registration: Register electronically at *http://www.fda.gov/cdrh/ocd/udi/index.html*by January 30, 2009. There is no registration fee for the public workshop. Early registration is recommended because seating is limited. Registration on the day of the public workshop will be provided on a space available basis beginning at 8 a.m.

If you need special accommodations due to a disability, please contact Jay Crowley (see *Contact Person*) by January 30, 2009.

Comments: Regardless of attendance at the public workshop, interested persons may submit written or electronic comments to the Division of Dockets Management (HFA–305), Food and Drug Administration, 5630 Fishers Lane, rm. 1061, Rockville, MD 20852. Submit electronic comments to *http://www.regulations.gov*. Submit a single copy of electronic comments or two paper copies of any mailed comments, except that individuals may submit one paper copy. Comments are to be identified with the docket number found in brackets in the heading of this document. The deadline for submitting comments regarding this public workshop is February 27, 2009. Received comments may be seen in the Division of Dockets Management between 9 a.m. and 4 p.m., Monday through Friday.

SUPPLEMENTARY INFORMATION:

I. Background

A. What Does Section 226 of the Food and Drug Administration Amendments Act of 2007 (FDAAA) Require?

On September 27, 2007, President George W. Bush signed into law FDAAA (Public Law 110–85). Section 226 of FDAAA amended the Federal Food, Drug, and Cosmetic Act (the act) by requiring the establishment of a UDI system. Specifically, section 226(a) of FDAAA created a new section 519(f) of the act (21 U.S.C. 360i(f)) stating that ''The Secretary shall promulgate regulations establishing a unique device identification system for medical devices requiring the label of devices to bear a unique identifier, unless the Secretary requires an alternative placement or provides an exception for a particular device or type of device. The unique identifier shall adequately identify the device through distribution and use, and may include information on the lot or serial number.''

A UDI system may provide for early detection of the warning signs of a defective device and facilitate device recalls (Ref. 1) and other possible benefits of a UDI system have been suggested.

B. Why Are We Holding a Public Workshop?

The enactment of section 519(f) of the act has raised many questions for our consideration. For example, the statute requires the UDI to go on the device's label, but it also allows for ''alternative placement'' and for exceptions. Thus,

what circumstances would justify alternative placement of the UDI, and which devices should receive an exception from a UDI requirement? Consequently, we are issuing this notice to announce that we will hold a public workshop to discuss and to invite comment on the questions set out in section II. B of this document.

II. Issues to Be Considered

A. Organization and Basic Instructions

We invite comments on the questions presented in this section. We intend to discuss these same questions at the public workshop. If you wish to comment in writing on a particular question, please identify the question that you are addressing before providing your response to the question. For example, your comment could take the following format:

''Question 1—[Quote the question].''

''Response—[Insert your response].''

You do not have to address each question. Additionally, for those questions pertaining to economic issues or the prevalence of a particular problem or action, please provide data and/or references so that we may understand the basis for your comment, figures, and any assumptions that you used.

As this workshop will only take place over the course of a single day, in order to most effectively use this time and obtain as much information from as many diffferent points of view as possible, the public workshop will be divided into sessions that focus on each of the main topic areas. Each session will begin with an invited presentation to describe the issue. This will be followed by a moderated question and comment session. Following this discussion, the moderator will open up the discussion to questions and comments on the topic from the audience. Though limited, at the end of the day there will be time for other presentations.

Because of the workshop's format, we will only have a short time for additional presentations. We encourage attendees to raise their issues and concerns during the discussion portion of the main topic areas. We also encourage persons and groups having similar interests to consolidate their information and present it through a single representative.

Additionally, through this public workshop, we hope to gain greater understanding of various automatic identification technologies. Therefore, we invite manufacturers and organizations that market or have in development automatic identification technologies, which could be used with medical devices, to display these technologies. Questions about whether your product or technology would fall within the scope of this vendor display should be directed to the contact persons listed at the beginning of this notice.

You may register to present at the public workshop or participate in the vendor display at *http://www.fda.gov/cdrh/ocd/udi/index.html*. Because of time constraints, vendors may register either to present at the public workshop or participate in the vendor display. You may not register for both. If you choose to participate in the vendor display, you will have the opportunity to share information about your products with FDA and other attendees when they visit your display.

B. Questions Pertaining to the UDI System

1. Which types of devices or particular devices should be subject to the requirements of a UDI system? Which types of devices or particular devices should be excepted?

Section 519(f) of the act states that the Secretary of Health and Human Services may provide ''an exception for a particular device or type of device.'' However, the statute does not specify any criteria for an exception, nor does it describe the scope of an exception.

a. Should all devices be subject to the requirements of a UDI system? Please explain your reasoning.

b. Are there types of devices or particular devices that should receive an exception from the requirements of a UDI system? If so, what types of devices or particular devices should receive an exception and why?

2. What are the characteristics or aspects necessary to uniquely identify a device?

Section 519(f) of the act states that the UDI ''shall adequately identify the device through distribution and use, and may include information on the lot or serial number.'' The statutory language does not describe the characteristics or features that make a device ''unique'' or that ''adequately identify the device through distribution and use.''

a. What characteristics are needed to uniquely identify a device?

b. What core attributes, elements, or characteristics of a device should constitute a minimum data set for a device identifier?

c. What changes to an attribute, element, or characteristic associated with the unique identification of a device change should result in a new UDI?

d. Should the UDI include a component that represents package size or packaging level?

e. To what extent would or should the list of unique device characteristics vary depending on the type of device?

3. What should be the UDI's components?

a. Could existing standards, such as the standards used by GS1, Health Industry Business Communications Council (HIBCC), or others be used as a model for the UDI system? What are the advantages and disadvantages of these existing organizations and standards?

b. Some identification systems currently in use employ a combination of a device identifier (meaning information that identifies the manufacturer, make, and/or model of the device) and a production identifier (meaning information that relates to the lot or serial number). What should the device ''identifier'' component of the UDI cover or contain?

c. With respect to the production identifier, we note that the statute says that the UDI may include information on the device's lot or serial number. When should lot or serial number information be required for a device? Are there particular devices for which serial numbers should be required? If yes, what particular devices should be labeled with a serial number? Please explain your reasoning.

d. How might we ensure that UDIs, regardless of the manufacturers or devices associated with those UDIs, are uniform or standardized in their structure or composition? For example, the NDC (National Drug Code) number is always 10 digits long and always presents the labeler code first, followed by the product code and then the package code. Should we limit the number of ways that the UDI can be created or the standards to be used?

e. How should the UDI be created to ensure that UDIs are unique?

4. Where should the UDI be placed? What should be the criteria for alternative placement of the UDI?

The statute requires the label of devices to bear a unique identifier, unless we require an ''alternative placement'' or provide an exception. Section 201(k) of the act defines ''label'' ''as a display of written, printed, or graphic matter upon the immediate container of any article; and a requirement made by or under authority of this act that any word, statement, or other information appear on the label shall not be considered to be complied with unless such word, statement, or other information also appears on the

outside container or wrapper, if any there be, of the retail package of such article, or is easily legible through the outside container or wrapper.''

a. Should we specify where on the label the UDI must appear? If so, where should the UDI appear on the label? Please explain your reasoning.

i. Should we allow the components of the UDI to be placed separately on the same package or on different levels of packaging? For example, if the UDI consists of a device identifier component and a production identifier component, should we allow the device identifier component of the UDI to be placed in one location and allow the production identifier component to be placed elsewhere on the label or on the device? Please explain your reasoning.

As another example, some devices are packaged individually and then packaged again in a larger container (such as a ''shelf pack''). We are aware that some manufacturers would prefer placing both the device identifier component of the UDI and the production identifier component of the UDI on the larger container and placing only the device identifier component of the UDI on the individual packages. Separating UDI components or allowing part (rather than all) of the UDI on package labels may provide for flexibility in product labeling, but also generate confusion as to which UDI to read or scan (if the UDI components are separated) or limit the usefulness of the UDI if a component of the UDI is not present.

ii. For barcodes (whether linear or two-dimensional (2D)), should we require the UDI to be expressed in a concatenated manner (whereby the components of the UDI are expressed on the same line adjacent to each other) or in a stacked manner (whereby one component of the UDI rests atop the other component)?

b. Are there devices where we should require the UDI to appear on the device itself (direct part marking)? For example, it might be beneficial to put the UDI on the device itself if the device is re-processed because this might help firms identify or record how many times a particular device has been reprocessed. Similarly, certain single use devices (SUDs) sometimes are reprocessed, so a UDI on the device itself could facilitate the mandatory and voluntary MedWatch reporting relating to such reprocessed devices or facilitate other activities (such as documenting sterilization reprocessing of SUDs and validation studies) associated with SUDs. Conversely, are there devices where the UDI cannot or should not go on the device itself? If so, please describe those devices and explain why the UDI cannot or should not go on the device.

c. If we allow for ''alternative placement'' of the UDI for some particular devices or types of devices, what should be the general criteria for requiring ''alternative placement'' of the UDI, e.g., such as on the device itself or other location that is not on the label?

d. What specific challenges or limitations exist regarding ''alternative placement?'' For example, placing a UDI in an automatic identification form on an implantable device may present issues as to whether the automatic identification technology affects the device's integrity or function. As another example, certain devices, such as software, may pose particular challenges for how to label with a UDI.

5. How should the UDI be presented?

We are aware of several automatic identification technologies in use, such as linear bar codes, 2D bar codes, and radio frequency identification. We also note that various FDA regulations and initiatives have required or recommended one or more automatic identification technologies (see 21 CFR 201.25 (bar code label requirement for human drug products); 21 CFR 610.67 (bar code label requirement for biological products); Ref. 2; and section 505D of the act (21 U.S.C. 355e) (regarding ''pharmaceutical security'' and specifying ''promising technologies'' such as RFID (radio-frequency identification), nanotechnology, encryption technologies, and other ''track-and-trace or authentication technologies'')). Therefore:

a. Should we require human-readable UDIs or automatic identification of UDIs or both? Are there devices where it would be sufficient to have human-readable UDIs alone? Please explain your reasoning. For example, devices used in a home care setting might not need an automatic identification UDI because the home might not be equipped to read the automatic identifier. Are there situations where we should require both human-readable and automatic identification UDIs? Please explain your reasoning.

b. Should we specify a particular type of automatic identification technology or should we allow the automatic identification technology to vary depending on the type of device? Should we identify automatic identification standards (as opposed to specific technologies) that can be used? Please explain your reasoning. Specifying a particular type of automatic identification technology would enable hospitals and other parties who might read or use a UDI to make specific investments in scanning or reading equipment, but the technology chosen might not be easily applied to all devices (if we require the UDI to be placed somewhere other than the label.) For this question, we are particularly interested in hearing from parties who might use UDIs as well as entities that may have already adopted or installed device identification systems.

c. Should we allow the use of different automatic identification technologies to express different parts of the UDI? For example, the device identifier component might be expressed in a linear bar code and the production identifier component might be expressed in a 2D bar code. Allowing the use of different technologies for different components of the UDI may enable manufacturers to make more efficient use of label space or space on the device itself, but it also could generate confusion as to which identifier to read or scan and could necessitate the purchase of several types of reading and scanning equipment.

d. Are there existing standards or systems we should consider in establishing the requirements for how the UDI must be presented? For example, we are aware of various standards organizations, such as GS1 and the HIBCC, that exist and have specific formats or specifications for automatic identifiers for products. Should we allow any or all of these standards to be used?

6. How should the UDI Database be developed and maintained?

For parties to benefit from UDI information, it would seem necessary for those parties to know, at a minimum, the UDIs that exist, the specific device associated with each UDI, and the information associated with each UDI. It might be efficient for one entity to collect the UDIs, associate those UDIs with specific devices, and make the information associated with those UDIs publicly available. However, it is also conceivable (but perhaps less efficient or more costly) that the information could rest with individual manufacturers themselves (rather than FDA) or with a third party or third parties. Consequently:

a. How and when should we require UDIs and associated information to be entered into a database? How frequently should we require changes to a UDI or to the information associated with or linked to a UDI to be reported?

b. Aside from information that is necessary to uniquely identify a device,

what other information (if any) should be part of a UDI system database or otherwise linked to the UDIs?

c. If variable data (such as a lot or serial number) is necessary to uniquely identify a device, should such data be included in a UDI system database?

C. Questions Pertaining to Possible Impacts of a UDI System

Many production situations that might be affected by UDI requirements are complex. In its basic form, a device identifier is a series of digits and/or letters associated with a specific device. At a minimum, a system can be thought of as the set of procedures that allow stakeholders to use an identifier. Through public consultation, however, FDA has found that there are many different views as to the purpose of a UDI system and different opinions about how to describe and implement a UDI system. Because of the diversity of affected devices and manufacturing processes, we expect that affected entities might comply with UDI requirements in a variety of ways. If you respond to the following questions about the costs and benefits of a UDI system, we encourage you to provide as much detail and context as possible. For example, if you identify exceptional costs related to incorporating a UDI in certain production lines, we need to understand the production process details. In addition, we specifically invite small businesses to provide information about a UDI's potential impact.

1. What is the magnitude of the problem to be addressed by the establishment of a UDI system?

Please describe and provide qualitative or quantitative evidence of the incidence of deaths, injuries and illnesses associated with medical devices. What role would a UDI system play in helping to reduce the incidence of such deaths, injuries, and illnesses and how might the structure of a UDI system facilitate this role?

2. Questions for manufacturers

a. *Current practices.* Describe your current practices for applying standards to medical devices, marking identifiers on medical device labeling and managing medical device identifier data. For example, how do you currently use classification standards such as UNSPSC (United Nations Standard Products Service Code), nomenclature standards such as GMDN (Global Medical Device Nomenclature), and identification standards such as GS1 or HIBCC? What percent of your devices are not currently marked with a standardized identifier? Please describe any plans you have to change these practices in the near future.

b. *Changing current identifiers.* If you were to add a UDI or change the presentation of your current identifier, please describe your approximate expected capital and operating costs (including labor) to plan for, implement, and apply a UDI to product labeling. To provide context for your estimate, please explain your expected approach to adding a UDI, considering the possibility that a UDI might be a static number (e.g., a manufacturer/product code) or that it might include a variable number (e.g., manufacturer/product/lot code).

c. *Encoding variable data.* If you were to add a UDI bar code with variable data (such as lot or serial number) to medical device labeling, please describe how you would print the variable bar coded information. For example, do you foresee using on-line label printing, other in-house printing, or contract printers to add a UDI bar code?

d. *Production line impacts.* Considering your operations, are there products where adding a UDI (human readable or barcode; static or variable) to labeling would not be feasible without major capital investment or overhauling production lines? If so, please describe the products and suggest alternatives or solutions.

e. *Small devices and small packages.* A UDI could present a challenge for some small packages. What percentage of your product line consists of devices whose small size could make placing a UDI on a label problematic? Of those devices identified, what ''alternative placement'' of the UDI would be feasible? Please explain your reasoning. Please describe the nature of the problems and costs to solve such problems. Please suggest alternatives or solutions.

3. Questions for hospitals, nursing homes, and clinics

a. *Using a UDI.* If UDIs were placed on at least some medical devices, what functions could a UDI serve in your institution?

b. *Expenses.* What expenses do you foresee in attempting to capture and use UDIs placed on medical devices? If you foresee using UDIs, how would you modify operations in your facility?

c. *Adverse event reporting and recalls.* How would capturing the UDI change your recall management or adverse event reporting? For recalls or adverse events involving the most serious device malfunctions or failures, how have problems in device identification impaired your recall management or adverse event reporting? Please describe the magnitude of the problems you have encountered.

III. References

The following references have been placed on display in the Division of Dockets Management (see *Comments*) and may be seen by interested persons between 9 a.m. and 4 p.m., Monday through Friday.

1. 153 Cong. Rec. H10597 (daily ed., September 19, 2007) (statement of Rep. Hooley).

2. FDA, ''FDA Counterfeit Drug Task Force Report: 2006 Update,'' p. 12, (*http://www.fda.gov/oc/initiatives/counterfeit/report6__06.pdf*) (advocating use of RFID).

IV. Where and When Will the Public Workshop Occur?

We will hold the public workshop on February 12, 2009, from 9 a.m. to 5 p.m., at the Marriott Gaithersburg Washingtonian Center, 9751 Washingtonian Blvd., Gaithersburg, MD 20878.

V. Do You Have To Register To Attend a Public Workshop or To Make a Presentation?

If you wish to make a presentation at or to attend the public workshop, please register online at *http://www.fda.gov/cdrh/ocd/udi/index.html* by January 30, 2009. The online registration form will instruct you as to the information you should provide. Space may be limited, and we will close on-site registration when the maximum seating capacity is reached.

We will try to accommodate all persons who wish to make a presentation. The time allotted for presentations will depend on the number of people who wish to speak on a given topic, and the public workshop schedule. Similarly, the time allotted to each topic may vary depending on the expressed interests of persons registering for the public workshop. To obtain updates on the public workshop, please visit *http://www.fda.gov/cdrh/ocd/udi/index.html*. Additionally, regardless of whether you wish to make a presentation or simply attend the public workshop, if you need any special accommodations (such as wheelchair access or a sign language interpreter), please notify Jay Crowley (see *Contact Person*) by January 30, 2009.

Please note that on January 15, 2008, the FDA Division of Dockets Management Web site transitioned to the Federal Dockets Management System (FDMS). FDMS is a Government-wide, electronic docket management system. Electronic comments or submissions will be

accepted by FDA only through FDMS at *http://www.regulations.gov*.

Transcripts: Transcripts of the public workshop may be requested in writing from the Freedom of Information Office (HFI–35), Food and Drug Administration, 5600 Fishers Lane, rm. 6–30, Rockville, MD 20857, approximately 15 working days after the public workshop at a cost of 10 cents per page. A transcript of the public workshop will be available on the Internet at *http://www.fda.gov/cdrh/ocd/udi.index.html*.

Dated: January 6, 2009.

Jeffrey Shuren,

Associate Commissioner for Policy and Planning.

[FR Doc. E9–784 Filed 1–14–09; 8:45 am]

BILLING CODE 4160–01–S

DEPARTMENT OF HEALTH AND HUMAN SERVICES

Food and Drug Administration

[Docket No. FDA–2008–N–0656]

Secure Supply Chain Pilot Program; Notice of Pilot Program

AGENCY: Food and Drug Administration, HHS.

ACTION: Notice.

SUMMARY: The Food and Drug Administration (FDA) is announcing an opportunity for sponsors and foreign manufacturers of finished drug products and active pharmaceutical ingredients (APIs) intended for human use imported by a secure supply chain to apply to participate in a voluntary Secure Supply Chain (SSC) pilot program to be conducted by FDA's Center for Drug Evaluation and Research (CDER) and Office of Regulatory Affairs (ORA). The goal of the pilot program is to allow FDA to determine the practicality of developing a secure supply chain program. The information obtained from this pilot program will assist FDA in its determination. A Secure Supply Chain program would assist the agency in its efforts to prevent the importation of adulterated, misbranded, or unapproved drugs by allowing the agency to focus its resources on imported drugs outside the program that may pose such risks. Such a program would increase the likelihood of expedited entry for specific finished drug products and APIs imported into the United States that meet the criteria for selection under the program.

DATES: Submit written or electronic comments on this pilot program by March 16, 2009. Submit written or electronic comments on the collection of information by March 16, 2009.

ADDRESSES: Submit written comments regarding this SSC pilot program to the Division of Dockets Management (HFA–305), Food and Drug Administration, 5630 Fishers Lane, rm. 1061, Rockville, MD 20852. Submit electronic comments to *http://www.regulations.gov*. Submit written comments on the collection of information to the Division of Dockets Management (HFA–305), Food and Drug Administration, 5630 Fishers Lane, rm. 1061, Rockville, MD 20852. Submit electronic comments on the collection of information to *http://www.regulations.gov*. All comments should be identified with the docket number found in brackets in the heading of this document.

FOR FURTHER INFORMATION CONTACT: Kathleen Anderson, Office of Compliance, Division of New Drugs and Labeling Compliance, Food and Drug Administration, Center for Drug Evaluation and Research, 10903 New Hampshire Ave., Bldg. 51, rm. 5182, Silver Spring, MD 20993, 301–796–3110.

SUPPLEMENTARY INFORMATION:

I. Background

The SSC pilot program is part of FDA's risk-based approach to regulating drug imports, and it follows the President's charge to the Interagency Working Group on Import Safety to better assure that imported products are safe.

The goal of the pilot program is to allow FDA to determine the practicality of developing a secure supply chain program. The information obtained from this pilot program will assist FDA in its determination. A Secure Supply Chain program would assist the agency in its efforts to prevent the importation of adulterated, misbranded, or unapproved drugs by allowing the agency to focus its resources on imported drugs that fall outside the program and that may pose such risks. Such a program would increase the likelihood of expedited entry for specific finished drug products and APIs imported into the United States that meet the criteria for selection under the program.

II. Definitions for the Purposes of This Program

- *Affirmation of Compliance (AofC) Code*: A code designated by FDA for use by filers to convey information related to product or firm compliance with agency requirements, used to help expedite entry processing. Some AofC codes require a qualifier to provide additional information to aid in expedited processing.
- *Automated Broker Interface (ABI)*: An integral part of the Automated Commercial System, ABI is the means by which brokers or importers transmit entry data to the U.S. Customs and Border Protection (CBP).
- *Automated Commercial System (ACS)*: The system used by CBP to track, control, and process all commercial goods imported into the United States.
- *Broker/Customs Broker/Filer*: A licensed Customs broker hired to file entries for another party or a Customs ABI participant that files its own entries.
- *Customs-Trade Partnership Against Terrorism (CTPAT)*: CTPAT is the CBP initiative that partners with members of the trade community on a voluntary basis to better secure the international product supply chain to the United States.
- *Foreign Shipper*: The firm identified or declared as the shipper at time of entry into the United States.
- *Importer of Record*: The person, establishment, or representative responsible for making entry of imported goods in accordance with all laws affecting such importation.
- ''*May Proceed*'': This term means that an FDA-regulated imported product may proceed into domestic commerce after the electronic screening. This is not a decision by FDA about the product's regulatory status, and it does not preclude FDA action at a later time.
- *Manufacturer ID (MID)*: Manufacturer identification code constructed with specific segments of the manufacturer's or shipper's name and address. Refer to CBP Customs Directive Number 3550–055 (Old Number 3500–13), dated November 24, 1986, for instructions on determining the manufacturer ID.
- *Ultimate Consignee*: The party in the United States, at the time of entry or release, to whom the overseas shipper sold the imported merchandise. If at the time of entry the imported merchandise has not been sold, then the Ultimate Consignee at the time of entry or release is defined as the party in the United States to whom the overseas shipper consigned the imported merchandise.

III. SSC Pilot Program

A. Description

The SSC pilot program will be jointly administered by the Office of Compliance in CDER and the Division of Import Operations and Policy (DIOP) in ORA. To be selected to participate in the SSC pilot program, an application must meet the following criteria:

1. The applicant must submit a complete application, which is Form

FDA–3676. An applicant must be the holder of the New Drug Application (NDA) or Abbreviated New Drug Application (ANDA) or the foreign manufacturer of the imported finished drug product or API.

2. If the Ultimate Consignee identified in the SSC pilot application is an establishment subject to section 510 of the Federal Food, Drug, and Cosmetic Act (the act), then it must be in compliance with FDA's registration, drug listing, and current good manufacturing practice (cGMP) requirements and must have been in compliance over the past 3 years.

3. If the drug product identified in the SSC pilot application is a finished dosage form, then the firm identified as the Ultimate Consignee for the drug product must be identified in the NDA or ANDA.

4. If the drug product identified in the SSC pilot application is an API, then it must be used in the manufacture of an FDA approved drug product.

5. The importation of the finished drug product or API must: (a) Be from the foreign manufacturer identified in the SSC pilot application, (b) arrive through the identified port of entry and port of arrival, (c) use the identified Broker/Customs Broker/Filer, and (d) be intended for the identified Ultimate Consignee.

6. The foreign manufacturer identified in the SSC pilot application must be in compliance with requirements of the act relating to drugs.

7. The SSC applicant must have either a pending application or be certified with the CBP Customs-Trade Partnership Against Terrorism (CTPAT) Tier II certified secure supply chain. Both applicants to the SSC pilot program and firms identified in the SSC application must be CTPAT Tier II certified or Tier II pending certification at the time an application is submitted for participation in the pilot program.

8. The primary and secondary contacts identified in the SSC application must be able to answer questions and resolve issues raised by FDA.

9. The applicant must have a plan in place for promptly correcting any concerns that FDA identifies regarding its secure supply chain or specific importations.

10. The applicant must have a sufficient plan in place for recalling or correcting any finished drug products or APIs that do not meet, or are discovered not to have been manufactured in accordance with, FDA requirements. Deviations from the recall procedures for products associated with the SSC pilot program must be reported to FDA within 3 business days of identification by the applicant.

11. Applicants must comply with recordkeeping requirements of the act and its implementing regulations. For the purposes of participating in this pilot, applicants must make these records readily available to FDA upon request. Regardless of whether required by law, applicants must also maintain records that confirm the information provided in their SSC pilot applications, including documentation of their CTPAT certification status. These records must be maintained for the duration of the applicant's participation in the program and be readily available when requested by FDA. FDA requests, however, that these records be maintained and be readily available when requested by FDA for a period of at least 3 years after the pilot ends or the applicant's participation in the pilot ends. In addition, regardless of whether required by law, for each shipment of finished drug product or API, applicants must maintain records that document the product's movement through the secure supply chain from the point of manufacture to the point of receipt by the Ultimate Consignee. These records must be maintained for the duration of the applicant's participation in the program and be readily available when requested by FDA.

12. The Broker/Customs Broker/Filer identified in the SSC pilot application must be qualified for paperless entry filing to FDA's Operational and Administrative System for Import Support (OASIS).

Participation in the SSC pilot program described in this notice is voluntary. FDA plans to substantially increase the rate at which entries of the finished drug products and APIs selected for the SSC pilot program are given a ''May Proceed'' without human entry review or examination at the time of entry. As with all entries, FDA will, however, perform full electronic entry review of products included in the SSC pilot program. Some entries covered by the SSC pilot program will receive further FDA review or examination after the electronic entry review. In addition, FDA does not intend to issue a ''May Proceed'' after electronic entry review if it has information that a problem may exist with the product. Nothing in this notice restricts FDA, CBP, or any other agency from examining or inspecting any product or establishment, or affects the legal responsibilities of participants or the legal requirements of products that they are importing. FDA intends to regularly examine records and review whether participants in the SSC pilot program continue to meet the program's criteria.

FDA will assign a qualifier (a unique identifier) to each selected SSC pilot program application, and the Broker/Customs Broker/Filer will transmit the qualifier when filing entry for the product. The qualifier will accompany an AofC code, which FDA has designated as ''SSC.'' The AofC code identifies the drug product as being part of the SSC pilot program. In the event of any changes to the information contained in the SSC pilot program application, the pilot program applicant must submit a modified application detailing those changes and obtain FDA authorization of those changes in order to continue participation in the program. FDA will attempt to respond to the applicant's modified application within 15 business days after receipt.

The pilot program participants must be in full compliance with all requirements of the act relating to drug products. FDA may withdraw its selection of an application if the applicant, foreign manufacturer, or Ultimate Consignee receives a Warning Letter citing violations of the act relating to drug products or that FDA otherwise deems to have violated any requirements of the act relating to drug products. If the pilot program's criteria are no longer met, FDA intends to withdraw its selection of the relevant application. Termination of participation in the SSC pilot program will result in a return to the general rate at which entries of the finished drug products and APIs are given a ''May Proceed'' without human entry review or examination at the time of entry.

If FDA withdraws its selection of an application it will provide notice to the applicant. The applicant may provide information to show the program's criteria are met and, upon FDA review, participation in the SSC pilot program could continue or be resumed.

B. Selection of Participants for the Pilot

The Secure Supply Chain application form may not be submitted to FDA until the Office of Management and Budget (OMB) has approved the information collection associated with the SSC pilot program (see section IV of this document). After OMB approval, FDA will accept applications to participate in the program and FDA will select qualified applications. FDA will announce in the **Federal Register** OMB's approval, the date that applications may be submitted, and application submission procedures. FDA plans to select applications to participate in the SSC pilot program from not more than 100 qualified

applicants and not more than 5 drug products per applicant. FDA may, at its discretion, increase or decrease the number of applications that it selects or the number of products per applicant. The application to participate in the SSC pilot program is available for review and comment on the FDA Web site at*http://www.fda.gov/cder/fedreg/fda-3676.pdf*. Applications will be processed as they are received, on a first-come, first-served basis. All fields must be completed on the application; incomplete applications will be returned to the U.S. primary contact named in the application. Applicants will be notified in writing as to whether their applications have been selected.

C. Duration of the Pilot

The Secure Supply Chain application form may not be submitted to FDA until OMB has approved the information collection associated with the SSC pilot program. After OMB approval, FDA will accept applications to participate in the program and begin selecting applications for participation. FDA plans to finish selecting applications and begin the SSC pilot program 180 days after the date FDA announces that it is accepting applications. FDA plans to continue the SSC pilot program for 2 years after it begins. At its discretion, FDA may terminate the SSC pilot program before the close of the 2-year period, or FDA may extend the SSC pilot program beyond 2 years. Such decisions will be announced in the **Federal Register**.

D. Evaluation

FDA intends to evaluate the SSC pilot program based on several factors, including the following: Time frames for passage of goods through the entry process; the level of adherence by the SSC pilot program participants to the program's criteria; and the impact of the SSC pilot program. This evaluation will help FDA determine whether it should establish an SSC program and, if so, the parameters of such a program. FDA may also determine that it should extend the pilot program, perhaps with modifications, to continue its evaluation.

IV. Paperwork Reduction Act of 1995

Under the Paperwork Reduction Act of 1995 (the PRA) (44 U.S.C. 3501–3520), Federal agencies must obtain approval from OMB for each collection of information that they conduct or sponsor. ''Collection of information'' is defined in 44 U.S.C. 3502(3) and 5 CFR 1320.3(c) and includes agency requests or requirements that members of the public submit reports, keep records, or provide information to a third party. Section 3506(c)(2)(A) of the PRA, 44 U.S.C. 3506(c)(2)(A), requires Federal agencies to provide a 60-day notice in the **Federal Register** for each proposed collection of information before submitting the collection to OMB for approval. To comply with this requirement, FDA is publishing this notice of the proposed collection of information set forth in this document.

With respect to the collection of information associated with the SSC pilot program, FDA invites comments on the following topics: (1) Whether the proposed information collected is necessary for the proper performance of FDA's functions, including whether the information will have practical utility; (2) the accuracy of FDA's estimated burden of the proposed information collected, including the validity of the methodology and assumptions used; (3) ways to enhance the quality, utility, and clarity of the information collected; and (4) ways to minimize the burden of information collected on the respondents, including through the use of automated collection techniques, when appropriate, and other forms of information technology.

FDA is announcing an opportunity for sponsors and foreign manufacturers of finished drug products and APIs intended for human use imported via a secure supply chain to participate in a voluntary SSC pilot program. A limited number of applications that meet criteria established by FDA will be selected by FDA based largely on information submitted in the Secure Supply Chain application. Because there is an information collection under the PRA associated with the SSC pilot program, FDA must first obtain OMB approval to collect this information before accepting applications to participate in the program and before selecting qualified applications.

The information collection associated with the SSC pilot program consists of the following:

1. *Secure Supply Chain application form*. Proposed Form FDA–3676 will request:

(a) Identification and contact information for sponsors and foreign manufacturers wishing to participate in the SSC pilot program, (b) information about each drug to be imported, (c) logistical information associated with the importation and a description of the process by which the drug will be brought into the United States, and (d) A description of procedures that the applicant will follow to remedy any deficiencies that FDA may identify with the importation, including recall procedures. A draft of proposed Form FDA–3676 may be obtained at *http://www.fda.gov/cder/fedreg/fda–3676.pdf*, or by calling 301–827–1482. As explained previously, the Secure Supply Chain application form may not be submitted to FDA until OMB has approved the information collection associated with the SSC pilot program.

2. *Changes to information contained in SSC pilot program*. If there are changes to the information contained in the SSC pilot program application, then the applicant would be expected to submit to FDA a modified application detailing those changes and obtain FDA authorization before implementing them.

3. *FDA withdrawal of selection*. If FDA withdraws its selection of an application from participating in the SSC pilot program, the applicant would be given an opportunity to provide information to FDA to show that the program's criteria are met and participation should continue or be resumed. FDA will consider and act on this information at its sole discretion.

4. *Recordkeeping requirements*. Applicants will be expected to maintain records that confirm the information provided in their SSC pilot program applications, as well as records that document the drugs' movement through the secure supply chain from the point of manufacture to the point of receipt by the Ultimate Consignee, and make these records available to FDA if requested.

FDA intends to accept applications from no more than 100 qualified applicants and no more than 5 drugs per applicant to participate in the SSC pilot program. As indicated in table 1 of this document, FDA estimates that no more than 500 Secure Supply Chain application forms will be submitted by approximately 100 applicants, and that it will take approximately 3.5 hours to complete and submit each application form to FDA. FDA anticipates that approximately 5 applicants will need to submit a modified Secure Supply Chain application form, and that each modified application will take approximately 60 minutes to complete and submit to FDA. FDA anticipates that it will need to withdraw its selection of only one application under the SSC pilot program, and that it will take approximately 1 hour for an applicant to submit information in response. The reporting burden estimated in table 1 also includes the time for submitting the address where records associated with the SSC pilot program will be kept, and for submitting the FDA assigned qualifier code and Affirmation of Compliance code for each imported drug.

As indicated in table 2 of this document, FDA estimates that approximately 500 records associated with the SSC pilot program will be kept by approximately 100 applicants, and that each record will take about 15 minutes to maintain.

Because FDA intends to continue the SSC pilot program for 2 years, these burden estimates are for a one-time burden over a 2-year period.

FDA estimates the burden of this collection of information as follows:

TABLE 1.—ESTIMATED REPORTING BURDEN[1]

SSC Pilot Program	No. of Respondents	No. of Responses per Respondent	Total Responses	Hours per Response	Total Hours
Secure Supply Chain application form	100	5	500	3.5	1,750
Modified Secure Supply Chain application form	5	1	5	60 minutes	5
Information submitted in response to termination of participation	1	1	1	1	1
Total					1,755

[1] There are no capital costs or operating and maintenance costs associated with this collection of information.

TABLE 2.—ESTIMATED RECORDKEEPING BURDEN[1]

SSC Pilot Program	No. of Recordkeepers	No. of Records per Recordkeeper	Total Records	Hours per Record	Total Hours
SSC Pilot Program records	100	5	500	15 minutes	125
Total					125

[1] There are no capital costs or operating and maintenance costs associated with this collection of information.

V. Comments

Interested persons may submit to the Division of Dockets Management (see **ADDRESSES**) written or electronic comments regarding this document. Submit a single copy of electronic comments or two paper copies of any mailed comments, except that individuals may submit one paper copy. Comments are to be identified with the docket number found in brackets in the heading of this document. Received comments may be seen in the Division of Dockets Management between 9 a.m. and 4 p.m., Monday through Friday.

Please note that on January 15, 2008, the FDA Division of Dockets Management Web site transitioned to the Federal Dockets Management System (FDMS). FDMS is a Government-wide, electronic docket management system. Electronic submissions will be accepted by FDA through FDMS only.

Dated: January 8, 2009.

Jeffrey Shuren,

Associate Comissioner for Policy and Planning.

[FR Doc. E9–791 Filed 1–14–09; 8:45 am]

BILLING CODE 4160–01–S

DEPARTMENT OF HEALTH AND HUMAN SERVICES

Indian Health Service

Request for Public Comment: 30-Day Proposed Information Collection: Indian Health Service Background Investigations of Individuals in Positions Involving Regular Contact With or Control Over Indian Children, OPM-306

Correction

In notice document E8–30330 beginning on page 78374 in the issue of Monday, December 22, 2008, make the following correction:

On page 78374, in the third column, under *Form Number*, in the 10th line ''IRS'' should read ''IHS''.

[FR Doc. Z8–30330 Filed 1–14–09; 8:45 am]

BILLING CODE 1505–01–D

DEPARTMENT OF HEALTH AND HUMAN SERVICES

Indian Health Service

Request for Public Comment: 30-Day Proposed Information Collection: Indian Health Service; HIV Knowledge/Attitudes/Practice Customer Survey

Correction

In notice document E8–30329 beginning on page 78375 in the issue of Monday, December 22, 2008, make the following corrections:

1. On page 78375, in the third column, under *Proposed Collection*, in the sixth line ''IRS'' should read ''IHS''.

2. On the same page, in the same column, in the same paragraph, six lines from the bottom ''IRS'' should read ''IHS''.

3. On the same page, in the same column, in the last paragraph, five lines from the bottom ''AIIAN'' should read ''AI/AN''.

4. On the same page, in the same column, in the same paragraph, four lines from the bottom ''lETS'' should read ''IHS''.

[FR Doc. Z8–30329 Filed 1–14–09; 8:45 am]

BILLING CODE 1505–01–D

DEPARTMENT OF HEALTH AND HUMAN SERVICES

National Institutes of Health

National Institute of Allergy and Infectious Diseases; Notice of Closed Meetings

Pursuant to section 10(d) of the Federal Advisory Committee Act, as amended (5 U.S.C. Appendix 2), notice is hereby given of the following meetings.

The meetings will be closed to the public in accordance with the provisions set forth in sections 552b(c)(4) and 552b(c)(6), Title 5 U.S.C., as amended. The grant applications and the discussions could disclose confidential trade secrets or commercial property such as patentable material, and personal information concerning individuals associated with the grant applications, the disclosure of which would constitute a clearly unwarranted invasion of personal privacy.

Name of Committee: National Institute of Allergy and Infectious Diseases Special Emphasis Panel; Immune Regulation of Inflammatory Pulmonary Disease.

Date: February 4, 2009.

Time: 1 p.m. to 4 p.m.

Agenda: To review and evaluate grant applications.

Place: National Institutes of Health, 6700B Rockledge Drive, 3258, Bethesda, MD 20817, (Telephone Conference Call).

Contact Person: Eric Lorenzo, PhD, Scientific Review Officer, Scientific Review Program, DEA/NIAID/NIH/DHHS, Room 3258, 6700B Rockledge Drive, MSC–7616, Bethesda, MD 20892–7616, 301–451–2640, *lorenzoe@niaid.nih.gov.*

Name of Committee: National Institute of Allergy and Infectious Diseases Special Emphasis Panel; Lymphocyte Abnormalities.

Date: February 4, 2009.

Time: 2 p.m. to 6 p.m.

Agenda: To review and evaluate grant applications.

Place: National Institutes of Health, 6700B Rockledge Drive, Bethesda, MD 20817, (Telephone Conference Call).

Contact Person: Wendy F. Davidson, PhD, Scientific Review Officer, Scientific Review Program, Division of Extramural Activities, NIH/NIAID/DHHS, 6700B Rockledge Drive, MSC 7616, Bethesda, MD 20892–7616, 301–402–8399, *davidsonw@mail.nih.gov.*

(Catalogue of Federal Domestic Assistance Program Nos. 93.855, Allergy, Immunology, and Transplantation Research; 93.856, Microbiology and Infectious Diseases Research, National Institutes of Health, HHS)

Dated: January 8, 2009.

Jennifer Spaeth,

Director, Office of Federal Advisory Committee Policy.

[FR Doc. E9–725 Filed 1–14–09; 8:45 am]

BILLING CODE 4140–01–P

DEPARTMENT OF HOMELAND SECURITY

U.S. Customs and Border Protection

Agency Information Collection Activities: Entry Summary

AGENCY: U.S. Customs and Border Protection, Department of Homeland Security.

ACTION: 30-Day notice and request for comments; Extension of an existing information collection: 1651–0022.

SUMMARY: U.S. Customs and Border Protection (CBP) of the Department of Homeland Security has submitted the following information collection request to the Office of Management and Budget (OMB) for review and approval in accordance with the Paperwork Reduction Act: Entry Summary. This is a proposed extension of an information collection that was previously approved. CBP is proposing that this information collection be extended with a change to the burden hours. This document is published to obtain comments from the public and affected agencies. This proposed information collection was previously published in the **Federal Register** (73 FR 36545) on June 27, 2008, allowing for a 60-day comment period. This notice allows for an additional 30 days for public comments. This process is conducted in accordance with 5 CFR 1320.10.

DATES: Written comments should be received on or before February 17, 2009.

ADDRESSES: Interested persons are invited to submit written comments on the proposed information collection to the Office of Information and Regulatory Affairs, Office of Management and Budget. Comments should be addressed to the OMB Desk Officer for Customs and Border Protection, Department of Homeland Security, and sent via electronic mail to *oira_submission@omb.eop.gov* or faxed to (202) 395–6974.

SUPPLEMENTARY INFORMATION: U.S. Customs and Border Protection (CBP) encourages the general public and affected Federal agencies to submit written comments and suggestions on proposed and/or continuing information collection requests pursuant to the Paperwork Reduction Act (Pub. L.104–13). Your comments should address one of the following four points:

(1) Evaluate whether the proposed collection of information is necessary for the proper performance of the functions of the agency/component, including whether the information will have practical utility;

(2) Evaluate the accuracy of the agencies'/components' estimate of the burden of the proposed collection of information, including the validity of the methodology and assumptions used;

(3) Enhance the quality, utility, and clarity of the information to be collected; and

(4) Minimize the burden of the collections of information on those who are to respond, including the use of appropriate automated, electronic, mechanical, or other technological collection techniques or other forms of information technology, e.g., permitting electronic submission of responses.

Title: Entry Summary.

OMB Number: 1651–0022.

Form Number: CBP Form 7501.

Abstract: Form 7501 is used by CBP as a record of the import transaction, to collect proper duty, taxes, exactions, certifications and enforcement endorsements. New requirements have been added to the 7501 for entry filers importing softwood lumber into the U.S., in accordance with the provisions of the Softwood Lumber Act of 2008 (SLA 2008), Title VIII of the Tariff Act of 1930.

Current Actions: This submission is being made to extend the expiration date. The burden hours were increased to allow for the implementation of the Softwood Lumber Act of 2008.

Type of Review: Extension (with change).

Affected Public: Business or other for-profit institutions.

7501 Formal Entry

Estimated Number of Respondents: 10,000.

Estimated Number of Annual Responses per Respondent: 1,920.

Estimated Total Annual Responses: 19,200,000.

Estimated Time per Response: 20 minutes.

Estimated Total Annual Burden Hours: 6,393,600.

7501 Formal Entry w/Softwood Lumber Act of 2008

Estimated Number of Respondents: 210.

Estimated Number of Annual Responses per Respondent: 1,905.

Estimated Total Annual Responses: 400,050.

Estimated Time per Response: 40 minutes.

Estimated Total Annual Burden Hours: 266,433.

7501 Informal Entry

Estimated Number of Respondents: 28,500.

Estimated Number of Annual Responses per Respondent: 98.

Estimated Total Annual Responses: 2,793,000.

Estimated Time per Response: 5 minutes.

Estimated Total Annual Burden Hours: 232,657.

If additional information is required contact: Tracey Denning, U.S. Customs and Border Protection, 1300 Pennsylvania Avenue, NW., Room 3.2.C, Washington, DC 20229, at 202–344–1429.

Dated: January 7, 2009.

Tracey Denning,

Agency Clearance Officer, Customs and Border Protection.

[FR Doc. E9–659 Filed 1–14–09; 8:45 am]

BILLING CODE 9111–14–P

DEPARTMENT OF THE INTERIOR

Bureau of Land Management

[LLIB00000 L11500000.CB0000 LXSS024D0000: 4500006248]

Call for Nomination To Fill Vacancy on BLM Boise District Resource Advisory Council

AGENCY: Bureau of Land Management, Department of Interior.

ACTION: Call for nomination to fill vacancy on BLM Boise District Resource Advisory Council.

SUMMARY: The purpose of this notice is to request public nominations to fill one position in Category Three, (Elected Official), for Idaho's Boise District Resource Advisory Council. The Federal Land Policy and Management Act (FLPMA) (43 U.S.C. 1730) directs the Secretary of the Interior to involve the public in planning and issues related to management of lands administered by the BLM. Section 309 of FLPMA directs the Secretary to select 10 to 15 member citizen-based advisory councils, which are consistent with the requirements of the Federal Advisory Committee Act (FACA). RACs are found at 43 CFR part 1784.

DATES: The BLM will accept public nominations until March 2, 2009. Applicants are requested to submit a completed nomination form and letters of reference to the address listed below.

FOR FURTHER INFORMATION CONTACT: Contact MJ Byrne, Coordinator, Resource Advisory Council, Boise District, Bureau of Land Management, 3948 Development Avenue, Boise, Idaho 83705, phone (208) 384–3393.

SUPPLEMENTARY INFORMATION: The Bureau of Land Management's (BLM), Boise District Resource Advisory Council is hosting a call for nominations for the position of Elected Official (representatives of state, county, or local elected office) on the Advisory Council. Upon appointment, the individual selected to this position will fill the seat until September 30, 2009, the remainder of this position's term. Individuals may nominate themselves or others. Nominees must be residents of Idaho and are encouraged to reside within the geographical boundaries of the Boise District. The BLM will evaluate nominees based on their education, training, experience, and their knowledge of the geographical area of the RAC. Nominees should demonstrate a commitment to collaborative resource decision making.

The following must accompany nominations:

- Letters of reference from represented interest or organizations,
- A completed background information nomination form; and,
- Any other information that highlights the nominee's qualifications.

David Wolf,

Associate District Manager.

[FR Doc. E9–768 Filed 1–14–09; 8:45 am]

BILLING CODE 4310–GG–P

DEPARTMENT OF THE INTERIOR

Bureau of Land Management

[LLNV952000–09–L14200000–BJ0000; 09–08807; TAS: 14X1109]

Filing of Plats of Survey; Nevada

AGENCY: Bureau of Land Management, Interior.

ACTION: Notice.

SUMMARY: The purpose of this notice is to inform the public and interested State and local government officials of the filing of Plats of Survey in Nevada.

DATES: *Effective Dates:* Filing is effective at 10 a.m. on the dates indicated below.

FOR FURTHER INFORMATION CONTACT: David D. Morlan, Chief, Branch of Geographic Sciences, Bureau of Land Management (BLM), Nevada State Office, 1340 Financial Blvd., P.O. Box 12000, Reno, NV 89520, 775–861–6541.

SUPPLEMENTARY INFORMATION:

1. The Plat of Survey of the following described lands was officially filed at the Nevada State Office, Reno, Nevada, on October 16, 2008:

The plat representing the dependent resurvey of portions of the south and west boundaries of Township 19 North, Range 31 East, Mount Diablo Meridian, Nevada, under Group No. 858, was accepted October 9, 2008.

This survey was executed to meet certain administrative needs of the United States Fish and Wildlife Service.

2. The Plats of Survey of the following described lands were officially filed at the Nevada State Office, Reno, Nevada, on December 9, 2008:

The plat representing the dependent resurvey of a portion of the north boundary of Township 10 South, Range 62 East; and the dependent resurvey of a portion of the subdivisional lines, and the subdivision of sections 22, 27 and 34, Township 9 South, Range 62 East, Mount Diablo Meridian, Nevada, under Group No. 828, was accepted December 2, 2008.

The plat, in two sheets, representing the dependent resurvey of a portion of the east boundary and a portion of the subdivisional lines, and the subdivision of certain sections, Township 10 South, Range 62 East, Mount Diablo Meridian, Nevada, under Group No. 828, was accepted December 2, 2008.

The plat representing the dependent resurvey of a portion of the east boundary and a portion of the subdivisional lines, and the subdivision of sections 13, 24 and 25, Township 11 South, Range 62 East, Mount Diablo Meridian, Nevada, under Group No. 828, was accepted December 2, 2008.

These surveys were executed to meet certain administrative needs of the United States Fish and Wildlife Service.

3. The Supplemental Plat of Survey of the following described lands was officially filed at the Nevada State Office, Reno, Nevada, on December 18, 2008:

The supplemental plat, showing the subdivision of former lot 19, sec. 19, Township 22 South, Range 60 East, Mount Diablo Meridian, Nevada, was accepted December 16, 2008.

This supplemental plat was prepared to meet certain administrative needs of the Bureau of Land Management.

4. The above-listed surveys are now the basic record for describing the lands for all authorized purposes. These surveys have been placed in the open files in the BLM Nevada State Office and are available to the public as a matter of information. Copies of the surveys and related field notes may be furnished to the public upon payment of the appropriate fees.

Dated: January 6, 2009.

David D. Morlan,

Chief Cadastral Surveyor, Nevada.

[FR Doc. E9–729 Filed 1–14–09; 8:45 am]

BILLING CODE 4310–HC–P

DEPARTMENT OF THE INTERIOR

Bureau of Land Management

[LLWO–3200000 L13100000.PP0000 L.X.EM OSHL000.241A]

Potential for Oil Shale Development; Call for Nominations—Oil Shale Research, Development, and Demonstration (R, D, and D) Program

AGENCY: Bureau of Land Management (BLM), Interior.

ACTION: Notice.

SUMMARY: The BLM solicits the nomination of parcels to be leased for R, D, and D of oil shale recovery technologies in Colorado, Utah, and Wyoming.

DATES: Nominations for oil shale R, D, and D leases can be made January 15, 2009 through March 2, 2009.

ADDRESSES: Please send nominations to the BLM state director for the state in which the parcel you are nominating is located: Sally Wisely, State Director, BLM, Colorado State Office, 2850 Youngfield Street, Lakewood, Colorado, 80215–7076; Selma Sierra, State Director, BLM, Utah State Office, 400 West 200 South, Suite 500, Salt Lake City, Utah, 84145–0155; and Bob Bennett, State Director, BLM, Wyoming State Office, 5353 Yellowstone Road, P.O. Box 1828, Cheyenne, Wyoming, 82003.

FOR FURTHER INFORMATION CONTACT: Charlie Beecham, BLM, Colorado State Office, 303–239–3773; Jeff McKenzie, BLM, Utah State Office, 801–539–4038; and Robert Janssen, BLM, Wyoming State Office, 307–775–6206.

SUPPLEMENTARY INFORMATION: On June 9, 2005, the BLM published in the **Federal Register** a notice entitled ''Potential for Oil Shale Development; Call for Nominations-Oil Shale Research, Development, and Demonstration (R, D, and D) Program'' (70 FR 33753). As a result of that notice, the BLM issued six R, D, and D leases. Section 369 of the Energy Policy Act of 2005 (EP Act) (42 U.S.C. 15927) addresses oil shale development and directs the Secretary of the Interior to make public lands available for conducting oil shale research and development activities.

In accordance with the EP Act, the BLM is soliciting for nomination parcels to be leased for R, D, and D of oil shale recovery technologies. The lease form for this round of R, D, and D leases has been revised from the one published in the June 9, 2005 notice (see 70 FR 33755) to make it consistent with the oil shale regulations published on November 18, 2008 (see 73 FR 69414), including changes to the provisions on royalty and lease conversion. As discussed below, the lease form is also revised by increasing the maximum acreage of the R, D, and D lease and by removing the option for additional preference-right acreage. The revised R, D, and D lease form can be found at: *http://www.blm.gov/wo/st/en/prog/energy/oilshale_2.html*. Please contact Nick Douglas at (202) 557–3377 if you have any questions.

The BLM is soliciting the nomination of parcels, not to exceed 640 acres, for the conduct of oil shale R, D, and D under a 10-year lease agreement. Under the conversion regulations at 43 CFR 3926.10, an R, D, and D lease is eligible for conversion to a 20-year lease after producing commercial quantities of shale oil from the lease and after meeting the other provisions of that section.

The BLM may issue one or more R, D, and D leases in each of the states of Colorado, Utah, and Wyoming based on review of the nominations and analysis under the National Environmental Policy Act (NEPA). The R, D, and D nominations will be reviewed by an interdisciplinary team. The BLM will request the participation of a representative of each of the States of Colorado, Utah, and Wyoming, as appropriate, and the Departments of Defense and Energy. The review will consider the potential of proposals to advance knowledge of effective technology, economic viability, and the means of managing the environmental effects of oil shale development. The review will also consider the potential environmental, social, and economic impacts on the site or the region associated with each nomination.

The interdisciplinary team will rate the nominations based on the team's review. Nominations that the interdisciplinary team rates and recommends for issuance of an R, D, and D lease will be analyzed under NEPA. The NEPA analysis will also document compliance with the National Historic Preservation Act, the Endangered Species Act, and any other applicable Federal statute. At the conclusion of the NEPA analysis, the BLM may issue one or more R, D, and D leases.

If the BLM receives two or more nominations to lease the same lands, the BLM will issue an R, D, and D lease, if at all, to the qualified nominator whose proposal is rated highest by the interdisciplinary team.

The time required for NEPA analysis and documentation may differ depending on: (1) Whether the application is for a tract that has previously been the subject of NEPA analysis for oil shale operations, (2) the method of shale oil extraction, and (3) whether the application involves mining or in-place shale oil recovery. Accordingly, some R, D, and D leases may be awarded prior to others. Each applicant will be responsible for the costs of NEPA analysis of its nomination.

Lease nominations must, at a minimum, contain the following information:

(1) Name, address, and telephone number of the applicant, and the name, address, and telephone number of the representative of the applicant who will be responsible for conducting the operational activities.

(2) Statement of qualifications to hold a mineral lease under the Mineral Leasing Act (MLA). Qualification requirements can be found in 43 CFR subpart 3902 of the final oil shale regulations (see 73 FR 69414).

(3) Description of the lands, not to exceed 640 acres, in accordance with 43 CFR 3901.10 of the oil shale regulations, together with any rights-of-way required to support the development of the oil shale R, D, and D lease.

(4) A narrative description of the proposed methodology for recovering oil from oil shale, including a description of all equipment and facilities needed to support the proposed technology.

(5) A narrative description of the results of laboratory and/or field tests of the proposed technology.

(6) A schedule of operations for the life of the project and proposed plan for processing, marketing, and delivering the shale oil to the market.

(7) A map of existing land use authorizations on the nominated acreage.

(8) Estimated shale oil and/or oil shale resources within the nominated acreage boundary.

(9) The method of shale oil storage and the method of spent oil shale disposal.

(10) A description of any interim environmental mitigation and reclamation.

(11) The method of final reclamation and abandonment and associated projected costs of final reclamation.

(12) Proof of investment capacity.

(13) A description of the commitments of partners, if any.

(14) A statement from a surety qualified to furnish bonds to the United States Government of the bond amount for which the applicant qualifies under the surety's underwriting criteria.

(15) A non-refundable application fee of $4,000.00.

The non-refundable application processing fee is increased from $2,000 to $4,000 per application based on estimates of costs for processing the previous R, D, and D lease applications and a similar $4,000 processing fee authorized under the Consolidated Appropriations Act of 2008 (Pub. L. 110–161) for oil and gas activities.

Applications submitted for lands within the multi-mineral leasing zone in Colorado must demonstrate the potential capability to extract shale oil, dawsonite, and nahcolite or demonstrate a potential capability to extract shale oil while preserving the other minerals for future recovery.

An applicant should prominently note and segregate any information submitted with the application that contains proprietary information or trade secrets, if the disclosure of this information to the public would cause commercial or financial injury to the applicant's competitive position. The BLM will protect the confidentiality of such information to the extent permitted by the Freedom of Information Act (FOIA). Any FOIA requests for such information will be handled in accordance with the regulations at 43 CFR 2.23.

The original R, D, and D leases were issued to generate interest in and to encourage research and development of oil shale resources on Federal lands. As an incentive for performing research and development, additional acreage for a preference lease area was made available to the original R, D, and D lessees. There was significant interest in response to the original R, D, and D lease offerings and this interest in research and development of oil shale on Federal lands continues, which suggests that incentives for R, D, and D beyond those conferred by the R, D, and D lease itself, are not needed. Since offering the original R, D, and D leases, and completing an analysis of oil shale potential and availability on public lands, the Department has determined that an R, D, and D lease of 640 acres is likely to provide reserves sufficient to support a commercial operation. For these reasons, the revised R, D, and D leases do not provide additional preference lease areas over and above the R, D, and D acreage of 640 acres. The maximum acreage of the revised lease is increased from 160 acres to 640 acres, which is sufficient to accommodate an R, D, and D project based on public comments to the initial **Federal Register** Notice of November 22, 2004 (69 FR 67935). Public comments received at that time indicated that a reasonable acreage size for an R, D, and D lease ranged from 40 to 640 acres. The BLM believes that 640 acres is sufficient acreage to support research and development and also to allow for the eventual expansion into commercial operations.

To encourage the use of new technologies, the BLM will only consider applications that demonstrate new technologies not currently being tested on the R, D, and D leases issued as a result of the June 9, 2005, call for nominations. See the **FOR FURTHER INFORMATION CONTACT** section of this Notice if there are questions on technologies currently being tested on the existing R, D, and D leases. Applications must document field demonstration of the feasibility of the proposed oil shale extraction methodology(ies). Entities that currently hold R, D, and D leases on BLM public lands are excluded from submitting additional applications for leases. The BLM will only accept one application per entity.

Henri R. Bisson,

Deputy Director, Operations, Bureau of Land Management.

[FR Doc. E9–525 Filed 1–14–09; 8:45 am]

BILLING CODE 4310–84–P

DEPARTMENT OF THE INTERIOR

Bureau of Land Management

[CO–921; COC–70538; CO–130; COC 69290]

Notice of Availability of the Draft Environmental Impact Statement for the Proposed Red Cliff Coal Mine and Associated Surface Facilities Including a Railroad Spur Line COC 69290, and Federal Coal Lease by Application COC 70538, in Garfield and Mesa Counties, CO

AGENCY: Bureau of Land Management, Interior.

ACTION: Notice of Availability.

SUMMARY: The Bureau of Land Management (BLM), Colorado State Office, Lakewood, Colorado, hereby gives notice that a public hearing will be held to receive comments on the Draft Environmental Impact Statement (DEIS), Maximum Economic Recovery (MER) and Fair Market Value (FMV) of Federal coal to be offered. An application for coal lease was filed by CAM-Colorado, LLC (CAM) on September 12, 2006. As a result, the BLM offers for competitive lease 14,466 acres of Federal coal in Garfield County, Colorado.

In accordance with the National Environmental Policy Act of 1969 (NEPA) and the Federal Land Policy and Management Act of 1976, the BLM has prepared a DEIS for the proposed Red Cliff Mine, located near Loma, Colorado. The DEIS responds to Right-of-Way (ROW) Applications for a railroad spur and associated mine facilities on Federal Lands, and an electrical transmission line. In addition, a Federal Coal Lease by Application (LBA) was submitted by CAM-Colorado, on September 12, 2006. The BLM is providing this notice to announce the availability of the Red Cliff Mine DEIS, the proposed LBA, and the public hearing requesting comments on the DEIS, MER and FMV, pursuant to 40 CFR 1503.1 and 43 CFR 3425.4.

The Environmental Impact Statement (EIS) is being prepared in cooperation with the Office of Surface Mining Reclamation and Enforcement (OSM); U.S. Army Corps of Engineers (USACE); the Colorado Department of Natural Resources; the Colorado Division of Reclamation, Mining and Safety (CDRMS); the Colorado Division of Wildlife (CDOW); and Garfield and Mesa counties.

The EIS analyzes the development of surface facilities for coal mining associated with CAM's proposed underground Red Cliff Mine, including roads, a water pipeline, electric transmission line, conveyers, coal stockpile and waste disposal areas, a coal preparation plant, the mine portal, other administrative and operations facilities, and a railroad spur line that will connect to the existing Union Pacific Railroad line near Mack, Colorado. The EIS also considers the effects of extracting coal from CAM's existing Federal coal leases, defined as logical mining unit COC–57198, and issuance of an adjoining Federal coal LBA COC–070538. This notice announces the opening of the public comment period for the DEIS.

DATES: Written comments on the DEIS, MER, and FMV will be accepted for 60 calendar days following the date that the Environmental Protection Agency publishes a NOA in the **Federal Register**. The public hearing will be held at a date, time and location to be announced in the local media, displayed on the Web site *http://www.blm.gov/rmp/co/redcliffmine/*, or obtained by calling the BLM Grand Junction Field Office at 970–244–3000, Monday through Friday between 7:30 a.m. and 4:30 p.m. Mountain Standard Time (MST).

ADDRESSES: You may submit comments by any of the following methods:

- *Web site: http://www.blm.gov/rmp/co/redcliffmine/.*
- *E-mail: RedCliffMineEIS@urscorp.com.*

- *Fax:* 303–239–3808.
- *Mail:* Glenn Wallace, BLM, 2850 Youngfield Street, Lakewood, CO 80215.

Please note that public comments and information submitted, including names, street addresses, and e-mail addresses of respondents, will be available for public review and disclosure at the above address during regular business hours (8 a.m. to 4 p.m.), Monday through Friday, except holidays. Before including your address, phone number, e-mail address, or other personal identifying information in your comment, please be aware that your entire comment, including your personal identifying information, may be made publicly available at any time. While you can request in your comment to withhold your personal identifying information from public review, we cannot guarantee that we will be able to do so. Comments and responses to comments will be published as part of the Final EIS.

Copies of the DEIS for the Proposed Red Cliff Coal Mine are available at the Web site *http://www.blm.gov/rmp/co/redcliffmine/*. A limited number of printed copies of the DEIS and copies of the DEIS on compact disk are available at the BLM Grand Junction Field Office, located at 2815 H Road, Grand Junction, Colorado 81506, and at the Colorado State Office, 2850 Youngfield Street, Lakewood, Colorado 80215. In addition, a printed copy of the DEIS is available for review at the Fruita Branch Library at 325 E. Aspen Avenue, in Fruita, Colorado and at the Mesa County Central Library at 530 Grand Avenue, in Grand Junction, Colorado.

FOR FURTHER INFORMATION CONTACT: Glenn Wallace, 303–239–3736, *glenn_wallace@blm.gov*, or by mail at 2850 Youngfield Street, Lakewood, CO 80215.

SUPPLEMENTARY INFORMATION: The BLM, Colorado State Office, Lakewood, Colorado, hereby gives notice of the public hearing at a date, time and location to be announced in the local media, displayed on the Web site *http://www.blm.gov/rmp/co/redcliffmine/*, or obtained by calling the BLM Grand Junction Field Office, 970–244–3000, Monday through Friday between 7:30 a.m. and 4:30 p.m. Mountain Standard Time (MST).

The BLM proposes to offer for competitive lease Federal coal in the lands described as:

T. 7 S, R. 101 W., 6th P.M. Colorado
Sec. 7, SE¼SE¼, Lot 8
Sec. 8, S½SW¼, NE¼SW¼, SE¼
Sec. 16, TR 43, Lots 5 and 6
Sec. 17, All
Sec. 18, E½E½, Lots 5 to 8 inclusive
Sec. 19, E½E½, Lots 5 to 8 inclusive
Sec. 20, All
Sec. 21, E½, S½NW¼, SW¼, Lots 1 and 2
Sec. 28, N½, SW¼, W½SE¼, NE¼SE¼
Sec. 29, All
Sec. 30, TR 44, Lots 5 to 10 inclusive
Sec. 31, Lots 5 to 8 inclusive
Sec. 32, NE¼, N½NW¼, Lots 1 to 4 inclusive
Sec. 33, NW¼, Lots 3 and 4

T. 8 S., R. 101 W. 6th P.M. Colorado
Sec. 4, Lot 8
Sec. 5, S½, Lots 5 to 20 inclusive
Sec. 6, SE¼, Lots 8 to 27 inclusive
Sec .7, E½, E½W½, Lots 5 to 8 inclusive
Sec. 8, All

T. 7 S., R., 102 W., 6th P. M. Colorado
Sec. 13, S½NW¼, SW¼, SW¼NE¼, W½SE¼, Lots 2 to 4 inclusive
Sec. 14, S½N½, S½
Sec. 23, E½, NW¼, E½SW¼, Lots 1 and 4
Sec. 24, W½E½, W½, Lots 1 to 4 inclusive
Sec. 25, W½E½, W½, Lots 1 to 4 inclusive
Sec. 26, All
Sec. 35, All
Sec. 36, W½E½, W½, Lots 1 to 4 inclusive

T. 8 S., R. 102 W., 6th P. M. Colorado
Sec. 1, S½, Lots 5 to 20 inclusive
Sec. 12, N½, SE¼

Containing approximately 14,466 acres in Garfield County, Colorado. The public hearing described above is for the purpose of soliciting public input regarding the MER and FMV of the proposed coal lease.

The proposed Red Cliff Mine is located approximately 11 miles north of the towns of Mack and Loma, Colorado, and 1.5 miles east of State Highway (SH) 139. CAM is proposing a new mine portal and associated facilities to extract low-sulfur coal from Federal coal leases C–0125515, C–0125516 and C–0125439 (defined collectively as logical mining unit COC–57198), from LBA COC 070538 filed September 12, 2006, as well as a small amount of private coal.

CAM proposes to locate surface facilities on existing and potential new coal leases with the majority of the surface facilities located off-lease on BLM administered public lands within the boundaries of the proposed ROW (approximately 1,140 acres). These facilities will include, but not be limited to, a waste rock pile, railroad loop, unit train loadout, a coal conveyor, storage and equipment yards, sewage treatment plant, water tank, fuel oil storage and various buildings. County Road (CR) X will be upgraded to serve as the mine access road from SH 139. The railroad spur will be located on BLM and private lands, with the railroad connecting to the existing Union Pacific Railroad (UPRR) near Mack, Colorado. The proposed railroad will traverse approximately 9.5 miles of BLM administered public land and approximately 5 miles of private land. A water diversion will be constructed in Mack Wash and the water pipeline will follow the proposed railroad spur. The railroad spur would serve only the Red Cliff Mine for the purpose of transporting coal to market. CAM will own the railroad spur, but the trains using the spur will be operated by the UPRR or other railroad companies. The draft EIS discusses BLM's analysis and proposed conclusion that CAM will not operate a common carrier railroad.

Electric power will be needed at the mine to run the underground mining machinery, the conveyor system, and other mine support facilities. The local utility, Grand Valley Power (GVP), has applied to BLM for a ROW to supply the necessary electric power. GVP will need to construct a new 69-kilovolt (kV) transmission line from the Uintah Substation to the mine to supply this power. The transmission line will be approximately 14 miles long, with approximately 7 miles on federally managed lands and 7 miles on private land, depending on which alternative route is chosen. This ROW application is analyzed in the EIS as a connected action as is the LBA filed by CAM (COC–070538) for approximately 11,660 acres adjacent to CAM's existing leases. BLM determined that, if this coal is to be leased, it would be by a competitive bid process. BLM has modified the proposed LBA area to include 14,466 acres. The EIS analysis area includes a total future lease area of about 23,000 acres which corresponds to the estimated life of the mine.

CAM proposes to conduct underground mining 24 hours per day, 7 days per week, and 365 days per year by room and pillar and longwall mining techniques. CAM's production from the Red Cliff Mine would be up to 8 million tons per year of clean coal depending on market conditions, with an estimated mine life of 30 years.

A mine permit application has been filed for CAM's existing leases in accordance with the OSM and the CDRMS regulations. This EIS will meet the NEPA requirements for the mine permit for the existing Federal coal leases, and is intended to provide necessary information to facilitate the USACE, Colorado Public Utility Commission, and Garfield and Mesa Counties' permitting decisions regarding the project. There will be additional opportunities for public involvement as the mine permit application is processed.

The DEIS analyzes the potential impacts of the proposed action and connected actions and a No-Action alternative. Alternatives to individual

project components were considered that were consistent with the purpose and need, which is to mine and transport coal for sale at competitive prices to help supply the energy needs of the United States. Alternatives to project components were included for detailed analysis if they were found to be practical, feasible, reduced environmental impacts, and/or addressed public and agency concerns. A wide range and variety of alternatives were examined, resulting in the following alternative project components that are analyzed in detail: grade separated railroad crossing at Mesa County Road (CR) M.8; noiseless grade crossings at CR M.8 and CR 10; construction of an electric transmission line along CR 16 crossing BLM and private lands north of the Highline Canal; construction of an electric transmission line along CR 16 to the Highline Canal and then along section lines to avoid as many private land parcels as possible; and construction of an electric transmission line along CR 14 to just north of the Highline Canal and then northwesterly and north to join the proposed railroad alignment east of SH 139.

Required consultations are in progress or have been completed, including consultations with tribal governments and the State Historic Preservation Officer, as required by the National Historic Preservation Act; consultations with the U.S. Fish & Wildlife Service as required by the Endangered Species Act; and consultations with the USACE as required by the Clean Water Act.

Raul Morales,

Grand Junction Associate Field Manager.

[FR Doc. E9–769 Filed 1–14–09; 8:45 am]

BILLING CODE 4310–JB–P

DEPARTMENT OF THE INTERIOR

National Park Service

General Management Plan and Environmental Impact Statement, Big Thicket National Preserve, Texas

AGENCY: National Park Service, Department of the Interior.

ACTION: Notice of intent to prepare an environmental impact statement for the general management plan (GMP), Big Thicket National Preserve.

SUMMARY: Pursuant to the National Environmental Policy Act of 1969, 42 U.S.C. 4332(2)(C), the National Park Service (NPS) is preparing an environmental impact statement for a general management plan for Big Thicket National Preserve, Texas. The environmental impact statement will be approved by the Director, Intermountain Region.

The general management plan will prescribe the resource conditions and visitor experiences that are to be achieved and maintained in the Preserve over the next 15 to 20 years. The clarification of what must be achieved according to law and policy will be based on review of the Preserve's purpose, significance, special mandates, and the body of laws and policies directing park management. Based on determinations of desired conditions, the general management plan will outline the kinds of resource management activities, visitor activities, and development that would be appropriate in the future. A range of reasonable management alternatives will be developed through this planning process and will include, at a minimum, a no-action and a preferred alternative.

The NPS is required to prepare a GMP for all NPS units. A GNP was completed for Big Thicket National Preserve in 1980. The 1980 GMP does not address lands added to the Preserve since 1993 or current NPS park planning standards or NPS management policies.

Issues to be addressed will include but are not limited to the following: The management of lands added to the Preserve since the original GMP in 1980; visitor use and resource management issues; access to and within the Preserve; and changes in land use patterns and their impact on natural and cultural resources in the Preserve.

A scoping newsletter will be prepared that describes the issues identified to date. Copies of the newsletter may be obtained in June from Todd Brindle, Superintendent, Big Thicket National Preserve, 6044 FM 420, Kountze, Texas 77625, Phone: 409–951–6802, the park Web site *http://www.nps.gov/bith,* or on the Planning, Environment, and Public Comment (PEPC) website at *http://parkplanning.nps.gov/bith*.

DATES: Any comments on the scope of issues to be addressed in the plan should be submitted no later than 180 days after publication of this notice. In addition to the newsletter, public meetings regarding the general management plan will be held during the scoping period. Specific dates, times, and locations will be made available in the local media, on the National Park Service Planning, Environment, and Public Comment (PEPC) Web site), or by contacting the Superintendent of Big Thicket National Preserve.

ADDRESSES: Information will be available for public review and comment online at *http://parkplanning.nps.gov/bith*, in the office of the Superintendent, Todd Brindle, 6044 FM 420, Kountze, Texas 77625, Phone: 409–951–6802.

FOR FURTHER INFORMATION CONTACT: Todd Brindle, Superintendent, 6044 FM 420, Kountze, Texas 77625, Phone: 409–951–6802 or by e-mail at *BITH_Superintendent@nps.gov*.

SUPPLEMENTARY INFORMATION: Public and agency involvement will be solicited at several key steps in the planning process including initial scoping, alternatives development, and the draft plan. If you wish to comment on any issues associated with the plan, you may submit your comments to the planning team by any one of several methods. You may mail comments to Big Thicket National Preserve, Office of the Superintendent, 6044 FM 420, Kountze, Texas 77625. You may also comment via the Internet at *http://parkplanning.nps.gov/bith*. Finally, you may hand deliver comments to the preserve headquarters at 6044 FM 420, Kountze, Texas 77625. Before including your address, phone number, e-mail address, or other personal identifying information in your comment, you should be aware that your entire comment—including your personal identifying information—may be made publicly available at any time. While you can ask us in your comment to withhold your personal identifying information from public review, we cannot guarantee that we will be able to do so. In personal identifying information from public review, we cannot guarantee that we will be able to do so. In addition, we will make all submissions from organizations or businesses, and from individuals identifying themselves as representatives or officials of organizations or businesses, available for public inspection in their entirety.

Dated: September 3, 2008.

Michael D. Snyder,

Director, Intermountain Region, National Park Service.

Editorial Note: This document was received in the Office of the Federal Register on January 9, 2009.

[FR Doc. E9–583 Filed 1–14–09; 8:45 am]

BILLING CODE 4312–CB–M

DEPARTMENT OF THE INTERIOR

Bureau of Reclamation

Grassland Bypass Project, 2010–2019, Fresno and Merced Counties, CA

AGENCY: Bureau of Reclamation, Interior.

ACTION: Notice of Availability and Notice of Public Hearing for the joint Draft Environmental Impact Statement/Environmental Impact Report (Draft EIS/EIR).

SUMMARY: The Bureau of Reclamation (Reclamation) is the National Environmental Policy Act (NEPA) Federal lead agency and the San Luis and Delta-Mendota Water Authority (Authority) is the California Environmental Quality Act (CEQA) State lead agency. Together, these agencies have made available for public review and comment the Draft EIS/EIR.

The joint Draft EIS/EIR evaluates the effects of continuing the Grassland Bypass Project until December 31, 2019 (Project). The actions analyzed in the Draft EIS/EIR include continued use of the Grassland Bypass Channel and a 28-mile segment of the San Luis Drain (Drain); continued discharges to Mud Slough until December 31, 2019; management of accumulated sediments within the Drain segment; ongoing use and development of areas utilized for application of subsurface drainage on salt tolerant crops; and programmatic consideration of future phases of the treatment and disposal program.

DATES: A public hearing will be held on Tuesday, February 10, 2009 from 1:30 to 3:30 p.m. to provide the public an opportunity to comment on the Draft EIS/EIR. Written comments will also be accepted at the public hearing.

Submit written comments on the Draft EIS/EIR on or before March 16, 2009.

ADDRESSES: The public hearing location is the San Luis & Delta-Mendota Water Authority, Boardroom, 842 Sixth Street, Suite 7, Los Banos, CA.

Written comments on the Draft EIS/EIR should be addressed to Ms. Judi Tapia, Bureau of Reclamation, 1243 'N' Street, Fresno, CA 93721–1831 or Mr. Joseph C. McGahan, Drainage Coordinator, San Luis & Delta-Mendota Water Authority, P.O. Box 2157, Los Banos, CA 93635, fax 209–826–9698, e-mail: *jmcgahan@summerseng.com.*

Copies of the draft document may be requested from Ms. Judi Tapia at the above address, by calling 559–487–5138, TDD 559–487–5933, or at *jtapia@mp.usbr.gov.* Copies may also be requested from Mr. Joseph C. McGahan, at the above address. The Draft EIS/EIR is also accessible from the following Web sites: *http://www.usbr.gov/mp/nepa/index.cfm.* See **SUPPLEMENTARY INFORMATION** section for locations where copies of the Draft EIS/EIR are available.

FOR FURTHER INFORMATION CONTACT: Ms. Judi Tapia, Bureau of Reclamation or Mr. Joseph C. McGahan, San Luis & Delta-Mendota Water Authority at the phone numbers or e-mail addresses above.

SUPPLEMENTARY INFORMATION: The Project and the Grassland Drainage Area are located in Merced and Fresno Counties in the Central Valley of California. Prior to 1996 when the interim project was implemented, subsurface agricultural drainage water was conveyed through channels used to deliver water to wetland habitat areas which limited Reclamation's ability to deliver fresh water to the wetlands. The Project now consolidates subsurface drainage flows on a regional basis (from the 97,400-acre Grassland Drainage Area), applies the drainage to salt tolerant crops to reduce the volume, utilizes a 4-mile channel to place it into the Drain at a point near Russell Avenue (Milepost 105.72, Check 19) and then utilizes a 28-mile segment of the Drain to convey the remaining drainage flows around wetland habitat areas and after which it is discharged to Mud Slough and subsequently reaches the San Joaquin River.

The original Grassland Bypass Project was implemented in November 1995 through an ''Agreement for Use of the San Luis Drain'' (Agreement No. 6–07–20–w1319) between Reclamation and the Authority. A Finding of No Significant Impact (FONSI No. 96–1–MP) was adopted by Reclamation for the original project, and environmental commitments set forth in the FONSI were made an integral component of the initial Use Agreement. The Use Agreement and its renewal in 1999 allowed for use of the Drain for a 5-year period that concluded September 30, 2001. A new Use Agreement (Agreement No. 01–WC–20–2075) was completed on September 28, 2001 for the period through December 31, 2009.

The original Grassland Bypass Project's use of the Drain was only authorized until December 31, 2009, and subsurface drainage flows discharged to Mud Slough (North) were to have met water quality objectives by October 1, 2010 as required by the Regional Water Quality Control Board, Central Valley Region's (CVRWQCB) 1998 Water Quality Control Plan (Basin Plan) for the Sacramento River and San Joaquin River Basins. However, delay in the acquisition of funding has delayed the development and availability of treatment and disposal technology to reduce selenium loads to meet that 2010 deadline. It is anticipated that the proposed extension would allow enough time to acquire funds and develop feasible treatment technology in order to meet the Basin Plan objectives and Waste Discharge Requirements.

In order to continue to discharge into Mud Slough (North) in the State's China Island Wildlife Area, the Authority would need to extend or amend a Memorandum of Understanding with the California Department of Fish and Game, Reclamation would need to extend the Use Agreement with the Authority for the continued use of the Drain after 2009, the CVRWQCB would need to revise their Basin Plan objectives for 2010 and amend the existing Waste Discharge Requirements in order to allow for anticipated drainage discharge into Mud Slough, and Reclamation and the Authority would need to remove existing and future sediments from the affected portion of the Drain.

The actions analyzed in the Draft EIS/EIR include continued use of the Grassland Bypass Channel and a 28-mile segment of the Drain; continued discharges to Mud Slough until December 31, 2019; management of accumulated sediments within that Drain segment; ongoing use and development of areas utilized for application of subsurface drainage on salt tolerant crops; and programmatic consideration of future phases of the treatment and disposal program. The Draft EIS/EIR considers the direct, indirect, and cumulative effects on the physical, natural, and human environment that may result from the Project actions above. The Draft EIS/EIR addresses potentially significant environmental issues and recommends adequate and feasible mitigation measures to reduce or eliminate significant environmental impacts, where possible. No project/no action alternative and one other action alternative are addressed.

Copies of the Draft EIS/EIR are available for public review at the following locations:

- Bureau of Reclamation, South-Central California Area Office, 1243 'N' Street, Fresno, CA 93721–1831
- U.S. Bureau of Reclamation, Mid-Pacific Regional Office Library, 2800 Cottage Way, Sacramento, CA 95825
- San Luis & Delta-Mendota Water Authority, 842 Sixth Street, Los Banos, CA 93635
- San Francisco Public Library, 100 Larkin Street, San Francisco, CA 94012

- University of California-Davis, Shields Library, Documents Department, 100 NW Quad University of California, Davis, CA 95616–5292
- Merced County Public Library, 1312 South 7th Street, Los Banos, CA 93635–4757
- Fresno County Public Library Government Publications, 2420 Mariposa Street, Fresno, CA 93721–2204
- Stanislaus County Library, 1500 I Street, Modesto, CA 95354
- Resources Agency Library, 1416 Ninth Street, Suite 117, Sacramento, CA 95814–5510
- California State Library, 914 Capitol Mall, Suite E–29, Sacramento, CA 95814–4802
- University of California, Berkeley, Water Resources Archive, 410 O'Brien Hall, Berkeley, CA 94720–1718

If special accommodation is required, please contact Susan Mussett at 209–826–9696 or *susan.mussett@sldmwa.org* by January 30, 2009 to enable the Authority to secure the needed services.

Before including your name, address, phone number, e-mail address, or other personal identifying information in your comment, you should be aware that your entire comment—including your personal identifying information—may be made publicly available at any time. While you can ask us in your comment to withhold your personal identifying information from public review, we cannot guarantee that we will be able to do so.

Dated: December 11, 2008.

John F. Davis,

Deputy Regional Director, Mid-Pacific Region.

[FR Doc. E9–723 Filed 1–14–09; 8:45 am]

BILLING CODE 4310–MN–P

INTERNATIONAL TRADE COMMISSION

[Investigation No. 731–TA–1012 (Review)]

Certain Frozen Fish Fillets From Vietnam

AGENCY: United States International Trade Commission.

ACTION: Scheduling of a full five-year review concerning the antidumping duty order on certain frozen fish fillets from Vietnam.

SUMMARY: The Commission hereby gives notice of the scheduling of a full review pursuant to section 751(c)(5) of the Tariff Act of 1930 (19 U.S.C. 1675(c)(5)) (the Act) to determine whether revocation of the antidumping duty order on certain frozen fish fillets from Vietnam would be likely to lead to continuation or recurrence of material injury within a reasonably foreseeable time. For further information concerning the conduct of this review and rules of general application, consult the Commission's Rules of Practice and Procedure, part 201, subparts A through E (19 CFR part 201), and part 207, subparts A, D, E, and F (19 CFR part 207).

DATES: *Effective Date:* January 9, 2009.

FOR FURTHER INFORMATION CONTACT: Russell Duncan (202–708–4727, *russell.duncan@usitc.gov*), Office of Investigations, U.S. International Trade Commission, 500 E Street, SW., Washington, DC 20436. Hearing-impaired persons can obtain information on this matter by contacting the Commission's TDD terminal on 202–205–1810. Persons with mobility impairments who will need special assistance in gaining access to the Commission should contact the Office of the Secretary at 202–205–2000. General information concerning the Commission may also be obtained by accessing its Internet server (*http://www.usitc.gov*). The public record for this review may be viewed on the Commission's electronic docket (EDIS) at *http://edis.usitc.gov.*

SUPPLEMENTARY INFORMATION:

Background.—On October 6, 2008, the Commission determined that responses to its notice of institution of the subject five-year review were such that a full review pursuant to section 751(c)(5) of the Act should proceed (73 FR 62318, Monday, October 20, 2008). A record of the Commissioners' votes, the Commission's statement on adequacy, and any individual Commissioner's statements are available from the Office of the Secretary and at the Commission's Web site.

Participation in the review and public service list.—Persons, including industrial users of the subject merchandise and, if the merchandise is sold at the retail level, representative consumer organizations, wishing to participate in this review as parties must file an entry of appearance with the Secretary to the Commission, as provided in section 201.11 of the Commission's rules, by 45 days after publication of this notice. A party that filed a notice of appearance following publication of the Commission's notice of institution of the review need not file an additional notice of appearance. The Secretary will maintain a public service list containing the names and addresses of all persons, or their representatives, who are parties to the review.

Limited disclosure of business proprietary information (BPI) under an administrative protective order (APO) and BPI service list.—Pursuant to section 207.7(a) of the Commission's rules, the Secretary will make BPI gathered in this review available to authorized applicants under the APO issued in the review, provided that the application is made by 45 days after publication of this notice. Authorized applicants must represent interested parties, as defined by 19 U.S.C. 1677(9), who are parties to the review. A party granted access to BPI following publication of the Commission's notice of institution of the review need not reapply for such access. A separate service list will be maintained by the Secretary for those parties authorized to receive BPI under the APO.

Staff report.—The prehearing staff report in the review will be placed in the nonpublic record on April 16, 2009, and a public version will be issued thereafter, pursuant to section 207.64 of the Commission's rules.

Hearing.—The Commission will hold a hearing in connection with the review beginning at 9:30 a.m. on May 6, 2009, at the U.S. International Trade Commission Building. Requests to appear at the hearing should be filed in writing with the Secretary to the Commission on or before May 1, 2009. A nonparty who has testimony that may aid the Commission's deliberations may request permission to present a short statement at the hearing. All parties and nonparties desiring to appear at the hearing and make oral presentations should attend a prehearing conference to be held at 9:30 a.m. on May 4, 2009, at the U.S. International Trade Commission Building. Oral testimony and written materials to be submitted at the public hearing are governed by sections 201.6(b)(2), 201.13(f), 207.24, and 207.66 of the Commission's rules. Parties must submit any request to present a portion of their hearing testimony *in camera* no later than 7 business days prior to the date of the hearing.

Written submissions.—Each party to the review may submit a prehearing brief to the Commission. Prehearing briefs must conform with the provisions of section 207.65 of the Commission's rules; the deadline for filing is April 27, 2009. Parties may also file written testimony in connection with their presentation at the hearing, as provided in section 207.24 of the Commission's rules, and posthearing briefs, which must conform with the provisions of section 207.67 of the Commission's rules. The deadline for filing posthearing briefs is May 15, 2009; witness testimony must be filed no later than two days before the hearing. In

addition, any person who has not entered an appearance as a party to the review may submit a written statement of information pertinent to the subject of the review on or before May 15, 2009. On June 8, 2009, the Commission will make available to parties all information on which they have not had an opportunity to comment. Parties may submit final comments on this information on or before June 10, 2009, but such final comments must not contain new factual information and must otherwise comply with section 207.68 of the Commission's rules. All written submissions must conform with the provisions of section 201.8 of the Commission's rules; any submissions that contain BPI must also conform with the requirements of sections 201.6, 207.3, and 207.7 of the Commission's rules. The Commission's rules do not authorize filing of submissions with the Secretary by facsimile or electronic means, except to the extent permitted by section 201.8 of the Commission's rules, as amended, 67 FR 68036 (November 8, 2002). Even where electronic filing of a document is permitted, certain documents must also be filed in paper form, as specified in II (C) of the Commission's Handbook on Electronic Filing Procedures, 67 FR 68168, 68173 (November 8, 2002).

Additional written submissions to the Commission, including requests pursuant to section 201.12 of the Commission's rules, shall not be accepted unless good cause is shown for accepting such submissions, or unless the submission is pursuant to a specific request by a Commissioner or Commission staff.

In accordance with sections 201.16(c) and 207.3 of the Commission's rules, each document filed by a party to the review must be served on all other parties to the review (as identified by either the public or BPI service list), and a certificate of service must be timely filed. The Secretary will not accept a document for filing without a certificate of service. *Authority:* This review is being conducted under authority of title VII of the Tariff Act of 1930; this notice is published pursuant to section 207.62 of the Commission's rules.

Issued: January 12, 2009.

By order of the Commission.

Marilyn R. Abbott,

Secretary to the Commission.

[FR Doc. E9–800 Filed 1–14–09; 8:45 am]

BILLING CODE 7020–02–P

DEPARTMENT OF JUSTICE

Notice of Lodging of Consent Decree Under the Comprehensive Environmental Response, Compensation, and Liability Act (CERCLA)

Notice is hereby given that on January 9, 2009, a proposed Consent Decree (Decree) in *United States* v. *Citibank Global Market Holdings, Inc.,* Civil Action No. 09–CV–4002–SAC, was lodged with the United States District Court for the District of Kansas.

In this action the United States, on behalf of the U.S. Environmental Protection Agency, sought to recover CERCLA response costs from Citibank Global Holdings, Inc. and U.S. Steel Corporation. The costs were incurred for the National Zinc Superfund Site (Site) in Cherryvale, Kansas. The Complaint alleges that Defendants are liable as successors to owners or operators of a smelter that was located and operated at the Site. The Decree would settle the government's claim for past response costs in return for a total payment of $1 million into the Hazardous Substances Superfund.

The Department of Justice will receive for a period of thirty (30) days from the date of this publication comments relating to the Decree. Comments should be addressed to the Assistant Attorney General, Environment and Natural Resources Division, and either e-mailed to *pubcomment-ees.enrd@usdoj.gov* or mailed to P.O. Box 7611, U.S. Department of Justice, Washington, DC 20044–7611, and should refer to *United States* v. *Citibank Global Market Holdings, Inc.,* D.J. Ref. 90–11–3–08705/1.

The Decree may be examined at the Office of the United States Attorney, 1200 Epic Center, 301 N. Main, Wichita, Kansas 67202. During the public comment period, the Decree, may also be examined on the following Department of Justice Web site, to *http://www.usdoj.gov/enrd/Consent_Decrees.html.* A copy of the Decree may also be obtained by mail from the Consent Decree Library, P.O. Box 7611, U.S. Department of Justice, Washington, DC 20044–7611 or by faxing or e-mailing a request to Tonia Fleetwood (*tonia.fleetwood@usdoj.gov*), fax no. (202) 514–0097, phone confirmation number (202) 514–1547. In requesting a copy from the Consent Decree Library, please enclose a check in the amount of $4.25 (25 cents per page reproduction cost) payable to the U.S. Treasury or, if by e-mail or fax, forward a check in that amount to the Consent Decree Library at the stated address.

Robert E. Maher, Jr.,

Assistant Chief, Environmental Enforcement Section, Environment and Natural Resources Division.

[FR Doc. E9–709 Filed 1–14–09; 8:45 am]

BILLING CODE 4410–15–P

DEPARTMENT OF JUSTICE

Bureau of Alcohol, Tobacco, Firearms and Explosives

[OMB Number 1140–0051]

Agency Information Collection Activities: Proposed Collection; Comments Requested

ACTION: 60-Day Notice of Information Collection Under Review: Certification of Secure Gun Storage or Safety Devices.

The Department of Justice (DOJ), Bureau of Alcohol, Tobacco, Firearms and Explosives (ATF), will be submitting the following information collection request to the Office of Management and Budget (OMB) for review and approval in accordance with the Paperwork Reduction Act of 1995. The proposed information collection is published to obtain comments from the public and affected agencies. Comments are encouraged and will be accepted for ''sixty days'' until March 16, 2009. This process is conducted in accordance with 5 CFR 1320.10.

If you have comments especially on the estimated public burden or associated response time, suggestions, or need a copy of the proposed information collection instrument with instructions or additional information, please contact Patricia Power, Chief, Federal Firearms Licensing Center, 244 Needy Road, Martinsburg, WV 25405.

Written comments and suggestions from the public and affected agencies concerning the proposed collection of information are encouraged. Your comments should address one or more of the following four points:

—Evaluate whether the proposed collection of information is necessary for the proper performance of the functions of the agency, including whether the information will have practical utility;

—Evaluate the accuracy of the agency's estimate of the burden of the proposed collection of information, including the validity of the methodology and assumptions used;

—Enhance the quality, utility, and clarity of the information to be collected; and

—Minimize the burden of the collection of information on those who are to respond, including through the use of appropriate automated, electronic, mechanical, or other technological collection techniques or other forms of information technology, e.g., permitting electronic submission of responses.

Overview of this information collection:

(1) *Type of Information Collection:* Extension of a currently approved collection.

(2) *Title of the Form/Collection:* Certification of Secure Gun Storage or Safety Devices.

(3) *Agency form number, if any, and the applicable component of the Department of Justice sponsoring the collection: Form Number:* ATF F 5300.42. Bureau of Alcohol, Tobacco, Firearms and Explosives.

(4) *Affected public who will be asked or required to respond, as well as a brief abstract: Primary:* Business or other for-profit. *Other:* None. The requested information will be used to ensure that applicants for a federal firearms license are in compliance with the requirements pertaining to the availability of secure gun storage or safety devices.

(5) *An estimate of the total number of respondents and the amount of time estimated for an average respondent to respond:* It is estimated that 61,641 respondents will complete a 1 minute form.

(6) *An estimate of the total public burden (in hours) associated with the collection:* There are an estimated 1,233 annual total burden hours associated with this collection.

If additional information is required contact: Lynn Bryant, Department Clearance Officer, Policy and Planning Staff, Justice Management Division, Department of Justice, Patrick Henry Building, Suite 1600, 601 D Street NW., Washington, DC 20530.

Dated: January 9, 2009.

Lynn Bryant,

Department Clearance Officer, PRA, United States Department of Justice.

[FR Doc. E9–737 Filed 1–14–09; 8:45 am]

BILLING CODE 4410–FY–P

DEPARTMENT OF JUSTICE

Drug Enforcement Administration

Importer of Controlled Substances; Notice of Registration

By Notice dated October 9, 2008, and published in the **Federal Register** on October 17, 2008 (73 FR 61908), Noramco Inc., 500 Swedes Landing Road, Wilmington, Delaware 19801–4417, made application by renewal to the Drug Enforcement Administration (DEA) to be registered as an importer of Opium, Raw (9600) and Concentrate of Poppy Straw (9670), basic classes of controlled substances listed in schedule II.

The company plans to import the listed controlled substances to manufacture other controlled substances.

No comments or objections have been received. DEA has considered the factors in 21 U.S.C. 823(a) and § 952(a) and determined that the registration of Noramco, Inc., to import the basic class of controlled substance is consistent with the public interest, and with United States obligations under international treaties, conventions, or protocols in effect on May 1, 1971, at this time. DEA has investigated Noramco, Inc., to ensure that the company's registration is consistent with the public interest. The investigation has included inspection and testing of the company's physical security systems, verification of the company's compliance with state and local laws, and a review of the company's background and history. Therefore, pursuant to 21 U.S.C. 952(a) and 958(a), and in accordance with 21 CFR 1301.34, the above named company is granted registration as an importer of the basic class of controlled substance listed.

Dated: January 9, 2009.

Joseph T. Rannazzisi,

Deputy Assistant Administrator, Office of Diversion Control, Drug Enforcement Administration.

[FR Doc. E9–773 Filed 1–14–09; 8:45 am]

BILLING CODE 4410–09–P

DEPARTMENT OF JUSTICE

Drug Enforcement Administration

Importer of Controlled Substances; Notice of Registration

By Notice dated October 9, 2008, and published in the **Federal Register** on October 17, 2008, (73 FR 61909), Formulation Technologies LLC., 11400 Burnet Road, Suite 4010, Austin, Texas 78758, made application by renewal to the Drug Enforcement Administration (DEA) to be registered as an importer of Fentanyl (9801), a basic class of controlled substance listed in schedule II.

The company plans to import the listed controlled substance for analytical characterization, secondary packaging, and/or for distribution to clinical trial sites.

No comments or objections have been received. DEA has considered the factors in 21 U.S.C. 823(a) and 952(a) and determined that the registration of Formulation Technologies LLC. to import the basic class of controlled substance is consistent with the public interest, and with United States obligations under international treaties, conventions, or protocols in effect on May 1, 1971, at this time. DEA has investigated Formulation Technologies LLC. to ensure that the company's registration is consistent with the public interest. The investigation has included inspection and testing of the company's physical security systems, verification of the company's compliance with state and local laws, and a review of the company's background and history. Therefore, pursuant to 21 U.S.C. 952(a) and 958(a), and in accordance with 21 CFR 1301.34, the above named company is granted registration as an importer of the basic class of controlled substance listed.

Dated: January 9, 2009.

Joseph T. Rannazzisi,

Deputy Assistant Administrator, Office of Diversion Control, Drug Enforcement Administration.

[FR Doc. E9–720 Filed 1–14–09; 8:45 am]

BILLING CODE 4410–09–P

DEPARTMENT OF JUSTICE

Drug Enforcement Administration

Importer of Controlled Substances; Notice of Registration

By Notice dated October 9, 2008, and published in the **Federal Register** on October 17, 2008, (73 FR 61908), Fisher Clinical Services, Inc., 7554 Schantz Road, Allentown, Pennsylvania 18106, made application by renewal to the Drug Enforcement Administration (DEA) to be registered as an importer of Noroxymorphone (9668), a basic class of controlled substance listed in schedule II.

The company plans to import the listed controlled substance for analytical research and clinical trials.

No comments or objections have been received. DEA has considered the factors in 21 U.S.C. 823(a) and 952(a) and determined that the registration of Fisher Clinical Services, Inc. to import the basic class of controlled substance is consistent with the public interest, and with United States obligations under international treaties, conventions, or protocols in effect on May 1, 1971, at this time. DEA has investigated Fisher

Clinical Services, Inc. to ensure that the company's registration is consistent with the public interest. The investigation has included inspection and testing of the company's physical security systems, verification of the company's compliance with state and local laws, and a review of the company's background and history. Therefore, pursuant to 21 U.S.C. 952(a) and 958(a), and in accordance with 21 CFR § 1301.34, the above named company is granted registration as an importer of the basic class of controlled substance listed.

Dated: January 9, 2009.

Joseph T. Rannazzisi,

Deputy Assistant Administrator, Office of Diversion Control, Drug Enforcement Administration.

[FR Doc. E9–731 Filed 1–14–09; 8:45 am]

BILLING CODE 4410–09–P

DEPARTMENT OF JUSTICE

Drug Enforcement Administration

Importer of Controlled Substances; Notice of Registration

By Notice dated October 6, 2008, and published in the **Federal Register** on October 14, 2008, (73 FR 60719), Hospira Inc., 1776 North Centennial Drive, McPherson, Kansas 67460–1247, made application by renewal to the Drug Enforcement Administration (DEA) to be registered as an importer of Remifentanil (9739), a basic class of controlled substance listed in schedule II.

The company plans to import Remifentanil for use in dosage form manufacturing.

No comments or objections have been received. DEA has considered the factors in 21 U.S.C. 823(a) and 952(a) and determined that the registration of Hospira, Inc. to import the basic class of controlled substance is consistent with the public interest, and with United States obligations under international treaties, conventions, or protocols in effect on May 1, 1971, at this time. DEA has investigated Hospira, Inc. to ensure that the company's registration is consistent with the public interest. The investigation has included inspection and testing of the company's physical security systems, verification of the company's compliance with state and local laws, and a review of the company's background and history. Therefore, pursuant to 21 U.S.C. 952(a) and 958(a), and in accordance with 21 CFR 1301.34, the above named company is granted registration as an importer of the basic class of controlled substance listed.

Dated: January 9, 2009.

Joseph T. Rannazzisi,

Deputy Assistant Administrator, Office of Diversion Control, Drug Enforcement Administration.

[FR Doc. E9–732 Filed 1–14–09; 8:45 am]

BILLING CODE 4410–09–P

DEPARTMENT OF JUSTICE

Drug Enforcement Administration

Importer of Controlled Substances; Notice of Registration

By Notice dated October 2, 2008, and published in the **Federal Register** on October 8, 2008, (73 FR 58979), Clinical Supplies Management, Inc., 342 42nd. Street, South Fargo, North Dakota 58103, made application by renewal to the Drug Enforcement Administration (DEA) to be registered as an importer of Sufentanil (9740), a basic class of controlled substance listed in schedule II.

The company plans to import the listed controlled substance for clinical trials, research, and analytical purposes.

No comments or objections have been received. DEA has considered the factors in 21 U.S.C. 823(a) and 952(a) and determined that the registration of Clinical Supplies Management, Inc. to import the basic class of controlled substance is consistent with the public interest, and with United States obligations under international treaties, conventions, or protocols in effect on May 1, 1971, at this time. DEA has investigated Clinical Supplies Management, Inc. to ensure that the company's registration is consistent with the public interest. The investigation has included inspection and testing of the company's physical security systems, verification of the company's compliance with state and local laws, and a review of the company's background and history. Therefore, pursuant to 21 U.S.C. 952(a) and 958(a), and in accordance with 21 CFR 1301.34, the above named company is granted registration as an importer of the basic class of controlled substance listed.

Dated: January 9, 2009.

Joseph T. Rannazzisi,

Deputy Assistant Administrator, Office of Diversion Control, Drug Enforcement Administration.

[FR Doc. E9–733 Filed 1–14–09; 8:45 am]

BILLING CODE 4410–09–P

DEPARTMENT OF JUSTICE

Drug Enforcement Administration

Manufacturer of Controlled Substances; Notice of Registration

By Notice dated October 2, 2008 and published in the **Federal Register** on October 8, 2008, (73 FR 58979), National Center for Natural Products Research—NIDA MProject, University of Mississippi, 135 Coy Waller Complex, University, Mississippi 38677, made application by renewal to the Drug Enforcement Administration (DEA) to be registered as a bulk manufacturer of the basic classes of controlled substances listed in schedule I:

Drug	Schedule
Marihuana (7360)	I
Tetrahydrocannabinols (7370)	I

The company plans to cultivate marihuana for the National Institute on Drug Abuse for research approved by the Department of Health and Human Services.

No comments or objections have been received. DEA has considered the factors in 21 U.S.C. 823(a) and determined that the registration of National Center for Natural Products Research—NIDA MProject to manufacture the listed basic classes of controlled substances is consistent with the public interest at this time. DEA has investigated National Center for Natural Products Research—NIDA MProject to ensure that the company's registration is consistent with the public interest. The investigation has included inspection and testing of the company's physical security systems, verification of the company's compliance with state and local laws, and a review of the company's background and history. Therefore, pursuant to 21 U.S.C. 823, and in accordance with 21 CFR 1301.33, the above named company is granted registration as a bulk manufacturer of the basic classes of controlled substances listed.

Dated: January 9, 2009.

Joseph T. Rannazzisi,

Deputy Assistant Administrator, Office of Diversion Control, Drug Enforcement Administration.

[FR Doc. E9–719 Filed 1–14–09; 8:45 am]

BILLING CODE 4410–09–P

DEPARTMENT OF JUSTICE

Drug Enforcement Administration

Manufacturer of Controlled Substances; Notice of Registration

By Notice dated September 18, 2008, and published in the **Federal Register** on September 26, 2008, (73 FR 55869), Mallinckrodt Inc., 3600 North Second Street, St. Louis, Missouri 63147, made application by letter to the Drug Enforcement Administration (DEA) to be registered as a bulk manufacturer of Oripavine (9330), a basic class of controlled substance listed in schedule II.

The company plans to use the above listed controlled substance as an intermediate in the manufacture of a non-controlled product.

No comments or objections have been received. DEA has considered the factors in 21 U.S.C. 823(a) and determined that the registration of Mallinckrodt Inc. to manufacture the listed basic class of controlled substance is consistent with the public interest at this time. DEA has investigated Mallinckrodt Inc. to ensure that the company's registration is consistent with the public interest. The investigation has included inspection and testing of the company's physical security systems, verification of the company's compliance with state and local laws, and a review of the company's background and history. Therefore, pursuant to 21 U.S.C. 823, and in accordance with 21 CFR 1301.33, the above named company is granted registration as a bulk manufacturer of the basic class of controlled substance listed.

Dated: January 9, 2009.

Joseph T. Rannazzisi,

Deputy Assistant Administrator, Office of Diversion Control, Drug Enforcement Administration.

[FR Doc. E9–730 Filed 1–14–09; 8:45 am]

BILLING CODE 4410–09–P

DEPARTMENT OF JUSTICE

Foreign Claims Settlement Commission

[OMB Number 1105–NEW]

Agency Information Collection Activities: Proposed Collection; Comments Requested

ACTION: 60-Day Emergency Notice of Information Collection Under Review: Filing of Information Requesting Compensation for Settled Physical Injury Claims Against the Government of Libya and Referred to the Foreign Claims Settlement Commission by the Department of State.

The Department of Justice, Foreign Claims Settlement Commission (Commission), will be submitting the following information collection request to the Office of Management and Budget (OMB) for review and clearance in accordance with emergency review procedures of the Paperwork Reduction Act of 1995. OMB approval has been requested by February 18, 2009. The proposed information collection is published to obtain comments from the public and affected agencies. If granted, the emergency approval is only valid for 180 days. Comments should be directed to OMB, Office of Information and Regulation Affairs, *Attention:* Department of Justice Desk Officer, Washington, DC 20503. Comments are encouraged and will be accepted for 60 days until March 16, 2009.

During the first 60 days of this same review period, a regular review of this information collection is also being undertaken. All comments and suggestions, or questions regarding additional information, including obtaining a copy of the proposed information collection instrument with instructions, should be directed to Judith Lock, Foreign Claims Settlement Commission, Department of Justice, 600 E Street, NW., Suite 6002, Washington DC 20579, or by facsimile (202) 616–6993.

Written comments and suggestions from the public and affected agencies concerning the proposed collection of information are encouraged. Your comments should address one or more of the following four points:

—Evaluate whether the proposed collection of information is necessary for the proper performance of the functions of the agency, including whether the information will have practical utility;

—Evaluate the accuracy of the agency's estimate of the burden of the proposed collection of information, including the validity of the methodology and assumptions used;

—Enhance the quality, utility, and clarity of the information to be collected; and

—Minimize the burden of the collection of information on those who are to respond, including through the use of appropriate automated, electronic, mechanical, or other technological collection techniques or other forms of information technology, e.g., permitting electronic submission of responses.

Overview of this information:

(1) *Type of information collection:* New Collection.

(2) *The title of the form/collection:* Claims of U.S. Nationals Against Libya.

(3) *The agency form number, if any, and the applicable component of the department sponsoring the collection: Form Number:* FCSC 1–08. Foreign Claims Settlement Commission, Department of Justice.

(4) *Affected public who will be asked or required to respond, as well as a brief abstract: Primary:* Individuals. *Other:* None. Information will be used as a basis for determining eligibility of U.S. nationals with physical injury claims for awards payable by the Department of Treasury out of funds provided pursuant to the U.S.-Libya Claims Settlement Agreement for certain terrorism-related claims against Libya, its agencies and instrumentalities, and officials and employees thereof, and referred to the Commission by the Department of State.

(5) *An estimate of the total number of respondents and the amount of time estimated for an average respondent to respond/reply:* It is estimated that 100 respondents will complete the application in approximately two hours.

(6) *An estimate of the total public burden (in hours) associated with the collection:* The estimated total annual public burden associated with this application is 200 hours.

If additional information is required contact: Lynn Bryant, Department Clearance Officer, United States Department of Justice, Justice Management Division, Policy and Planning Staff, Patrick Henry Building, Suite 1600, 601 D Street, NW., Washington, DC 20530.

Dated: January 9, 2009.

Lynn Bryant,

Department Clearance Officer, PRA, United States Department of Justice.

[FR Doc. E9–738 Filed 1–14–09; 8:45 am]

BILLING CODE 4410–BA–P

DEPARTMENT OF LABOR

Employment and Training Administration

Advancing Registered Apprenticeship into the 21st Century: Collaborating For Success; Solicitation for Grant Applications

Announcement Type: New Notice of solicitation for grant applications.

Funding Opportunity Number: SGA/DFA PY 08–11.

Catalog of Federal Domestic Assistance CFDA Number: 17.201.

Key Dates: The closing date for receipt of application under this announcement is 60 days from the date of publication in the **Federal Register**.

SUMMARY: The U.S. Department of Labor, Employment and Training Administration (ETA), announces the availability of approximately $6.5 million for 10–20 grants to promote the adoption of the 21st century Registered Apprenticeship framework established by the Final Rule published on October 29, 2008 (73 FR 64402), promulgating revised 20 CFR Part 29, Labor Standards for the Registration of Apprenticeship Programs. The grants will fund the development and/or adaptation of national guideline standards that incorporate competency-based progression; hybrid-style progression; and/or interim credentials. Funds are also available to train staff, apprenticeship instructors and members on the 21st century Registered Apprenticeship framework and on the development of standards that utilize the elements of the 21st century Registered Apprenticeship framework as established by the Final Rule. National industry and employer associations, labor-management organizations and other organizations that demonstrate the capacity to advance registered apprenticeship through the development of new or modified apprenticeship standards using the elements of the 21st century Registered Apprenticeship framework are eligible to apply for grant funds.

To be considered for an award, grant applications must incorporate at least four of the following seven components:

1. Continued expansion into fast growing and/or new and emerging industries (including construction).

2. Development of new or modified programs or guideline standards that utilize competency-based (see Part VIII—Section 2—Key Definitions) or hybrid training models (see Part VIII—Section 2—Key Definitions).

3. Use of interim credentialing to acknowledge the skills an apprentice attains during training.

4. Adoption of Technology-Based Learning strategies for related instruction.

5. Strategic partnerships with the Office of Apprenticeship (OA), State Apprenticeship Agencies (SAA), and the public workforce investment system.

6. Innovative strategies to serve under-represented populations, particularly youth and women, to meet the talent development needs of regional economies through Registered Apprenticeship.

7. Innovative Partnerships with Education (Secondary and Post-Secondary) and other key stakeholders.

Allowable activities may include developing new or modifying existing standards for apprenticeship programs (including national guideline standards), developing curricula to support these standards; using technology-based learning strategies; developing skill assessment tools for competency-based models; training and education to take advantage of the opportunities outlined in the new regulatory requirements; and conducting outreach and training efforts to educate members, affiliates, staff and partners on the new model.

All applicants must develop or modify at least one national guideline standard with at least four programs and train a minimum of 100 apprentices in the new model. Additionally, all applicants must demonstrate that they have the ability and expertise to develop the new framework and the capacity to provide training to their membership. This expertise and capacity can be demonstrated by the individual applicant or through partnership with other organizations.

ETA recognizes that the use of these approaches will offer apprentices greater opportunities to increase their knowledge and attain the skills that emerging and high growth industries demand. Additionally, the use of interim credentialing and competency-based models will ensure that apprentices receive recognition for the skills and competencies they have attained during and prior to completion of a traditional time-based program. ETA believes that expanding the use of these Apprenticeship models will increase the ability of apprenticeship programs to meet the needs of industries that require more flexibility in training a worker for the required level of proficiency and expertise.

ADDRESSES: To apply by mail, please submit one (1) blue-ink signed, typewritten original of the application and two (2) signed photocopies in one package to the U.S. Department of Labor, Employment and Training Administration, Division of Federal Assistance, Attention: Mamie Williams, Reference SGA/DFA PY 08–11, 200 Constitution Avenue, NW., Room N–4716, Washington, DC 20210. Information about applying online through *http://www.grants.gov* can be found in Section IV.B(3) of this document. Applicants are advised that mail delivery in the Washington area may be delayed due to mail decontamination procedures. Hand delivered proposals will be received at the above address.

SUPPLEMENTARY INFORMATION: The Registered Apprenticeship system is administered by the Employment and Training Administration's (ETA) Office of Apprenticeship (OA) in partnership with State Apprenticeship Agencies (SAA), and is an important strategy to prepare workers for successful careers. It is a significant postsecondary education, training and employment option available nationwide, driven by the needs of businesses and industries. Registered Apprenticeship trains workers for high-skilled, high-wage careers, with an employer satisfaction rate of 85 percent. Registered Apprenticeship has more than 29,000 programs, 250,000 employers and 468,000 apprentices—predominantly in high-growth industries. Industries, employer associations, and labor-management organizations, which sponsor most of the Registered Apprenticeship programs, are particularly well situated to help OA implement the Final Rule and advance Registered Apprenticeship into the 21st century.

The intent of this solicitation is to promote the 21st century Registered Apprenticeship framework as outlined in the new regulations within existing national organizations, their affiliates and members which have Registered Apprenticeship programs. The primary focus is making funds available to develop new or adapt existing national guideline standards to include competency-based models, hybrid models (combination of time and competency-based models) and/or interim credentials. Funds are also available to train staff, apprenticeship instructors and members on this new framework and on the new standards that will be developed.

This solicitation provides background information on the Advancing Apprenticeship Initiative and critical elements required of projects funded under the solicitation. It also describes the application submission requirements, the process that eligible applicants must use to apply for funds covered by this solicitation, and how grantees will be selected. This announcement consists of seven parts:

- Part I provides background information on Registered Apprenticeship.
- Part II describes the size and nature of the anticipated awards.
- Part III describes the qualifications of an eligible applicant.
- Part IV provides information on the application and submission process.

- Part V explains the review process and rating criteria that will be used to evaluate applications.
- Part VI provides award administration information.
- Part VII contains ETA contact information.
- Part VIII contains 'Veterans Priority' information and key definitions that may be referenced within this notice.

Part I. Funding Opportunity Description

Background

Registered Apprenticeship programs offer employment and a combination of on-the-job learning and related technical and theoretical instruction. Apprentices are employed at the start of their apprenticeship and work through a series of defined curricula until the completion of their apprenticeship programs. The duration of training, and the skills and competencies required for mastery, are driven by the needs of businesses and industries. Traditional apprenticeship programs require a specific number of hours of on-the-job learning. While this model is successful and preferred in certain industries, increasingly, new and high-growth industries are establishing competency-based and hybrid (competency and time-based) apprenticeship strategies that focus on the mastery of key skills and allow motivated workers to progress at their own pace. Currently, the Registered Apprenticeship system approves time-based, competency-based, and a hybrid of time- and competency-based programs, and provides technical assistance to help industries develop interim credentials.

Interim credentials earned through Registered Apprenticeship programs, and issued by the Department's Office of Apprenticeship as certificates of training, are increasingly recognized nationwide as portable industry credentials. The primary and ultimate apprentice certification is a Certificate of Completion of Apprenticeship, which is awarded at the end of the apprenticeship. Many apprenticeship programs—particularly in high-growth industries such as health care, advanced manufacturing and transportation—now also offer interim credentials and training certificates based on a competency model that leads to a Certificate of Completion. There may be beginning, intermediate, advanced, and specialty certification levels. Registered Apprenticeship programs are flexible to also allow credit for previous apprenticeship-related experience. In addition, interim credentials are recognized by the publicly-funded workforce investment system.

Increased flexibility and additional options will help advance Registered Apprenticeship in all industries that require employees to adapt quickly to changing skill needs and technology advances driven by demand and competition in a 21st century global economy. These additional options will further enable Registered Apprenticeship to meet the needs of sponsors and apprentices and facilitate partnerships with and the leveraging of workforce and education system resources.

In order to ensure that Registered Apprenticeship is integrated into service delivery strategies for businesses and the workforce, it is critical to support collaboration between the Registered Apprenticeship infrastructure, national industry and/or employer associations, labor management organizations, and other organizations that demonstrate the capacity to advance registered apprenticeship through the development of new or modified apprenticeship standards using the elements of the 21st century Registered Apprenticeship framework. These stakeholders are uniquely positioned to integrate Registered Apprenticeship into business engagement strategies by encouraging the development of new apprenticeship programs. National industry and/or employer associations, national labor-management and/or other national organizations can leverage the unique capacity of OA and SAA apprenticeship staff to provide technical assistance for prospective or existing programs. These national groups can also enhance strategic regional development by integrating innovative approaches to registered apprenticeship into their talent development with their local affiliates.

Part II. Award Information

1. Award Amount

ETA anticipates awarding between 10 to 20 grants with funding identified for each of three major ETA activities outlined below. Funding will be awarded to help National industry and employer associations, labor-management organizations and other apprenticeship partners and stakeholders carry out one or more of the following project activities/components:

A. Implementation:

To develop and/or modify new or existing Registered Apprenticeship standards that utilize the elements of the proposed new Registered Apprenticeship framework and implement the new model in at least four sites with a minimum total of 100 apprentices. Up to $500,000 in funding will be awarded to each grantee under this component. The amount of funding requested should be appropriate to conduct the activities needed to reach the project goals under this component.

B. Training & Outreach:

Train members and staff on the elements of the proposed new Registered Apprenticeship framework. Training should be focused on preparing members and staff to implement apprenticeship models that utilize a minimum of four of the seven components described in the introductory summary of this grant solicitation. Up to $150,000 in funding will be awarded to each grantee under this component. The amount of funding requested should be appropriate to conduct the activities needed to reach the project goals under this component.

C. Training, Outreach, and Implementation:

This option is a combination of A and B. Up to $650,000 in funding will be awarded to each grantee (up to $500,000 for implementation and up to $150,000 for training and outreach). The amount of funding requested should be appropriate to conduct the activities needed to reach the project goals under this component.

Applicants must provide a detailed explanation of the activities they propose to conduct under each funding component for which they apply, and detail the funding amount requested for each component. Applications will be scored solely on the criteria for the category (A, B, or C) chosen. For example; an application that seeks funding to accomplish the goals identified under the Implementation component will be evaluated based on the Implementation criteria only, while an application submitted under Option C will be evaluated under a set of combined criteria (see Part V of this notice for more details). Proposals will be grouped by the category for which they apply, and the proposals within each category will be rated separately. Applying for only one component of funding will not affect scoring of applications and will not reduce an applicant's ability to be funded. No category has preference over one of the others.

ETA reserves the right to fund grants at either a lower or higher amount, or fund a smaller or larger number of projects based on the type and the number of quality submissions.

2. Use of Funds

Grants awarded under this solicitation are to be used to develop partnerships of public and private entities to promote the 21st Century Registered Apprenticeship framework. Partnerships should include representatives of business or business-related non-profit organizations, education and training providers, which may include community colleges or other community-based organizations, and the public workforce system. Eligible entities have the opportunity to collaborate with OA and SAA staff to advance their Registered Apprenticeship standards and programs. In addition, eligible entities can collaborate with other partners to:

(1) Write new or modify existing standards that utilize competency-based and/or hybrid (competency/time-based) models, and/or interim credentials, technology-based learning, or other elements of a 21st century Registered Apprenticeship framework; and

(2) Conduct outreach activities to train and prepare members and/or staff on the implementation of such models. Optional partners may include educational institutions, or other community and/or workforce organizations as appropriate.

Pursuant to Section V, applications will be scored on the extent to which applicants describe strategies for working in partnerships as described above.

As provided below, these funds will be awarded to develop programs that provide job training and related assistance designed to assist employed and unemployed workers in gaining the skills and competencies needed to obtain or upgrade career ladder employment positions in the occupations and industries for which employers are using H–1B visas to hire foreign workers. Funds may also be used to enhance the provision of job training services and information, such as the development of curricula and program models, to build core competencies and train workers. **Note:** See Attachment 1 to this notice for a list of the ''H–1B Industry Sectors and Occupations''.

Activities funded under this solicitation must support the advancement of Registered Apprenticeship by national industry and/or employer associations, national labor-management organizations, and other national organizations that demonstrate the capacity to advance registered apprenticeship through the development of new or modified apprenticeship standards using the elements of the 21st century Registered Apprenticeship framework.

Activities to be conducted under these options may include:

Implementation

A. Developing new or modified standards that utilize a minimum of four elements of the 21st century approach to preparing workers. (The seven elements of this approach are outlined in the introductory summary of this document.) **Note:** Applicants must pilot the new model in at least four programs and train a minimum of 100 apprentices total or 25 apprentices in the new model at each site.

B. Developing new or modified curriculum;

C. Provide on-the-job training geared towards skills assessment;

D. Developing a skills assessment tool for competency-based models (if applicable);

E. Partnering with the Registration Agency, and/or the public workforce system, and/or secondary and post-secondary educational entities;

F. Use of technology-based learning such as on-line discussions or simulations;

G. Develop programs and training utilizing competency-based, and/or hybrid (competency/time-based) models, and/or interim credentials.

Training and Outreach

A. Training approximately 10 affiliates and/or 100–150 members and staff on the implementation of apprenticeship standards that utilize the new regulatory framework governing the National Apprenticeship system;

B. Training apprenticeship instructors on new requirements;

C. Conducting outreach to members, staff, partners, and affiliated sites on apprenticeship standards that utilize elements of this framework.

Implementation, Training & Outreach

A. Train approximately 10 affiliates and/or 100–150 members and staff on the implementation of apprenticeship standards that utilize the new regulatory framework governing the National Apprenticeship system;

B. Train apprenticeship instructors on new requirements;

C. Conduct outreach to members, staff, partners, and affiliated sites on apprenticeship standards that utilize elements of this framework.

D. Develop new or modify existing standards that utilize a minimum of four elements of the 21st century approach to preparing workers. (The seven elements of this approach are outlined in the introductory summary of this document.) **Note:** Applicants must pilot the new model for one national guideline standard or in at least four programs and train a minimum of 100 apprentices total or 25 apprentices in the new model at each site.

E. Develop new or modify existing curriculum;

F. Provide on-the-job training geared towards skills assessment;

G. Develop a skills assessment tool for competency-based models (if applicable);

H. Partner with OA, SAA, and/or the public workforce system, and/or secondary and post-secondary educational entities;

I. Use of technology-based learning such as on-line learning, simulations, etc.;

J. Develop programs and training utilizing competency-based, and/or hybrid (competency/time-based) models, and/or interim credentials.

3. Cost Sharing

Cost sharing or matching funds are not required as a condition for application, but leveraged resources are strongly encouraged and failure to commit and integrate leveraged resources into the project may have a significant impact on an applicant's ability to successfully compete for grant funds. As described in Part V, applications will be scored based on the quality and the degree to which the source and use of leveraged funds are clearly explained, and the extent to which they are integrated into the project in support of grant outcomes.

4. Period of Performance

The period of performance will be 24 months from the date of execution of the grant documents.

ETA may approve a request for a no-cost extension to grantees for an additional period of time based on the success of the project and other relevant factors.

5. Funding Restrictions

Determinations of allowable costs will be made in accordance with the applicable federal cost principles. Disallowed costs are those charges to a grant that the grantor agency or its representative determines not to be allowed in accordance with the applicable federal cost principles or other conditions contained in the grant. Applicants will not be entitled to reimbursement of pre-award costs.

Indirect Costs. As specified in the Office of Management and Budget (OMB) Circular Cost Principles, indirect costs are those that have been incurred for common or joint objectives and

cannot be readily identified with a particular cost objective. An indirect cost rate (ICR) is required when an organization operates under more than one grant or other activity whether federally-assisted or not. Organizations must use the ICR supplied by the relevant federal agency, in this case, ETA. If an organization requires a new ICR or has a pending ICR, the Grant Officer will award a temporary billing rate for 90 days until a provisional rate can be issued. This rate is based on the fact that an organization has not established an ICR agreement. Within this 90-day period, the organization must submit an acceptable indirect cost proposal to their Federal cognizant agency to obtain a provisional ICR.

Administrative Costs. An entity that receives a grant under this solicitation may not use more than 10 percent of the amount of the grant to pay administrative costs associated with the program or project. Administrative costs, which could be both direct and indirect costs, are specified at 20 CFR 667.220. Administrative costs do not need to be identified separately from program costs on the Standard Form 424A Budget Information Form. Administrative costs should be discussed in the budget narrative and tracked through the grantee's accounting system. To claim any administrative costs that are also indirect costs, the applicant must obtain an indirect cost rate agreement from its Federal cognizant agency as specified above.

Salary and Bonus Limitations. None of the funds appropriated in Public Law 109–149, Public Law 110–5, or prior Acts under the heading ''Employment and Training'' that are available for expenditure on or after June 15, 2006, shall be used by a recipient or sub-recipient of such funds to pay the salary and bonuses of an individual, either as direct costs or indirect costs, at a rate in excess of Executive Level II, except as provided for under section 101 of Public Law 109–149. This limitation shall not apply to vendors providing goods and services as defined in OMB Circular A–133. See Training and Employment Guidance Letter number 5–06 for further clarification: *http://wdr.doleta.gov/directives/corr_doc.cfm?DOCN=2262*

Legal Rules Pertaining to Inherently Religious Activities by Organizations that Receive Federal Financial Assistance. Direct Federal grants, sub-awards, or contracts under this program must not be used to support inherently religious activities such as religious instruction, worship, or proselytizing. Therefore, organizations must take steps to separate, in time or location, their inherently religious activities from the services supported with DOL financial assistance under this program. Neutral, secular criteria that neither favor nor disfavor religion must be employed in the selection of grant and sub-grant recipients. In addition, under the Workforce Investment Act of 1998 and DOL regulations implementing the Workforce Investment Act, a recipient may not use direct Federal assistance to train a participant in religious activities, or employ participants to construct, operate, or maintain any part of a facility that is used or to be used for religious instruction or worship. See 29 CFR 37.6(f). Under WIA, ''no individual shall be excluded from participation in, denied the benefits of, subjected to discrimination under, or denied employment in the administration of or in connection with, any such program or activity because of race, color, religion, sex (except as otherwise permitted under Title IX of the Education Amendments of 1972 and the Religious Freedom Restoration Act of 1993), national origin, age, disability, or political affiliation or belief.'' Regulations pertaining to the Equal Treatment for Faith-Based Organizations, which includes the prohibition against supporting inherently religious activities with direct DOL financial assistance, can be found at 29 CFR Part 2, Subpart D. Provisions relating to the use of indirect support (such as vouchers) are at 29 CFR 2.33(c) and 20 CFR 667.266.

A faith-based organization receiving federal financial assistance retains its independence from Federal, State, and local governments, and may continue to carry out its mission, including the definition, practice, and expression of its religious beliefs. For example, a faith-based organization may use space in its facilities to provide secular programs or services supported with Federal financial assistance without removing religious art, icons, scriptures, or other religious symbols. In addition, a faith-based organization that receives Federal financial assistance retains its authority over its internal governance, and it may retain religious terms in its organization's name, select its board members on a religious basis, and include religious references in its organization's mission statements and other governing documents in accordance with all program requirements, statutes, and other applicable requirements governing the conduct of DOL funded activities.

The Department notes that the Religious Freedom Restoration Act (RFRA), 42 U.S.C. 2000bb, applies to all Federal law and its implementation. If your organization is a faith-based organization that makes hiring decisions on the basis of religious belief, it may be entitled to receive Federal financial assistance under Title I of the Workforce Investment Act and maintain that hiring practice even though Section 188 of the Workforce Investment Act contains a general ban on religious discrimination in employment. If you are awarded a grant, you will be provided with information on how to request such an exemption.

Faith-based and community organizations may reference ''Transforming Partnerships: How to Apply the U.S. Department of Labor's Equal Treatment and Religion-Related Regulations to Public-Private Partnerships'' at: *http://www.workforce3one.org/public/_shared/detail.cfm?id=5566&simple=false.*

Intellectual Property Rights. The Federal Government reserves a paid-up, nonexclusive and irrevocable license to reproduce, publish or otherwise use, and to authorize others to use for federal purposes: (i) The copyright in all products developed under the grant, including a subgrant or contract under the grant or subgrant; and (ii) any rights to copyright to which the grantee, subgrantee or a contractor purchases ownership under an award (including but not limited to curricula, training models, technical assistance products, and any related materials). Such uses include, but are not limited to, the right to modify and distribute such products worldwide by any means, electronically or otherwise. Federal funds may not be used to pay any royalty or licensing fee associated with such copyrighted material, although they may be used to pay costs for obtaining a copy which is limited to the developer/seller costs of copying and shipping.

If revenues are generated through selling products developed with grant funds, including intellectual property, these revenues are program income. Program income is added to the grant and must be expended for allowable grant activities.

Part III. Eligibility Information

Under this announcement, eligible applicants include the following entities:

A. National Industry Associations that demonstrate the capacity to advance registered apprenticeship through the development of new or modified apprenticeship standards using the elements of the 21st century Registered Apprenticeship framework;

B. National Employer Associations that demonstrate the capacity to advance registered apprenticeship

through the development of new or modified apprenticeship standards using the elements of the 21st century Registered Apprenticeship framework;

C. National Labor-Management Organizations that demonstrate the capacity to advance registered apprenticeship through the development of new or modified apprenticeship standards using the elements of the 21st century Registered Apprenticeship framework; and

D. Other National Organizations that demonstrate the capacity to advance registered apprenticeship through the development of new or modified apprenticeship standards using the elements of the 21st century Registered Apprenticeship framework.

Part IV. Application and Submission Information

1. Address To Request Application Package

This announcement includes all information and forms needed to apply for this funding opportunity.

2. Content and Form of Application Submission

The proposal must consist of two separate and distinct parts, Parts I and II. Applications that fail to adhere to the instructions in this section will be considered non-responsive and may not be given further consideration.

A. Part I is the Cost Proposal and must include the following three items:

• The Standard Form (SF) 424, ''Application for Federal Assistance'' (available at *http://www07.grants.gov/agencies/approved_standard_forms.jsp*). The SF–424 must clearly identify the applicant and be signed by an individual with authority to enter into a grant agreement. Upon confirmation of an award, the individual signing the SF 424 on behalf of the applicant shall be considered the representative of the applicant. On line 12 of the SF 424, applicants must also indicate the component (from Part II: Award Information—Section 1—Award Amount: A. Implementation; B. Training & Outreach; C. Training, Outreach & Implementation) for which they are applying for funds under this notice. Applicants that fail to indicate the component for which they are applying for funds under this notice will be deemed non-responsive by DOL and the application will not be accepted for award consideration.

• Dun and Bradstreet (DUNS) number. All applicants for Federal grant and funding opportunities are required to have a DUNS number. See OMB Notice of Final Policy Issuance, 68 FR 38402 (June 27, 2003). Applicants must supply their DUNS number on the SF–424. The DUNS number is a nine-digit identification number that uniquely identifies business entities. Obtaining a DUNS number is easy and there is no charge. To obtain a DUNS number, access this Web site: *http://www.dnb.com/us/* or call 1–866–705–5711.

• The SF–424–A Budget Information Form (available at: *http://www07.grants.gov/agencies/approved_standard_forms.jsp*). In preparing the Budget Information Form, the applicant must provide a concise narrative explanation to support the request. The budget narrative should break down the budget and leveraged resources by the activities specified in the technical proposal. The narrative should also discuss precisely how the administrative costs support the project goals.

Applicants that fail to provide a SF–424, SF–424–A and/or a budget narrative will be removed from consideration prior to the technical review process. Leveraged resources should not be listed on the SF–424 or SF–424–A Budget Information Form, but must be described in the budget narrative and in Part II of the proposal. The amount of Federal funding requested for the entire period of performance must be shown on the SF–424 and SF–424–A Budget Information Form. Applicants are also encouraged, but not required, to submit OMB control number 1890–0014: Survey on Ensuring Equal Opportunity for Applicants, which can be found at: *http://www.doleta.gov/grants/find_grants.cfm*.

B. Part II is the technical proposal. The following information is required as part of the technical proposal:

• A table of contents listing the application sections.

• A 2–3 page abstract summarizing the proposed project and applicant profile information including: (1) Applicant name; (2) project title; (3) overview of strategies; (4) partnership members; and (5) requested funding level.

• A timeline outlining project activities.

The technical proposal of the application demonstrates the applicant's capabilities to fulfill the intention of the SGA. The Technical Proposal is limited to 10 double-spaced, single-sided, 8.5-inch-by-11-inch pages with 12-point font and 1-inch margins. Please note that the budget, the abstract, and the timeline are not included in the 10-page limit (See Below). In addition to the technical proposal, the applicant may provide resumes, a staffing pattern, statistical information, letters of support, and related materials in attachments. The applicant must reference any participating entities in the text of the Technical Proposal. Applications that do not meet these requirements will not be considered.

Applications may be submitted electronically on *www.grants.gov* or in hard-copy via U.S. mail, professional delivery service, or hand delivery. These processes are described in further detail in Section IV(3). Applicants submitting proposals in hard-copy must submit an original signed application (including the SF 424) and one (1) ''copy-ready'' version free of bindings, staples or protruding tabs to ease in the reproduction of the proposal by DOL. Applicants submitting proposals in hard-copy are also requested, though not required, to provide an electronic copy of the proposal on CD–ROM.

3. Submission Dates and Times

The closing date for receipt of applications under this announcement is March 16, 2009. Applications must be received at the address below no later than 5 p.m. (Eastern Time). Applications submitted electronically through Grants.gov, must be successfully submitted at *http://www.grants.gov* no later than 5:00:00 p.m. (Eastern Time) March 16, 2009, and then subsequently validated by Grants.gov. The submission and validation process is described in more detail below. The process can be complicated and time-consuming. Applicants are strongly advised to initiate the process as soon as possible and to plan for time to resolve technical problems if necessary.

Applications sent by e-mail, telegram, or facsimile (fax) will not be accepted.

If an application is submitted by both hard-copy and through *www.grants.gov* a letter must accompany the hard-copy application stating why two applications were submitted and the differences between the two submissions. If no letter accompanies the hard-copy we will review the copy submitted through *www.grants.gov.* For multiple applications submitted through *www.grants.gov* we will review the latest submittal.

Applications that do not meet the conditions set forth in this notice will not be honored. No exceptions to the mailing and delivery requirements set forth in this notice will be granted.

Mail/overnight mail/hand delivery—To apply by mail, please submit one (1) blue-ink signed, typewritten original of the application and two (2) signed photocopies in one package to the U.S. Department of Labor, Employment and Training Administration, Division of

Federal Assistance, Attention: Mamie Williams, Reference SGA/DFA PY 08–11, 200 Constitution Avenue, NW., Room N–4716, Washington, DC 20210. Information about applying online through *www.grants.gov* can be found in Section IV.B of this document. Applicants are advised that mail delivery in the Washington area may be delayed due to mail decontamination procedures. Hand delivered proposals will be received at the above address.

Electronic submission—Applicants may apply online through Grants.gov (*http://www.grants.gov*). It is strongly recommended that before the applicant begins to write the proposal, applicants should immediately initiate and complete the ''Get Registered'' registration steps at *http://www.grants.gov/applicants/get_registered.jsp*. These steps may take multiple days or weeks to complete, and this time should be factored into plans for electronic submission in order to avoid unexpected delays that could result in the rejection of an application. It is highly recommended that applicants use the ''Organization Registration Checklist'' at *http://www.grants.gov/assets/Organization_Steps_Complete_Registration.pdf* to ensure the registration process is complete.

Within two business days of application submission, Grants.gov will send the applicant two email messages to provide the status of application progress through the system. The first email, almost immediate, will confirm receipt of the application by Grants.gov. The second email will indicate the application has either been successfully validated or has been rejected due to errors. Only applications that have been successfully submitted and successfully validated will be considered. It is the sole responsibility of the applicant to ensure a timely submission, therefore sufficient time should be allotted for submission (two business days), and if applicable, subsequent time to address errors and receive validation upon resubmission (an additional two business days for each ensuing submission). It is important to note that if sufficient time is not allotted and a rejection notice is received after the due date and time, the application will not be considered.

The components of the application must be saved as either .doc, .xls or .pdf files. Documents received in a format other than .doc, .xls or .pdf will not be read.

The Grants.gov helpdesk is available from 7 a.m. (Eastern Time) until 9 p.m. (Eastern Time). Applicants should factor the unavailability of the Grants.gov helpdesk after 9 p.m. (Eastern Time) into plans for submitting an application. Applicants are strongly advised to utilize the plethora of tools and documents, including FAQs, that are available on the ''Applicant Resources'' page at *http://www.grants.gov/applicants/app_help_reso.jsp#faqs*. To receive updated information about critical issues, new tips for users and other time sensitive updates as information is available, applicants may subscribe to ''Grants.gov Updates'' at *http://www.grants.gov/applicants/email_subscription_signup.jsp*.

If applicants encounter a problem with Grants.gov and do not find an answer in any of the other resources, call 1–800–518–4726 to speak to a Customer Support Representative or email *support@grants.gov*.

Late Applications: For applications submitted on Grants.gov, only applications that have been successfully submitted no later than 5:00:00 p.m. (Eastern Time) on the closing date and successfully validated will be considered. For applicants not submitting on Grants.gov, any application received after the exact date and time specified for receipt at the office designated in this notice will not be considered, unless it is received before awards are made, was properly addressed, and: (a) Was sent by U.S. Postal Service registered or certified mail not later than the fifth calendar day before the date specified for receipt of applications (e.g., an application required to be received by the 20th of the month must be postmarked by the 15th of that month) or (b) was sent by professional overnight delivery service to the addressee not later than one working day prior to the date specified for receipt of applications. ''Postmarked'' means a printed, stamped or otherwise placed impression (exclusive of a postage meter machine impression) that is readily identifiable, without further action, as having been supplied or affixed on the date of mailing by an employee of the U.S. Postal Service. Therefore, applicants should request the postal clerk to place a legible hand cancellation ''bull's eye'' postmark on both the receipt and the package. Failure to adhere to the above instructions will be a basis for a determination of non-responsiveness. Evidence of timely submission by a professional overnight delivery service must be demonstrated by equally reliable evidence created by the delivery service provider indicating the time and place of receipt.

4. Funding Restrictions

Determinations of allowable costs will be made in accordance with the applicable Federal cost principles as indicated in Part VI(2). Disallowed costs are those charges to a grant that the grantor agency or its representative determines not to be allowed in accordance with the applicable Federal cost principles or other conditions contained in the grant.

5. Withdrawal of Applications

Applications may be withdrawn by written notice or telegram (including Mailgram) received at any time before an award is made. Applications may be withdrawn in person by the applicant or by an authorized representative thereof, if the representative's identity is made known and the representative signs a receipt for the proposal.

6. Intergovernmental Review

This funding opportunity is not subject to Executive Order (EO) 12372, ''Intergovernmental Review of Federal Programs.''

Part V. Application Review Information

1. Evaluation Criteria

This section identifies and describes the criteria that will be used to evaluate the proposals for the Advancing Apprenticeship Initiative. The factors on which the proposals will be evaluated are delineated in the same order as the criterion is listed under each component. The factors follow the evaluation criteria for each component.

Implementation

1. How do you plan to develop new program standards or to revise existing standards? Describe the occupation(s) for which you have utilized, or will utilize competency-based and/or hybrid (competency/time-based) models, interim credentials, technology-based learning, or other elements of a 21st century Registered Apprenticeship framework. (15 points)

2. How you plan to work with the Registration Agency (OA or the recognized SAA) to develop new program standards or revise existing standards. What experience have you had working with a Registration Agency to develop, revise or implement program standards? (10 points)

3. How will you develop new or modify training curricula to implement the competency-based and hybrid models for apprenticeship? (10 points)

4. How will you measure the development of On-the-Job-Learning (OJL) skills? How will you determine the amount of OJL time needed for an apprentice to demonstrate competency in particular skills? How will you track apprentices' progression through competency-based or hybrid model

apprenticeships? Please describe what tool/s will be developed and how they will be implemented. (10 points)

5. Describe how you will work with your members and affiliates to establish and operate at least four programs, with enrollment of at least 25 apprentices, that utilize the competency-based or hybrid model and provide for issuance of interim credentials. (10 points)

6. How many new programs (at least four) will you develop? How will you determine the occupations for which you are developing and implementing new programs? (10 points)

7. How will you recruit and train the new apprentices in competency-based and hybrid programs (minimum of 25 at each location or a total of 100 apprentices)? (10 points)

8. To what extent will other resources be available to carry out activities; and how will these new programs be sustained during and beyond the period of performance under the grant? (15 points)

9. Describe how you will work in partnership with any other industry, employer or labor-management organization, the public workforce system, or educational institutions. Please describe each group's role. (5 points)

10. Describe how you will use technology-based learning to help apprentices learn. (5 points)

The score for each of the factors delineated under this component will be evaluated on:

- The extent to which the applicant describes plans to develop training programs that will be targeted for development of standards that utilize the 21st century Registered Apprenticeship framework. Responses should include information on the studies and research used to identify to identify the programs to be developed for standard development.
- The extent to which the applicant describes plans to work with the registration agency and describes the level of experience the applicant has in working with the registration agency to develop, revise or implement apprenticeship program standards.
- The extent to which the applicant describes plans to develop new, or modify existing, training curricula to establish and implement competency-based and hybrid models for apprenticeship. Responses should include a detailed explanation of how the curricula to be developed will assist users in advancing through apprenticeships that utilize competency-based and hybrid models which result in the issuance of interim credentials.
- The ability of the applicant to identify what evaluation measures and/or tools will be used to determine the amount of On-the-Job-Learning time needed to demonstrate competency in particular skills to track progression of Apprentices through competency-based or hybrid model apprenticeships.
- The extent to which the applicant describes plans to collaborate with its members and affiliates to establish and operate programs that utilize competency-based or hybrid model apprenticeship programs. Responses should describe how strategies will be shared with members and affiliates and how the strategies support collaborations that result in successful development of programs that utilize the 21st century Registered Apprenticeship framework.
- The extent to which the applicant can identify and describe the new programs (minimum of four) to be developed and describe the research and/or studies used or developed to determine the occupations it will identify for development and implementation of new training programs for apprentices (industry growth statistics, regional or local employment growth statistics, applicant experience in a specific occupational training, etc).
- How thoroughly the applicant describes the strategies to be used to recruit and train new apprentices in competency-based and hybrid programs. Responses should include identification and explanation of the strategies and how they will lead to the successful recruitment and training of apprentices.
- The nature and quality of leveraged resources and the extent to which the resources will support grant activities; and the extent to which the applicant can identify and describe the strategies to be used for sustainment of new programs beyond the period of performance of the grant. Responses should provide evidence that key partners have expressed a clear commitment to providing resources to the project, and an explanation of how the strategies will increase the ability of the applicant to continue to successfully sustain the program without additional grant funds.
- The extent to which the applicant identifies and describes strategies for working with other industry, employer, or labor-management organizations, the public workforce system, and educational institutions to develop, or modify existing programs to develop, revise or implement apprenticeship program standards. Responses should identify who the applicant plans to partner with, the applicant and partner's roles and responsibilities, and how the partnerships will lead to the successful development or modification of programs.
- The extent to which the applicant identifies and describes what technology-based learning tools will be used to help apprentices learn. Responses should describe how the technology-based learning will be used to help apprentices learn through the use of competency-based and hybrid models that lead to the issuance of interim credentials.

Training and Outreach

1. Please describe who will you train and/or who will be the focus of your outreach. (15 points)

2. What curriculum and/or tools will be developed and how will they be incorporated into your training and/or outreach? (20 points)

3. Describe strategies for conducting outreach to expand and promote implementation of competency-based and hybrid model apprenticeship programs, as well as interim credentials by your membership and industry. (15 points)

4. Describe strategies for training your membership and staff on the new model. (15 points)

5. How will this new training framework be sustained? (15 points)

6. How will you work in partnership with any other industry, employer or labor-management organization, the public workforce system, or educational institutions and if so, who and how. Please describe each group's role. (5 points)

7. Describe how you will use technology-based learning to prepare staff and/or members to develop and implement training programs that utilize competency-based and/or hybrid models. (5 points)

8. How do you plan to evaluate the effectiveness of training and outreach efforts to identify whether the activities are successful in expanding the use of the 21st century Registered Apprenticeship framework (*e.g.* surveys, member questionnaires, other identifiable evaluation factors)? (10 points)

The score for each of the factors delineated under this component will be evaluated on:

- The ability of the applicant to identify who will be targeted for training on the 21st Registered Apprenticeship framework and/or targeted for outreach to promote the use of the 21st century Registered Apprenticeship framework. Responses should describe how those targeted for training and outreach will assist in the

development of programs that utilize the 21st century Registered Apprenticeship framework.

• The extent to which the applicant can describe the course materials and or learning tools that will be developed and how they will be used for training and outreach on the 21st century Registered Apprenticeship framework.

• The extent to which the applicant can identify and describe the strategies to be used to promote the use of elements of the 21st century Registered Apprenticeship framework, specifically the use of competency-based models and hybrid models, by applicant members and industry partners and/or affiliates. Responses should include an explanation of why the outreach strategies will lead to increased use of competency-based and hybrid models programs that lead to the issuance of interim credentials.

• The extent to which the applicant can identify and describe the strategies to be used to train its members and/or staff on the elements of the 21st century Registered Apprenticeship model. Responses should include explanation of how the strategies will prepare applicant's members and/or staff to develop and/or modify programs to utilize competency-based and hybrid models that lead to the issuance of interim credentials.

• The nature and quality of leveraged resources and the extent to which the resources will support grant activities; and the extent to which the applicant can identify and describe the strategies to be used for sustainment of new programs beyond the period of performance of the grant. Responses should provide evidence that key partners have expressed a clear commitment to providing resources to the project, and an explanation of how the strategies will increase the ability of the applicant to continue to successfully sustain the program without additional grant funds.

• The extent to which the applicant identifies and describes strategies for working with other industry, employer, or labor-management organizations, the public workforce system, and educational institutions to develop, or modify existing training programs to prepare its staff and/or members to develop, revise or implement apprenticeship program standards that utilize competency-based and hybrid models. Responses should identify who the applicant plans to partner with, the applicant and partner's roles and responsibilities, and how the partnerships will lead to the successful training of staff and/or members on the development or modification of programs that utilize the 21st century Registered Apprenticeship framework.

• The extent to which the applicant identifies and describes what technology-based learning tools will be used to help train its members and/or staff to develop, revise or implement apprenticeship program standards that utilize competency-based and hybrid models.

• The ability of the applicant to identify what evaluation measures and/or tools will be used to determine the effectiveness of training and/or outreach to its staff, members and partners on the development or modification of apprenticeship programs that utilize competency-based or hybrid models.

Implementation, Training and Outreach

1. How do you plan to develop new program standards or to revise existing standards? Describe the occupation(s) for which you have utilized, or will utilize competency-based and/or hybrid (competency/time-based) models, interim credentials, technology-based learning, or other elements of a 21st century Registered Apprenticeship framework. (10 points)

2. How you plan to work with the Registration Agency (OA or the recognized SAA) to develop new program standards or revise existing standards. What experience have you had working with a Registration Agency to develop, revise or implement program standards? (10 points)

3. How will you develop new or modify training curricula to implement the competency-based and hybrid models for apprenticeship? (10 points)

4. How will you develop On-the-Job-Learning (OJL) skills assessments and how will you track apprentices' progression? Please describe what tool/s will be developed and how they will be incorporated into the new learning model. (10 points)

5. How will you recruit and train the new apprentices under the new model (minimum of 25 at each location or a total of 100 apprentices)? Describe how you will work with your members and affiliates to implement the new standards in at least four locations with a minimum of 25 apprentices at each site or a grand total of 100 apprentices. (10 points)

6. Who will you train and/or will be the focus your outreach and or staff training? (5 points)

7. Please describe what curriculum and/or tool/s will be developed and how they will be incorporated into the new learning model. (15 points)

8. Describe strategies for conducting outreach to expand and promote implementation of the new model to your membership and industry. (5 points)

9. How will this new training framework be sustained? (5 points)

10. Will you work in partnership with any other industry, employer or labor-management organization, the public workforce system, or educational institutions and if so, who and how? Please describe each group's role. (5 points)

11. Describe how you will use technology-based learning to help apprentices learn. (5 points)

12. How do you plan to evaluate the effectiveness of training and outreach efforts to identify whether the activities are successful in expanding the use of the 21st century Registered Apprenticeship framework (*e.g.* surveys, member questionnaire's, other identifiable evaluation factors). (10 points)

The score for each of the factors delineated under this component will be evaluated on:

• The extent to which the applicant describes plans to develop training programs that will be targeted for development of standards that utilize the 21st century Registered Apprenticeship framework. Responses should include information on the studies and research used to identify the programs to be developed for standard development.

• The extent to which the applicant describes plans to work with the registration agency and describes the level of experience the applicant has in working with the registration agency to develop, revise or implement apprenticeship program standards

• The extent to which the applicant describes plans to develop new, or modify existing, training curricula to establish and implement competency-based and hybrid models for apprenticeship. Responses should include a detailed explanation of how the curricula to be developed will assist users in advancing through apprenticeships that utilize competency-based and hybrid models which result in the issuance of interim credentials.

• The ability of the applicant to identify what evaluation measures and/or tools will be used to determine the amount of On-the-Job-Learning time needed to demonstrate competency in particular skills to track progression of Apprentices through competency-based or hybrid model apprenticeships.

• How thoroughly the applicant describes the strategies to be used to work with the applicant's members, affiliates, other industries and/or to recruit and train a minimum of 100 new

apprentices in a minimum of four competency-based and hybrid programs. Responses should include identification and explanation of the strategies and how they will lead to the successful recruitment and training of apprentices.

- The ability of the applicant to identify who will be targeted for training on the 21st Registered Apprenticeship framework and/or targeted for outreach to promote the use of the 21st century Registered Apprenticeship framework. Responses should describe how those targeted for training and outreach will assist in the development of programs that utilize the 21st century Registered Apprenticeship framework.
- The extent to which the applicant can describe the course materials and or learning tools that will be developed and how they will be used for training and outreach on the 21st century Registered Apprenticeship framework.
- The extent to which the applicant can identify and describe the strategies to be used to train its members and/or staff on the elements of the 21st century Registered Apprenticeship model. Responses should include explanation of how the strategies will prepare applicant's members and/or staff to develop and/or modify programs to utilize competency-based and hybrid models that lead to the issuance of interim credentials.
- The nature and quality of leveraged resources and the extent to which the resources will support grant activities; and the extent to which the applicant can identify and describe the strategies to be used for sustainment of new programs beyond the period of performance of the grant. Responses should provide evidence that key partners have expressed a clear commitment to providing resources to the project, and an explanation of how the strategies will increase the ability of the applicant to continue to successfully sustain the program without additional grant funds.
- The extent to which the applicant identifies and describes strategies for working with other industry, employer, or labor-management organizations, the public workforce system, and educational institutions to develop, or modify existing training programs to prepare its staff and/or members to develop, revise or implement apprenticeship program standards that utilize competency-based and hybrid models. Responses should identify who the applicant plans to partner with, the applicant and partner's roles and responsibilities, and how the partnerships will lead to the successful training of staff and/or members on the development or modification of programs that utilize the 21st century Registered Apprenticeship framework.
- The extent to which the applicant identifies and describes what technology-based learning tools will be used to help apprentices learn. Responses should describe how the technology-based learning will be used to help apprentices learn through the use of competency-based and hybrid models that lead to the issuance of interim credentials.
- The ability of the applicant to identify what evaluation measures and/or tools will be used to determine the effectiveness of training and/or outreach to its staff, members and partners on the development or modification of apprenticeship programs that utilize competency-based or hybrid models

Review and Selection Process

A review panel will carefully evaluate applications against the rating criteria described in Part V (1), which are based on the policy goals, priorities, and emphases set forth in this SGA. Up to 100 points may be awarded to an application, based on the Rating Criteria described in Part V(1).

Proposals will be grouped by the category for which they apply, and the proposals within each category will be rated separately. The ranked scores will serve as the primary basis for selection of applications for funding, in conjunction with other factors such as the availability of funds; and proposals that are most advantageous to the government. The panel results are advisory in nature and not binding on the grant Officer, who may consider any information that comes to his attention including information provided by OA; the availability of funds; and what is most advantageous to the government, in making award determinations. The Government will consider applications with a score of 80 or above to be eligible for a grant award. Applicants that score less than 80 will not be eligible for a grant award. If no fundable proposals are received for a given category, additional awards may be made in the other categories. The government reserves the right to award grants with or without discussions or negotiations with applicants. Should a grant be awarded without negotiations, the award will be based on the applicant's signature on the SF–424, which constitutes a binding offer.

The government reserves the right to award grants with or without discussions or negotiations with applicants. Should a grant be awarded without negotiations, the award will be based on the applicant's signature on the SF–424, which constitutes a binding offer.

Part VI. Award Administrative Information

1. Award Notices

All award notifications will be posted on the ETA Web site at: *http://www.doleta.gov/grants/find_grants.cfm*. Applicants selected for award will be contacted directly before the grant's execution. Applicants not selected for award will be notified by mail as soon as possible.

Note: Selection of an organization as a grantee does not constitute approval of the grant application as submitted. Before the actual grant is awarded, ETA may enter into negotiations about such items as program components, staffing, and administrative systems in place to support grant implementation. If negotiations do not result in a mutually acceptable submission, the Grant Officer reserves the right to terminate the negotiation and decline to fund the application.

2. Administrative and National Policy Requirements—Administrative Program Requirements

All grantees will be subject to all applicable Federal laws (including provisions in appropriations law), regulations, and the applicable Office of Management and Budget (OMB) Circulars. The applicants selected under the SGA will be subject to the following administrative standards and provisions, if applicable:

- 29 CFR Part 29—Labor Standards for the Registration of Apprenticeship Programs
- 29 CFR Part 29—Apprenticeship Programs, Labor Standards for Registration, Amendment of Regulations; Final Rule.
- Workforce Investment Act—20 Code of Federal Regulations (CFR) Part 667 Subpart B (Administrative Rules, Costs and Limitations) and Subpart H (Administrative Adjudication and Judicial Review).
- Non-Profit Organizations—2 CFR Part 230 (Cost Principles, formerly Office of Management and Budget (OMB) Circular A–122) and 29 CFR Part 95 (Administrative Requirements).
- Educational Institutions—2 CFR Part 220 (Cost Principles, formerly OMB Circular A–21) and 29 CFR part 95 (Administrative Requirements).
- State and Local Governments—2 CFR Part 225 (Cost Principles, formerly OMB circular A–87) and 29 CFR Part 97 (Administrative Requirements).
- All entities must comply with 29 CFR Parts 93 and 98, and where applicable, 29 CFR Parts 96 and 99.

• In accordance with Section 18 of the Lobbying Disclosure Act of 1995, Public Law 104–65 (2 U.S.C. 1611), non-profit entities incorporated under Internal Revenue Code Section 501(c)(4) that engage in lobbying activities will not be eligible for the receipt of Federal funds and grants.

• 29 CFR Part 2, subpart D—Equal Treatment in Department of Labor Programs for Religious Organizations; Protection of Religious Liberty of Department of Labor Social Service Providers and Beneficiaries.

• 29 CFR Part 30—Equal Employment Opportunity in Apprenticeship and Training.

• 29 CFR Part 31—Nondiscrimination in Federally Assisted Programs of the Department of Labor—Effectuation of Title VI of the Civil Rights Act of 1964.

• 29 CFR Part 32—Nondiscrimination on the Basis of Handicap in Programs and Activities Receiving or Benefiting from Federal Financial Assistance.

• 29 CFR Part 33—Enforcement of Nondiscrimination on the Basis of Handicap in Programs or Activities Conducted by the Department of Labor.

• 29 CFR Part 35—Nondiscrimination on the Basis of Age in Programs or Activities Receiving Federal Financial Assistance from the Department of Labor.

• 29 CFR Part 36—Nondiscrimination on the Basis of Sex in Education Programs or Activities Receiving Federal Financial Assistance.

• 29 CFR Part 37—Implementation of the Nondiscrimination and Equal Opportunity Provisions of the Workforce Investment Act of 1998 (WIA).

(Note: Except as specifically provided in this notice, ETA's acceptance of a proposal and award of Federal funds to sponsor any program(s) does not provide a waiver of any grant requirements and/or procedures. For example, the OMB Circulars require that an entity's procurement procedures must ensure that all procurement transactions are conducted, as practical, to provide full and open competition. If a proposal identifies a specific entity to provide services, the ETA award does not provide the justification or basis to sole-source the procurement, i.e., avoid competition.)

3. Reporting Requirements

As a condition of participation in the grant program, applicants will be required to submit periodic reports such as the Quarterly Financial Reports, Progress Reports and Final Reports as follows:

Quarterly Financial Reports. A Quarterly Financial Status Report (ETA 9130)/OMB Approval No. 1205–0461 is required until such time as all funds have been expended and/or the grant period has expired. Quarterly financial reports are due 45 days after the end of each calendar year quarter. Grantees must use ETA's Online Electronic Reporting System.

Quarterly Progress Reports. The grantee must submit a quarterly Performance Progress Report, SF-PPR/OMB Approval Number: 0970–0443 to the designated Federal Project Officer within 45 days after the end of each calendar year quarter. Two copies are to be submitted providing a detailed account of activities undertaken during that quarter. ETA may require additional data elements to be collected and reported on either a regular basis or special request basis. Please see Part V (1) of this SGA for the types of data elements ETA will require for quarterly submission. Applicants must agree to meet ETA's reporting requirements in order to become a grantee.

The quarterly progress report must be in narrative form and must include:

1. A comparison of actual accomplishments with the goals and objectives established for the period. This must include discussion of placements in apprenticeships, giving the name and address of each workplace and company involved.

2. Reasons why established goals were not met, if appropriate.

3. Any problems that may impede the performance of the grant and corrective action proposed or taken.

4. Any changes in the proposed work to be performed during the next reporting period.

In addition, between scheduled reporting dates, the grantee(s) must immediately inform the Office of Apprenticeship of significant developments affecting the ability to accomplish the goals of the project.

Final Report. A draft final report must be submitted no later than 60 days prior to the expiration date of the grant. This report must summarize activities, employment outcomes, and related results. After responding to ETA's questions and comments on the draft report, three copies of the final report must be submitted no later than the grant expiration date.

Part VII. Agency Contacts

For further information regarding this SGA, please contact Mamie Williams, Grants Management Specialist, (202) 693–3341. Any questions regarding this SGA should be faxed to (202) 693–2879 (not a toll-free number). You must specifically address your fax to the attention of Mamie Williams and should include the following information: SGA/DFA PY 08–11, a contact name, fax, and telephone number.

Part VIII. Other Information

1. Veterans Priority

The Jobs for Veterans Act (Pub. L. 107–288) provides priority of service to veterans and spouses of certain veterans for the receipt of employment, training, and placement services in any job training program directly funded, in whole, or in part, by the U.S. Department of Labor. In circumstances where a 'Advancing Registered Apprenticeship into the 21st Century' grant recipient must choose between two equally qualified candidates for training, one of whom is a veteran, the Jobs for Veterans Act requires that 'Advancing Registered Apprenticeship into the 21st Century' grant recipients give the veteran priority of service by admitting him or her into the program. Please note that, to obtain priority of service, a veteran must meet the program's eligibility requirement. ETA Training and Employment guidance Letter (TEGL) No. 5–03 (September 16, 2003) provides guidance on the scope of the Jobs for Veterans Act and its effect on current employment and training programs. TEGL No. 5–03, along with additional guidance, is available at the ''Jobs for Veterans Priority of Service'' Web site (*http;//www.doleta.gov/programs/vets*). The Department published a Notice of Proposed Rulemaking to implement Veterans Priority in August 2008 (73 FR 48086 (Aug. 15, 2008)).

2. Key Definitions

Certificate of Completion of Apprenticeship: The Certificate of Completion of Apprenticeship issued by the Registration Agency to those registered apprentices certified and documented as successfully completing the apprentice training requirements outlined in the Standards of Apprenticeship.

Competency-Based Model: Competency/performance-based apprenticeship occupations are premised on attainment of demonstrated, observable and measurable competencies and skills in lieu of meeting time-based work experience. Work processes are designed to include all the skills needed to attain competencies and how the mentor/journey worker will assess the apprentices. Therefore, work process schedules and related instruction outlines must specify approximate time of completion or attainment of each competency, which can be applied toward the 2,000-hour minimum

requirement (competencies demonstrated not withstanding and assuming no credit for previous experience). In competency/performance-based occupations, apprentices may accelerate the rate of competency achievement or take additional time beyond the approximate time of completion or attainment due the open entry and exit design.

Hybrid Model: In addition to time-based occupations which have a fixed set time for completion and competency/performance-based occupations, a third alternative has evolved which, in effect, is a ''hybrid'' of the two types of occupations previously mentioned. This third type of training method is basically a combination of time and performance considerations whereby work processes are developed with a minimum time/hours for each task or job requirement.

Interim Credential: Interim Credential means a credential issued by the Registration Agency, upon request of the appropriate sponsor, as certification of competency attainment by an apprentice. Competency means the attainment of manual or technical skills and knowledge, as specified by an occupational standard. Program sponsors shall identify and define all interim credentials that they choose to utilize. Interim credentials can only be issued for recognized components of an apprenticeable occupation as identified by an appropriate job task analysis.

Technology-Based Learning (TBL): Can be defined as the learning of content via all-electronic technology, including the Internet, intranets, satellite broadcasts, audio and video tape, video and audio conference, Internet conferencing, chat rooms, bulletin boards, Web casts, computer-based instruction, and CD-ROM. It encompasses related terms, such as online learning, Web-based learning, computer-based learning, and e-learning.

Time-Based Model: The traditional Registered Apprenticeship model is time-based with a minimum requirement of 2,000 hours of on-the-job learning and 144 hours of related instruction. The majority of apprenticeship programs use this model.

OMB Information Collection No. 1225–0086.

Expires: September 30, 2009.

According to the Paperwork Reduction Act of 1995, no persons are required to respond to a collection of information unless such collection displays a valid OMB control number. Public reporting burden for this collection of information is estimated to average 20 hours per response, including time for reviewing instructions, searching existing data sources, gathering and maintaining the data needed, and completing and reviewing the collection of information. Send comments regarding the burden estimated or any other aspect of this collection of information, including suggestions for reducing this burden, to the OMB Desk Officer for ETA, Office of Management and Budget, Room 10235, Washington DC 20503. Please do not return the completed application to the OMB. Send it to the sponsoring agency as specified in this solicitation. This information is being collected for the purpose of awarding a grant. The information collected through this ''Solicitation for Grant Applications'' will be used by the Department of Labor to ensure that grants are awarded to the applicants best suited to perform the functions of the grant. Submission of this information is required in order for the applicant to be considered for award of this grant. Unless otherwise specifically noted in this announcement, information submitted in the respondent's application is not considered to be confidential.

Signed at Washington, DC, this 9th day of January 2009.

Chari Magruder,

Grant Officer, Employment and Training Administration.

Attachment 1 to SGA/DFA PY 08–11-Advancing Registered Apprenticeship into the 21st Century: Collaborating for Success

H–1B Industry Sectors and Occupations—Industry Sectors:

Information Technology

Computer Systems Design and Related Services
Software Development/Software Publishers
Data Processing Services
Information Services
Telecommunications
Scientific Research and Development Services (including Biotechnology)
Scientific and Technical Consulting (including Biotechnology)
Architecture, Engineering, Surveying
Specialized Design Services

Construction/Skilled Trades

Finance, Insurance and Real Estate and Administrative Support Services

Accounting, Tax Preparation, Bookkeeping & Payroll Services
Financial Investment
Securities & Commodity Brokerage/Contracts
Business Support Services
Insurance Carriers, Agencies, Brokerages, and Insurance and Employee Benefit Funds
Credit Intermediation

Advanced Manufacturing

Semiconductor and Other Electronic Component Manufacturing
Computer, Electronic Product, and Peripheral Equipment Manufacturing
Pharmaceutical and Medicine Manufacturing
Communications Equipment Manufacturing
Navigational, Measuring, Electromedical, and Control Instruments Manufacturing
Industrial Machinery Manufacturing
Aerospace Manufacturing
Chemical and Petrochemical Manufacturing
Motor Vehicle and Parts Manufacturing
Medical Equipment and Supplies Manufacturing
Metalworking Manufacturing
Food Manufacturing
Other Miscellaneous Manufacturing
Automotive Repair/Maintenance

Health Care

General Medical and Surgical Hospitals and Other Hospitals
Offices of Physicians
Offices of Dentists
Offices of Other Health Practitioners
Medical and Diagnostic Laboratories
Nursing and Residential Care Facilities
Home Health Care Services

Energy

Electric Power Generation, Transmission, and Distribution
Oil & Gas Extraction, Refining, and Production
Mining and Support Activities for Mining
Pipeline Transportation

Transportation

Air Transportation
Freight and Truck Transportation
Water Transportation
Transportation Support

Cross-Cutting Occupations

Computer Related Occupations

Systems Analysis and Programming
Data Communications and Networks
Computer Systems Technical Support
Computer Systems User Support

Engineering and Related Technical Occupations

Aeronautical
Electrical
Civil
Ceramic
Mechanical
Chemical

Mining and Petroleum
Metallurgy and Metallurgical
Industrial
Agricultural
Marine
Nuclear
Drafters
Surveying/Cartographic
Architectural.

Occupations in Mathematics and Physical Sciences

Mathematics
Astronomy
Chemistry
Physics
Geology
Meteorology

Occupations in Life Sciences

Agricultural Sciences
Biological Sciences

Occupations in Medicine and Health

Physicians/Surgeons
Osteopaths
Dentists
Veterinarians
Pharmacists
Registered Nurses
Therapists
Dieticians
Medical and Dental Technology
Other Health Care Practitioners

Occupations in Financial and Administrative Fields

Accountants/Auditors

Bookkeepers/Payroll Services
Budget and Management Systems Analysis
Finance, Insurance, and Real Estate Management
Purchasing Managers
Agents/Appraisers

Technology Related Occupations

Process Technicians.
Mechanics/Mechanical Engineering Technicians 43

[FR Doc. E9–653 Filed 1–14–09; 8:45 am]

BILLING CODE 4510–FT–P

DEPARTMENT OF LABOR

Employment and Training Administration

[TA–W–64,020]

American Multimedia, Inc., Burlington, NC; Notice of Affirmative Determination Regarding Application for Reconsideration

By application dated January 6, 2008, the petitioner requested administrative reconsideration of the negative determination regarding workers' eligibility to apply for Trade Adjustment Assistance (TAA) and Alternative Trade Adjustment Assistance (ATAA) applicable to workers and former workers of the subject firm. The determination was issued on December 17, 2008. The Notice of Determination will soon be published in the **Federal Register**.

The initial investigation resulted in a negative determination based on the finding that imports of replicated CD's, VHS, DVD's, and cassette tapes did not contribute importantly to worker separations at the subject firm and no shift of production to a foreign source occurred.

In the request for reconsideration, the petitioner provided additional information regarding the customers of the subject firm and alleged that the customers might have increased imports of CD's, VHS, DVD's, and cassette tapes.

The Department has carefully reviewed the request for reconsideration and the existing record and has determined that the Department will conduct further investigation to determine if the workers meet the eligibility requirements of the Trade Act of 1974.

Conclusion

After careful review of the application, I conclude that the claim is of sufficient weight to justify reconsideration of the U.S. Department of Labor's prior decision. The application is, therefore, granted.

Signed at Washington, DC, this 9th day of January 2009.

Elliott S. Kushner,

Certifying Officer, Division of Trade Adjustment Assistance.

[FR Doc. E9–649 Filed 1–14–09; 8:45 am]

BILLING CODE 4510–FN–P

DEPARTMENT OF LABOR

Employment and Training Administration

[TA–W–63,981]

Prime Tanning Company, Incorporated, Berwick, ME; Notice of Affirmative Determination Regarding Application for Reconsideration

By application dated December 19, 2008, the Department of Labor (Department) received a request for administrative reconsideration of the Department's Notice of negative determination regarding workers' eligibility to apply for Trade Adjustment Assistance (TAA) and Alternative Trade Adjustment Assistance (ATAA) applicable to workers and former workers of the subject firm. The determination was issued on November 25, 2008. The Department's Notice of determination was published in the **Federal Register** on December 10, 2008 (73 FR 75138). Workers at the subject firm produce whole- and half-side leather sides, and are not separately identifiable by product line.

The negative determination was based on the Department's findings that the subject firm did not shift production to a foreign country and that neither the subject firm nor its major declining customers increased imports of articles like or directly competitive with those produced by the subject firm.

In the request for reconsideration, a company official alleged that ''many shoe manufacturers, including those in our backyard, transferred their purchasing of tanned leather to those facilities in Asia'' and that ''the leather industry in the United States has all but disappeared.''

A careful review of previously-submitted material shows that, during the relevant period, the subject firm may have supplied component parts for articles produced by a firm with a currently TAA certified worker group.

The Department has carefully reviewed the request for reconsideration, and has determined that the Department will conduct further investigation to determine if the workers meet the eligibility requirements of the Trade Act of 1974.

Conclusion

After careful review of the application, I conclude that the claim is of sufficient weight to justify reconsideration of the U.S. Department of Labor's prior decision. The application is, therefore, granted.

Signed at Washington, DC, this 2nd day of January 2009.

Linda G. Poole,

Certifying Officer, Division of Trade Adjustment Assistance.

[FR Doc. E9–648 Filed 1–14–09; 8:45 am]

BILLING CODE 4510–FN–P

DEPARTMENT OF LABOR

Employment and Training Administration

[TA–W–64,083]

American Axle & Manufacturing, Detroit Manufacturing Complex, Holbrook Avenue and Saint Aubin, Detroit, MI; Amended Certification Regarding Eligibility To Apply for Worker Adjustment Assistance and Alternative Trade Adjustment Assistance

In accordance with section 223 of the Trade Act of 1974 (19 U.S.C. 2273), and section 246 of the Trade Act of 1974 (26 U.S.C. 2813), as amended, the Department of Labor issued a Certification of Eligibility to Apply for Worker Adjustment Assistance and Alternative Trade Adjustment Assistance on November 24, 2008, applicable to all workers of American Axle & Manufacturing, Detroit Manufacturing Complex, Detroit, Michigan. The notice was published in the **Federal Register** on December 10, 2008 (73 FR 75137).

In response to a petition filed by a State agency representative on behalf of workers producing auto parts at American Axle & Manufacturing, Detroit Forge Plant, 8435 Saint Aubin, Detroit, Michigan (TA–W–64,742), the Department reviewed the certification for workers of American Axle & Manufacturing, Detroit Manufacturing Complex, Detroit, Michigan (TA–W–64,083).

The review shows that the address for the Detroit Complex is 1840 Holbrook Avenue and is comprised of multiple plants producing drive train components, including axle, steering linkage, and other metal-formed products. Two of the firm's sites, Saint Aubin and Holbrook Avenue, merged in 2007. When these locations were merged, the Holbrook address became the primary address for the multiple plants in the Detroit Complex.

The Department is amending the certification to clarify that the certification is to cover all workers of American Axle & Manufacturing, Detroit Manufacturing Complex, including those workers in forge and non-forge plants at Saint Aubin and Holbrook Avenue, Detroit, Michigan.

The amended notice applicable to TA-W–64,083 is hereby issued as follows:

''All workers of American Axle & Manufacturing, Detroit Manufacturing Complex, Saint Aubin and Holbrook Avenue, Detroit, Michigan, who became totally or partially separated from employment on or after September 16, 2007 through November 24, 2010, are eligible to apply for adjustment assistance under Section 223 of the Trade Act of 1974, and are also eligible to apply for alternative trade adjustment assistance under Section 246 of the Trade Act of 1974.''

Signed in Washington, DC, this 8th day of January 2009.

Linda G. Poole,

Certifying Officer, Division of Trade Adjustment Assistance.

[FR Doc. E9–645 Filed 1–14–09; 8:45 am]

BILLING CODE 4510–FN–P

DEPARTMENT OF LABOR

Employment and Training Administration

[TA–W–63,897]

IAC Canton, Inc., a Subsidiary of International Automotive Components Group North America, Inc., Canton, OH; Notice of Negative Determination on Reconsideration

On November 6, 2008, the Department issued an Affirmative Determination Regarding Application for Reconsideration for the workers and former workers of the subject firm. The notice was published in the **Federal Register** on November 13, 2008 (73 FR 67207).

The initial investigation resulted in a negative determination based on the finding that imports of rubber sheets, dash insulators, and rubber floor mats did not contribute importantly to worker separations at the subject firm and no shift of production to a foreign source occurred.

The petitioner alleged that the subject firm has been moving the dash insulator equipment to Canada and requested that an investigation of a shift in production to Canada be undertaken.

The Department of Labor contacted a company official to verify this information. The company official stated that no production of rubber sheets, dash insulators, and rubber floor mats and no equipment have been moved from the subject facility to Canada. The company official also provided a statement that the production was shifted from the subject facility to Springfield, Tennessee.

The petitioner further alleges that production at the subject firm has been negatively impacted by increase in sales of imported vehicles. The petitioner concludes that because rubber sheets, dash insulators, and rubber floor mats are used to manufacture vehicles and sales and production of rubber sheets, dash insulators, and rubber floor mats at the subject firm have been negatively impacted by increasing presence of foreign imports of vehicles on the market, workers of the subject firm should be eligible for TAA.

In order to establish import impact, the Department must consider imports that are like or directly competitive with those produced at the subject firm. The Department conducted a survey of the subject firm's major declining customer regarding its purchases of rubber sheets, dash insulators, and rubber floor mats. The survey revealed that the declining customer did not import rubber sheets, dash insulators, and rubber floor mats in 2006, 2007 and during January through July 2008.

Imports of vehicles cannot be considered like or directly competitive with rubber sheets, dash insulators, and rubber floor mats produced by IAC Canton, Inc., Canton, Ohio, and imports of vehicles are not relevant in this investigation.

Whether the subject firm's customers were import impacted is relevant to a determination of whether subject firm workers are eligible for TAA based on the subject firm being a secondary upstream supplier of a trade certified primary firm. For certification on the basis of the workers' firm being a secondary upstream supplier, the subject firm must produce component parts of an article that was the basis for a TAA certification of customer(s) during the relevant period.

The Department conducted a further investigation and determined that none of the customers of the subject firm was certified eligible for TAA during the relevant period.

Conclusion

After reconsideration, I affirm the original notice of negative determination of eligibility to apply for worker adjustment assistance for workers and former workers of IAC Canton, Inc., a subsidiary of International Automotive Components Group, North America, Inc., Canton, Ohio.

Signed at Washington, DC, this 9th day of January 2009.

Elliott S. Kushner,

Certifying Officer, Division of Trade Adjustment Assistance.

[FR Doc. E9–647 Filed 1–14–09; 8:45 am]

BILLING CODE 4510–FN–P

DEPARTMENT OF LABOR

Employment and Training Administration

Announcement of Public Briefings on Using Redesigned Labor Certification Forms and Stakeholder Meeting

AGENCY: Employment and Training Administration, Labor.

ACTION: Notice.

SUMMARY: The Office of Foreign Labor Certification (OFLC) in the Department of Labor's Employment & Training Administration (ETA) has been re-engineering several of its program forms to improve the information it collects from the public. These changes are intended to improve the application to and day-to-day operation of OFLC programs. The system re-engineering will impact the program for the Temporary Employment of Nonimmigrants in Professional, Specialty Occupations, and as Fashion Models (H–1B, H–1B1, and E–3). The Form ETA 9035, the *Labor Condition Application* (OMB control number 1205–0310) used for the H–1B, H–1B1, and E–3 programs, was redesigned and submitted for public comment, 73 FR 36357, Jun. 26, 2008, and for review by the Office of Management and Budget (OMB), 73 FR 66259, Nov. 7, 2008. In addition, the Permanent Labor Certification Program (PERM), OFLC will be implementing changes to the electronic filing process and is implementing a revised application form. The redesigned Form ETA 9089 (OMB control number 1205–451) has been approved by OMB subject to review of the final electronic version.

ETA is issuing this notice to announce that OFLC will offer two public briefings to educate stakeholders, program users, and other interested members of the public on using the re-engineered 9035 and 9089 application forms, and the online portal system by which most users file program applications.

ETA will also hold a stakeholder meeting in San Diego, California on February 3, 2009.

As currently planned, the two briefings will take place in February, 2009 in San Diego and Baltimore, Maryland. This notice provides the public with locations, dates, and registration information regarding the briefings.

FOR FURTHER INFORMATION CONTACT: William L. Carlson, Ph.D., Administrator, Office of Foreign Labor Certification, Employment and Training Administration, 200 Constitution Avenue, NW., Room C–4312, Washington, DC 20210; Telephone: (202) 693–3010 (this is not a toll-free number).

SUPPLEMENTARY INFORMATION: The following registration information should be used by any member of the public planning to attend any of the briefing sessions.

San Diego: February 4, 2009.

Time: 9:30 a.m. to 12:30 p.m.

PERM Update (changes to electronic filing and new application form) and H–1B LCA Form 9035.

Location: Manchester Grand Hyatt, One Market Place, San Diego, California 92101

Washington, DC: February 9, 2009.

Time: 9:30 a.m. to 12:30 p.m.

PERM Update (changes to electronic filing and new application form) and H–1B LCA Form 9035.

Location: Baltimore Marriott Inner Harbor at Camden Yards, 110 South Eutaw Street, Baltimore, MD 21202.

Registration: To register for one of the briefings listed above, please use the following information. To complete the registration process on-line, please visit *http://www.dtiassociates.com/oflcbriefings.* For questions regarding the registration process, please call (703) 299–1623 (this is not a toll-free number). Due to space considerations, attendance will be limited to those who register on-line.

Signed in Washington, DC, this 9th day of January 2009.

Brent R. Orrell,

Deputy Assistant Secretary, Employment and Training Administration.

[FR Doc. E9–678 Filed 1–14–09; 8:45 am]

BILLING CODE 4510–FP–P

DEPARTMENT OF LABOR

Employment and Training Administration

[TA–W–64,218]

Trilogy Finishing, Inc., Detroit, MI; Notice of Revised Determination on Reopening

On January 5, 2009, the Department, on its own motion, reopened its investigation for workers and former workers of the subject firm. Trilogy Finishing, Inc. in Detroit, Michigan is comprised of the Office and Buffing Plant and the Plating Plant.

The initial investigation resulted in a negative determination issued on December 15, 2008, based on the finding that there were no increased imports of articles like or directly competitive with buffed, polished and/or nickel-plated metal parts produced by Trilogy Finishing, Inc., nor did the firm shift that production to a foreign country. Since the workers were denied eligibility to apply for trade adjustment assistance (TAA) they were also denied eligibility to apply for alternative trade adjustment assistance (ATAA) for older workers. The notice will be published soon in the **Federal Register**.

After the decision was issued, the Department received a response to the survey conducted for the primary customers of Trilogy Finishing, Inc., Detroit, Michigan, regarding their purchases of buffed, polished and/or nickel-chrome plated metal parts (including like or directly competitive articles) in 2006, 2007, and January through September of 2007 and 2008. This late survey response showed that the customer increased import purchases while reducing purchases from the subject firm.

There were declines in employment and production at Trilogy Finishing, Inc., Detroit, Michigan, during the relevant period.

Based on these findings, it is determined in this case that the requirements of (a)(2)(A) of Section 222 have been met.

In order for the Department to issue a certification of eligibility to apply for alternative trade adjustment assistance ATAA, the group eligibility requirements of Section 246 of the Trade Act must be met. The Department has determined in this case that the requirements of Section 246 have been met.

A significant number of workers at the firm are age 50 or over and possess skills that are not easily transferable.

Conclusion

After careful consideration of the new facts obtained on reopening, it is concluded that increased imports of articles like or directly competitive with buffed, polished and/or nickel-chrome plated metal parts produced by Trilogy Finishing, Inc., Detroit, Michigan, contributed importantly to the total or partial separation of workers and to the decline in sales or production at that firm or subdivision.

In accordance with the provisions of the Trade Act of 1974, I make the following revised determination:

"All workers of Trilogy Finishing, Inc., Detroit, Michigan, who became totally or partially separated from employment on or after October 3, 2007 through two years from the date of certification, are eligible to apply for adjustment assistance under Section 223 of the Trade Act of 1974, and are also eligible to apply for alternative trade adjustment assistance under Section 246 of the Trade Act of 1974, as amended."

Signed in Washington, DC, this 6th day of January 2009.

Linda G. Poole,

Certifying Officer, Division of Trade Adjustment Assistance.

[FR Doc. E9–646 Filed 1–14–09; 8:45 am]

BILLING CODE 4510–FN–P

DEPARTMENT OF LABOR

Employment and Training Administration

[SGA/DFA–PY–08–09]

Solicitation for Grant Applications (SGA)

AGENCY: Employment and Training Administration (ETA), Labor.

ACTION: Notice: Reopening of period to submit applications for SGA/DFA–PY–08–09.

SUMMARY: The Employment and Training Administration published a document in the **Federal Register** on November 17, 2008, announcing the availability of funds and issuing a solicitation for grant applications (SGA) for Local Young Offender Planning Grants, State/Local Juvenile Offender Implementation Grants and an Intermediary Juvenile Reentry Grant 73 FR 67884 (Nov. 17, 2008). This notice reopens the period during which applications for such funds may be submitted.

DATES: *Key Dates:* The new closing date for receipt of applications under this announcement is January 29, 2009.

FOR FURTHER INFORMATION CONTACT: B. Jai Johnson, Grant Specialist, Division of Federal Assistance, at (202) 693–3296.

SUPPLEMENTARY INFORMATION:

Date Extension: In the **Federal Register** of November 17, we established a December 18, 2008 closing date for applications under this SGA. It subsequently came to our attention that we mistakenly referred to a different due date for electronically submitted applications under the heading, ''Part IV—Application and Submission Information, Section C, Submission Date, Times, and Addresses'' on page 67888. We attempted to correct this mistake by publishing a separate notice in the December 1, 2008, **Federal Register** to clarify that the December 18 due date applied to all applications, including those submitted electronically (73 FR 72853).

However, we remain concerned that the December 1 notice may not have resolved confusion over the applicable deadline. Therefore we are reopening for two weeks the period during which we will accept applications until January 29, 2009.

Submission instructions: Applications must be submitted in accordance with instructions contained in Part IV of the SGA by the date specified above. All other terms, conditions, criteria and provisions of the SGA remain in effect (including the correction regarding the goal of the intermediary reentry grant in Part I as provided in the December 1 **Federal Register** Notice).

Other Information: Applicants that have applied before for this solicitation are not required to resubmit their application. However, such applicants have the option to withdraw their proposal and re-submit if they so choose. If you choose to re-submit, you must notify the Grant Officer by E-mail (*Magruder.Chari@dol.gov*) stating that you wish to withdraw the initial proposal and resubmit. Once withdrawn the initial proposal will not be considered and failure to resubmit or a late resubmittal will disqualify the applicant from consideration.

For tracking purposes, resubmitted or new first time proposals must use the following on the cover sheet: ''SGA–DFA–PY 08–09A.''

Signed at Washington, DC, this 9th of January 2009.

Chari Magruder,

Grant Officer.

[FR Doc. E9–650 Filed 1–14–09; 8:45 am]

BILLING CODE 4510–FT–P

NATIONAL NANOTECHNOLOGY COORDINATION OFFICE

Nanoscale Science, Engineering and Technology Subcommittee, National Science and Technology Council, Committee on Technology; Human and Environmental Exposure Assessment Workshop: Public Meeting

ACTION: Notice of public meeting.

SUMMARY: The National Nanotechnology Coordination Office (NNCO), on behalf of the Nanoscale Science, Engineering, and Technology (NSET) Subcommittee of the Committee on Technology, National Science and Technology Council (NSTC), will hold a workshop on February 24–25, 2009 to provide an open forum to discuss the state-of-the-art of the science related to environmental, health, and safety aspects of engineered nanoscale materials in the area of human and environmental exposure assessment. Human and Environmental Exposure Assessment is one of the five environmental, health, and safety research categories identified in the NSET Subcommittee document *Strategy for Nanotechnology-Related Environmental, Health, and Safety Research* (*http://www.nano.gov/NNI_EHS_Research_Strategy.pdf*), which was released February 14, 2008.

DATES: The public meeting will be held on Tuesday, February 24, 2009 from 8 a.m. until 5:30 p.m. and on Wednesday, February 25, 2009 from 8 a.m. to 12:30 p.m.

ADDRESSES: The public meeting will be at the Consumer Protection Safety Commission conference facility, 4330 East West Highway, Bethesda, MD 20814 (Metro stop: Bethesda on the Red Line). For directions, please see *http://www.cpsc.gov/about/direct.html*.

Registration: Due to space limitations and security requirements, pre-registration for the workshop is required. People interested in attending the workshop should register online at *http://www.nano.gov/html/meetings/exposure/registration.html*. Written notices of participation by e-mail should be sent to *exposure@nnco.nano.gov*. Written notices may be mailed to the Exposure Assessment Workshop, c/o NNCO, 4201 Wilson Blvd., Stafford II, Suite 405, Arlington, VA 22230. Registration is on a first-come, first-serve basis. Registration will close on February 21, 2009 at 5 p.m. EST.

Information about the meeting, including the agenda, is posted at *http://www.nano.gov*.

FOR FURTHER INFORMATION, CONTACT: For information regarding this Notice, please contact Liesl Heeter, National Nanotechnology Coordination Office. Telephone: (703) 292–4533. E-mail: *exposure@nnco.nano.gov*.

SUPPLEMENTARY INFORMATION: Human and environmental exposure assessment research is used to guide efforts to improve environmental, health, and safety (EHS) protection with regard to nanoscale engineered materials and to monitor trends and progress. The purpose of this workshop is to hold an open forum to discuss the progress achieved in the area of human and environmental exposure assessment research and to discuss the path forward for addressing the research needs in this area. Specifically, the Nanotechnology Environmental Health Implications (NEHI) Working Group of the NSET Subcommittee has identified five priority research needs within the human and environmental exposure category: Characterizing exposure among workers; identifying population groups and environments exposed to engineered nanoscale materials; characterizing exposure to the general population from industrial processes

and industrial and consumer products containing nanomaterials; characterizing the health of exposed populations and environments; and understanding workplace processes and factors that determine exposure to nanomaterials.

The presentations, discussions, and comments provided at this meeting will inform the NEHI Working Group's continuing adaptive management of the National Nanotechnology Initiative's environmental, health, and safety research strategy.

The NSET Subcommittee coordinates planning, budgeting, and program implementation and review to ensure a balanced and comprehensive National Nanotechnology Initiative (NNI). The NSET Subcommittee is composed of representatives from Federal agencies participating in the NNI. In order to perform work in the area of environmental, health, and safety, NSET created a working group, the Nanotechnology Environmental Implications (NEHI) Working Group. The NNCO provides technical and administrative support to the NSET Subcommittee and serves as a central point of contact for the NNI.

For more information on the National Nanotechnology Initiative and its various working entities, please visit *http://www.nano.gov*.

M. David Hodge,

Operations Manager, OSTP.

[FR Doc. E9–664 Filed 1–14–09; 8:45 am]

BILLING CODE 3170–W9–P

OFFICE OF MANAGEMENT AND BUDGET

Cost of Hospital and Medical Care Treatment Furnished by the Department of Defense Military Treatment Facilities; Certain Rates Regarding Recovery From Tortiously Liable Third Persons

AGENCY: Office of Management and Budget, Executive Office of the President.

ACTION: Notice.

SUMMARY: By virtue of the authority vested in the President by Section 2(a) of Pub. B. 87–603 (76 Stat. 593; 42 U.S.C. 2652), and delegated to the Director of the Office of Management and Budget by the President through Executive Order No. 11541 of July 1, 1970, the rates referenced below are hereby established. These rates are for use in connection with the recovery from tortiously liable third persons for the cost of inpatient medical services furnished by military treatment facilities through the Department of Defense (DoD). The rates have been established in accordance with the requirements of OMB Circular A–25, requiring reimbursement of the full cost of all services provided. The inpatient medical service rates referenced are effective upon publication of this notice in the **Federal Register** and will remain in effect until further notice. The outpatient medical, dental, and cosmetic surgery rates published on November 25, 2008 remain in effect until further notice. Pharmacy rates are updated periodically. A full disclosure of the rates is posted at the DoD's Uniform Business Office Web Site: *http://www.tricare.mil/ocfo/_docs/FY09%20Direct%20Care%20Inpatient%20Billing%20Rates%20Memo.pdf*.

Jim Nussle,

Director.

[FR Doc. E9–718 Filed 1–14–09; 8:45 am]

BILLING CODE 3110–01–P

POSTAL REGULATORY COMMISSION

[Docket No. MC2008–1 (Phase II); Order No. 168]

Review of Nonpostal Services

AGENCY: Postal Regulatory Commission.

ACTION: Notice.

SUMMARY: The Commission is establishing a docket to develop a complete record on three matters that were not resolved in a recent docket. This will allow the Postal Service and others an opportunity to present their views prior to final Commission decision on the status of the underlying services.

DATES: January 29, 2009: Deadline for the Postal Service and other participants to file supporting evidence. February 10, 2009: Deadline for new interventions. February 11, 2009: Prehearing conference will be held on at 10 a.m. in the Commission's hearing room.

ADDRESSES: Submit filings electronically via the Commission's Filing Online system at *http://www.prc.gov.*

FOR FURTHER INFORMATION CONTACT: Stephen L. Sharfman, General Counsel, 202–789–6820 and *stephen.sharfman@prc.gov.*

SUPPLEMENTARY INFORMATION: *Regulatory History,* 72 FR 73909 (December 28, 2007).

In Order No. 154, the Commission authorized 14 nonpostal services to continue.[1] Finding the record insufficient in certain respects, the Commission deferred ruling on three issues more fully addressed below, involving licensing, the warranty repair program, and sales of music compact discs. This order establishes procedures to develop a more complete record on these issues beginning with an opportunity for the Postal Service to present its case on these issues and followed by an opportunity for interested persons to respond.[2]

Licensing. In Order No. 154, the Commission generally authorized the licensing of the Postal Service's intellectual property to continue as a nonpostal service. *Id.* at 73. As an interim measure, however, the Commission grandfathered the licenses of the Postal Service's brands on products relating to the Postal Service's operations, categorized by the Postal Service as Mailing & Shipping, pending the outcome of Phase II. This issue was brought to the forefront late in the first phase of this proceeding by Pitney Bowes upon learning that Postal Service-branded postage meter ink cartridges were being sold.[3] The Commission found that the record on licenses related to Postal Service operations to be insufficiently developed for it to determine whether those licenses should be terminated or authorized to continue.[4]

Further proceedings in this Phase II are needed to develop a more complete record regarding licensing programs for products related to Postal Service operations generally, as well as the

[1] PRC Order No. 154, Review of Nonpostal Services Under the Postal Accountability and Enhancement Act, December 19, 2008 (Order No. 154).

[2] The Commission also indicated a separate docket would be established to develop regulations applicable to authorized nonpostal services. That docket will be initiated shortly.

[3] Pitney Bowes Inc. Motion to Compel United States Postal Service to File a Complete List of Nonpostal Services, October 15, 2008. Pitney Bowes' motion, supported by pleadings responsive to the matter, challenged the appropriateness of the Postal Service licensing its trademark for products related to Postal Service operations. *See also* PRC Order No. 126, Order Granting, In Part, Pitney Bowes Inc. Motion to Compel, November 4, 2008.

[4] Order No. 154 at 76. Order No. 154 directed the Postal Service to ''promptly notify the Commission of any other such licenses [that relate to postal operations] that may exist.'' Id., n.146. This order is not intended to modify that directive. The Postal Service indicates five vendors are licensed to sell Mailing & Shipping products bearing the Postal Service's intellectual property. Initial Response of the United States Postal Service to Order No. 74, June 9, 2008, at 22. *See also* Response of the United States Postal Service to Order No. 126 Regarding Licensing Agreements and Notice of Filing of Sworn Statement, November 17, 2008; and Errata to Response of the United States Postal Service to Order No. 126 Regarding Licensing Agreements, November 19, 2008.

specific meter ink cartridge license cited by Pitney Bowes. Other related issues may also be explored.[5] The Postal Service shall file a sworn statement(s) by a knowledgeable individual(s) on or before January 29, 2009, providing details of each Mailing & Shipping services license and any additional information and evidence deemed relevant in support of its continuing the commercial licensing of products related to Postal Service operations.[6] The sworn statement shall also address the requirements of section 404(e)(3) of title 39. Interested persons, including any licensees, who support continuing Postal Service branding of such products may also submit relevant evidence by January 29, 2009. Such sworn statements shall address the requirements of section 404(e)(3) of title 39 and may address any other matter deemed relevant to issues before the Commission in this Phase II. As discussed below, interested persons will be afforded an opportunity to respond to these submissions.

Warranty repair program. In Order No. 154, the Commission concluded that the warranty repair program, under which the Postal Service is compensated by the original equipment manufacturer (OEM) for repairs by the Postal Service of the OEM's equipment still under warranty was, with one possible exception, not subject to review under 39 U.S.C. 404(e). *Id.* at 84–85. The exception concerns plans (which may already be implemented) by the Postal Service to expand the activity to other customers of the OEM.[7] Order No. 154 deferred a determination on this issue to Phase II.

Assuming it wishes to offer the expanded warranty repair service, the Postal Service shall provide details of this service in the form of a sworn statement(s) by a knowledgeable individual(s). The statement(s) shall also identify the commencement date of such service, provide annual revenues for fiscal years 2006 through 2008, address the requirements of section 404(e) of title 39, and any other matter the Postal Service believes is relevant to the issue before the Commission. Interested persons who support the Postal Service providing such services may also submit sworn statements by January 29, 2009, that address any matter deemed relevant to issues before the Commission.

Sales of CDs. In Order No. 154, the Commission addressed the Postal Service's proposal to classify greeting cards and other stationery items as postal services. Order No. 154 at 34–35. While the Commission found that greeting cards and stationery may be classified as a competitive postal service, it expressed reservations about the sale of compact discs (CDs) featuring various recording artists, specifically noting that they ''are not authorized as 'greeting cards'.'' *Id.* at 35. Recognizing the scale of the Postal Service operations, the Commission observed that details of certain activities may have been overlooked in response to Order No. 74.[8] Thus, the Commission suggested that the Postal Service review its various retail programs and provide details of any omissions, including those related to CD sales, for consideration in Phase II of this proceeding.

To the extent it wishes to pursue this issue, the Postal Service shall file by January 29, 2009, a sworn statement(s) by a knowledgeable individual(s) which provides complete details of each retail program for which information may have been inadvertently omitted in response to Order No. 74 and which the Postal Service seeks to have classified as a postal service or, alternatively, to continue to offer as a nonpostal service. In either case, the Postal Service should provide sufficient justification to support its proposed treatment, *i.e.,* that it may be appropriately classified as a postal service or, alternatively, that it satisfies section 404(e)(3). In addition, the Postal Service should also provide the commencement date of each program (product or service) and the annual revenues for fiscal years 2006 through 2008. Interested persons who support the Postal Service providing such services may also submit sworn statements by January 29, 2009, that address any matter deemed relevant to issues before the Commission.

Prehearing conference and additional procedures. Phase II is designed to provide the Postal Service and interested persons an opportunity to present evidence and arguments in support of their respective positions.[9] Following the submission of the sworn statements discussed above, the Commission will convene a prehearing conference on February 11, 2009, to discuss the balance of the procedural schedule. This shall include the need for hearings, the due dates for responses to the statements due January 29, 2009, the opportunity for rebuttal thereto, and briefing dates.

It is Ordered:

1. Docket No. MC2008–1, Phase II, is established to develop a more complete record on the activities discussed in the body of this order concerning Postal Service branding of Mailing & Shipping products, the warranty repair program, the retail sale of recorded music, and any other retail activities which, upon further consideration, may be identified by the Postal Service for review in this proceeding.

2. The Commission will sit *en banc* in this proceeding.

3. The Postal Service and other participants that support continuation of such services shall file supporting evidence as provided in the body of this order on or before January 29, 2009.

4. Any interested persons may file a notice of intervention pursuant to rule 20 or 20a of the Commission's Rules of Practice and Procedure, 39 CFR 3001.20 and 3001.20a, no later than February 10, 2009. The notice shall state whether the intervenor requests a hearing. Any person who submitted a filing in the initial phase of this proceeding will be deemed to be a participant in Phase II and need not submit a notice of intervention.

5. A prehearing conference will be held in the Commission's hearing room on February 11, 2009, at 10 a.m., to establish dates, as necessary, for the completion of discovery, need for hearings, filing of rebuttal evidence, and other matters related to this proceeding as set forth in the body of this order.

6. Robert Sidman is designated as Public Representative to represent the interests of the general public in this proceeding.

7. The Secretary shall arrange for publication of this notice and order in the **Federal Register**.

By the Commission.

Steven W. Williams,

Secretary.

[FR Doc. E9–771 Filed 1–14–09; 8:45 am]

BILLING CODE 7710–FW–P

[5] *See* Order No. 154 at 75, n.145. The relevant market and the Postal Service's regulatory role in the production and distribution of postage evidencing systems may be addressed.

[6] Sworn statements submitted in Phase II are subject to the Commission's Rules of Practice and Procedure. 39 CFR 3001.1 *et seq.*

[7] Statement of Patrick R. Donahoe on Behalf of United States Postal Service (Donahoe Statement), June 23, 2008, at 15. *See also* Initial Response of the United States Postal Service to Order No. 74, June 9, 2008, at 28–29.

[8] PRC Order No. 74, Order Granting Motion to Compel and Revising the Procedural Schedule, April 29, 2008 (Order No. 74).

[9] The record already compiled in the first part of this proceeding may be incorporated by reference or adopted as part of a separate statement. If the Postal Service continues to rely upon the information in that record, it shall be subject to written and oral cross-examination in this Phase II proceeding.

POSTAL SERVICE

Board of Governors; Sunshine Act Meeting

TIME AND DATE: 1 p.m., Thursday, January 22, 2009.

PLACE: Washington, DC at U.S. Postal Service Headquarters, 475 L'Enfant Plaza, SW.

STATUS: Closed.

MATTERS TO BE CONSIDERED:

Thursday, January 22 at 1:00 p.m. (Closed)

1. Pricing.
2. Financial Matters.
3. Strategic Issues.

CONTACT PERSON FOR MORE INFORMATION: Julie S. Moore, Secretary of the Board, U.S. Postal Service, 475 L'Enfant Plaza, SW., Washington, DC 20260–1000. Telephone (202) 268–4800.

Julie S. Moore,

Secretary.

[FR Doc. E9–831 Filed 1–13–09; 11:15 am]

BILLING CODE 7710–12–P

SECURITIES AND EXCHANGE COMMISSION

Sunshine Act Meeting

CITATION OF PREVIOUS ANNOUNCEMENT: [To be Published]

STATUS: Closed Meeting.

PLACE: 100 F Street, NE., Washington, DC.

DATE AND TIME OF PREVIOUSLY ANNOUNCED MEETING: Thursday, January 15, 2009 at 2 p.m.

CHANGE IN THE MEETING: Time Change.

The Closed Meeting scheduled for Thursday, January 15, 2009 at 2 p.m. has been changed to Thursday, January 15, 2009 at 1 p.m.

At times, changes in Commission priorities require alterations in the scheduling of meeting items. For further information and to ascertain what, if any, matters have been added, deleted or postponed, please contact the Office of the Secretary at (202) 551–5400.

Dated: January 12, 2009.

Elizabeth M. Murphy,

Secretary.

[FR Doc. E9–867 Filed 1–14–09; 8:45 am]

BILLING CODE 8011–01–P

SECURITIES AND EXCHANGE COMMISSION

[File No. 500–1]

The JPM Company, and Tidalwave Holdings, Inc.; Order of Suspension of Trading

January 13, 2009.

It appears to the Securities and Exchange Commission that there is a lack of current and accurate information concerning the securities of The JPM Company because it has not filed any periodic reports since the period ended June 30, 2001.

It appears to the Securities and Exchange Commission that there is a lack of current and accurate information concerning the securities of Tidalwave Holdings, Inc. because it has not filed any periodic reports since the period ended December 31, 2000.

The Commission is of the opinion that the public interest and the protection of investors require a suspension of trading in the securities of the above-listed companies.

Therefore, it is ordered, pursuant to Section 12(k) of the Securities Exchange Act of 1934, that trading in the securities of the above-listed companies is suspended for the period from 9:30 a.m. EST on January 13, 2009, through 11:59 p.m. EST on January 27, 2009.

By the Commission.

Elizabeth M. Murphy,

Secretary.

[FR Doc. E9–904 Filed 1–13–09; 4:15 pm]

BILLING CODE 8011–01–P

SECURITIES AND EXCHANGE COMMISSION

[Release No. 34–59213; File No. SR–CBOE–2008–134]

Self-Regulatory Organizations; Chicago Board Options Exchange, Incorporated; Notice of Filing and Immediate Effectiveness of Proposed Rule Change Relating to Temporary Membership Status and Interim Trading Permit Access Fees

January 7, 2009.

Pursuant to Section 19(b)(1) of the Securities Exchange Act of 1934 (''Act''),[1] notice is hereby given that on December 31, 2008, the Chicago Board Options Exchange, Incorporated (''CBOE'' or ''Exchange'') filed with the Securities and Exchange Commission (''Commission'') the proposed rule change as described in Items I, II, and III below, which Items have been prepared by the CBOE. The Commission is publishing this notice to solicit comments on the proposed rule change from interested parties.

[1] 15 U.S.C. 78s(b)(1).

I. Self-Regulatory Organization's Statement of the Terms of Substance of the Proposed Rule Change

CBOE proposes to adjust (i) the monthly access fee for persons granted temporary CBOE membership status (''Temporary Members'') pursuant to Interpretation and Policy .02 under CBOE Rule 3.19 (''Rule 3.19.02'') and (ii) the monthly access fee for Interim Trading Permit (''ITP'') holders under CBOE Rule 3.27. The text of the proposed rule change is available on the Exchange's Web site (*http://www.cboe.org/Legal/*), at the Exchange's Office of the Secretary, and at the Commission's Public Reference Room.

II. Self-Regulatory Organization's Statement of the Purpose of, and Statutory Basis for, the Proposed Rule Change

In its filing with the Commission, CBOE included statements concerning the purpose of, and basis for, the proposed rule change and discussed any comments it received on the proposed rule change. The text of these statements may be examined at the places specified in Item IV below. The CBOE has prepared summaries, set forth in Sections A, B, and C below, of the most significant aspects of such statements.

A. Self-Regulatory Organization's Statement of the Purpose of, and Statutory Basis for, the Proposed Rule Change

1. Purpose

The current access fee for Temporary Members under Rule 3.19.02 [2] and the current access fee for ITP holders under Rule 3.27 [3] are both $9,500 per month. Both access fees are currently set at the indicative lease rate (as defined below) for December 2008. The Exchange proposes to adjust both access fees effective at the beginning of January 2009 to be equal to the indicative lease rate for January 2009 (which is $10,175). Specifically, the Exchange proposes to revise both the Temporary Member access fee and the ITP access fee to be $10,175 per month commencing on January 1, 2009.

[2] *See* Securities Exchange Act Release No. 56458 (September 18, 2007), 72 FR 54309 (September 24, 2007) (SR-CBOE–2007–107) for a description of the Temporary Membership status under Rule 3.19.02.

[3] *See* Securities Exchange Act Release No. 58178 (July 17, 2008), 73 FR 42634 (July 22, 2008) (SR–CBOE–2008–40) for a description of the Interim Trading Permits under Rule 3.27.

The indicative lease rate is defined under Rule 3.27(b) as the highest clearing firm floating monthly rate[4] of the CBOE Clearing Members that assist in facilitating at least 10% of the CBOE transferable membership leases.[5] The Exchange determined the indicative lease rate for January 2009 by polling each of these Clearing Members and obtaining the clearing firm floating monthly rate designated by each of these Clearing Members for that month.

The Exchange used the same process to set the proposed Temporary Member and ITP access fees that it used to set the current Temporary Member and ITP access fees. The only difference is that the Exchange used clearing firm floating monthly rate information for the month of January 2009 to set the proposed access fees (instead of clearing firm floating monthly rate information for the month of December 2008 as was used to set the current access fees) in order to take into account changes in clearing firm floating monthly rates for the month of January 2009.

The Exchange believes that the process used to set the proposed Temporary Member access fee and the proposed Temporary Member access fee itself are appropriate for the same reasons set forth in CBOE rule filing SR–CBOE–2008–12 with respect to the original Temporary Member access fee.[6] Similarly, the Exchange believes that the process used to set the proposed ITP access fee and the proposed ITP access fee itself are appropriate for the same reasons set forth in CBOE rule filing SR–CBOE–2008–77 with respect to the original ITP access fee.[7]

Each of the proposed access fees will remain in effect until such time either that the Exchange submits a further rule filing pursuant to Section 19(b)(3)(A)(ii) of the Act[8] to modify the applicable access fee or the applicable status (*i.e.*, the Temporary Membership status or the ITP status) is terminated. Accordingly, the Exchange may, and likely will, further adjust the proposed access fees in the future if the Exchange determines that it would be appropriate to do so taking into consideration lease rates for transferable CBOE memberships prevailing at that time.

The procedural provisions of the CBOE Fee Schedule related to the assessment of each proposed access fee are not proposed to be changed and will remain the same as the current procedural provisions relating to the assessment of that access fee.

2. Statutory Basis

The Exchange believes that the proposed rule change is consistent with Section 6(b) of the Act,[9] in general, and furthers the objectives of Section 6(b)(4) of the Act,[10] in particular, in that it is designed to provide for the equitable allocation of reasonable dues, fees, and other charges among persons using its facilities.

B. Self-Regulatory Organization's Statement on Burden on Competition

CBOE does not believe that the proposed rule change will impose any burden on competition that is not necessary or appropriate in furtherance of the purposes of the Act.

C. Self-Regulatory Organization's Statement on Comments on the Proposed Rule Change Received From Members, Participants or Others

No written comments were solicited or received with respect to the proposed rule change.

III. Date of Effectiveness of the Proposed Rule Change and Timing for Commission Action

Because the foregoing rule change establishes or changes a due, fee, or other charge imposed by the Exchange, it has become effective pursuant to Section 19(b)(3)(A) of the Act[11] and subparagraph (f)(2) of Rule 19b–4[12] thereunder. At any time within 60 days of the filing of the proposed rule change, the Commission may summarily abrogate such rule change if it appears to the Commission that such action is necessary or appropriate in the public interest, for the protection of investors, or otherwise in furtherance of the purposes of the Act.

IV. Solicitation of Comments

Interested persons are invited to submit written data, views, and arguments concerning the foregoing, including whether the proposed rule change is consistent with the Act. Comments may be submitted by any of the following methods:

Electronic Comments

- Use the Commission's Internet comment form (*http://www.sec.gov/rules/sro.shtml*); or
- Send an e-mail to *rule-comments@sec.gov.* Please include File Number SR–CBOE–2008–134 on the subject line.

Paper Comments

- Send paper comments in triplicate to Elizabeth M. Murphy, Secretary, Securities and Exchange Commission, 100 F Street, NE., Washington DC 20549–1090.

All submissions should refer to File Number SR-CBOE–2008–134. This file number should be included on the subject line if e-mail is used. To help the Commission process and review your comments more efficiently, please use only one method. The Commission will post all comments on the Commission's Internet Web site (*http://www.sec.gov/rules/sro.shtml*). Copies of the submission, all subsequent amendments, all written statements with respect to the proposed rule change that are filed with the Commission, and all written communications relating to the proposed rule change between the Commission and any person, other than those that may be withheld from the public in accordance with the provisions of 5 U.S.C. 552, will be available for inspection and copying in the Commission's Public Reference Room, 100 F Street, NE., Washington, DC 20549, on official business days between the hours of 10 a.m. and 3 p.m. Copies of such filing also will be available for inspection and copying at the principal office of the Exchange. All comments received will be posted without change; the Commission does not edit personal identifying information from submissions. You should submit only information that you wish to make available publicly. All submissions should refer to File No. SR–CBOE–2008–134 and should be submitted on or before February 5, 2009.

[4] Rule 3.27(b) defines the clearing firm floating monthly rate as the floating monthly rate that a Clearing Member designates, in connection with transferable membership leases that the Clearing Member assisted in facilitating, for leases that utilize that monthly rate.

[5] The concepts of an indicative lease rate and of a clearing firm floating month rate were previously utilized in the CBOE rule filings that set and adjusted the Temporary Member access fee. Both concepts are also codified in Rule 3.27(b) in relation to ITPs.

[6] *See* Securities Exchange Act Release No. 57293 (February 8, 2008), 73 FR 8729 (February 14, 2008) (SR–CBOE–2008–12), which established the original Temporary Member access fee, for detail regarding the rationale in support of the original Temporary Member access fee and the process used to set that fee, which is also applicable to this proposed change to the Temporary Member access fee as well.

[7] *See* Securities Exchange Act Release No. 58200 (July 21, 2008), 73 FR 43805 (July 28, 2008) (SR–CBOE–2008–77), which established the original ITP access fee, for detail regarding the rationale in support of the original ITP access fee and the process used to set that fee, which is also applicable to this proposed change to the ITP access fee as well.

[8] 15 U.S.C. 78s(b)(3)(A)(ii).

[9] 15 U.S.C. 78f(b).

[10] 15 U.S.C. 78f(b)(4).

[11] 15 U.S.C. 78s(b)(3)(A).

[12] 17 CFR 240.19b–4(f)(2).

For the Commission, by the Division of Trading and Markets, pursuant to delegated authority.[13]

Florence E. Harmon,

Deputy Secretary.

[FR Doc. E9–777 Filed 1–14–09; 8:45 am]

BILLING CODE 8011–01–P

SECURITIES AND EXCHANGE COMMISSION

[Release No. 34–59219; File No. SR–NASDAQ–2008–099]

Self-Regulatory Organizations; The NASDAQ Stock Market LLC; Notice of Filing and Immediate Effectiveness of Proposed Rule Change To Extend the Temporary Suspension of the Continued Listing Requirements Related to Bid Price and Market Value of Publicly Held Shares for Listing on the Nasdaq Stock Market Through April 19, 2009

January 8, 2009.

Pursuant to Section 19(b)(1)[1] of the Securities Exchange Act of 1934 (the ''Act'')[2] and Rule 19b–4 thereunder,[3] notice is hereby given that, on December 18, 2008, The NASDAQ Stock Market LLC (''Nasdaq'') filed with the Securities and Exchange Commission (''Commission'') the proposed rule change as described in Items I and II below, which Items have been prepared by Nasdaq. The Commission is publishing this notice to solicit comments on the proposed rule change from interested persons.

I. Self-Regulatory Organization's Statement of the Terms of Substance of the Proposed Rule Change

Nasdaq proposes to extend the temporary suspension of the application of the continued inclusion bid price and market value of publicly held shares requirements for listing on the Nasdaq Stock Market through April 19, 2009.

II. Self-Regulatory Organization's Statement of the Purpose of, and Statutory Basis for, the Proposed Rule Change

In its filing with the Commission, Nasdaq included statements concerning the purpose of and basis for the proposed rule change and discussed any comments it received on the proposed rule change. The text of these statements may be examined at the places specified in Item IV below. Nasdaq has prepared summaries, set forth in Sections A, B, and C below, of the most significant aspects of such statements.

A. Self-Regulatory Organization's Statement of the Purpose of, and Statutory Basis for, the Proposed Rule Change

1. Purpose

On October 16, 2008, Nasdaq filed a proposed rule change, which was immediately effective, to temporarily suspend the bid price[4] and market value of publicly held shares[5] continued listing requirements otherwise applicable to issuers of common stock, preferred stock, secondary classes of common stock, shares or certificates of beneficial interest of trusts, limited partnership interests, American Depositary Receipts, and their equivalents.[6] This suspension is currently scheduled to last until January 16, 2009, to provide temporary relief to companies from the application of these requirements during a period in which the financial markets face almost unprecedented turmoil, resulting in a crisis in investor confidence and concerns about the proper functioning of the securities markets.[7]

Market conditions have not improved since the suspension began and, in fact, both the number of securities trading below $1 and the number of securities trading between $1 and $2 on Nasdaq has increased. Nasdaq continues to believe that there was no fundamental change in the underlying business model or prospects for many of these companies, and that a decline in general investor confidence has resulted in depressed pricing for companies that otherwise remain suitable for continued listing. These same conditions continue to make it difficult for companies to successfully implement a plan to regain compliance with the price or market value of publicly held shares tests.

Given these extraordinary market conditions, Nasdaq has determined that it is appropriate to continue the temporary suspension of the bid price and market value of publicly held shares requirements for an additional three months, until April 19, 2009. Under this proposal, companies would not be cited for new bid price or market value of publicly held shares deficiencies during the suspension period, and the time allowed to companies already in a compliance period or in the hearings process for bid price or market value of publicly held shares deficiencies would remain suspended with respect to those requirements.[8] Following the temporary suspension, any new deficiencies with the bid price or market value of publicly held shares requirements would be determined using data starting on April 20, 2009.[9] When the suspension expires, companies that were in a compliance period as of October 16, 2008, when the suspension first began, would receive the balance of any pending compliance

[13] 17 CFR 200.30–3(a)(12).

[1] 15 U.S.C. 78s(b)(1).

[2] 15 U.S.C. 78a.

[3] 17 CFR 240.19b–4.

[4] Nasdaq's continued listing requirements relating to bid price are set forth in Rules 4310(c)(4), 4320(e)(2)(E)(ii), 4450(a)(5), 4450(b)(4), and 4450(h)(3) and the related compliance periods are set forth in Rules 4310(c)(8)(D), 4320(e)(2)(E)(ii), and 4450(e)(2). Under these rules, a security is considered deficient if it fails to achieve at least a $1 closing bid price for a period of 30 consecutive business days. Once deficient, Capital Market issuers are provided one automatic 180-day period to regain compliance. Thereafter, these issuers can receive an additional 180-day compliance period if they comply with all Capital Market initial inclusion requirements except bid price. Global Market issuers are also provided one automatic 180-day period to regain compliance, after which they can transfer to the Capital Market, if they comply with all Capital Market initial inclusion requirements except bid price, to take advantage of the second 180-day compliance period. A company can regain compliance by achieving a $1 closing bid price for a minimum of ten consecutive business days.

[5] Nasdaq's continued listing requirements relating to market value of publicly held shares are set forth in Rules 4310(c)(7), 4320(e)(5), 4450(a)(2), 4450(b)(3) and 4450(h)(2) and the related compliance periods are set forth in Rules 4310(c)(8)(B) and 4450(e)(1). Under these rules, a security is considered deficient if it fails to achieve the minimum market value of publicly held shares requirement for a period of 30 consecutive business days. Thereafter, companies have a compliance period of 90 calendar days to achieve compliance by meeting the applicable standard for a minimum of ten consecutive business days.

[6] Securities Exchange Act Release No. 58809 (October 17, 2008), 73 FR 63222 (October 23, 2008) (SR–NASDAQ–2008–082). One comment was submitted on this proposal by Alan F. Eisenberg, Executive Vice President, the Biotechnology Industry Organization. This comment supported the suspension and ''any efforts by the Commission and NASDAQ to extend [the suspension], as necessary, beyond the termination date of January 16, 2009.''

[7] *See, e.g.*, Securities Exchange Act Release No. 58588 (September 18, 2008), 73 FR 55174 (September 24, 2008) (''The Commission is aware of the continued potential of sudden and excessive fluctuations of securities prices and disruption in the functioning of the securities markets that could threaten fair and orderly markets. Given the importance of confidence in our financial markets as a whole, we have also become concerned about sudden and unexplained declines in the prices of securities. Such price declines can give rise to questions about the underlying financial condition of an issuer, which in turn can create a crisis of confidence without a fundamental underlying basis. This crisis of confidence can impair the liquidity and ultimate viability of an issuer, with potentially broad market consequences.'').

[8] Nasdaq would continue to identify on its Web site and in its daily data feed to vendors those companies in a compliance period or in the hearings process as not satisfying the continued listing standards, unless the company regains compliance during the suspension. A company would continue to be subject to delisting for failure to comply with other listing requirements.

[9] Nasdaq would not consider the bid price or market value of publicly held shares for the period before or during the suspension with respect to a company that was not yet non-compliant with those requirements at the start of the suspension.

periods in effect at the time of the initial suspension.[10] Similarly, companies that were in the Hearings process prior to October 16, 2008, would resume in that process at the same stage they were in when the suspension first went into effect. Nasdaq will continue to monitor securities to determine if they regain compliance during the temporary suspension.

Nasdaq believes that extending the temporary suspension will permit companies to continue focusing on running their businesses, rather than satisfying market-based requirements that are largely beyond their control in the current environment. Moreover, this extension will allow investors to buy shares of some of these lower-priced securities without fear that the company will receive a delisting notification or be delisted in the very near term.[11] Nasdaq will continue to monitor market conditions and consider whether it is appropriate to further extend the suspension.

2. Statutory Basis

Nasdaq believes that the proposed rule change is consistent with the provisions of Section 6 of the Act,[12] in general and with Sections [sic] 6(b)(5) of the Act,[13] in particular in that it is designed to prevent fraudulent and manipulative acts and practices, to promote just and equitable principles of trade, to foster cooperation and coordination with persons engaged in regulating, clearing, settling, processing information with respect to, and facilitating transactions in securities, to remove impediments to and perfect the mechanism of a free and open market and a national market system, and, in general, to protect investors and the public interest. The proposed rule change is designed to remove uncertainty regarding the ability of companies to remain listed on Nasdaq during this especially turbulent market environment, thereby protecting investors, facilitating transactions in securities, and removing an impediment to a free and open market.

[10] For example, if a company was 120 days into its first 180-day compliance period for a bid price deficiency when the suspension first started and the company does not regain compliance during the suspension, the company would have sixty days remaining, starting on April 20, 2009, to regain compliance. The company may be eligible for the second 180-day compliance period if it satisfies the conditions for the second compliance period at the conclusion of the first compliance period.

[11] As noted above, following the suspension, companies presently in the compliance process will remain at that same stage of the process.

[12] 15 U.S.C. 78f.

[13] 15 U.S.C. 78f(b)(5).

B. Self-Regulatory Organization's Statement on Burden on Competition

Nasdaq does not believe that the proposed rule change will result in any burden on competition that is not necessary or appropriate in furtherance of the purposes of the Act.

C. Self-Regulatory Organization's Statement on Comments on the Proposed Rule Change Received From Members, Participants, or Others

While written comments were not solicited about the proposed extension, there was one comment submitted by the Biotechnology Industry Organization on the original suspension of the bid price and market value of publicly held shares requirements, which supported the extension. That comment is described in footnote 6, above.

III. Date of Effectiveness of the Proposed Rule Change and Timing for Commission Action

Because the proposed rule change: (i) Does not significantly affect the protection of investors or the public interest; (ii) does not impose any significant burden on competition; and (iii) does not become operative for 30 days after the date of the filing, or such shorter time as the Commission may designate if consistent with the protection of investors and the public interest, the proposed rule change has become effective pursuant to Section 19(b)(3)(A) of the Act[14] and Rule 19b–4(f)(6) thereunder.[15]

At any time within 60 days of the filing of the proposed rule change, the Commission may summarily abrogate the rule change if it appears to the Commission that such action is necessary or appropriate in the public interest, for the protection of investors, or otherwise in furtherance of the purposes of the Act.

IV. Solicitation of Comments

Interested persons are invited to submit written data, views and arguments concerning the foregoing, including whether the proposed rule change is consistent with the Act. Comments may be submitted by any of the following methods:

[14] 15 U.S.C. 78s(b)(3)(A).

[15] 17 CFR 240.19b–4(f)(6). Pursuant to Rule 19b–4(f)(6)(iii) under the Act, the Exchange is required to give the Commission written notice of its intent to file the proposed rule change, along with a brief description and text of the proposed rule change, at least five business days prior to the date of filing of the proposed rule change, or such shorter time as designated by the Commission. The Exchange has requested that the Commission waive the 5-day pre-filing notice requirement. The Commission has determined to waive this requirement.

Electronic Comments

- Use the Commission's Internet comment form *(http://www.sec.gov/rules/sro.shtml);* or
- Send an e-mail to *rule-comments@sec.gov.* Please include File Number SR–NASDAQ–2008–099 on the subject line.

Paper Comments

- Send paper comments in triplicate to Elizabeth M. Murphy, Secretary, Securities and Exchange Commission, 100 F Street, NE., Washington, DC 20549–1090.

All submissions should refer to File Number SR–NASDAQ–2008–099. This file number should be included on the subject line if e-mail is used. To help the Commission process and review your comments more efficiently, please use only one method. The Commission will post all comments on the Commission's Internet Web site *(http://www.sec.gov/rules/sro.shtml).* Copies of the submission, all subsequent amendments, all written statements with respect to the proposed rule change that are filed with the Commission, and all written communications relating to the proposed rule change between the Commission and any person, other than those that may be withheld from the public in accordance with the provisions of 5 U.S.C. 552, will be available for inspection and copying in the Commission's Public Reference Room, on official business days between the hours of 10 a.m. and 3 p.m. Copies of the filing also will be available for inspection and copying at the principal office of the Exchange. All comments received will be posted without change; the Commission does not edit personal identifying information from submissions. You should submit only information that you wish to make available publicly. All submissions should refer to File Number SR–NASDAQ–2008–099 and should be submitted on or before February 5, 2009.

For the Commission, by the Division of Trading and Markets, pursuant to delegated authority.[16]

Florence E. Harmon,

Deputy Secretary.

[FR Doc. E9–778 Filed 1–14–09; 8:45 am]

BILLING CODE 8011–01–P

[16] 17 CFR 200.30–3(a)(12).

SOCIAL SECURITY ADMINISTRATION

Agency Information Collection Activities: Proposed Request and Comment Request

The Social Security Administration (SSA) publishes a list of information collection packages requiring clearance by the Office of Management and Budget (OMB) in compliance with Public Law (Pub. L.) 104–13, the Paperwork Reduction Act of 1995, effective October 1, 1995. This notice includes a revision to an OMB-approved information collection.

SSA is soliciting comments on the accuracy of the agency's burden estimate; the need for the information; its practical utility; ways to enhance its quality, utility, and clarity; and ways to minimize the burden on respondents, including the use of automated collection techniques or other forms of information technology. Mail, e-mail, or fax your comments and recommendations on the information collection(s) to the OMB Desk Officer and the SSA Reports Clearance Officer to the addresses or fax numbers listed below.

(OMB), Office of Management and Budget, *Attn:* Desk Officer for SSA, *Fax:* 202–395–6974, *E-mail address: OIRA_Submission@omb.eop.gov*.

(SSA), Social Security Administration, DCBFM, *Attn:* Reports Clearance Officer, 1332 Annex Building, 6401 Security Blvd., Baltimore, MD 21235, *Fax:* 410–965–6400, *E-mail address: OPLM.RCO@ssa.gov*.

I. The information collection below is pending at SSA. SSA will submit it to OMB within 60 days from the date of this notice. Therefore, your comments would be most helpful if you submit them to SSA within 60 days from the date of this publication. Individuals can obtain copies of the collection instrument by calling the SSA Reports Clearance Officer at 410–965–3758 or by writing to the e-mail address listed above.

1. *Physician's/Medical Officer's Statement of Patient's Capability to Manage Benefits—20 CFR 404.2015 and 416.615—0960–0024*. SSA uses the information collected on Form SSA–787 to determine an individual's capability to handle his or her own benefits. This information assists SSA in determining the need for a representative payee. The respondents are physicians of the beneficiaries' or medical officers of the institution in which the recipients reside.

Type of Request: Extension of an OMB-approved information collection.

Number of Respondents: 24,000.

Frequency of Response: 1.

Average Burden per Response: 15 minutes.

Estimated Annual Burden: 6,000 hours.

2. *Letter to Employer Requesting Wage Information—20 CFR 404.726—0960–0138*. SSA uses Form SSA–L4201 to collect information from employers to establish and/or verify wage information for Supplemental Security Income (SSI) claimants and recipients. SSA also uses the information to determine eligibility and proper payment for SSI. The respondents are employers of applicants for and recipients of SSI payments.

Type of Request: Extension of an OMB-approved information collection.

Number of Respondents: 133,000.

Frequency of Response: 1.

Average Burden per Response: 30 minutes.

Estimated Annual Burden: 66,500 hours.

3. *Statement of Living Arrangements, In-Kind Support and Maintenance—20 CFR 416.1130–416.1148—0960–0174*. SSA uses Form SSA–8006–F4 to establish in-kind support and maintenance for SSI applicants and recipients. A recipient's need is the basis for determining SSI payments. Need is measured, in part, by the amount of income an individual receives. Income includes in-kind support and maintenance in the form of food and shelter provided by other persons. Form SSA–8006–F4 collects information to ensure that recipients are eligible to receive SSI payments and to determine the correct amount of payments due. The information permits SSA Administrative Law Judges to determine the income value of in-kind support and maintenance received by SSI applicants and recipients. The respondents are individuals who apply for SSI payments, or complete an SSI eligibility redetermination.

Type of Request: Extension of an OMB-approved information collection.

Number of Respondents: 173,380.

Frequency of Response: 1.

Average Burden per Response: 7 minutes.

Estimated Annual Burden: 20,228 hours.

4. *Supplemental Security Income (SSI) Claim Information Notice—20 CFR 416.210—0960–0324*. SSA uses Form SSA–L8050–U3 to collect information on whether an SSI recipient is using all sources of potential income for his or her own support. SSI supplements other income an individual has available. Respondents are SSI applicants or recipients who may be eligible for benefits from public or private programs.

Type of Request: Extension of an OMB-approved information collection.

Number of Respondents: 7,500.

Frequency of Response: 1.

Average Burden per Response: 10 minutes.

Estimated Annual Burden: 1,250 hours.

5. *Permanent Residence Under Color of the Law (PRUCOL)—20 CFR 416.1615 and 416.1618—0960–0451*. As discussed in SSA regulations at 20 CFR 416.1415 and 416.1618, a PRUCOL alien must present evidence of his/her alien status at application and periodically thereafter as part of the eligibility determination process for SSI. SSA verifies the validity of the evidence of PRUCOL for grandfathered nonqualified aliens with the Department of Homeland Security (DHS). Based on the DHS response, SSA will determine whether the individual is PRUCOL. Without this information, SSA is unable to determine whether the individual is eligible for SSI payments. The respondents are individuals who have alien status and live in the United Sates.

Type of Request: Extension of an OMB-approved information collection.

Number of Respondents: 1,300.

Frequency of Response: 1.

Average Burden per Response: 5 minutes.

Estimated Annual Burden: 108 hours.

6. *QuickStart Automated Enrollment System—31 CFR 210—0960–0564*. The financial institutions (FIs) collect Direct Deposit (DD)/Electronic Funds Transfer (EFT) information from their depositors who are enrolling for the first time, or who are changing DD/EFT information. Information needed to enroll under QuickStart is included in the Department of Treasury's Green Book, which is available online. The Department of Treasury's Green Book provides the data elements the recipient completes in order to enroll in direct deposit. The recipient submits the DD/EFT information electronically; therefore, it is not an SSA-prescribed form used to send information to Government agencies. SSA collects this information to facilitate electronic payment of funds. The respondents are Social Security, SSI recipients, and their FIs.

Type of Request: Extension of an OMB-approved information collection.

Number of Respondents: 3,950,000.

Frequency of Response: 1.

Average Burden per Response: 3 minutes.

Estimated Annual Burden: 197,500 hours.

7. Certification of Low Birth Weight for SSI Eligibility of Funds You Provided to Another and Statement of

Funds You Received—20 CFR 416.931, 416.926a(m), (7) *and* (8) and 416.924—0960–0720. Form SSA–3830 assists hospitals and claimants who file on behalf of children in providing local field offices (FOs) and Disability Determination Services (DDSs) with medical information for determining disability of low birth weight infants. FOs use the forms as protective filing statements, and the medical information for making presumptive disability findings, which allow expedited payment to eligible claimants. DDSs use the medical information to determine disability and the most appropriate continuing disability review diaries. The respondents are hospitals that have information identifying low birth weight babies and medical conditions those babies may have.

Type of Request: Extension of an OMB-approved information collection.

Number of Respondents: 24,000.

Frequency of Response: 1.

Average Burden per Response: 15 minutes.

Estimated Annual Burden: 6,000 hours.

II. SSA has submitted the information collections listed below to OMB for clearance. Your comments on the information collections would be most useful if received by OMB and SSA within 30 days from the date of this publication. You can obtain a copy of the OMB clearance packages by calling the SSA Reports Clearance Officer at 410–965–3758, or by writing to the above listed address.

1. *Application for Mother's or Father's Insurance Benefits—20 CFR 404.339–404.342, 20 CFR 404.601–404.603—0960–0003.* The Social Security Act provides for the payment of monthly benefits to the widow or widower of an insured individual if the surviving spouse is caring for the deceased worker's child who is entitled to Social Security benefits. SSA uses the information collected on Form SSA–5–F6 to entitle an individual to their mother's or father's insurance benefits under the Old Age, Survivors and Disability Insurance (OASDI) program.

SSA published this information collection in the 60-day **Federal Register** Notice on October 27, 2008 at FR 63761 as an extension of an OMB-approved information collection. Since then SSA made revisions and has changed the type of request to a revision to an OMB-approved information collection.

Type of Request: Revision of an OMB-approved information collection.

Collection method	Number of respondents	Estimated completion time (minutes)	Burden hours
MCS	26,045	15	6,511
MCS/Signature Proxy	26,044	14	6,077
Paper	1,611	15	403
Totals	53,700		12,991

2. *Supplement to Claim of Person Outside the United States—20 CFR 404.460, 404.463, 422.505(b), 42 CFR 407.27(c)—0960–0051.* SSA uses the information it collects on Form SSA–21 to determine continuing entitlement to Social Security benefits and the proper benefit amounts of alien beneficiaries living outside the United States. SSA also uses the information to determine whether benefits are subject to withholding tax. The respondents are individuals entitled to Social Security benefits who are, will be, or have been residing outside the United States.

Type of Request: Revision of an OMB approved information collection.

Number of Respondents: 35,000.

Frequency of Response: 1.

Average Burden per Response: 10 minutes.

Estimated Annual Burden: 5,833 hours.

3. *Coverage of Employees of State and Local Governments—20 CFR 404, Subpart M—0960–0425.* The Code of Federal Regulations at 20 CFR 404, Subpart M prescribes the rules for states submitting reports of deposits and related recordkeeping to SSA. States (and interstate instrumentalities) are required to provide wage and deposit-related contribution information for pre-1987 periods. The respondents are state and local governments or interstate instrumentalities.

Type of Request: Extension of an OMB-approved information collection.

Number of Respondents: 52.

Frequency of Response: 1.

Average Burden per Response: 1 hour.

Estimated Annual Burden: 52 hours.

4. *Marital Relationship Questionnaire—20 CFR 416.1826—0960–0460.* SSA collects information on Form SSA–4178 to determine, for SSI purposes, whether unrelated individuals of the opposite sex who live together are holding themselves out to the public as husband and wife. SSA needs this information to determine whether we are making correct payments to SSI couples and individuals. The respondents are applicants for and recipients of SSI payments.

Type of Request: Extension of an OMB-approved information collection.

Number of Respondents: 5,100.

Frequency of Response: 1.

Average Burden per Response: 5 minutes.

Estimated Annual Burden: 425 hours.

5. *Medical Report on Child with Allegation of Human Immunodeficiency Virus Infection—20 CFR 416.993–416–994—0960–0500.* SSA uses Forms SSA–4814–F5 and SSA–4815–F6 to collect information necessary to determine if an individual with Human Immunodeficiency Virus (HIV) infection who is applying for SSI disability benefits, meets the requirements for presumptive disability payments. The respondents are the medical sources of the applicants for SSI disability payments.

Type of Request: Revision of an OMB-approved information collection.

Number of Respondents: 59,100.

Frequency of Response: 1.

Average Burden per Response: 10 minutes.

Estimated Annual Burden: 9,850.

6. *Public Information Campaign—0960–0544.* Periodically, SSA sends various public information materials, including public service announcements, news releases, and educational tapes, to public broadcasting systems so they can inform the public about various programs and activities conducted by SSA. SSA will frequently send follow-up business reply cards for these public information materials to obtain suggestions for improving them. The respondents are media sources who have received public information campaign materials (*e.g.,* broadcast television and radio media sources).

Type of Request: Extension of an OMB-approved information collection.

Number of Respondents: 6,000.

Frequency of Response: 2.

Average Burden per Response: 1 minute.

Estimated Annual Burden: 200 hours.

7. *Application to Collect a Fee for Payee Services—416.640.640(a), 416.1103(f)—0960–0719.* SSA uses information it collects on Form SSA–445 to determine whether to authorize or deny permission to collect fees for payee services. The respondents are private sector businesses or state and local government offices applying to become a fee-for-service organizational representative payee. SSA published this information collection in the 60-day **Federal Register** Notice on September 17, 2008 at FR 53919 as an extension of an OMB-approved information collection. Since then SSA made revisions and has changed the type of request to a revision to an OMB-approved information collection.

Type of Request: Revision to an OMB-approved information collection.

Number of Respondents: 100.

Frequency of Response: 1.

Average Burden per Response: 10 minutes.

Estimated Annual Burden: 17 hours.

Dated: January 8, 2009.

John Biles,

Reports Clearance Officer, Center for Reports Clearance, Social Security Administration.

[FR Doc. E9–596 Filed 1–14–09; 8:45 am]

BILLING CODE 4191–02–P

DEPARTMENT OF STATE

[Public Notice 6481]

Culturally Significant Objects Imported for Exhibition Determinations: ''Genghis Khan''

SUMMARY: Notice is hereby given of the following determinations: Pursuant to the authority vested in me by the Act of October 19, 1965 (79 Stat. 985; 22 U.S.C. 2459), Executive Order 12047 of March 27, 1978, the Foreign Affairs Reform and Restructuring Act of 1998 (112 Stat. 2681, *et seq.*; 22 U.S.C. 6501 note, *et seq.*), Delegation of Authority No. 234 of October 1, 1999, Delegation of Authority No. 236 of October 19, 1999, as amended, and Delegation of Authority No. 257 of April 15, 2003 [68 FR 19875], I hereby determine that the objects in the exhibition: ''Genghis Khan,'' imported from abroad for temporary exhibition within the United States, are of cultural significance. The objects are imported pursuant to a loan agreement with the foreign owner or custodian. I also determine that the exhibition or display of the exhibit objects at the Houston Museum of National Science, Houston, TX, from on or about February 28, 2009, until on or about September 7, 2009; Denver Museum of Nature and Science, Denver, CO, from on or about October 10, 2009, until on or about February 7, 2010, and at possible additional exhibitions or venues yet to be determined, is in the national interest. Public Notice of these Determinations is ordered to be published in the **Federal Register**.

FOR FURTHER INFORMATION CONTACT: For further information, including a list of the exhibit objects, contact Julie Simpson, Attorney-Adviser, Office of the Legal Adviser, U.S. Department of State (telephone: (202–453–8050)). The address is U.S. Department of State, SA–44, 301 4th Street, SW., Room 700, Washington, DC 20547–0001.

Dated: January 6, 2009.

C. Miller Crouch,

Principal Deputy Assistant Secretary for Educational and Cultural Affairs, Department of State.

[FR Doc. E9–657 Filed 1–14–09; 8:45 am]

BILLING CODE 4710–05–P

DEPARTMENT OF STATE

[Public Notice 6482]

Culturally Significant Objects Imported for Exhibition Determinations: ''The El Peru-Waka Archaeological Project''

SUMMARY: Notice is hereby given of the following determinations: Pursuant to the authority vested in me by the Act of October 19, 1965 (79 Stat. 985; 22 U.S.C. 2459), Executive Order 12047 of March 27, 1978, the Foreign Affairs Reform and Restructuring Act of 1998 (112 Stat. 2681, *et seq.*; 22 U.S.C. 6501 note, *et seq.*), Delegation of Authority No. 234 of October 1, 1999, Delegation of Authority No. 236 of October 19, 1999, as amended, and Delegation of Authority No. 257 of April 15, 2003 [68 FR 19875], I hereby determine that the objects to be included in the exhibition ''The El Peru-Waka Archaeological Project,'' imported from abroad for temporary exhibition within the United States, are of cultural significance. The objects are imported pursuant to loan agreements with the foreign owners or custodians. I also determine that the exhibition or display of the exhibit objects at the Kimbell Art Museum, Fort Worth, TX, from on or about July 19, 2009, until on or about December 6, 2009, and at possible additional exhibitions or venues yet to be determined, is in the national interest. Public Notice of these Determinations is ordered to be published in the **Federal Register**.

FOR FURTHER INFORMATION CONTACT: For further information, including a list of the exhibit objects, contact Carol B. Epstein, Attorney-Adviser, Office of the Legal Adviser, U.S. Department of State (telephone: 202/453–8048). The address is U.S. Department of State, SA–44, 301 4th Street, SW., Room 700, Washington, DC 20547–0001.

Dated: January 6, 2009.

C. Miller Crouch,

Principal Deputy Assistant Secretary for Educational and Cultural Affairs, Department of State.

[FR Doc. E9–660 Filed 1–14–09; 8:45 am]

BILLING CODE 4710–05–P

DEPARTMENT OF STATE

[Public Notice 6483]

Culturally Significant Objects Imported for Exhibition Determinations: ''Wine, Worship and Sacrifice: The Golden Graves of Ancient Vani''

AGENCY: Department of State.

ACTION: Notice, correction.

SUMMARY: On October 11, 2007, notice was published on page 57987 of the **Federal Register** (volume 72, number 196) of determinations made by the Department of State pertaining to the exhibition ''Wine, Worship and Sacrifice: The Golden Graves of Ancient Vani.'' On December 27, 2007, the referenced notice was corrected on page 73415 of the **Federal Register** (volume 72, number 247) as to two additional objects to be included in the exhibition. The referenced notice is again corrected here as to two additional objects to be included in the exhibition. Notice is hereby given of the following determinations: Pursuant to the authority vested in me by the Act of October 19, 1965 (79 Stat. 985; 22 U.S.C. 2459), Executive Order 12047 of March 27, 1978, the Foreign Affairs Reform and Restructuring Act of 1998 (112 Stat. 2681, *et seq.*; 22 U.S.C. 6501 note, *et seq.*), Delegation of Authority No. 234 of October 1, 1999, Delegation of Authority No. 236 of October 19, 1999, as amended, and Delegation of Authority No. 257 of April 15, 2003 [68 FR 19875], I hereby determine that the objects to be included in the exhibition ''Wine, Worship and Sacrifice: The Golden Graves of Ancient Vani,'' imported from abroad for temporary exhibition within the United States, are of cultural significance. The objects are imported pursuant to loan agreements with the foreign owners or custodians. I also

determine that the exhibition or display of the exhibit objects at the Getty Villa, Malibu, CA, from on or about July 16, 2009, until on or about February 8, 2010, and at possible additional exhibitions or venues yet to be determined, is in the national interest. Public Notice of these Determinations is ordered to be published in the **Federal Register**.

FOR FURTHER INFORMATION CONTACT: For further information, including a list of the exhibit objects, contact Carol B. Epstein, Attorney-Adviser, Office of the Legal Adviser, U.S. Department of State (telephone: 202/453–8048). The address is U.S. Department of State, SA–44, 301 4th Street, SW., Room 700, Washington, DC 20547–0001.

C. Miller Crouch,

Principal Deputy Assistant Secretary for Educational and Cultural Affairs, Department of State.

[FR Doc. E9–655 Filed 1–14–09; 8:45 am]

BILLING CODE 4710–05–P

DEPARTMENT OF TRANSPORTATION

Federal Aviation Administration

Noise Exposure Map and Noise Compatibility Program Notice for General Mitchell International Airport, Milwaukee, WI

AGENCY: Federal Aviation Administration, DOT.

ACTION: Notice.

SUMMARY: The Federal Aviation Administration (FAA) announces its determination that the noise exposure maps submitted by General Mitchell International Airport under the provisions of Title I of the Aviation Safety and Noise Abatement Act of 1979 (Pub. L. 96–193) and 14 CFR Part 150 are in compliance with applicable requirements. The FAA also announces that it is reviewing a proposed noise compatibility program that was submitted for General Mitchell International Airport under Part 150 in conjunction with the noise exposure map, and that this program will be approved or disapproved on or before June 21, 2009.

DATES: *Effective Date:* The effective date of the FAA'S determination on the noise exposure maps and of the start of its review of the associated noise compatibility program is December 24, 2008. The public comment period ends February 21, 2009.

FOR FURTHER INFORMATION CONTACT: Mr. Glen Orcutt, Federal Aviation Administration, Minneapolis Airport District Office, 6020 28th Ave., South, Minneapolis, MN 55450, phone number (612) 713–4354. Comments on the proposed noise compatibility program should also be submitted to the above office.

SUPPLEMENTARY INFORMATION: This notice announces that the FAA finds that the noise exposure maps submitted for General Mitchell International Airport are in compliance with applicable requirements of Part 150, effective December 24, 2008. Further, FAA is reviewing a proposed noise compatibility program for that airport which will be approved or disapproved on or before June 21, 2009. This notice also announces the availability of this program for public review and comment.

Under § 103 of Title I of the Aviation Safety and Noise Abatement Act of 1979 (hereinafter referred to as ''the Act''), an airport operator may submit to the FAA noise exposure maps which meet applicable regulations and which depict non-compatible land uses as of the date of submission of such maps, a description of projected aircraft operations, and the ways in which such operations will affect such maps. The Act requires such maps to be developed in consultation with interested and affected parties in the local community, government agencies, and persons using the airport.

An airport operator who has submitted noise exposure maps that are found by FAA to be in compliance with the requirements of Federal Aviation Regulations (FAR) Part 150, promulgated pursuant to Title I of the Act, may submit a noise compatibility program for FAA approval which sets forth the measures the operator has taken or proposes to take to reduce existing non-compatible uses and prevent the introduction of additional non-compatible uses.

The General Mitchell International Airport submitted to the FAA on March 31, 2008 noise exposure maps, descriptions and other documentation that were produced during the FAR Part 150 Noise Compatibility Study Update. A final copy of the study was submitted to the FAA on December 17, 2008. It was requested that the FAA review this material as the noise exposure maps, as described in § 103(a)(1) of the Act, and that the noise mitigation measures, to be implemented jointly by the airport and surrounding communities, be approved as a noise compatibility program under § 104(b) of the Act.

The FAA has completed its review of the noise exposure maps and related descriptions submitted by the General Mitchell International Airport. The specific documentation determined to constitute the noise exposure maps includes: Existing 2004 Noise Exposure Map (Figure D21) and Future 2009 Noise Exposure Map (Figure I1) on pages D44 and 14 of the Noise Compatibility Program. The FAA has determined that these maps for General Mitchell International Airport are in compliance with applicable requirements. This determination is effective on December 24, 2008. FAA's determination on an airport operator's noise exposure maps is limited to a finding that the maps were developed in accordance with the procedures contained in appendix A of FAR Part 150. Such determination does not constitute approval of the applicant's data, information or plans, or constitute a commitment to approve a noise compatibility program or to fund the implementation of that program.

If questions arise concerning the precise relationship of specific properties to noise exposure contours depicted on a noise exposure map submitted under § 103 of the Act, it should be noted that the FAA is not involved in any way in determining the relative locations of specific properties with regard to the depicted noise contours, or in interpreting the noise exposure maps to resolve questions concerning, for example, which properties should be covered by the provisions of § 107 of the Act. These functions are inseparable from the ultimate land use control and planning responsibilities of local government. These local responsibilities are not changed in any way under Part 150 or through FAA's review of noise exposure maps. Therefore, the responsibility for the detailed overlaying of noise exposure contours onto the map depicting properties on the surface rests exclusively with the airport operator that submitted those maps, or with those public agencies and planning agencies with which consultation is required under § 103 of the Act. The FAA has relied on the certification by the airport operator, under § 150.21 of FAR Part 150, that the statutorily required consultation has been accomplished.

The FAA has formally received the noise compatibility program for General Mitchell International Airport, also effective on December 24, 2008. Preliminary review of the submitted material indicates that it conforms to the requirements for the submittal of noise compatibility programs, but that further review will be necessary prior to approval or disapproval of the program. The formal review period, limited by

law to a maximum of 180 days, will be completed on or before June 21, 2009.

The FAA'S detailed evaluation will be conducted under the provisions of 14 CFR Part 150, § 150.33. The primary considerations in the evaluation process are whether the proposed measures may reduce the level of aviation safety, create an undue burden on interstate or foreign commerce, or be reasonably consistent with obtaining the goal of reducing existing non-compatible land uses and preventing the introduction of additional non-compatible land uses.

Interested persons are invited to comment on the proposed program with specific reference to these factors. All comments, other than those properly addressed to local land use authorities, will be considered by the FAA to the extent practicable. Copies of the noise exposure maps, the FAA's evaluation of the maps, and the proposed noise compatibility program are available for examination at the following locations:

Federal Aviation Administration, Minneapolis Airport District Office, 6020 28th Ave., South, Minneapolis, MN 55450.

General Mitchell International Airport, 5300 South Howell Avenue, Milwaukee, WI 53207.

Questions may be directed to the individual named above under the heading, **FOR FURTHER INFORMATION CONTACT**.

Issued in Minneapolis, Minnesota, December 24, 2008.

Robert Huber,

Manager, Minneapolis Airports District Office, FAA Great Lakes Region.

[FR Doc. E9–535 Filed 1–14–09; 8:45 am]

BILLING CODE 4910–12–M

DEPARTMENT OF TRANSPORTATION

Federal Aviation Administration

[Docket No. FAA–2006–25755]

Operating Limitations at New York's LaGuardia Airport; Notice of Order

AGENCY: Federal Aviation Administration (FAA), DOT.

ACTION: Notice of Amendment to Order.

SUMMARY: The Federal Aviation Administration (FAA) is amending its December 12, 2006 Order, which temporarily capped the scheduled operations at New York's LaGuardia Airport (LaGuardia) pending the implementation of a longer-term regulation to manage congestion there. In particular, we are amending the Order to move toward an hourly limit of 71 operations from 6 a.m. through 9:59 p.m., Eastern Time, Monday through Friday, and 12 noon through 9:59 p.m., Eastern Time, on Sunday. To move toward this new hourly limit, we do not through this amendment force air carriers to relinquish Operating Authorizations at the airport. Instead, the FAA will accept voluntary flight reductions for the duration of the Order, whereupon the FAA will retire the surrendered Operating Authorizations until an hourly average of 71 scheduled operations is achieved. In the event that the current final rule takes effect, that rule would impose a reduction in scheduled service using the air carriers' base of operations during the week of September 28, 2008. The FAA published that rule on October 10, 2008, and it is presently stayed pending judicial review. If it proves necessary to require a reduction in scheduled operations through a future amendment of the Order, air carriers that voluntarily surrender Operating Authorizations under this initiative will be credited with voluntary schedule reductions that they commit to on or before February 2, 2009.

The FAA will accept voluntarily offered schedule reductions through February 2, 2009, and expects air carriers to suspend service at LaGuardia under this arrangement on or before May 31, 2009. The FAA separately extended the Order's expiration until 11:59 p.m., Eastern Time, on October 24, 2009.[1]

If you wish to review the background documents or comments received in relation to this amendment, you may go to *http://www.regulations.gov* at any time and follow the online instructions for accessing the electronic docket. You may also go to the U.S. Department of Transportation's Docket Operations in Room W12–140 on the ground floor of the West Building at 1200 New Jersey Avenue, SE., Washington, DC, between 9 a.m. and 5 p.m., Eastern Time, Monday through Friday, except Federal holidays.

DATES: This amendment is effective on the date of publication.

FOR FURTHER INFORMATION CONTACT: Gerry Shakley, System Operations Services, Air Traffic Organization; telephone—(202) 267–9424; e-mail—*gerry.shakley@faa.gov.*

SUPPLEMENTARY INFORMATION:

I. Background

The FAA briefly outlined the history of congestion at LaGuardia and the FAA's management of the problem in the proposal for these amendments.[2] The problem, stated succinctly, is that the current cap of 75 scheduled operations per hour is very close to the maximum throughput for LaGuardia's two-runway configuration in optimal meteorological and operational conditions. If there are delays due to adverse weather or other operational reasons, a limit of 75 scheduled operations simply does not permit the airport a significant opportunity to recover, often consigning the airport to delays for the rest of the day.

The FAA's experience in managing congestion at other airports reflects that scheduled service short of maximum airport throughput permits needed flexibility to restore the schedule in many instances when the airport falls behind the published schedules. The FAA's proposal and this amendment are intended to give LaGuardia an additional margin of operational flexibility, providing increased reliability for passengers and others who depend on efficient air transportation. Depending on the air carriers' response to this initiative, LaGuardia passengers and air carriers can expect varying levels of relief from congestion-related delay.

II. Discussion of the Written Submissions

A. An Hourly Cap of 71 Scheduled Operations at LaGuardia Strikes an Appropriate Balance Between Airport Throughput and Operational Efficiency

The Port Authority of New York and New Jersey (Port Authority) contends that evidence is lacking that the currently hourly cap of 75 scheduled operations is too high. Instead, the Port Authority advocates that the FAA focus exclusively on operational improvements that might incrementally increase the maximum throughput of the airport's two-runway configuration.

Contrary to the Port Authority's intimation, the FAA continues to advance short-, intermediate-, and long-term initiatives that will improve LaGuardia's operating efficiency. The FAA achieved many such initiatives in 2008 and will field many more in 2009. There are limits to the gains that can be achieved at LaGuardia, given the airport's physical constraints, however. Over the near term while the Order remains in effect, these operational improvements will not make an hourly rate of 75 scheduled operations consistently achievable on an average day. Accordingly, the FAA determined that a modest, voluntary operational cut

[1] 74 FR 845 (Jan. 8, 2009).

[2] 73 FR 79,201 (Dec. 24, 2008).

merited enough consideration to solicit the public's comments.

The Port Authority also asserts that LaGuardia's on-time performance has recently improved, negating the need for a reduction in scheduled operations. In particular, the Port Authority points to the airport's performance in 2008, which was slightly better than its performance in 2007.

LaGuardia's on-time performance in 2007 was the airport's second worst performance in its history, falling only behind 2000, when operations at LaGuardia were nearly unconstrained. As a result, a modest improvement in 2008, while noteworthy, does not make the airport objectively efficient. Indeed, the comments received on the FAA's proposal do not bear out the Port Authority's assertion. None of the air carrier and passenger interest commenters expressed satisfaction with LaGuardia's current performance. To the contrary, such commenters uniformly expressed at least general support for the FAA effort to improve LaGuardia's operational efficiency through operational reductions. Moreover, one air carrier expressed concern that the FAA's effort to trim LaGuardia to 71 hourly scheduled operations does not cut deeply enough. The FAA is satisfied that its proposal to reduce scheduled operations at the airport through the end of the Order is appropriate.[3]

B. The Suggested Variations on the FAA's Proposal Would Have Undesirable Consequences

Three air carrier commenters—Delta Air Lines, U.S. Airways, and Midwest Airlines—contend that adjustments to the FAA's proposal might generate additional operational reductions. Among the alternatives, one or more of these carriers suggest a temporary waiver of the Order's use-or-lose provisions for the duration of the Order. They also suggest that the FAA state that it could return the Operating Authorizations to the air carrier that surrenders it at or before the conclusion of the Order.

The FAA has rarely afforded air carriers a temporary waiver of the use-or-lose requirements associated with the operating authority at capacity-constrained airports. The rare instances have typically resulted from unpredictable circumstances that make it unreasonable to expect usage at or above the minimum 80% threshold. The problem with such a program in the present context is that there is no simple way to limit its effect with any precision. In an environment in which many air carriers may be interested in initiating service at LaGuardia, the most problematic result could be an underutilization of the existing airport capacity coupled with an inability to permit new entrant service. This result, too, would be an inefficient use of airport capacity and perhaps the only result that would be worse than overutilization.

The suggestion that the FAA should promise to return the surrendered Operating Authorization to the surrendering air carriers is equally problematic. Most or all the air carrier and passenger interest commenters recognize that a reduction in the hourly cap at LaGuardia is necessary to reduce congestion-related delay. The airport's delay statistics reflect that it is significantly overscheduled, and the air carriers would ideally participate proportionally in correcting the situation without any promise of future enrichment. If the FAA must force reductions in service at a later date, it will do so; however, it would be disingenuous at this point to permit an impression that LaGuardia will soon return to 75 scheduled operations per hour.

Delta Air Lines also suggests that, in lieu of the proposed reduction in scheduled operations, the FAA should make further reductions in the hourly operations of unscheduled operations. The FAA recently halved, from 6 to 3, the number of hourly Operating Authorizations available for unscheduled operations at LaGuardia during peak hours.[4] We do not agree that a further reduction in unscheduled operations is appropriate at this time.

C. The FAA Anticipates That Any Voluntary Reductions Under the Order Could Be Credited Toward a Future, Required Schedule Reduction at LaGuardia

American Airlines proposes that the FAA should credit an air carrier with any voluntary reductions the carrier makes in its scheduled operations in the event that a future mandatory schedule reduction at LaGuardia is necessary. Delta Air Lines opposes the suggestion.

The final rule related to scheduled operations at LaGuardia, which is currently stayed pending judicial review, called for a reduction in scheduled operations at LaGuardia to 71 per hour. If the relevant portion of the final rule ultimately goes into effect, the FAA's proposal to amend the Order noted that the rule would draw such reductions from each air carrier's base of operations at LaGuardia during the week of September 28, 2008. This provision of the rule would effectively restore the operations voluntarily discontinued under this amendment for the purpose of the withdrawal required by the October 10, 2008, final rule.

In the event that the portion of the October 10 rule reducing scheduled operations at LaGuardia does not go into effect, however, it remains possible that the FAA will further extend the duration of this Order and propose a mandatory mechanism to reduce the hourly scheduled operations at LaGuardia. Should mandatory operational reductions occur under a future amendment to this Order, any air carrier that voluntarily reduces its scheduled operations under this amendment to the Order will receive credit for the voluntary reductions that it takes now. Should a future reduction in LaGuardia's scheduled operations take place under a new rulemaking action, the FAA also anticipates that credit for an air carrier's current, voluntary schedule reductions would be afforded there, as well. The FAA recognizes that to do otherwise would tend to discourage air carriers from voluntarily contributing to an undertaking that the air carrier commenters agree will bring a needed improvement to the efficient operation of the airport.

III. The Final Amendment

The FAA is amending paragraph A.1 of the Order's ordering language to reflect that 71 hourly Operating Authorizations are available for scheduled service during the specified peak operating hours at LaGuardia. In order to move from the current level of scheduled service toward the reduced level, the FAA will accept from air carriers voluntary reductions in scheduled service at LaGuardia. We will retire the surrendered Operating Authorizations we receive until we attain the new average hourly rate of scheduled service. To preserve antitrust principles during the voluntary reduction process, a carrier's identification of Operating Authorizations for voluntary reduction may not be contingent on specific flight reductions made by other carriers.

As we originally proposed, if there is a reduction in scheduled service below an average of 71 hourly operations, the FAA may elect to reallocate Operating Authorizations in order to maintain an

[3] The Port Authority also notes that, in contrast to the FAA's proposal, the FAA's 2004 airport benchmark report concluded that 75 scheduled operations per hour was within an appropriate range for LaGuardia. As American Airlines observes in its supplemental comments, LaGuardia's performance receded markedly after 2004 before improving modestly in 2008.

[4] 73 FR 48,428 (Aug. 19, 2008).

hourly average of 71 scheduled operations. In reaching and maintaining this level, the FAA will retire Operating Authorizations in the order in which the air carriers' commitments to reduce service are received and will notify an air carrier if any Operating Authorization that it is voluntarily offering to relinquish could be subject to reallocation. The FAA also notes that paragraphs A.6 and A.7 of the ordering paragraphs related to minimum usage requirements and the associated reallocation principles continue to apply to all Operating Authorizations that are not surrendered to the FAA and retired.

In order to receive credit for the voluntary reduction in the future, an air carrier must present its offer to reduce scheduled service at LaGuardia no later than February 2, 2009. If an air carrier wishes to offer a voluntary reduction in scheduled service at LaGuardia, an authorized representative of the carrier must contact the individual identified in the **FOR FURTHER INFORMATION CONTACT** section of this document. In addition, air carriers must return all voluntarily surrendered Operating Authorizations to the FAA no later than May 31, 2009.

Accordingly, paragraph A.1 of the FAA's December 27, 2006 order limiting operations at LaGuardia, as previously amended, is amended as follows:

1. The final Order governs scheduled arrivals and departures, except helicopters, at LaGuardia from 6 a.m. through 9:59 p.m., Eastern Time, Monday through Friday, and from 12 noon through 9:59 p.m., Eastern Time, Sunday. Seventy-one (71) Operating Authorizations are available per hour and will be assigned by the FAA on a 30-minute basis. The FAA will permit additional, existing operations above this threshold; however, the FAA will retire Operating Authorizations that are surrendered to the FAA, withdrawn for non-use, or unassigned during each affected hour until the number of Operating Authorizations in that hour reaches seventy-one (71).

Issued in Washington, DC, on January 12, 2009.

Kerry B. Long,

Chief Counsel, Federal Aviation Administration.

[FR Doc. E9–817 Filed 1–14–09; 8:45 am]

BILLING CODE 4910–13–P

DEPARTMENT OF TRANSPORTATION

Federal Aviation Administration

[Summary Notice No. PE–2009–05]

Petition for Exemption; Summary of Petition Received

AGENCY: Federal Aviation Administration (FAA), DOT.

ACTION: Notice of petition for exemption received.

SUMMARY: This notice contains a summary of a petition seeking relief from specified requirements of 14 CFR. The purpose of this notice is to improve the public's awareness of, and participation in, this aspect of FAA's regulatory activities. Neither publication of this notice nor the inclusion or omission of information in the summary is intended to affect the legal status of the petition or its final disposition.

DATE: Comments on this petition must identify the petition docket number involved and must be received on or before February 4, 2009.

ADDRESSES: You may send comments identified by Docket Number FAA–2008–1333 using any of the following methods:

- *Government-wide rulemaking Web site:* Go to *http://www.regulations.gov* and follow the instructions for sending your comments electronically.
- *Mail:* Send comments to the Docket Management Facility; U.S. Department of Transportation, 1200 New Jersey Avenue, SE., West Building Ground Floor, Room W12–140, Washington, DC 20590.
- *Fax:* Fax comments to the Docket Management Facility at 202–493–2251.
- *Hand Delivery:* Bring comments to the Docket Management Facility in Room W12–140 of the West Building Ground Floor at 1200 New Jersey Avenue, SE., Washington, DC, between 9 a.m. and 5 p.m., Monday through Friday, except Federal holidays.

Privacy: We will post all comments we receive, without change, to *http://www.regulations.gov,* including any personal information you provide. Using the search function of our docket Web site, anyone can find and read the comments received into any of our dockets, including the name of the individual sending the comment (or signing the comment for an association, business, labor union, etc.). You may review DOT's complete Privacy Act Statement in the **Federal Register** published on April 11, 2000 (65 FR 19477–78).

Docket: To read background documents or comments received, go to *http://www.regulations.gov* at any time or to the Docket Management Facility in Room W12–140 of the West Building Ground Floor at 1200 New Jersey Avenue, SE., Washington, DC, between 9 a.m. and 5 p.m., Monday through Friday, except Federal holidays.

FOR FURTHER INFORMATION CONTACT: Ralen Gao, Office of Rulemaking, ARM–209, Federal Aviation Administration, 800 Independence Avenue, SW., Room 810, Washington, DC 20591, fax 202–267–5075, telephone 202–267–3168. This notice is published pursuant to 14 CFR 11.85.

Issued in Washington, DC, on December 8, 2009.

Pamela Hamilton-Powell,

Director, Office of Rulemaking.

Petition for Exemption

Docket No.: FAA–2008–1333.

Petitioner: Worldwide Aeros Corp.

Section of 14 CFR Affected: 14 CFR 21.135.

Description of Relief Sought: Worldwide Aeros Corp. (Aeros) seeks an exemption to allow Aeros to perform initial airship inflation and flight testing at an especially large hangar facility that is not part of the Aeros primary manufacturing facility.

[FR Doc. E9–711 Filed 1–14–09; 8:45 am]

BILLING CODE 4910–13–P

DEPARTMENT OF TRANSPORTATION

Federal Highway Administration

[Docket No. FHWA–2009–0001]

Emergency Temporary Closure of I–395 & I–66 in the Commonwealth of Virginia

AGENCIES: Federal Highway Administration (FHWA), DOT.

ACTION: Announcement for the Virginia Department of Transportation to temporarily close I–395 & I–66 on January 20, 2009, for safety and security purposes for the Inauguration of the President of the United States.

SUMMARY: Pursuant to section 658.11 of title 23, Code of Federal Regulations, the Virginia Department of Transportation (VDOT) has requested approval of a plan to temporarily close segments of the Interstate to all traffic except buses and authorized vehicles—I–395 (between the Capital Beltway and the District of Columbia (DC) line) and I–66 (between the Capital Beltway and the DC line)—on January 20, 2009, beginning at 12 a.m., for one consecutive 24-hour period because of the Presidential Inauguration. The

request has been made for the purposes of safety and security in and around the District of Columbia and as a complementary piece of the DC DOT traffic management plan.

The Interstate routes included in the request are part of the National Network of highways that can safely and efficiently accommodate the large vehicles authorized by provisions of the Surface Transportation Assistance Act of 1982 (STAA), as amended, designated in accordance with 23 CFR Part 658 and listed in Appendix A. This regulation limits the authority of the States to restrict the access of these commercial motor vehicles to the designated National Routes, and requires the approval of the FHWA for additions, deletions, exceptions and restrictions in accordance with 23 CFR 658.11.

The FHWA has decided to approve the request by the VDOT as an emergency deletion in accordance with section 658.11(e) due to the safety considerations discussed in this notice. The FHWA is requesting comments from the general public on this determination.

DATES: Comments must be received on or before January 16, 2009.

ADDRESSES: The letter of request along with justifications can be viewed electronically at the docket established for this rulemaking at *http://www.regulations.gov.* Hard copies of the documents will also be available for viewing at the DOT address listed below.

Mail or hand deliver comments to the U.S. Department of Transportation, Dockets Management Facility, Room W12–140, 1200 New Jersey Avenue, SE., Washington, DC 20590, or submit comments electronically at *http://www.regulations.gov,* or fax comments to (202) 493–2251. Alternatively, comments may be submitted via the Federal eRulemaking Portal at *http://www.regulations.gov* (follow the on-line instructions for submitting comments). All comments should include the docket number that appears in the heading of this document. All comments received will be available for examination and copying at the above address from 9 a.m. to 5 p.m., e.t., Monday through Friday, except Federal holidays. Those desiring notification of receipt of comments must include a self-addressed, stamped postcard or you may print the acknowledgment page that appears after submitting comments electronically. All comments received into any docket may be searched in electronic format by the name of the individual submitting the comment (or signing the comment, if submitted on behalf of an association, business, labor union, etc.). Persons making comments may review DOT's complete Privacy Act Statement in the **Federal Register** published on April 11, 2000 (Volume 65, Number 70, Pages 19477–78), or you may view the statement at *http://dms.dot.gov.*

FOR FURTHER INFORMATION CONTACT: Mr. Michael P. Onder, Team Leader Truck Size and Weight and Freight Operations and Technology Team, (202) 366–2639, Raymond W. Cuprill, Office of the Chief Counsel, (202) 366–0791, Federal Highway Administration; 1200 New Jersey Avenue, SE., Washington, DC 20590, and Mr. Roberto Fonseca-Martinez, FHWA Division Administrator-Virginia, (804) 775–3333. Office hours for the FHWA are from 7:45 a.m. to 4:15 p.m., e.t., Monday through Friday, except Federal holidays.

SUPPLEMENTARY INFORMATION:

Electronic Access and Filing

You may submit or retrieve comments online through the Federal eRulemaking portal at: *http://www.regulations.gov.* The Web site is available 24 hours each day, 365 days each year. Electronic submission and retrieval help and guidelines are available under the help section of the Web site.

An electronic copy of this document may also be downloaded from Office of the Federal Register's home page at: *http://www.archives.gov/federal_register* and the Government Printing Office's Web page at: *http://www.gpoaccess.gov.*

Background

On January 20, 2009, as a result of the presidential inauguration activities, the number of participants and spectators on their way to the District of Columbia is expected to reach 2–4 million, overwhelming both the roadway and transit networks in the northern Virginia region and creating a safety hazard for commercial traffic to traverse these routes during that time. Additionally, preliminary data indicates that approximately 10,000 or more motor coaches within a 1,000 mile radius of DC are expected to travel to the District and about half of these are expected to come from Virginia. FHWA has already approved of DC's plan to close the I–395 and I–66 bridges into DC on Inauguration Day to all but buses and authorized vehicles.

The VDOT has submitted a request to FHWA for approval of a plan to temporarily close segments of the Interstate to all traffic except buses and authorized vehicles—I–395 (between the Capital Beltway and the District of Columbia (DC) line) and I–66 (between the Capital Beltway and the DC line)—on January 20, 2009, for one consecutive 24-hour period because of the Presidential Inauguration. Temporary closure of these segments to general purpose traffic means that the motor coaches can be moved in and out with maximum safety while providing the possibility of expedited departures in the event of an emergency. Temporary closure of these segments of Interstate to general purpose traffic also facilitates the movement of emergency vehicles into and out of the area, thereby enhancing safety.

The FHWA is responsible for enforcing the Federal regulations applicable to the National Network of highways that can safely and efficiently accommodate the large vehicles authorized by provisions of the Surface Transportation Assistance Act of 1982 (STAA), as amended, designated in accordance with 23 CFR Part 658 and listed in Appendix A. In accordance section 658.11 (Additions, deletions, exceptions, and restrictions), the FHWA may approve deletions or restrictions of the Interstate system or other National Network route based upon specified justification criteria in section 658.11(d)(2). The FHWA is also authorized to delete any route from the National Network on an emergency basis based on safety considerations pursuant to section 658.11(e). These emergency deletions are published in the **Federal Register** for notice and comment.

The FHWA has decided to approve the VDOT request as a deletion from the National Network on an emergency basis for safety considerations in accordance with 23 CFR 658.11(e). As a result, I–395 (between the Capital Beltway and the District of Columbia line) is deleted from the National Network on January 20, 2009, beginning at 12 a.m., for one consecutive 24-hour period. This approval is consistent with the FHWA's decision to grant a similar approval to a request from the DC DOT and published in the **Federal Register** on January 7, 2009 (74 FR 760). The expected large increase in traffic on these routes due to the presidential inauguration activities is expected to create a safety hazard for commercial traffic traversing these routes on that day.

Virginia's request to temporarily close I–66 eastbound and I–395 northbound between the Beltway and the DC line is in accord with the DC plan to manage traffic. As there are insufficient parking and junction points at either I–395 or I–66 at the DC line, restrictions must be in place prior to this junction. By restricting these corridors inside the

Beltway, passengers can transfer from personal vehicles to buses at pre-determined locations along the I–95 corridor and along the I–66 corridor outside the capital beltway and congestion inside the beltway will be minimized. Should a weather event, incident, or the need to evacuate arise, management of the situation will be easier with only buses on these facilities.

The temporary closure should have no impact on Interstate commerce. I–95, which is the main north-south Interstate route in the region, is signed around the Washington Beltway (I–495) so that Interstate traffic need not enter the District at all. Commercial vehicles can also use Route 301 to circumvent Washington when traveling between Virginia and Maryland.

Commercial motor vehicles, of the dimensions and configurations described in 23 CFR 658.13 and 658.15, serving the area can utilize the routes listed above in response to 23 CFR 658.11(d)(2)(ii). Vehicles serving the District of Columbia will be unable to do so because the local and National Highway System (NHS) street network will also be closed during the inauguration. Therefore, the closure of the I–395 and I–66 segments of the Interstate will have no material effect on such traffic. Entities requiring deliveries within and adjacent to the area of closed local and NHS streets will be encouraged to receive deliveries before or after January 20th.

To assist in facilitating interstate commerce the VDOT has already begun an extensive coordination effort with the District of Columbia, the State of Maryland and local jurisdictions such as the counties of Fairfax and Arlington to minimize traffic disruptions. Requests have been made for adjacent jurisdictions to cooperate in routing traffic around the closure and warn interstate traffic of the closure by signs, and other means to get the message out to the trucking industry and the rest of the traveling public.

Authority: 23 U.S.C. 127, 315 and 49 U.S.C. 31111, 31112, and 31114; 23 CFR Part 658.

Issued on: January 12, 2009.

Thomas J. Madison, Jr.,

Federal Highway Administrator.

[FR Doc. E9–900 Filed 1–13–09; 4:15 pm]

BILLING CODE 4910–22–P

DEPARTMENT OF TRANSPORTATION

Federal Motor Carrier Safety Administration

Sunshine Act Meetings; Unified Carrier Registration Plan Board of Directors

AGENCY: Federal Motor Carrier Safety Administration (FMCSA), DOT.

TIME AND DATE: February 12, 2009, 12 noon to 3 p.m., Eastern Standard Time.

PLACE: This meeting will take place telephonically. Any interested person may call Mr. Avelino Gutierrez at (505) 827–4565 to receive the toll free number and pass code needed to participate in this meeting by telephone.

STATUS: Open to the public.

MATTERS TO BE CONSIDERED: The Unified Carrier Registration Plan Board of Directors (the Board) will continue its work in developing and implementing the Unified Carrier Registration Plan and Agreement; and, to that end, it may consider matters properly before the Board.

FOR FURTHER INFORMATION CONTACT: Mr. Avelino Gutierrez, Chair, Unified Carrier Registration Plan Board of Directors at (505) 827–4565.

Dated: January 13, 2009.

Larry W. Minor,

Associate Administrator for Policy and Program Development.

[FR Doc. E9–987 Filed 1–13–09; 4:15 pm]

BILLING CODE 4910–EX–P

DEPARTMENT OF THE TREASURY

Office of the Secretary

Notice of Call for Redemption of 13–1/4 Percent Treasury Bonds of 2009–14

AGENCY: Department of the Treasury.

ACTION: Notice.

SUMMARY: As of January 15, 2009, the Secretary of the Treasury gives public notice that all outstanding 13–1/4 percent Treasury Bonds of 2009–14 (CUSIP No. 912810 DJ 4) dated May 15, 1984, due May 15, 2014, are called for redemption at par on May 15, 2009, on which date interest on such bonds will cease.

DATES: Treasury calls such bonds for redemption on May 15, 2009.

FOR FURTHER INFORMATION CONTACT: Definitives Section, Customer Service Branch 3, Office of Retail Securities, Bureau of the Public Debt, (304) 480–7711.

SUPPLEMENTARY INFORMATION:

1. *Bonds Held in Registered Form.* Owners of such bonds held in registered form should mail bonds for redemption directly to: Bureau of the Public Debt, Definitives Section, Customer Service Branch 3, P.O. Box 426, Parkersburg, WV 26106–0426. Owners of such bonds will find further information regarding how owners must present and surrender such bonds for redemption under this call, in Department of the Treasury Circular No. 300 dated March 4, 1973, as amended (31 CFR part 306); by contacting the Definitives Section, Customer Service Branch 3, Office of Retail Securities, Bureau of the Public Debt, telephone number (304) 480–7711; and by going to the Bureau of the Public Debt's Web site, *http://www.treasurydirect.gov*.

2. *Bonds Held in Book-Entry Form.* Treasury automatically will make redemption payments for such bonds held in book-entry form, whether on the books of the Federal Reserve Banks or in Treasury Direct accounts, on May 15, 2009.

Kenneth E. Carfine,

Fiscal Assistant Secretary.

[FR Doc. E9–788 Filed 1–14–09; 8:45 am]

BILLING CODE 4810–40–P

DEPARTMENT OF THE TREASURY

Internal Revenue Service

Proposed Collection; Comment Request for Form 4810

AGENCY: Internal Revenue Service (IRS), Treasury.

ACTION: Notice and request for comments.

SUMMARY: The Department of the Treasury, as part of its continuing effort to reduce paperwork and respondent burden, invites the general public and other Federal agencies to take this opportunity to comment on proposed and/or continuing information collections, as required by the Paperwork Reduction Act of 1995, Public Law 104–13 (44 U.S.C. 3506(c)(2)(A)). Currently, the IRS is soliciting comments concerning Form 4810, Request for Prompt Assessment Under Internal Revenue Code Section 6501(d).

DATES: Written comments should be received on or before March 16, 2009 to be assured of consideration.

ADDRESSES: Direct all written comments to R. Joseph Durbala, Internal Revenue Service, Room 6129, 1111 Constitution Avenue, NW., Washington, DC 20224.

FOR FURTHER INFORMATION CONTACT: Requests for additional information or copies of the form and instructions

should be directed to Allan Hopkins, at (202) 622–6665, or at Internal Revenue Service, Room 6129, 1111 Constitution Avenue, NW., Washington, DC 20224, or through the Internet, at *Allan.M.Hopkins@irs.gov.*

SUPPLEMENTARY INFORMATION:

Title: Request for Prompt Assessment Under Internal Revenue Code Section 6501(d).

OMB Number: 1545–0430.

Form Number: 4810.

Abstract: Fiduciaries representing a dissolving corporation or a decedent's estate may request a prompt assessment of tax under Internal Revenue Code section 6501(d). Form 4810 is used to help locate the return and expedite the processing of the taxpayer's request.

Current Actions: The form has been redesigned, but there is no change in burden.

Type of Review: Revision of a currently approved collection.

Affected Public: Individuals or households, business or other for-profit organizations, farms, and the Federal government.

Estimated Number of Respondents: 4,000.

Estimated Time per Respondent: 30 minutes.

Estimated Total Annual Burden Hours: 2,000.

The following paragraph applies to all of the collections of information covered by this notice:

An agency may not conduct or sponsor, and a person is not required to respond to, a collection of information unless the collection of information displays a valid OMB control number. Books or records relating to a collection of information must be retained as long as their contents may become material in the administration of any internal revenue law. Generally, tax returns and tax return information are confidential, as required by 26 U.S.C. 6103.

Request for Comments: Comments submitted in response to this notice will be summarized and/or included in the request for OMB approval. All comments will become a matter of public record. Comments are invited on: (a) Whether the collection of information is necessary for the proper performance of the functions of the agency, including whether the information shall have practical utility; (b) the accuracy of the agency's estimate of the burden of the collection of information; (c) ways to enhance the quality, utility, and clarity of the information to be collected; (d) ways to minimize the burden of the collection of information on respondents, including through the use of automated collection techniques or other forms of information technology; and (e) estimates of capital or start-up costs and costs of operation, maintenance, and purchase of services to provide information.

Approved: December 15, 2008.

R. Joseph Durbala,

IRS Reports Clearance Officer.

[FR Doc. E9–754 Filed 1–14–09; 8:45 am]

BILLING CODE 4830–01–P

DEPARTMENT OF THE TREASURY

Internal Revenue Service

[REG–209040–88]

Proposed Collection; Comment Request for Regulation Project

AGENCY: Internal Revenue Service (IRS), Treasury.

ACTION: Notice and request for comments.

SUMMARY: The Department of the Treasury, as part of its continuing effort to reduce paperwork and respondent burden, invites the general public and other Federal agencies to take this opportunity to comment on proposed and/or continuing information collections, as required by the Paperwork Reduction Act of 1995, Public Law 104–13 (44 U.S.C. 3506(c)(2)(A)). Currently, the IRS is soliciting comments concerning an existing notice of proposed rulemaking, REG–209040–88, Qualified Electing Fund Elections (§ 1.1295).

DATES: Written comments should be received on or before March 16, 2009 to be assured of consideration.

ADDRESSES: Direct all written comments to R. Joseph Durbala, Internal Revenue Service, Room 6129, 1111 Constitution Avenue, NW., Washington, DC 20224.

FOR FURTHER INFORMATION CONTACT: Requests for additional information or copies of this regulation should be directed to Allan Hopkins, (202) 622–6665, Internal Revenue Service, Room 6129, 1111 Constitution Avenue, NW., Washington, DC 20224, or through the Internet at *Allan.M.Hopkins@irs.gov*.

SUPPLEMENTARY INFORMATION:

Title: Qualified Electing Fund Elections.

OMB Number: 1545–1514.

Regulation Project Number: REG–209040–88.

Abstract: This regulation permits certain shareholders to make a special election under Internal Revenue Code section 1295 with respect to certain preferred shares of a passive foreign investment company. This special election operates in lieu of the regular section 1295 election and requires less annual reporting. Electing preferred shareholders must account for dividend income under the special rules of the regulation, rather than under the general income inclusion rules of section 1293.

Current Actions: There is no change to this existing regulation.

Type of Review: Extension of a currently approved collection.

Affected Public: Business or other for-profit organizations, not-for-profit organizations, and individuals.

Estimated Number of Respondents: 1,030.

Estimated Time per Respondent: Varies.

Estimated Total Annual Burden Hours: 600.

The following paragraph applies to all of the collections of information covered by this notice:

An agency may not conduct or sponsor, and a person is not required to respond to, a collection of information unless the collection of information displays a valid OMB control number. Books or records relating to a collection of information must be retained as long as their contents may become material in the administration of any internal revenue law. Generally, tax returns and tax return information are confidential, as required by 26 U.S.C. 6103.

Request for Comments: Comments submitted in response to this notice will be summarized and/or included in the request for OMB approval. All comments will become a matter of public record. Comments are invited on: (a) Whether the collection of information is necessary for the proper performance of the functions of the agency, including whether the information shall have practical utility; (b) the accuracy of the agency's estimate of the burden of the collection of information; (c) ways to enhance the quality, utility, and clarity of the information to be collected; (d) ways to minimize the burden of the collection of information on respondents, including through the use of automated collection techniques or other forms of information technology; and (e) estimates of capital or start-up costs and costs of operation, maintenance, and purchase of services to provide information.

Approved: December 16, 2008.

R. Joseph Durbala,

IRS Reports Clearance Officer.

[FR Doc. E9–756 Filed 1–14–09; 8:45 am]

BILLING CODE 4830–01–P

DEPARTMENT OF THE TREASURY

Internal Revenue Service

[FI–81–86]

Proposed Collection; Comment Request for Regulation Project

AGENCY: Internal Revenue Service (IRS), Treasury.

ACTION: Notice and request for comments.

SUMMARY: The Department of the Treasury, as part of its continuing effort to reduce paperwork and respondent burden, invites the general public and other Federal agencies to take this opportunity to comment on proposed and/or continuing information collections, as required by the Paperwork Reduction Act of 1995, Public Law 104–13 (44 U.S.C. 3506(c)(2)(A)). Currently, the IRS is soliciting comments concerning an existing final regulation, FI–81–86 (TD 8513), Bad Debt reserves of Banks (§ 1.585–8).

DATES: Written comments should be received on or before March 16, 2009 to be assured of consideration.

ADDRESSES: Direct all written comments to R. Joseph Durbala, Internal Revenue Service, Room 6129, 1111 Constitution Avenue NW., Washington, DC 20224.

FOR FURTHER INFORMATION CONTACT: Requests for additional information or copies of the regulations should be directed to Allan Hopkins at Internal Revenue Service, Room 6129, 1111 Constitution Avenue, NW., Washington, DC 20224, or at (202) 622–6665, or through the internet at *Allan.M.Hopkins@irs.gov*.

SUPPLEMENTARY INFORMATION:

Title: Bad Debt Reserves of Banks.

OMB Number: 1545–1290.

Regulation Project Number: FI–81–86.

Abstract: Section 585(c) of the Internal Revenue Code requires large banks to change from reserve method of accounting to the specific charge off method of accounting for bad debts. Section 1.585–8 of the regulation contains reporting requirements in cases in which large banks elect (1) to include in income an amount greater than that prescribed by the Code; (2) to use the elective cut-off method of accounting: or (3) to revoke any elections previously made.

Current Actions: There is no change to these existing regulations.

Type of Review: Extension of currently approved collection.

Affected Public: Business or other for-profit organizations.

Estimated Number of Respondents: 2,500.

Estimated Time per Respondent: 15 min.

Estimated Total Annual Burden Hours: 625.

The following paragraph applies to all of the collections of information covered by this notice:

An agency may not conduct or sponsor, and a person is not required to respond to, a collection of information unless the collection of information displays a valid OMB control number. Books or records relating to a collection of information must be retained as long as their contents may become material in the administration of any internal revenue law. Generally, tax returns and tax return information are confidential, as required by 26 U.S.C. 6103.

Request for Comments: Comments submitted in response to this notice will be summarized and/or included in the request for OMB approval. All comments will become a matter of public record. Comments are invited on: (a) Whether the collection of information is necessary for the proper performance of the functions of the agency, including whether the information shall have practical utility; (b) the accuracy of the agency's estimate of the burden of the collection of information; (c) ways to enhance the quality, utility, and clarity of the information to be collected; (d) ways to minimize the burden of the collection of information on respondents, including through the use of automated collection techniques or other forms of information technology; and (e) estimates of capital or start-up costs and costs of operation, maintenance, and purchase of services to provide information.

Approved: December 15, 2008.

R. Joseph Durbala,

IRS Reports Clearance Officer.

[FR Doc. E9–760 Filed 1–14–09; 8:45 am]

BILLING CODE 4830–01–P

DEPARTMENT OF THE TREASURY

Internal Revenue Service

[FI–27–89; FI–61–91]

Proposed Collection; Comment Request For Regulation Project

AGENCY: Internal Revenue Service (IRS), Treasury.

ACTION: Notice and request for comments.

SUMMARY: The Department of the Treasury, as part of its continuing effort to reduce paperwork and respondent burden, invites the general public and other Federal agencies to take this opportunity to comment on proposed and/or continuing information collections, as required by the Paperwork Reduction Act of 1995, Public Law 104–13 (44 U.S.C. 3506(c)(2)(A)). Currently, the IRS is soliciting comments concerning an existing final regulations, FI–27–89 (TD 8366), Real Estate Mortgage Conduits; Reporting Requirements and Other Administrative Matters, and FI–61–91 (TD 8431), Allocation of Allocable Investment Expense; Original Issue Discount Reporting Requirements (§§ 1.67–3, 1.860D–4, 1.860F–4, 1.6049–4 and 1.6049–7).

DATES: Written comments should be received on or before March 16, 2009 to be assured of consideration.

ADDRESSES: Direct all written comments to R. Joseph Durbala, Internal Revenue Service, Room 6129, 1111 Constitution Avenue, NW., Washington, DC 20224.

FOR FURTHER INFORMATION CONTACT: Requests for additional information or copies of this regulation should be directed to Allan Hopkins, at (202) 622–6665, or at Internal Revenue Service, Room 6129, 1111 Constitution Avenue, NW., Washington, DC 20224, or through the Internet, at *Allan.M.Hopkins@irs.gov*.

SUPPLEMENTARY INFORMATION:

Title: FI–27–89, Real Estate Mortgage Investment Conduits; Reporting Requirements and Other Administrative Matters, and FI–61–91, Allocation of Allocable Investment Expense; Original Issue Discount Reporting Requirements.

OMB Number: 1545–1018.

Regulation Project Number: FI–27–89 and FI–61–91.

Abstract: The regulations prescribe the manner in which an entity elects to be taxed as a real estate mortgage investment conduit (REMIC) and the filing requirements for REMICs and certain brokers.

Current Actions: There is no change to these existing regulations.

Type of Review: Extension of a currently approved collection.

Affected Public: Business or other for-profit organizations.

Estimated Number of Respondents: 655.

Estimated Time per Respondent: 1 hour, 30 minutes.

Estimated Total Annual Burden Hours: 978.

The following paragraph applies to all of the collections of information covered by this notice:

An agency may not conduct or sponsor, and a person is not required to respond to, a collection of information unless the collection of information displays a valid OMB control number.

Books or records relating to a collection of information must be retained as long as their contents may become material in the administration of any internal revenue law. Generally, tax returns and tax return information are confidential, as required by 26 U.S.C. 6103.

Request for Comments: Comments submitted in response to this notice will be summarized and/or included in the request for OMB approval. All comments will become a matter of public record. Comments are invited on: (a) Whether the collection of information is necessary for the proper performance of the functions of the agency, including whether the information shall have practical utility; (b) the accuracy of the agency's estimate of the burden of the collection of information; (c) ways to enhance the quality, utility, and clarity of the information to be collected; (d) ways to minimize the burden of the collection of information on respondents, including through the use of automated collection techniques or other forms of information technology; and (e) estimates of capital or start-up costs and costs of operation, maintenance, and purchase of services to provide information.

Approved: December 15, 2008.

R. Joseph Durbala,

IRS Reports Clearance Officer.

[FR Doc. E9–761 Filed 1–14–09; 8:45 am]

BILLING CODE 4830–01–P

DEPARTMENT OF THE TREASURY

Internal Revenue Service

Proposed Collection; Comment Request for Form 13704

AGENCY: Internal Revenue Service (IRS), Treasury.

ACTION: Notice and request for comments.

SUMMARY: The Department of the Treasury, as part of its continuing effort to reduce paperwork and respondent burden, invites the general public and other Federal agencies to take this opportunity to comment on proposed and/or continuing information collections, as required by the Paperwork Reduction Act of 1995, Public Law 104–13 (44 U.S.C. 3506(c)(2)(A)). Currently, the IRS is soliciting comments concerning Form 13704, Health Coverage Tax Credit Registration Update Form.

DATES: Written comments should be received on or before March 16, 2009 to be assured of consideration.

ADDRESSES: Direct all written comments to R. Joseph Durbala, Internal Revenue Service, Room 6129, 1111 Constitution Avenue NW., Washington, DC 20224.

FOR FURTHER INFORMATION CONTACT: Requests for additional information or copies of the form and instructions should be directed to Allan Hopkins, (202) 622–6665, at Internal Revenue Service, Room 6129, 1111 Constitution Avenue NW., Washington, DC 20224, or through the Internet at *Allan.M.Hopkins@irs.gov.*

SUPPLEMENTARY INFORMATION:

Title: Health Coverage Tax Credit Registration Update Form.

OMB Number: 1545–1954.

Form Number: 13704.

Abstract: Internal Revenue Code Sections 35 and 7527 enacted by Public Law 107–210 (see attachment) require the Internal Revenue Service to provide payments of the HCTC to eligible individuals beginning August 1, 2003. The IRS will use the Registration Update Form to ensure, that the processes and communications for delivering these payments help taxpayers determine if they are eligible for the credit and understand what they need to do to continue to receive it.

Current Actions: Although the form has been somewhat redesigned, there is no change in the paperwork burden previously approved by OMB. This form is being submitted for renewal purposes only.

Type of Review: Revision of a currently approved collection.

Affected Public: Individuals and Households, Federal Government, State and Local or Tribal Government.

Estimated Number of Respondents: 2,200.

Estimated Time per Respondent: 30 minutes.

Estimated Total Annual Burden Hours: 1,100.

The following paragraph applies to all of the collections of information covered by this notice:

An agency may not conduct or sponsor, and a person is not required to respond to, a collection of information unless the collection of information displays a valid OMB control number.

Books or records relating to a collection of information must be retained as long as their contents may become material in the administration of any internal revenue law. Generally, tax returns and tax return information are confidential, as required by 26 U.S.C. 6103.

Request for Comments: Comments submitted in response to this notice will be summarized and/or included in the request for OMB approval. All comments will become a matter of public record. Comments are invited on: (a) Whether the collection of information is necessary for the proper performance of the functions of the agency, including whether the information shall have practical utility; (b) the accuracy of the agency's estimate of the burden of the collection of information; (c) ways to enhance the quality, utility, and clarity of the information to be collected; (d) ways to minimize the burden of the collection of information on respondents, including through the use of automated collection techniques or other forms of information technology; and (e) estimates of capital or start-up costs and costs of operation, maintenance, and purchase of services to provide information.

Approved: December 16, 2008.

R. Joseph Durbala,

IRS Reports Clearance Officer.

[FR Doc. E9–763 Filed 1–14–09; 8:45 am]

BILLING CODE 4830–01–P

DEPARTMENT OF THE TREASURY

Internal Revenue Service

Proposed Collection; Comment Request for Form 3949–A

AGENCY: Internal Revenue Service (IRS), Treasury.

ACTION: Notice and request for comments.

SUMMARY: The Department of the Treasury, as part of its continuing effort to reduce paperwork and respondent burden, invites the general public and other Federal agencies to take this opportunity to comment on proposed and/or continuing information collections, as required by the Paperwork Reduction Act of 1995, Public Law 104–13 (44 U.S.C. 3506(c)(2)(A)). Currently, the IRS is soliciting comments concerning Form 3949–A, Information Referral.

DATES: Written comments should be received on or before March 16, 2009 to be assured of consideration.

ADDRESSES: Direct all written comments to R. Joseph Durbala, Internal Revenue Service, Room 6129, 1111 Constitution Avenue NW., Washington, DC 20224.

FOR FURTHER INFORMATION CONTACT: Requests for additional information or copies of the form and instructions should be directed to Allan Hopkins, (202) 622–6665, at Internal Revenue Service, Room 6129, 1111 Constitution Avenue NW., Washington, DC 20224, or through the Internet at *Allan.M.Hopkins@irs.gov*.

SUPPLEMENTARY INFORMATION:

Title: Information Referral.

OMB Number: 1545–1960.

Form Number: 3949–A.

Abstract: Form 3949–A is used by certain taxpayer/investors wishing to report alleged tax violations. The form will be designed capture the essential information needed by IRS for an initial evaluation of the report. Upon return, the Service will conduct the same back-end processing required under present IRM guidelines.

Submission of the information to be included on the form is entirely voluntary on the part of the caller and is not a requirement of the Tax Code.

Current Actions: There is no change in the paperwork burden previously approved by OMB. This form is being submitted for renewal purposes only.

Type of Review: Extension of a currently approved collection.

Affected Public: Individuals and Households.

Estimated Number of Respondents: 215,000.

Estimated Time per Respondent: 15 minutes.

Estimated Total Annual Burden Hours: 53,750.

The following paragraph applies to all of the collections of information covered by this notice:

An agency may not conduct or sponsor, and a person is not required to respond to, a collection of information unless the collection of information displays a valid OMB control number.

Books or records relating to a collection of information must be retained as long as their contents may become material in the administration of any internal revenue law. Generally, tax returns and tax return information are confidential, as required by 26 U.S.C. 6103.

Request for Comments: Comments submitted in response to this notice will be summarized and/or included in the request for OMB approval. All comments will become a matter of public record. Comments are invited on: (a) Whether the collection of information is necessary for the proper performance of the functions of the agency, including whether the information shall have practical utility; (b) the accuracy of the agency's estimate of the burden of the collection of information; (c) ways to enhance the quality, utility, and clarity of the information to be collected; (d) ways to minimize the burden of the collection of information on respondents, including through the use of automated collection techniques or other forms of information technology; and (e) estimates of capital or start-up costs and costs of operation, maintenance, and purchase of services to provide information.

Approved: December 16, 2008.

R. Joseph Durbala,

IRS Reports Clearance Officer.

[FR Doc. E9–764 Filed 1–14–09; 8:45 am]

BILLING CODE 4830–01–P

DEPARTMENT OF THE TREASURY

Internal Revenue Service

Proposed Collection; Comment Request for REG–110311–98 (Final)

AGENCY: Internal Revenue Service (IRS), Treasury.

ACTION: Notice and request for comments.

SUMMARY: The Department of the Treasury, as part of its continuing effort to reduce paperwork and respondent burden, invites the general public and other Federal agencies to take this opportunity to comment on proposed and/or continuing information collections, as required by the Paperwork Reduction Act of 1995, Public Law 104–13 (44 U.S.C. 3506(c)(2)(A)). Currently, the IRS is soliciting comments concerning REG–110311–98 (Final), Corporate Tax Shelter Registration.

DATES: Written comments should be received on or before March 16, 2009 to be assured of consideration.

ADDRESSES: Direct all written comments to R. Joseph Durbala, Internal Revenue Service, Room 6129, 1111 Constitution Avenue, NW., Washington, DC 20224.

FOR FURTHER INFORMATION CONTACT: Requests for additional information or copies of the form and instructions should be directed to Allan Hopkins, (202) 622–6665, at Internal Revenue Service, Room 6129, 1111 Constitution Avenue, NW., Washington, DC 20224, or through the Internet at *Allan.M.Hopkins@irs.gov*.

SUPPLEMENTARY INFORMATION:

Title: Corporate Tax Shelter Registration.

OMB Number: 1545–1687.

Form Number: REG–110311–98 (Final).

Abstract: The regulations finalize the rules relating to the filing of certain taxpayers of a disclosure statement with their Federal tax returns under IRC § 6111(a), the rules relating to the registration of confidential corporate tax shelters under section 6011(d), and the rules relating to the list maintenance requirements under section 6112.

Current Actions: There is no change in the paperwork burden previously approved by OMB. This form is being submitted for renewal purposes only.

Type of Review: Extension of a currently approved collection.

Affected Public: Individuals and Households, Businesses and other for-profit organizations.

Estimated Number of Respondents: 4.

Estimated Time per Respondent: 1 hour.

Estimated Total Annual Burden Hours: 1.

The following paragraph applies to all of the collections of information covered by this notice:

An agency may not conduct or sponsor, and a person is not required to respond to, a collection of information unless the collection of information displays a valid OMB control number.

Books or records relating to a collection of information must be retained as long as their contents may become material in the administration of any internal revenue law. Generally, tax returns and tax return information are confidential, as required by 26 U.S.C. 6103.

Request for Comments: Comments submitted in response to this notice will be summarized and/or included in the request for OMB approval. All comments will become a matter of public record. Comments are invited on: (a) Whether the collection of information is necessary for the proper performance of the functions of the agency, including whether the information shall have practical utility; (b) the accuracy of the agency's estimate of the burden of the collection of information; (c) ways to enhance the quality, utility, and clarity of the information to be collected; (d) ways to minimize the burden of the collection of information on respondents, including through the use of automated collection techniques or other forms of information technology; and (e) estimates of capital or start-up costs and costs of operation, maintenance, and purchase of services to provide information.

Approved: December 16, 2008.

R. Joseph Durbala,

IRS Reports Clearance Officer.

[FR Doc. E9–770 Filed 1–14–09; 8:45 am]

BILLING CODE 4830–01–P

DEPARTMENT OF THE TREASURY

Internal Revenue Service

Open Season for Membership to the Electronic Tax Administration Advisory Committee (ETAAC)

AGENCY: Internal Revenue Service (IRS), Treasury.

ACTION: Notice.

SUMMARY: The Electronic Tax Administration Advisory Committee (ETAAC) was established to provide continued input into the development and implementation of the Internal Revenue Service (IRS) strategy for electronic tax administration. The ETAAC provides an organized public forum for discussion of electronic tax administration issues in support of the overriding goal that paperless filing should be the preferred and most convenient method of filing tax and information returns. ETAAC members convey the public's perception of IRS electronic tax administration activities, offer constructive observations about current or proposed policies, programs, and procedures, and suggest improvements. This document seeks applicants for selection as Committee members.

The Director, Electronic Tax Administration (ETA) and Refundable Credits will assure that the size and organizational representation of the ETAAC obtains balanced membership and includes representatives from various groups including: (1) Tax practitioners and preparers, (2) transmitters of electronic returns, (3) tax software developers, (4) large and small business, (5) employers and payroll service providers, (6) individual taxpayers, (7) financial industry (payers, payment options and best practices), (8) system integrators (technology providers), (9) academic (marketing, sales or technical perspectives), (10) trusts and estates, (11) tax exempt organizations, and (12) state and local governments. We are soliciting applicants from professional and public interest groups. Members serve a three-year term on the ETAAC to allow for a rotation in membership which ensures that different perspectives are represented. All travel expenses within government guidelines will be reimbursed. Potential candidates must pass an IRS tax compliance check and Federal Bureau of Investigation (FBI) background investigation.

DATES: Applications must be received no later than Friday, April 3, 2009.

ADDRESSES: Completed applications should be submitted by using one of the following methods:

- *E-Mail:* Send to *etaac@irs.gov.*
- *Mail:* Send to Internal Revenue Service, ETA & Refundable Credits, SE:W:ETARC:S:RM, 5000 Ellin Road (M/Stop C4–470, Attn: Cassandra Daniels (C4–226), Lanham, Maryland 20706.
- *Fax:* Send via facsimile to (202) 283–2845 (not a toll-free number).

Application packages can be obtained by sending an e-mail to *etaac@irs.gov* or calling (202) 283–2178 (not a toll-free number).

FOR FURTHER INFORMATION CONTACT: Cassandra Daniels, (202) 283–2178 or send an e-mail to *etaac@irs.gov.*

SUPPLEMENTARY INFORMATION: The ETAAC will also provide an annual report to Congress on IRS progress in meeting the Restructuring and Reform Act of 1998 goals for electronic filing of tax returns. This activity is based on the authority to administer the Internal Revenue laws conferred upon the Secretary of the Treasury by section 7801 of the Internal Revenue Code and delegated to the Commissioner of the Internal Revenue under section 7803 of the Internal Revenue Code. The ETAAC will research, analyze, consider, and make recommendations on a wide range of electronic tax administration issues and will provide input into the development of the strategic plan for electronic tax administration.

Applicants should describe and document their qualifications for membership to the Committee. Equal opportunity practices will be followed in all appointments to the Committee. To ensure that the recommendations of the Committee have taken into account the needs of the diverse groups served by the Department, membership will include, to the extent practicable, individuals, with demonstrated ability to represent minorities, women, and persons with disabilities. The Secretary of Treasury will review the recommended candidates and make final selections.

Dated: January 9, 2009.

Angela D. Kraus,

Chief, Relationship Management.

[FR Doc. E9–759 Filed 1–14–09; 8:45 am]

BILLING CODE 4830–01–P

DEPARTMENT OF VETERANS AFFAIRS

Computer Matching Program Between the Department of Veterans Affairs (VA) and the Department of Defense (DoD)

AGENCY: Department of Veterans Affairs.

ACTION: Notice of Computer Matching Program.

SUMMARY: Notice is hereby given that the Department of Veterans Affairs intends to conduct a recurring computer matching program. This will match personnel records of the Department of Defense with VA records of benefit recipients under the Montgomery GI Bill.

The goal of these matches is to identify the eligibility status of veterans, servicemembers, and reservists who have applied for or who are receiving education benefit payments under the Montgomery GI Bill. The purpose of the match is to enable VA to verify that individuals meet the conditions of military service and eligibility criteria for payment of benefits determined by VA under the Montgomery GI Bill—Active Duty (MGIB) and the Montgomery GI Bill—Selected Reserve (MGIB–SR).

DATES: This match will commence on or about February 17, 2009. At the expiration of 18 months after the commencing date the Departments may renew the agreement for another 12 months.

FOR FURTHER INFORMATION CONTACT: Eric Patterson (225B), Strategy and Legislative Development Team Leader, Education Service, Veterans Benefits Administration, Department of Veterans Affairs, 810 Vermont Avenue, NW., Washington, DC 20420, (202) 461–9830.

SUPPLEMENTARY INFORMATION: Further information regarding the matching program is provided below. This information is required by paragraph 6c of the ''Guidelines on the Conduct of Matching Programs'' issued by the Office of Management and Budget (OMB) (54 FR 25818), as amended by OMB Circular A–130, 65 FR 77677 (2000). A copy of the notice has been provided to both Houses of Congress and OMB. The matching program is subject to their review.

a. *Names of participating agencies:* Department of Defense and Department of Veterans Affairs.

b. *Purpose of the match:* The purpose of the match is to enable VA to determine whether an applicant is eligible for payment of benefits under the MGIB or the MGIB-SR and to verify continued compliance with the requirements of both programs.

c. *Authority:* The authority to conduct this match is found in 38 U.S.C. 3684A(a)(1).

d. *Categories of records and individuals covered:* The records covered include eligibility records extracted from DOD personnel files and benefit records that VA establishes for all individuals who have applied for and/or are receiving, or have received education benefit payments under the Montgomery GI Bill. These benefit records are contained in a VA system of records identified as 58VA21/22/28 entitled: Compensation, Pension, Education and Rehabilitation Records—

VA, first published in the **Federal Register** at 41 FR 9294 (March 3, 1976), and last amended at 73 FR 51348 (September 2, 2008), with other amendments as cited therein.

e. *Inclusive dates of the matching program:* The match will begin on February 17, 2009 or 40 days after the OMB review period, whichever is later and continue in effect for 18 months.

f. *Address for receipt of public inquiries or comments:* Interested individuals may submit written comments to the Director, Regulations Management (00REG1), Department of Veterans Affairs, 810 Vermont Avenue, NW., Room 1068, Washington, DC 20420; fax to (202) 273–9026; or through *www.Regulations.gov.* All comments received will be available for public inspection in the Office of Regulation Policy and Management, Room 1063B, between the hours of 8 a.m. and 4:30 p.m., Monday through Friday (except holidays). Please call (202) 461–4902 for an appointment.

Approved: December 31, 2008.

James B. Peake,

Secretary of Veterans Affairs.

[FR Doc. E9–789 Filed 1–14–09; 8:45 am]

BILLING CODE 8320–01–P

Federal Register

Thursday,
January 15, 2009

Part II

Department of Agriculture

Agricultural Marketing Service

7 CFR Parts 60 and 65

Mandatory Country of Origin Labeling of Beef, Pork, Lamb, Chicken, Goat Meat, Wild and Farm-Raised Fish and Shellfish, Perishable Agricultural Commodities, Peanuts, Pecans, Ginseng, and Macadamia Nuts; Final Rule

DEPARTMENT OF AGRICULTURE

Agricultural Marketing Service

7 CFR Parts 60 and 65

[Docket No. AMS–LS–07–0081]

RIN 0581–AC26

Mandatory Country of Origin Labeling of Beef, Pork, Lamb, Chicken, Goat Meat, Wild and Farm-Raised Fish and Shellfish, Perishable Agricultural Commodities, Peanuts, Pecans, Ginseng, and Macadamia Nuts

AGENCY: Agricultural Marketing Service, USDA.

ACTION: Final rule.

SUMMARY: The Farm Security and Rural Investment Act of 2002 (2002 Farm Bill), the 2002 Supplemental Appropriations Act (2002 Appropriations), and the Food, Conservation and Energy Act of 2008 (2008 Farm Bill) amended the Agricultural Marketing Act of 1946 (Act) to require retailers to notify their customers of the country of origin of covered commodities. Covered commodities include muscle cuts of beef (including veal), lamb, chicken, goat, and pork; ground beef, ground lamb, ground chicken, ground goat, and ground pork; wild and farm-raised fish and shellfish; perishable agricultural commodities; macadamia nuts; pecans; ginseng; and peanuts. The implementation of mandatory country of origin labeling (COOL) for all covered commodities, except wild and farm-raised fish and shellfish, was delayed until September 30, 2008.

The 2008 Farm Bill contained a number of provisions that amended the COOL provisions in the Act. These changes included the addition of chicken, goat, macadamia nuts, pecans, and ginseng as covered commodities, the addition of provisions for labeling products of multiple origins, as well as a number of other changes. However, the implementation date of September 30, 2008, was not changed by the 2008 Farm Bill. Therefore, in order to meet the September 30, 2008, implementation date and to provide the newly affected industries the opportunity to provide comments prior to issuing a final rule, on August 1, 2008, the Department published an interim final rule with a request for comments for all of the covered commodities other than wild and farm-raised fish and shellfish. The Agency is issuing this final rule for all covered commodities. This final rule contains definitions, the requirements for consumer notification and product marking, and the recordkeeping responsibilities of both retailers and suppliers for covered commodities.

DATES: This final rule is effective March 16, 2009.

FOR FURTHER INFORMATION CONTACT: Erin Morris, Associate Deputy Administrator, Poultry Programs, AMS, USDA, by telephone on 202–720–5131, or via e-mail at: *erin.morris@usda.gov.*

SUPPLEMENTARY INFORMATION: The information that follows has been divided into three sections. The first section provides background information about this final rule. The second section provides a discussion of the rule's requirements, including a summary of changes from the October 5, 2004, interim final rule for fish and shellfish and the August 1, 2008, interim final rule for the remaining covered commodities as well as a summary of the comments received in response to the relevant prior requests for comments associated with this rulemaking and the Agency's responses to these comments. The prior requests for comments include: The interim final rule for fish and shellfish published in the October 5, 2004, **Federal Register** (69 FR 59708); the reopening of the comment period (for costs and benefits) for the interim final rule that was published in the November 27, 2006, **Federal Register** (71 FR 68431); the reopening of the comment period for all aspects of the interim final rule that was published in the June 20, 2007, **Federal Register** (72 FR 33851); and the interim final rule for the remaining covered commodities that was published in the August 1, 2008, **Federal Register** (73 FR 45106). The last section provides for the required impact analyses including the Regulatory Flexibility Act, the Paperwork Reduction Act, Civil Rights Analysis, and the relevant Executive Orders.

I. Background

Prior Documents in This Proceeding

This final rule is issued pursuant to the 2002 Farm Bill, the 2002 Appropriations, and the 2008 Farm Bill, which amended the Act to require retailers to notify their customers of the origin of covered commodities. In addition, the FY 2004 Consolidated Appropriations Act (Pub. L. 108–199) delayed the implementation of mandatory COOL for all covered commodities except wild and farm-raised fish and shellfish until September 30, 2006. The Agriculture, Rural Development, Food and Drug Administration, and Related Agencies Appropriations Act of 2006 (Pub. L. 109–97) delayed the applicability of mandatory COOL for all covered commodities except wild and farm-raised fish and shellfish until September 30, 2008.

On October 11, 2002, AMS published Guidelines for the Interim Voluntary Country of Origin Labeling of Beef, Lamb, Pork, Fish, Perishable Agricultural Commodities, and Peanuts (67 FR 63367) providing interested parties with 180 days to comment on the utility of the voluntary guidelines.

On November 21, 2002, AMS published a notice requesting emergency approval of a new information collection (67 FR 70205) providing interested parties with a 60-day period to comment on AMS' burden estimates associated with the recordkeeping requirements as required by the Paperwork Reduction Act of 1995 (PRA). On January 22, 2003, AMS published a notice extending this comment period (68 FR 3006) an additional 30 days.

On October 30, 2003, AMS published the proposed rule for the mandatory COOL program (68 FR 61944) with a 60-day comment period. On December 22, 2003, AMS published a notice extending the comment period (68 FR 71039) an additional 60 days. On June 20, 2007, AMS reopened the comment period for the proposed rule for all covered commodities (72 FR 33917).

On October 5, 2004, AMS published the interim final rule for fish and shellfish (69 FR 59708) with a 90-day comment period. On December 28, 2004, AMS published a notice extending the comment period (69 FR 77609) an additional 60 days. On November 27, 2006, the comment period was reopened on the costs and benefits aspects of the interim final rule (71 FR 68431). On June 20, 2007, the comment period was reopened for all aspects of the interim final rule (72 FR 33851).

On August 1, 2008, AMS published an interim final rule for covered commodities other than fish and shellfish (73 FR 45106) with a 60-day comment period.

II. Summary of Changes From the Interim Final Rules

Definitions

In the regulatory text for fish and shellfish (7 CFR part 60), a definition for ''commingled covered commodities'' has been added for clarity and to conform to the regulatory text for the other covered commodities.

In the regulatory text for the remaining covered commodities (7 CFR part 65), the definition of ''ground beef'' has been modified in response to

comments. Under this final rule, the term ''ground beef'' has the meaning given that term in 9 CFR § 319.15(a), i.e., chopped fresh and/or frozen beef with or without seasoning and without the addition of beef fat as such, and containing no more than 30 percent fat, and containing no added water, phosphates, binders, or extenders, and also includes products defined by the term ''hamburger'' in 9 CFR 319.15(b). A full explanation of this change is discussed in the Comments and Responses section.

In 7 CFR part 65, the definition of ''lamb'' has been modified in response to comments to include mutton. Under this final rule, the term ''lamb'' means meat produced from sheep.

In 7 CFR part 65, the definition of ''NAIS-compliant system'' has been deleted in response to comments received as it is no longer needed.

A definition of ''pre-labeled'' has been added to both 7 CFR part 60 and 7 CFR part 65 for clarity in response to comments received. Under this final rule, the term ''pre-labeled'' means a covered commodity that has the commodity's country of origin, and, as applicable, method of production information, and the name and place of business of the manufacturer, packer, or distributor on the covered commodity itself, on the package in which it is sold to the consumer, or on the master shipping container. The place of business information must include at a minimum the city and state or other acceptable locale designation.

In 7 CFR part 65, the definition of ''produced'' has been modified for clarity in response to comments. Under this final rule, the term ''produced'' in the case of perishable agricultural commodities, peanuts, ginseng, pecans, and macadamia nuts means harvested.

Country of Origin Notification

Labeling Covered Commodities of United States Origin

The August 1, 2008, interim final rule contained an express provision allowing U.S. origin covered commodities to be further processed or handled in a foreign country and retain their U.S. origin. The Agency received numerous comments requesting further clarification of this provision as well as comments requesting that it be deleted. Accordingly, under this final rule, this provision has been deleted. To the extent that it is allowed under existing Customs and Border Protection (CBP) and Food Safety and Inspection Service (FSIS) regulations, U.S. origin covered commodities may still be eligible to bear a U.S. origin declaration if they are processed in another country such that a substantial transformation (as determined by CBP) does not occur. In addition, to the extent that additional information about the production steps that occurred in the U.S. is permitted under existing Federal regulations (e.g., CBP, FSIS), nothing in this final rule precludes such information from being included. A full explanation of this change is discussed in the Comments and Responses section.

Country of Origin Notification for Muscle Cuts

Under the August 1, 2008, interim final rule, if an animal was born, raised, and/or slaughtered in the United States and was not imported for immediate slaughter as defined in § 65.180, the origin of the resulting meat products derived from that animal could have been designated as Product of the United States, Country X, and/or (as applicable) Country Y, where Country X and Country Y represent the actual or possible countries of foreign origin.

During the comment period, the Agency received extensive feedback from livestock producers, members of Congress, and other interested parties expressing concern about the provision in the interim final rule that allowed U.S. origin product to be labeled with a mixed origin label. It was never the intent of the Agency for the majority of product eligible to bear a U.S. origin declaration to bear a multiple origin designation. The Agency made additional modifications for clarity.

Under this final rule, for muscle cut covered commodities derived from animals that were born in Country X or (as applicable) Country Y, raised and slaughtered in the United States, and were not derived from animals imported for immediate slaughter as defined in § 65.180, the origin may be designated as Product of the U.S., Country X, and (as applicable) Country Y.

For muscle cut covered commodities derived from animals born, raised, and slaughtered in the U.S. that are commingled during a production day with muscle cut covered commodities derived from animals that were raised and slaughtered in the United States, and were not derived from animals imported for immediate slaughter as defined in § 65.180, the origin may be designated, for example, as Product of the United States, Country X, and (as applicable) Country Y.

For muscle cut covered commodities derived from animals that are born in Country X or Country Y, raised and slaughtered in the United States, that are commingled during a production day with muscle cut covered commodities that are derived from animals that are imported into the United States for immediate slaughter as defined in § 65.180, the origin may be designated as Product of the United States, Country X, and (as applicable) Country Y.

In all of the cases above, the countries of origin may be listed in any order. In addition, if animals are raised in another country and the United States, provided the animals are not imported for immediate slaughter as defined in § 65.180, the raising that occurs in the United States takes precedence over the minimal raising that occurred in the animal's country of birth.

A full explanation of these changes is discussed in the Comments and Responses section.

Markings

Under the October 5, 2004, interim final rule for fish and shellfish and the August 1, 2008, interim final rule for the remaining covered commodities, only those abbreviations approved for use under CBP rules, regulations, and policies were acceptable. The 2008 Farm Bill and the August 1, 2008, interim final rule expressly authorized the use of State, regional, or locality label designations in lieu of country of origin for perishable agricultural commodities, peanuts, pecans, ginseng, and macadamia nuts. In response to comments received, under this final rule, abbreviations may be used for state, regional, or locality label designations for these commodities whether domestically harvested or imported using official United States Postal Service abbreviations or other abbreviations approved by CBP. A full explanation of this change is discussed in the Comments and Responses section.

Recordkeeping

The 2008 Farm Bill made changes to the recordkeeping provisions of the Act. Specifically, the 2008 Farm Bill states that records maintained in the course of the normal conduct of the business of such person, including animal health papers, import or customs documents, or producer affidavits, may serve as such verification. Under the 2008 Farm Bill, the Secretary is prohibited from requiring the maintenance of additional records other than those maintained in the normal conduct of business. In addition to the changes made as a result of the 2008 Farm Bill, other changes were made in the August 1, 2008, interim final rule to reduce the recordkeeping burden. Further changes are being made in this final rule in response to comments received.

For retailers, this rule requires records and other documentary evidence relied upon at the point of sale by the retailer to establish a covered commodity's country(ies) of origin and method of production (wild and/or farm-raised), as applicable, to be either maintained at the retail facility or at another location for as long as the product is on hand and provided to any duly authorized representative of USDA, upon request, within 5 business days of the request. For pre-labeled products, the label itself is sufficient information on which the retailer may rely to establish the product's origin and method of production, as applicable, and no additional records documenting origin and method of production information are necessary. Under the August 1, 2008, interim final rule, retailers were required to maintain these records for a period of 1 year.

Under this final rule, upon request by USDA representatives, suppliers and retailers shall make available to USDA representatives, records maintained in the normal course of business that verify an origin and method of production (wild and/or farm-raised) claim, as applicable. Such records shall be provided within 5 business days of the request and may be kept in any location.

Under this final rule, producer affidavits shall also be considered acceptable records that suppliers may utilize to initiate origin claims for all covered commodities, provided it is made by someone having first-hand knowledge of the origin of the covered commodity and identifies the covered commodity unique to the transaction.

Responsibilities of Retailers and Suppliers

With regard to the ''safe harbor'' language that was contained in the October 30, 2003, proposed rule and the October 5, 2004, interim final rule, which allowed retailers and suppliers to rely on the information provided unless they could have been reasonably expected to have knowledge otherwise, based on comments received, similar ''safe harbor'' language has been included in this final rule. A complete discussion is contained in the Comments and Responses section of this final rule.

With regard to the recordkeeping provision concerning livestock that are part of a NAIS-compliant system, in response to comments received, the Agency has clarified that packers who slaughter animals that are tagged with an 840 Animal Identification Number device without the presence of any additional accompanying marking indicating the origin as being a country other than the U.S. (i.e., ''CAN'' or ''M'') may use that information as a basis for a U.S. origin claim. In addition, packers that slaughter animals that are part of another country's recognized official system (e.g. Canadian official system, Mexico official system) may also rely on the presence of an official ear tag or other approved device on which to base their origin claims.

Highlights of This Final Rule

Covered Commodities

As defined in the statute, the term ''covered commodity'' includes: Muscle cuts of beef, lamb, pork, chicken, and goat; ground beef, ground lamb, ground pork, ground chicken, and ground goat; wild and farm-raised fish and shellfish; perishable agricultural commodities (fresh and frozen fruits and vegetables); peanuts; pecans; ginseng; and macadamia nuts.

Exemption for Food Service Establishments

Under the statute and therefore this final rule, food service establishments are exempt from COOL labeling requirements. Food service establishments are restaurants, cafeterias, lunch rooms, food stands, saloons, taverns, bars, lounges, or other similar facilities operated as an enterprise engaged in the business of selling food to the public. Similar food service facilities include salad bars, delicatessens, meal preparation stations in which the retailer sets out ingredients for different meals and consumers assemble the ingredients into meals to take home, and other food enterprises located within retail establishments that provide ready-to-eat foods that are consumed either on or outside of the retailer's premises.

Exclusion for Ingredient in a Processed Food Item

Items are excluded from labeling under this regulation when a covered commodity is an ingredient in a processed food item. Under this final rule, a ''processed food item'' is defined as: A retail item derived from a covered commodity that has undergone specific processing resulting in a change in the character of the covered commodity, or that has been combined with at least one other covered commodity or other substantive food component (e.g., chocolate, breading, tomato sauce), except that the addition of a component (such as water, salt, or sugar) that enhances or represents a further step in the preparation of the product for consumption, would not in itself result in a processed food item. Specific processing that results in a change in the character of the covered commodity includes cooking (e.g., frying, broiling, grilling, boiling, steaming, baking, roasting), curing (e.g., salt curing, sugar curing, drying), smoking (cold or hot), and restructuring (e.g., emulsifying and extruding).

With regard to determining what is considered an ''other covered commodity'' with respect to fruits and vegetables, the Agency will generally rely on U.S. Grade Standards for fruits and vegetables to make the distinction of whether or not the retail item is a combination of ''other covered commodities''. For example, different colored sweet peppers combined in a package will require country of origin notification because there is one U.S. Grade Standard for sweet peppers, regardless of the color. As another example, there are separate U.S. Grade Standards for iceberg lettuce and romaine lettuce. Therefore, this type of salad mix will not be required to be labeled with country of origin information. While the Agency previously used this example in the preamble of the August 1, 2008, interim final rule and concluded that such a salad mix would be subject to COOL, the Agency now believes the use of U.S. Grade Standards in determining when a perishable retail item is considered a processed food item provides a bright line to the industry and is an easy and straightforward approach as regulated entities are already familiar with U.S. Grade Standards.

There are limited exceptions to this policy. One exception occurs when there are different grade standards for the same commodity based on the region of production. For example, although there are separate grade standards for oranges from Florida, Texas, and California/Arizona, combining oranges from these different regions would not be considered combining ''other covered commodities'' and therefore, a container with oranges from Texas and Florida is required to be labeled with country of origin information.

As examples of processing steps that are considered to further prepare product for consumption, meat products that have been needle-tenderized or chemically tenderized using papain or other similar additive are not considered processed food items. Likewise, meat products that have been injected with sodium phosphate or other similar solution are also not considered processed food items as the solution has not changed the character of the covered commodity. In contrast, meat products that have been marinated with a particular flavor such as lemon-

pepper, Cajun, etc. have been changed in character and thus are considered processed food items.

While the definition of a processed food item does exclude a number of products from labeling under the COOL program, many imported items are still required to be marked with country of origin information under the Tariff Act of 1930 (19 U.S.C. 1304) (Tariff Act). For example, while a bag of frozen peas and carrots is considered a processed food item under this final rule, if the peas and carrots are of foreign origin, the Tariff Act requires that the country of origin information be marked on the bag. Likewise, while roasted peanuts, pecans, and macadamia nuts are also considered processed food items under this final rule, under the Tariff Act, if the nuts are of foreign origin, the country of origin information must be indicated to the ultimate purchaser. This also holds true for a variety of fish and shellfish items. For example, salmon imported from Chile that is smoked in the United States as well as shrimp imported from Thailand that is cooked in the United States are also required to be labeled with country of origin information under the Tariff Act. In addition, items such as marinated lamb loins that are imported in consumer-ready packages would also be required to be labeled with country of origin information as both CBP and FSIS regulations require meat that is imported in consumer-ready packages to be labeled with origin information on the package.

Examples of items excluded from country of origin labeling include teriyaki flavored pork loin, meatloaf, roasted peanuts, breaded chicken tenders, breaded fish sticks, flank steak with portabella stuffing, steakhouse sirloin kabobs with vegetables, cooked and smoked meats, blue cheese angus burgers, cured hams, bacon, corned beef briskets, prosciutto rolled in mozzarella cheese, a salad that contains iceberg and romaine lettuce, a fruit cup that contains cantaloupe, watermelon, and honeydew, mixed vegetables, and a salad mix that contains lettuce and carrots and/or salad dressing.

Labeling Covered Commodities of United States Origin

The law prescribes specific criteria that must be met for a covered commodity to bear a ''United States country of origin'' declaration. Therefore, covered commodities may be labeled as having a United States origin if the following specific requirements are met:

(a) Beef, pork, lamb, chicken, and goat—covered commodities must be derived from animals exclusively born, raised, and slaughtered in the United States; from animals born and raised in Alaska or Hawaii and transported for a period of time not more than 60 days through Canada to the United States and slaughtered in the United States; or from animals present in the United States on or before July 15, 2008, and once present in the United States, remained continuously in the United States.

(b) Perishable agricultural commodities, peanuts, pecans, ginseng, and macadamia nuts—covered commodities must be from products exclusively produced in the United States.

(c) Farm-raised fish and shellfish—covered commodities must be derived exclusively from fish or shellfish hatched, raised, harvested, and processed in the United States, and that has not undergone a substantial transformation (as established by CBP) outside of the United States.

(d) Wild fish and shellfish—covered commodities must be derived exclusively from fish or shellfish either harvested in the waters of the United States or by a U.S. flagged vessel and processed in the United States or aboard a U.S. flagged vessel, and that has not undergone a substantial transformation (as established by CBP) outside of the United States.

Labeling Country of Origin for Imported Products

Under this final rule, a fish or shellfish imported covered commodity shall retain its origin as declared to CBP at the time the product enters the United States, through retail sale, provided it has not undergone a substantial transformation (as established by CBP) in the United States. Similarly, for the other covered commodities, an imported covered commodity for which origin has already been established as defined by the Act (e.g., born, raised, slaughtered or harvested) and for which no production steps have occurred in the United States shall retain its origin as declared to CBP at the time the product enters the United States, through retail sale.

Covered commodities imported in consumer-ready packages are currently required to bear a country of origin declaration on each individual package under the Tariff Act. This final rule does not change these requirements.

Labeling Fish and Shellfish Imported Products That Have Been Substantially Transformed in the United States

Under this final rule, in the case of wild fish and shellfish, if a covered commodity was imported from country X and substantially transformed (as established by CBP) in the United States or aboard a U.S. flagged vessel, the product shall be labeled at retail as ''From [country X], processed in the United States.'' Alternatively, the product may be labeled as ''Product of country X and the United States''. The covered commodity must also be labeled to indicate that it was derived from wild fish or shellfish.

In the case of farm-raised fish, if a covered commodity was imported from country X at any stage of production and substantially transformed (as established by CBP) in the United States, the product shall be labeled at retail as ''From [country X], processed in the United States.'' Alternatively, the product may be labeled as ''Product of country X and the United States''. The covered commodity shall also be labeled to indicate that it was derived from farm-raised fish or shellfish.

Labeling Muscle Cut Covered Commodities of Multiple Countries of Origin (That Includes the United States)

Under this final rule, for muscle cut covered commodities derived from animals that were born in Country X or (as applicable) Country Y, raised and slaughtered in the United States, and were not derived from animals imported for immediate slaughter as defined in § 65.180, the origin may be designated, for example, as Product of the U.S., County X, and (as applicable) Country Y. The countries of origin may be listed in any order.

For muscle cut covered commodities derived from animals born, raised, and slaughtered in the U.S. that are commingled during a production day with muscle cut covered commodities derived from animals that were raised and slaughtered in the United States, and were not derived from animals imported for immediate slaughter as defined in § 65.180, the origin may be designated as, for example, Product of the United States, Country X, and (as applicable) Country Y. The countries of origin may be listed in any order.

If an animal was imported into the United States for immediate slaughter as defined in § 65.180, the origin of the resulting meat products derived from that animal shall be designated as Product of Country X and the United States.

For muscle cut covered commodities derived from animals that are born in Country X or Country Y, raised and slaughtered in the United States, that are commingled during a production day with muscle cut covered commodities that are derived from animals that are imported into the

United States for immediate slaughter as defined in § 65.180, the origin may be designated as Product of the United States, Country X, and (as applicable) Country Y. The countries of origin may be listed in any order.

In all cases above, the origin declaration may include more specific information related to production steps provided records to substantiate the claims are maintained and the claim is consistent with other applicable Federal legal requirements. In addition, if animals are raised in another country and the United States, provided the animals are not imported for immediate slaughter as defined in § 65.180, the raising that occurs in the United States takes precedence over the minimal raising that occurred in the animal's country of birth.

With regard to the commingling of meat of different origin categories, the Agency has received comments requesting that the Agency provide additional clarification on how commingled meat products can be labeled. Under this final rule, it is permissible to commingle meat derived from animals imported for immediate slaughter with meat derived from mixed origin animals and label it as Product of U.S., Canada. It is also permissible to commingle meat derived from animals imported for immediate slaughter with meat of mixed origin and label it as category C (product imported for immediate slaughter, i.e., Product of Canada, U.S.). Further, the declaration for meat derived from mixed origin animals may list the countries of origin in any order (e.g., Product of U.S., Canada or Product of Canada, U.S.).

Labeling Commingled Covered Commodities

In this final rule, a commingled covered commodity is defined as a single type of covered commodity (e.g., frozen peas, shrimp), presented for retail sale in a consumer package, that has been prepared from raw material sources having different origins. Further, a commingled covered commodity does not include meat products. If the retail product contains two different types of covered commodities (e.g., peas and carrots), it is considered a processed food item and is not subject to mandatory COOL.

In the case of perishable agricultural commodities, wild and farm-raised fish and shellfish, peanuts, pecans, ginseng, and macadamia nuts, for imported covered commodities that have not subsequently been substantially transformed in the United States that are commingled with commodities having different origins, the declaration shall indicate the countries of origin for all covered commodities in accordance with CBP marking regulations (19 CFR part 134). For example, a bag of frozen peas that were sourced from France and India is currently required under CBP regulations to be marked with that origin information on the package.

In the case of wild and farm-raised fish and shellfish covered commodities, when the retail product contains imported covered commodities that have subsequently undergone substantial transformation in the United States are commingled with other imported covered commodities that have subsequently undergone substantial transformation in the United States (either prior to or following substantial transformation in the United States) and/or U.S. origin covered commodities, the declaration shall indicate the countries of origin contained therein or that may be contained therein.

Defining Country of Origin for Ground Meat Products

The law states that the origin declaration for ground beef, ground pork, ground lamb, ground goat, and ground chicken covered commodities shall list the countries of origin contained therein or shall list the reasonably possible countries of origin. Therefore, under this final rule, when a raw material from a specific origin is not in a processor's inventory for more than 60 days, the country shall no longer be included as a possible country of origin. This does not mean that labels must change every 60 days. Labels containing the applicable countries (e.g., Country x, y, z) may extend beyond a given 60-day period depending on how long raw materials from those countries are actually in inventory. If a country of origin is utilized as a raw material source in the production of ground beef, it must be listed on the label. The 60-day in inventory allowance speaks only to when countries may no longer be listed. The 60-day inventory allowance is an allowance for the Agency' enforcement purposes for when the Agency would deem ground meat products as no longer accurately labeled. In the event of a supplier audit by USDA, records kept in the normal course of business should provide the information necessary to verify the origin claim.

Remotely Purchased Products

For sales of a covered commodity in which the customer purchases a covered commodity prior to having an opportunity to observe the final package (e.g., Internet sales, home delivery sales, etc.) the retailer may provide the country of origin and method of production information (wild and/or farm-raised), as applicable, either on the sales vehicle or at the time the product is delivered to the consumer.

Markings

Under this final rule, the country of origin declaration and method of production (wild and/or farm-raised) designation, as applicable, may be provided to consumers by means of a label, placard, sign, stamp, band, twist tie, pin tag, or other clear and visible sign on the covered commodity or on the package, display, holding unit, or bin containing the commodity at the final point of sale to consumers. The country of origin declaration and method of production (wild and/or farm-raised) designation may be combined or made separately.

With respect to the production designation, various forms of the production designation are acceptable, including ''wild caught,'' ''wild,'' ''farm-raised,'' ''farmed,'' or a combination of these terms for products that contain both wild and farm-raised fish or shellfish provided it can be readily understood by the consumer and is in conformance with other Federal labeling laws. Designations such as ''ocean caught,'' ''caught at sea'', ''line caught,'' ''cultivated,'' or ''cultured'' do not meet the requirements of this regulation. Alternatively, the method of production (wild and/or farm-raised) designation may also be in the form of a check box.

In general, country abbreviations are not acceptable. Only those abbreviations approved for use under CBP rules, regulations, and policies, such as ''U.K.'' for ''The United Kingdom of Great Britain and Northern Ireland'', ''Luxemb'' for Luxembourg, and ''U.S.'' or ''USA'' for the ''United States of America'' are acceptable. The Agency is aware of a few additional abbreviations allowed by CBP such as ''Holland'' for The Netherlands and has posted this information on the COOL Web site.

The declaration of the country of origin of a product may be in the form of a statement such as ''Product of USA,'' ''Produce of the USA'', or ''Harvested in Mexico''; may only contain the name of the country such as ''USA'' or ''Mexico''; or may be in the form of a check box provided it is in conformance with CBP marking regulations and other Federal labeling laws (i.e., FDA, FSIS). For example, CBP marking regulations (19 CFR part 134) specifically require the use of the words ''product of'' in certain circumstances. The adjectival form of the name of a country may be used as proper

notification of the country of origin of imported commodities provided the adjectival form of the name does not appear with other words so as to refer to a kind or species of product. Symbols or flags alone may not be used to denote country of origin. The labeling requirements under this rule do not supersede any existing Federal legal requirements, unless otherwise specified, and any country of origin or method of production (wild and/or farm-raised) designation, as applicable, must not obscure or intervene with other labeling information required by existing regulatory requirements.

For domestic and imported perishable agricultural commodities, macadamia nuts, peanuts, pecans, and ginseng, State, regional, or locality label designations are acceptable in lieu of country of origin labeling. Such designations must be nationally distinct. For example, Rio Grande Valley would not be an acceptable designation because consumer would not know whether the country of origin was the U.S. or Mexico. Abbreviations may be used for state, regional, or locality label designations for these commodities whether domestically harvested or imported using official United States Postal Service abbreviations or other abbreviations approved by CBP.

With regard to the use of established State marketing programs such as ''California Grown'', ''Go TEXAN'', ''Jersey Fresh'', etc., these programs may be used for COOL notification purposes provided they meet the requirements to bear a U.S. origin declaration as specified in this final rule.

In order to provide the industry with as much flexibility as possible, this rule does not contain specific requirements as to the exact placement or size of the country of origin or method of production (wild and/or farm-raised) declaration. However, such declarations must be legible and conspicuous, and allow consumers to find the country(ies) of origin and method of production, as applicable, easily and read them without strain when making their purchases, and provided that existing Federal labeling requirements must be followed. For example, the country of origin declaration may be located on the information panel of a package of frozen produce as consumers are familiar with such location for displaying nutritional and other required information. Likewise, in the case of store overwrap and other similar type products, which is the type of packaging used for fresh meat and poultry products, the information panel would also be an acceptable location for the origin declaration and method of production (wild and/or farm-raised) designation, as applicable, as this is a location that is currently utilized for providing other Federally-mandated labeling information (i.e., safe handling instructions, nutrition facts, and ingredients statement). However, to the extent practicable, the Agency encourages retailers and suppliers to place this information on the front of these types of packages, also known as the principal display panel, so it will be readily apparent to consumers.

With respect to the use of signage for bulk displays for meat covered commodities, the Agency has observed that a vast majority of retailers are utilizing one sign for either the entire meat case or for an entire commodity type (i.e., chicken) to provide the country of origin notification. While the statute and this regulation provide flexibility in how country of origin information can be provided, the Agency believes that the use of such signage could potentially be false or misleading to consumers. For example, frequently display cases also contain noncovered meat commodities for which no origin information has been provided to the retailer. Thus a sign that states, ''all of our beef products are of U.S. origin'' may not be completely accurate and may be in violation of other Federal laws, regulations, and policies that have truth in labeling provisions such as the Federal Meat Inspection Act, the Federal Trade Commission's ''Made in the USA'' policies, and the Federal Food, Drug, and Cosmetic Act. The Agency encourages retailers to review signage that they have used in the implementation of the fish and shellfish program for alternative acceptable methods of providing COOL information.

With regard to the provision in both the interim final rule for fish and shellfish and the interim final rule for the remaining covered commodities concerning bulk containers that allows the bulk container to contain a covered commodity from more than one country of origin, under this final rule, it remains permissible provided all possible origins are listed. For example, if a retailer puts apples from the U.S. and New Zealand in a bulk bin, the sign for the bin should list both the U.S. and New Zealand. If the retailer has apples in the store from New Zealand, but has not added these apples to the bulk bin, it would not be permissible to have New Zealand on the sign. Likewise in the case of fish, if a retailer has salmon from both the U.S. and Chile in the back of the store, but has only put out for display salmon from Chile, the country of origin designation should only list Chile. It would not be permissible to list both the U.S. and Chile at that time because it is not possible that the display contains salmon of U.S. origin.

Recordkeeping Requirements and Responsibilities

The law states that the Secretary may conduct an audit of any person that prepares, stores, handles, or distributes a covered commodity for retail sale to verify compliance. As such, records maintained in the normal course of business that verify origin and method of production (wild and/or farm-raised) declarations, as applicable, are necessary in order to provide retailers with credible information on which to base origin and method of production declarations.

Under this final rule, any person engaged in the business of supplying a covered commodity to a retailer, whether directly or indirectly (i.e., growers, distributors, handlers, packers, and processors, etc.), must make available information to the subsequent purchaser about the country(ies) of origin and method of production, as applicable, of the covered commodity. This information may be provided either on the product itself, on the master shipping container, or in a document that accompanies the product through retail sale provided it identifies the product and its country(ies) of origin and method of production, as applicable.

Any person engaged in the business of supplying a covered commodity to a retailer, whether directly or indirectly, must maintain records to establish and identify the immediate previous source (if applicable) and immediate subsequent recipient of a covered commodity for a period of 1 year from the date of the transaction.

In addition, the supplier of a covered commodity that is responsible for initiating a country of origin and, as applicable, method of production declaration, must possess records that are necessary to substantiate that claim for a period of 1 year from the date of the transaction. In an effort to reduce the recordkeeping burden associated with COOL, for that purpose, packers that slaughter animals that are tagged with an 840 Animal Identification Number device without the presence of any additional accompanying marking indicating the origin as being a country other than the U.S. (i.e., ''CAN'' or ''M'') may use that information as a basis for a U.S. origin claim. In addition, packers that slaughter animals that are part of another country's recognized official system (e.g., Canadian official system,

Mexico official system) may also rely on the presence of an official ear tag or other approved device on which to base their origin claims. Producer affidavits shall also be considered acceptable records that suppliers may utilize to initiate origin claims, provided it is made by someone having first-hand knowledge of the origin of the covered commodity and identifies the covered commodity unique to the transaction.

Under this final rule, any intermediary supplier handling a covered commodity that is found to be designated incorrectly as to the country of origin and/or method of production, as applicable, shall not be held liable for a violation of the Act by reason of the conduct of another if the intermediary supplier relied on the designation provided by the initiating supplier or other intermediary supplier, unless the intermediary supplier willfully disregarded information establishing that the country of origin and/or method of production, as applicable, was false.

For an imported covered commodity, the importer of record as determined by CBP, must ensure that records: Provide clear product tracking from the United States port of entry to the immediate subsequent recipient and accurately reflect the country(ies) of origin of the item as identified in relevant CBP entry documents and information systems; and maintain such records for a period of 1 year from the date of the transaction.

Under this final rule, retailers also have responsibilities. In providing the country of origin notification for a covered commodity, retailers are to convey the origin and, as applicable, method of production information provided by their suppliers. Only if the retailer physically commingles a covered commodity of different origins and/or methods of production, as applicable, in preparation for retail sale, whether in a consumer-ready package or in a bulk display (and not discretely packaged) (i.e., full service meat case), can the retailer initiate a multiple country of origin designation that reflects the actual countries of origin and methods of production, as applicable, for the resulting covered commodity.

Records and other documentary evidence relied upon at the point of sale by the retailer to establish a covered commodity's country(ies) of origin and method of production, as applicable, must either be maintained at the retail facility or at another location for as long as the product is on hand and provided to any duly authorized representatives of USDA within 5 business days of the request. For pre-labeled products, the label itself is sufficient information on which the retailer may rely to establish the product's origin and method of production, as applicable, and no additional records documenting origin and method of production information are necessary. A pre-labeled covered commodity is a covered commodity that has the commodity's country of origin and method of production, as applicable, and the name and place of business of the manufacturer, packer, or distributor on the covered commodity itself, on the package in which it is sold to the consumer, or on the master shipping container. The place of business information must include at a minimum the city and state or other acceptable locale designation.

Additionally, records that identify the covered commodity, the retail supplier, and for products that are not pre-labeled, the country of origin and method of production information, as applicable, must be maintained for a period of 1 year from the date the origin declaration is made at retail.

Under this final rule, any retailer handling a covered commodity that is found to be designated incorrectly as to the country of origin and/or method of production, as applicable, shall not be held liable for a violation of the Act by reason of the conduct of another if the retailer relied on the designation provided by the supplier, unless the retailer willfully disregarded information establishing that the declaration of country of origin and/or method of production, as applicable, was false.

Enforcement

The law encourages the Secretary to enter into partnerships with States to the extent practicable to assist in the administration of this program. As such, USDA has entered into partnerships with States that have enforcement infrastructure to conduct retail compliance reviews.

Routine compliance reviews may be conducted at retail establishments and associated administrative offices, and at supplier establishments subject to these regulations. USDA will coordinate the scheduling and determine the procedures for compliance reviews. Only USDA will be able to initiate enforcement actions against a person found to be in violation of the law. USDA may also conduct investigations of complaints made by any person alleging violations of these regulations when the Secretary determines that reasonable grounds for such investigation exist.

Retailers and suppliers, upon being notified of the commencement of a compliance review, must make all records or other documentary evidence material to this review available to USDA representatives within 5 business days of receiving a request and provide any necessary facilities for such inspections.

The law contains enforcement provisions for both retailers and suppliers that include civil penalties of up to $1,000 for each violation. For retailers and persons engaged in the business of supplying a covered commodity to a retailer (suppliers), the law states that if the Secretary determines that a retailer or supplier is in violation of the Act, the Secretary must notify the retailer or supplier of the determination and provide the retailer or supplier with a 30-day period during which the retailer or supplier may take necessary steps to comply. If upon completion of the 30-day period the Secretary determines the retailer or supplier has (1) not made a good faith effort to comply and (2) continues to willfully violate the Act, after providing notice and an opportunity for a hearing, the retailer or supplier may be fined not more than $1,000 for each violation.

In addition to the enforcement provisions contained in the Act, statements regarding a product's origin and method of production, as applicable, must also comply with other existing Federal statutes. For example, the Federal Food, Drug, and Cosmetic Act prohibits labeling that is false or misleading. In addition, for perishable agricultural commodities, mislabeling country of origin is also in violation of PACA misbranding provisions. Thus, inaccurate country of origin labeling of covered commodities may lead to additional penalties under these statutes as well.

With regard to the voluntary use of 840 tags on which to base origin claims, 9 CFR 71.22 prohibits the removal of official identification devices except at the time of slaughter. The importation of animals and animal health are regulated by the Animal and Plant Health Inspection Service (APHIS). This regulation does not alter any APHIS requirements.

Comments and Responses

On October 30, 2003, AMS published the proposed rule for the mandatory COOL program (68 FR 61944) with a 60-day comment period. On December 22, 2003, AMS published a notice extending the comment period (68 FR 71039) an additional 60 days. AMS received over 5,600 timely comments from consumers, retailers, foreign governments, producers, wholesalers, manufacturers, distributors, members of

Congress, trade associations and other interested parties. The majority of the comments received were from consumers expressing support for the requirement to label the method of production of fish and shellfish as either wild and/or farm-raised. Numerous other comments related to the definition of a processed food item, the recordkeeping requirements for both retailers and suppliers, and the enforcement of the program. In addition, over 100 late comments were received that generally reflected the substance of the timely comments received.

On June 20, 2007, AMS reopened the comment period for the proposed rule for all covered commodities (72 FR 33917). AMS received over 721 comments from consumers, retailers, foreign governments, producers, wholesalers, manufacturers, distributors, members of Congress, trade associations and other interested parties.

On October 5, 2004, AMS published the interim final rule for fish and shellfish (69 FR 59708) with a 90-day comment period. On December 28, 2004, AMS published a notice extending the comment period (69 FR 77609) an additional 60 days. AMS received approximately 800 comments on the interim final rule, the majority of which were form letters from consumers expressing their support for country of origin labeling and requesting that the definition of a processed food item be narrowed to require labeling of canned, breaded, and cooked products.

On November 27, 2006, the comment period was reopened on the cost and benefit aspects of the interim final rule (71 FR 68431). AMS received over 192 comments from consumers, retailers, foreign governments, producers, wholesalers, manufacturers, distributors, members of Congress, trade associations and other interested parties. The majority of the comments received were from consumers expressing support for the requirement to label fish and shellfish with the country of origin and method of production as either wild and/or farm-raised, and to extend mandatory COOL to the remaining covered commodities. Most of the comments did not address the specific question of the rule's costs and benefits. A limited number of the comments did relate to the costs and benefits of the documentation and recordkeeping requirements of the law. Some commenters noted no increased sales or demand for seafood as a result of COOL. Several commenters provided evidence regarding the costs of compliance with the interim final rule covering fish and shellfish. Other commenters cited academic and Government Accountability Office studies to argue that USDA overestimated the costs to implement systems to meet COOL requirements, and that the true costs to industry will be much lower than those projected by the economic impact analysis contained in the interim final rule for fish and shellfish. On August 1, 2008, AMS published an interim final rule with a 60-day comment period for the covered commodities other than fish and shellfish. The Agency received 275 comments representing the opinions of 11,798 consumers, retailers, foreign governments, producers, wholesalers, manufacturers, distributors, members of Congress, trade associations and other interested parties. The majority of comments received were on the definition of a processed food item, labeling muscle cuts of multiple countries of origin, and the recordkeeping provisions for both retailers and suppliers.

When the proposed rule was published on October 30, 2003, the regulatory provisions were all proposed to be contained in a new part 60 of Title 7 of the Code of Federal Regulations. Under the August 1, 2008, interim final rule, the regulatory provisions for the covered commodities other than fish and shellfish appeared at 7 CFR part 65. For the ease of the reader, the discussion of the comments has been broken down by issue. To the extent that a comment or issue pertains only to fish and shellfish covered commodities, it is noted in the explanation.

Definitions

Covered Commodity

Summary of Comments: Several commenters requested that the Agency add products to the list of commodities covered by COOL. One commenter suggested that almonds should be included in mandatory COOL and another commenter requested that fresh chestnuts be added. A final commenter suggested that meat commodities derived from beefalo be included as covered commodities. Another commenter asked that the Agency better clarify what is a ''muscle cut.''

Agency Response: The statute specifically defines the commodities covered by the mandatory COOL program. As such, the Agency does not have the authority to include additional classes of covered commodities. Accordingly, recommendations regarding covering additional classes of commodities cannot be adopted. With regard to clarifying what the Agency defined to be a muscle cut of beef, pork, lamb, chicken, or goat, the Agency has provided information on its Web site and in written form pertaining to specific items and will continue to do so as questions arise. In general, the Agency views those cuts of meat (with or without bone) derived from a carcass (e.g., beef steaks, pork chops, chicken breasts, etc.) to be covered items. However, cuts of meat that are removed during the conversion of an animal to a carcass (e.g., variety meats such as pork hearts, beef tongues, etc.) are not viewed to be muscle cuts nor are items sold as bones practically free of meat (e.g., lamb neck bones, beef femur bones, etc.) or fat practically free of meat (e.g., pork clear plate, chicken skin, etc.) removed from a carcass.

Ground Beef

Summary of Comments: One commenter noted that fabricated steak is not specifically listed as a covered commodity in the law and expressed their belief that AMS could proactively cover a closely related commodity rather than limit COOL to only statutorily listed commodities. The commenter urged the Agency to broaden rather than narrow its scope of covered commodities to include fabricated steak in the definition of ground beef.

Another commenter noted the rule exempts ground beef, hamburger and beef patties that have been seasoned (unless that seasoning is salt or sugar), but does not exempt ground beef, hamburger and beef patties that have not been seasoned. The commenter requested that the definition for ground beef be reconsidered and clarified so that ground beef, hamburger and beef patties where salt or sugar is added are recognized as a processed food item and therefore exempt under this rule.

Several commenters did not agree that the Agency's expansion of the definition of ground beef to include hamburger and beef patties was justified. The commenters pointed out that the covered product specified by the 2008 Farm Bill is ''ground beef,'' which has its own regulatory standard of identity separate from hamburger and beef patties. One commenter also noted that the interim final rule's definitions of ''ground lamb'' and other ground meats do not similarly specify that patties made from such ground meats are covered items and suggested that this disparity appears to ''favor'' non-beef patties with possible exemption from the rule, to the disadvantage of beef patties. Another commenter stated that had Congress intended a more expansive range of processed food products to be subject to COOL, it would have specifically included them,

particularly where all other processed foods are categorically exempt from COOL requirements. The commenter urged the Agency to follow the intent of Congress and promulgate a rule that encompasses products captured in the regulatory standard of identity for ''ground beef'' and not extend the scope to items meeting other definitions.

Agency Response: The Agency does not agree that commodities covered by the statute can be construed to cover fabricated steaks. Fabricated steaks are produced to appear like a whole muscle cut of meat but are in fact constructed from many different cuts of meat. Therefore, they are clearly not a ''muscle cut'' and, because the product is not ground nor is it sold as ground, it is not ground beef either.

The Agency agrees that a regulatory standard of identity for the term ''ground beef'' exists, but does not agree that it was the intent of Congress to limit the mandatory COOL program to only those products marketed under that standard of identity. Further, the Agency believes it is not reasonable that consumers would understand why beef that is ground and marketed as ''ground beef'' would require labeling and beef that is ground and marketed as ''hamburger'' would not. The regulatory standard of identities for ''ground beef'' and ''hamburger'' are virtually identical with the minor exception of ''added fat'' being allowed in beef that is ground and marketed as ''hamburger''. Both are often marketed in bulk form or in patty form and can sit side by side in the fresh or frozen meat case with only the name capable of distinguishing them apart. Therefore, ground beef and hamburger sold in bulk or patty form are covered commodities under this final rule.

However, in its analysis of the issue and the points raised by the commenters, the Agency does concur with several of the commenters that beef that is ground and marketed as ''imitation ground beef'', ''imitation hamburger'', and ''beef patty mix'' should be exempt in this final rule. Products marketed under these standards of identities typically contain a number of binders and extenders that are not covered commodities and are not assumed by the consumer to be interchangeable with beef that is ground and marketed as ''ground beef'' or ''hamburger''. Because the Agency does not view such variety meat items as beef heart meat and tongue meat (which are not allowed in ''ground beef'' or ''hamburger'') as covered commodities, requiring such products as ''beef patty mix'' to carry COOL information would also require the beef processing industry to identify the country of origin for such beef variety meat items in the event they would be used as extenders in commodities like ''beef patty mix'', which does allow their inclusion. The Agency believes that the costs associated with this segregation and identification of beef variety meats would be overly burdensome and that these items were not intended to be included as covered commodities under the statute. Accordingly, these recommendations are adopted in part.

Farm-Raised

Summary of Comments: Some commenters expressed concerns regarding the definition of farm-raised in the fish and shellfish interim final rule. The commenters recommended that the Agency exempt molluscan shellfish from the COOL requirements.

Agency Response: As the statute defines the term covered commodity to expressly include shellfish, the Agency does not have the authority to provide an exemption for molluscan shellfish. In addition, in the Agency's experience in three years of enforcement of the COOL program for fish and shellfish, it has found good compliance with the labeling of this commodity. Accordingly, this recommendation is not adopted in this final rule.

Lamb

Summary of Comments: Several commenters requested that the regulation be revised to clarify the definition of lamb includes mutton. One of these commenters stated that because there are no common terminology differences describing the meat from different age groups of species such as cattle, swine, goat or chicken, the Agency was in error to exclude mutton in the definition of lamb in the interim final rule. The commenter further stated while specific definitional differences between lamb and mutton exist for other regulatory purposes, it is appropriate to cover meat from all ages of sheep in the rule as is done for the other livestock species.

Agency Response: The Agency agrees that it is appropriate to include mutton under the definition of lamb as no distinctions describing meat from the different age groups of other livestock species were made. Accordingly, this recommendation has been adopted in this final rule.

NAIS-Compliant System

Summary of Comments: Two commenters recommended that the Agency eliminate the definition of a ''NAIS-compliant system'' and replace it with the existing regulatory definition of ''Official identification device or method'' that is contained in 9 CFR § 93.400. The commenters contend that this modification is necessary so as to not mislead the public into believing that they must comply with all of the requirements of USDA's NAIS (e.g., premises registration) in addition to maintaining current compliance with existing official identification systems. The commenters stated this change would be consistent with USDA's assurance that the NAIS ''does not alter any regulation in the Code of Federal Regulations or any regulations that exist at the State level.''

Agency Response: The Agency continues to believe that voluntary use of the National Animal Identification System is an acceptable and easy option packers may utilize to obtain origin information on livestock. However, the Agency believes that the definition of NAIS-compliant should be deleted as it is not necessary. However, with regard to the commenter's suggestion to replace this definition with the definition of ''Official identification device or method'', because they may be applied to imported animals, other identification devices or methods alone cannot be used to establish the U.S.-origin of livestock. Producers' management records will need to be used in conjunction with these other identification devices and methods to establish U.S. origin. Additional discussion on the NAIS provision is included later in the Comments and Responses section.

Processed Food Item

Summary of Comments: Numerous commenters suggested that the Agency should narrow its definition of a processed food item so that more food items sold at retail are covered commodities subject to COOL requirements. The commenters recommended that roasting, curing, smoking and other steps that make raw commodities more suitable for consumer use should not be the criteria for categorizing these commodities under the statutory exemption of an ingredient in a processed food item and therefore exempt from labeling. Many commenters stated that USDA's overly expansive definition of a processed food item, which comes from the 2004 interim final rule for fish and shellfish, should not be used for the other covered commodities. The commenters stated that although the definition was possibly appropriate for fish and shellfish, it resulted in a much more substantial percentage of meat and nut covered commodities sold at retail being exempt. The commenters urged USDA to develop different definitions of a

processed food item for each specific category of covered commodity so that as many items as possible would be covered by the mandatory COOL program.

One commenter noted that relying on a change in character for the definition of processed food is fine as long as the Agency makes it clear that the change in character is such that a consumer would not use the items in the same manner as they would the original commodity. Thus, as spelled out in the 2003 proposed rule, not all forms of cooking (e.g., frying, broiling, grilling, boiling, steaming, baking, roasting), as well as canning would constitute a change in character. This commenter added that for muscle cuts of beef, lamb, pork, chicken and goat, chilling, freezing, cooking, seasoning or breading should not render those products as being processed food items as defined in the interim final rule and therefore exempt from mandatory COOL. The commenter expressed their support for the alternative proposal in the 2003 proposed rule in which a covered commodity that is further processed (i.e., cured, restructured, etc.) should not be excluded unless the covered commodity is mixed with other commodities such as a pizza or TV dinner. The commenter noted that by exempting restructured and cured products from COOL, the rule excludes bacon, hams and corned beef briskets from labeling. The commenter further stated that Congress clearly stated that pork was included in COOL, but exempting bacon and hams would exclude a significant portion of the pork market. This commenter also recommended that orange juice be included as a covered commodity since orange juice represents a major component of orange consumption in the U.S. Finally, the commenter noted that in a series of decisions, CBP determined that roasting of pistachios, pecan nuts and coffee beans did not constitute substantial transformation.

Several commenters urged AMS to revise the provision in the processed food item definition that states that combining different covered commodities renders those products being exempt from mandatory COOL. The commenters recommended that if covered commodities are combined, yet are still recognizable, they should be required to be labeled. The commenters suggested that broadly exempting all mixed vegetables as a processed food item is an excessive exclusion because most consumers would expect to have frozen mixed vegetables labeled.

Several commenters agreed with the Agency's definition of a processed food item. The commenters noted that the processed food definition that the Agency adopted in the interim final rule for fish and shellfish is simple, straightforward and provides a bright line test retailers and others can use to understand which covered commodities are subject to mandatory COOL and which are not.

One commenter recommended that the Agency designate that items with distinct varietal names within a generic category of products be deemed different products and excluded when two or more are combined. Several commenters recommended that any fresh-cut produce item, even those not combined with another substantive food item or other covered commodity, be included in the definition of a processed food item. By taking a raw agricultural commodity, washing it, then cutting it, the commenters contend that a company does change the product from a raw agricultural commodity to a ready-to-eat food item—similar to the way cooking changes a raw meat product to a ready-to-eat food, and that cutting fruit for a value-added package alters the commodity at retail.

One commenter noted that the interim rule provides that ''the addition of a component (such as water, salt, or sugar) that enhances or represents a further step in the preparation of the product for consumption would not in itself result in a processed food item.'' The commenter stated that as water, salt and sugar are used only as examples, it is apparent that the Agency assumes other ingredients, too, may merely enhance or further prepare the product for consumption such that they would be insufficient to render a product a processed food item.

Several commenters expressed that they were unclear when water, salt or sugar can be added to a product and still be covered and questioned why a marinated steak is exempt even though ''marinated'' is not defined. These commenters urged the Agency to clarify what is meant by enhancement steps that do not result in a processed food item. Some of these commenters further urged that the clarification encompass a much broader scope of flavorings, seasonings, etc., beyond water, salt or sugar.

One commenter expressed support for the fact that the addition of a component (such as water, salt, or sugar) does not represent a processing step that changes the character of a covered commodity. The commenter recommended that USDA also expressly state that the addition of water-based or other types of flavoring—such as a solution containing water, sodium phosphate, salt, and natural flavoring purportedly injected into meat muscle-cut commodities by some retailers—does not represent a processing step that changes the character or identity of a covered commodity. Another commenter agreed with the provision in the 2003 proposed rule in which oil, salt and other flavorings were considered non-substantive ingredients. In addition, the commenter also expressed support for the position laid out in the 2003 proposed rule that ''needle-tenderized steaks; fully-cooked entrees containing beef pot roast with gravy; seasoned, vacuum-packaged pork loins; and water-enhanced case ready steaks, chops, and roasts * * * would not be considered processed food items''.

One commenter discussed products made up of a variety of fresh pork and beef muscle cuts that have been injected with a patented solution which, beyond simple water, salt, or sugar, also includes sodium phosphates, potassium lactate and sodium diacetate. The commenter stated that these products should be considered to be ''covered commodities'' and, therefore, subject to mandatory COOL requirements on the grounds that these products have not undergone a change in character and that because consumers cannot ascertain any difference between such enhanced products and those covered commodities that do not contain such additional ingredients, such an exemption would only confuse consumers.

Several commenters asked that the list of examples of processed food items be expanded. One commenter strongly supported inclusion of the following examples for the types of meat and other covered commodities that should be exempt as a processed food item as defined under the definition and recommended to be included in the final rule: flank steak with portabella stuffing, steakhouse sirloin kabobs with vegetables, meatloaf, meatballs with penne pasta, pot roast with roasted vegetables, cooked and smoked meats, blue cheese angus burgers, cured hams, bacon, sugar cured bacon, dry cured meats, corned beef briskets, marinated pork loin, marinated pork chops, marinated London broil, prosciutto rolled in mozzarella cheese, fruit salad, cooked and canned fruits and vegetables, orange juice, fresh apple sauce, peanut butter, candy coated peanuts, peanut brittle, etc.

Agency Response: The Agency believes that the two-part definition of a processed food item defined in the final rule is an appropriate interpretation of the intent of Congress excluding covered commodities that are

an ingredient in a processed food item and provides a bright line differentiating the steps that do and do not result in a commodity being covered by mandatory COOL.

Furthermore, the Agency does not agree that such processing steps as cutting or enhancing render a covered commodity a processed food item. The definition of a processed food item uses examples of the addition of components ''such as water, salt, or sugar''; however, such further preparation steps would also be meant to include other examples of enhancements that do not fundamentally alter the character of the product. For example, dextrose is a sugar, phosphate is a salt, and beef stock and yeast are flavor ''enhancers''. In addition, the Agency believes that enhancement with enzymatic tenderizers, such as ficin and bromelain, do not by themselves change the character of the covered commodity and therefore do not result in a processed food item.

The Agency does agree that specific examples of products that are and are not covered can help the trade and consumers understand which products are covered by mandatory COOL. Therefore, the Agency will work to provide interpretive documents on its Web site and in print materials developed that will provide as many examples as necessary.

Produced

Summary of Comments: One commenter noted that the interim final rule defines the term ''produced'' in the case of a perishable agricultural commodity, peanuts, ginseng, pecans, and macadamia nuts as grown. The commenter recommended that since some plants may be transplanted across national borders, the Agency should define the term produced as harvested.

Agency Response: The Agency agrees with the commenter that the term ''harvested'' more accurately defines the term ''produced'' in the case of a perishable agricultural commodity, peanuts, ginseng, pecans, and macadamia nuts and has adopted this change in this final rule.

Country of Origin Notification

Exemption for Food Service Establishments

Summary of Comments: Several commenters disagreed with the exemption for food service establishments from the COOL requirements. These commenters contend that since items sold in these types of establishments represent a major segment of the food industry, these establishments should not be exempt from labeling.

Agency Response: The statute contains an express exemption for food service establishments. Therefore, this exemption is retained in this final rule.

Method of Production

Summary of Comments: Two commenters focused on details for the designation of method of production for fish and shellfish (wild-caught or farm-raised). One commenter sought a more thorough definition and suggested the inclusion of the following additional information: for wild fish, the method of harvest (i.e., long-line, gillnet, trawl, purse seine, line and hook); and for farm-raised fish (1) whether it is a genetically engineered, and (2) the feed conversion ratio (quantity of fish feed required for producing the end-commodity). Another commenter expressed concern about fraudulent labeling of method of production for fish and shellfish. The commenter noted that there may be an economic incentive to mislabel farm-raised fish as wild caught fish, and the commenter provided evidence from a small sample they had investigated in November and December 2005 during the off-season for wild-caught salmon. They purchased 17 salmon products labeled as wild-caught, tested them for the presence of a synthetic coloring agent fed to farmed salmon to turn their flesh pink-orange and found that 7 of the 17 salmon products labeled as wild-caught were determined through this analysis to be actually farm-raised. The commenter noted that supermarkets were more likely to label wild-caught salmon correctly than fish markets.

Agency Response: The statute only provides the Agency with the authority to require that fish and shellfish carry notification for country of origin and that the covered commodity distinguish between wild fish and farm-raised fish. Therefore, the additional labeling information cannot be required. With regards to the mislabeling of method of production identified by the commenter, in addition to conducting retail surveillance enforcement activities, the Agency also conducts supplier audits that are intended to prevent such mislabeling.

Labeling Covered Commodities of United States Origin

Summary of Comments: Two commenters requested that the Agency revisit the regulatory requirements for labeling products as U.S. origin when they have been further processed or handled in a foreign country. One commenter recommended that USDA delete entirely § 65.300(d)(2), and include language instead that expressly prohibits the retention of a United States origin label for any commodity that undergoes additional processing or handling in a foreign country. Another commenter asked that the Agency clarify what it means by the terms ''handled'' and ''processed'' in the context of this provision. The commenter asked USDA to clarify if it intends to include meat products in this section of the interim final rule, and noted that the statute indicates that meat product processed in another country would need to list that particular country on the label. They pointed out that the interim final rule appears to have no discussion or rationale explaining why a U.S. product processed in another country would be eligible to maintain a U.S. origin label.

Another commenter requested that a fourth option for labeling imported products be considered in the final rule. This commenter pointed out that there are no provisions for labeling product that is caught or harvested in the U.S. and substantially transformed in another country. For example, wild fish that is caught in the U.S. and then subsequently filleted in ''Country X'' must be marked as a product of ''Country X'' with no allowable reference to the original U.S. source. The commenter suggested an alternative would be to label covered commodities harvested in the U.S. but substantially transformed in another country as ''Harvested in U.S., processed in Country X.'' The commenter concluded that such a label would provide complete information for the consumer while maintaining the original U.S. source of the product.

Agency Response: With regards to the origin determination of United States country of origin products that are exported to a foreign country for processing prior to reimportation back into the United States, the Agency has deleted the express provision in the final rule as the Agency believes that the provision may have caused confusion. However, to the extent that existing regulations, including those of CBP and FSIS allow for products that have been minimally processed in a foreign country to reenter the United States as Product of the U.S., nothing in this final rule precludes this practice. In addition, to the extent that additional information about the production steps that occurred in the U.S. is permitted under existing Federal regulations (e.g., CBP, FSIS), nothing in this final rule precludes such information from being included.

Labeling Imported Products That Have Not Undergone Substantial Transformation in the United States

Summary of Comments: Four commenters offered suggestions relating to labeling imported products that have not undergone substantial transformation in the United States. One commenter contended that COOL was illogical, unworkable and misleading. Another commenter elaborated on the labeling for transshipped fish and shellfish. The commenter pointed out that many fish and shellfish products are imported into the U.S. from countries that are not necessarily the country where the fish or shellfish were harvested. The commenter recommended that the final rule for fish and shellfish require labeling to identify the location where the seafood was harvested or raised. Another commenter noted that frozen products of ''foreign origin,'' as determined by tariff laws, already are subject to country of origin labeling under a comprehensive set of regulations administered by CBP.

Agency Response: With regard to the origin of imported covered commodities, the Agency follows existing regulations, including those of CBP, regarding the origin of such products and requires that such origin be retained for retail labeling.

Labeling Muscle Cut Covered Commodities of Multiple Countries of Origin That Include the United States

Summary of Comments: Numerous commenters stated that commodities derived from animals born, raised, and slaughtered in the U.S. should be labeled as ''Product of the U.S.'' and not be diluted or commingled with a multiple country of origin label such as, ''Product of the U.S., Canada, and Mexico''. These commenters stated that the provision allowing this in the interim final rule directly contradicts the statute and diminished consumer choice and producer benefits that could have resulted from this program.

These commenters stated that the statute established four major categories for meat labeling to enable consumers to have the right to know specifically where their food originates. Other commenters stated that the regulation does not contain specific provisions allowing packers to label meat from livestock exclusively born, raised, and processed in the U.S. as mixed origin and that packers doing so were acting in violation of the regulation. Several members of Congress also commented that it was not the intent of Congress that all U.S. products or such product from large segments of the industry be combined with the multiple countries of origin category nor was it provided for by the statute. The members of Congress stated that the purpose of COOL is to clearly identify the origin of meat products, providing consumers the most precise information available.

One commenter stated that while processors claim that segregating U.S. meat from foreign meat would be burdensome, processors already easily segregate meat by grade (e.g. USDA. Choice vs. USDA. Prime) and by source (e.g., USDA Certified Organic vs. nonorganic) and that segregating the origin of U.S. and foreign meat is no more complicated or burdensome.

In contrast, several other commenters expressed support for a more flexible approach to labeling notifications for meat products sourced from multiple countries of origin. One commenter indicated that retailers desperately need the flexibility to commingle product in the display, especially in a full-service display case. The commenter stated that disallowing the commingling of meat from multiple origins including the U.S. is a logistical nightmare for retailers. Another commenter stated that the interim final rule affords critically important flexibility to retailers and the entities that provide covered commodities to retailers with respect to the labeling of covered commodities derived from animals of U.S. origin, as well as animals with multiple countries of origin. Another commenter urged the Agency to apply flexibility consistently for all sectors of the chain including retailers.

Several commenters stated their belief that Congress intended to provide flexibility between categories A and B afforded in the rule based on the permissive language of the statute for those two categories, which is supported by the absence of that very flexibility in subsections 282(a)(2)(C) and (D). The commenters noted that in subsections 282(a)(2)(C) and (D) of the statute, Congress used the word ''shall'' with respect to types of covered commodities identified in those categories, imported for immediate slaughter and foreign country of origin, and arguably limited the Agency's discretion to interpret how those categories of product should be labeled.

Another commenter recommended the same flexibility given to processors to label meat from animals of U.S. origin with a mixed origin label should be given to the labeling of meat from animals imported directly for slaughter. The commenter recommended that the final rule give processors the flexibility to make use of the order of countries mandated under this category (Product of Country X and the U.S.) when processing a production run including animals of U.S., mixed origin, or imported for immediate slaughter.

Another commenter noted that little attention seems to have been paid to the amount of exported meat this rule is putting at risk, which is now sold to Mexico, compared to the small amount of cattle born in Mexico and exported to the United States. Another commenter added that producers on the border States rely on Mexican cattle imports. The commenter warned that by establishing these categories, the value of finished Mexican cattle will be discounted at the packing plant because they will have to be sorted on the line in the plant, which costs the packer money. Another commenter stated that COOL has effectively cut off U.S-Mexican cattle trade and that because of COOL the packers have advised producers that they will not buy Mexican cattle.

One commenter indicated that the multiple country label prescribed in the rule for product derived from U.S.-raised pigs, regardless of their birth country, provides packers, processors and retailers with flexibility in labeling pork products. The commenter further stated that this labeling flexibility, in turn, gives flexibility to U.S. pork producers handling those pigs, which will reduce costs associated with label changes, product segregation, and duplicate stock keeping units at all levels of the pork marketing system.

Several commenters noted that the ''Product of the U.S.'' label allows for the labeling of pork products exclusively from pigs born, raised and slaughtered in the U.S. These commenters stated it will be effectively used for pork products offered to buyers who find value in that label. The commenters fully support the approach taken in the interim final rule. The commenters also expressed that including U.S.-raised pigs in the mixed origin labeling category also meets the ''common sense'' test as well as the economic reality of today's U.S. pork industry since more than 95 percent of the total end weight of a Canadian-born weaned pig is actually produced in the U.S. using U.S. feed, labor and buildings.

A final commenter wrote that the Agency should harmonize the final rule with the NAFTA Marking Rule. This commenter specifically encouraged the Agency to adopt a final rule that uses the tariff-shift method to determine the country of origin of covered commodities that are produced in the United States using ingredients or raw

materials imported from Canada or Mexico.

Agency Response: The Agency recognizes that the multitude of different production practices and possible sales transactions can influence the value determinations made throughout the supply chain resulting in instances of commingling of animals or covered commodities, which will have an impact when mixing occurs. However, the Agency feels it is necessary to ensure information accurately reflects the origin of any group, lot, box, or package in accordance with the intent of the statute while recognizing that regulated entities must still be allowed to operate in a manner that does not disrupt the normal conduct of business more than is necessary. Thus, allowing the marketplace to establish the demand of categories within the bounds of the regulations will provide the needed flexibility while maintaining the structure needed to enforce these clearly defined categories. If an initiator of the claim chooses to mix commodities of different origins within the parameters of a production day, or if the retailer mixes product from different categories willingly, the resulting classification must reflect the broadest possible terms of inclusion and be labeled appropriately. The initiator may elect to segregate and specifically classify each different category within a production day or mix different sources and provide a mixed label as long as accurate records are kept. Likewise, if a retailer wants to mix product from multiple categories, it can only be done in multi-product packages and then only when product from the different categories is represented in each package in order to correctly label the product. With regard to producer benefits, while some U.S. producers may hope to receive benefits from the COOL program for products of U.S. origin, the purpose of the COOL program is to provide consumers with origin information.

With regard to the commenter's recommendation that the same flexibility given to processors to label meat from animals of U.S. origin with a mixed origin label should be given to the labeling of meat from animals imported directly for slaughter, this final rule allows muscle cut covered commodities derived from animals that are born in Country X or Country Y, raised and slaughtered in the United States, that are commingled during a production day with muscle cut covered commodities that are derived from animals that are imported into the United States for immediate slaughter as defined in § 65.180, the origin may be designated as Product of the United States, Country X, and (as applicable) Country Y.

With regard to using the tariff-shift method to determine the country of origin of covered commodities that are produced in the United States using ingredients or raw materials imported from Canada or Mexico, the Act specifically defines the criteria for covered commodities to be labeled with a U.S. origin declaration. Accordingly, this recommendation is not adopted.

Labeling Commingled Covered Commodities

Summary of Comments: Several commenters expressed concerns about the notification requirements for commingled covered commodities. One produce supplier was concerned about their liability in the event ready-to-eat produce they supplied was commingled with other product from multiple vendors at retail stores. Another commenter voiced opposition to an alphabetical listing on a product sourced and commingled from multiple countries of origin. The commenter expressed support for the provision in the voluntary COOL guidelines published in 2002 (67 FR 63367) that would have required country of origin for each raw material source of the mixed or blended retail item by order of predominance by weight.

Another commenter expressed support for the current provision. The commenter noted that the current interim final rule states that for these products, the country of origin must be designated in accordance with CBP marking regulations, promulgated pursuant to the Tariff Act. To the extent that this will prevent a conflict between the two laws, this commenter supports the Agency's recent approach.

One commenter asked for clarification about the use of the word ''or,'' the phrase ''and/or,'' commas, slashes or spaces to separate the country names in a label listing multiple countries of origin for commingled commodities. The commenter pointed out that a comma would be equivalent to ''and,'' which might not be appropriate for labeling a single produce item that could not physically have been produced in two countries.

Agency Response: As noted in both the interim final rule for fish and shellfish and the interim final rule for the other covered commodities, the Agency determined that requiring origin notification either by alphabetical listings or by listing the countries of origin by order of predominance by weight was overly burdensome to the regulated industries.

As commingling of the same type of products at retail containing different origin is permissible under this final rule, the Agency cannot prohibit the commingling of like products from multiple vendors at retail. The COOL program is not a food safety program. Commingling like products is a commercially viable practice that has been historically utilized by retailers and any decision to continue this practice has to be determined by the retailer.

The Agency does not agree that the statute allows for the use of terms and phrases such as ''or, may contain, and/or'' that only convey a list of possible origins. The intent of the statute is to require retailers to provide specific origin information to consumers. In addition, such disjunctive labeling schemes are not allowed under CBP regulations except under special circumstances.

For commingled covered commodities, each country must be listed. The Agency does not agree that the regulations should mandate how this list of countries be punctuated with commas, slashes or spaces. The Agency believes that it is best left to individual businesses to decide how to convey the information in a way that is neither confusing nor misleading.

Labeling Ground Meat Covered Commodities

Summary of Comments: Several commenters expressed the opinion that the provision in the interim final rule that states, ''when a raw material from a specific origin is not in a processor's inventory for more than 60 days, the country shall no longer be included as a possible country of origin'' is too long. The commenters stated that in practical terms, this provision appears to allow a processor to have 60 days to correct the label of a product to delete specific country(s), even though that country's product may no longer exist in its inventory. The commenters provided the example that a processor on day one could have product from the U.S. and Canada, and then on day 7 run out of product from the U.S., and yet could continue using the ''Product of U.S. and Canada'' label for another 53 days. Commenters feared this provision could be easily abused by meat processors. Several commenters requested that the Agency reconfirm the appropriateness of this time-frame and explain the rationale and justification for this duration. Another commenter urged AMS to clarify this issue for the public record because in the opinion of the

commenter, the wording in this section of the rule is confusing and potentially misleading.

Another commenter pointed out this provision was intended to reflect the sourcing processes of commercial grinders and not to require them to change their labels simply because the market had changed and source product was more expensive from one country than another. As the statutory language that is interpreted here is directed to retailers, this commenter understood this provision to apply to retailers as well, and respectfully requested that the Agency confirm the applicable standard in the final regulation.

One commenter was concerned about the impact that mandatory country of origin labeling will have on imported beef, particularly ground beef at retail. The commenter stated that mandatory origin labeling will add significantly to meat production costs at a time of rapidly increasing food costs, and consumers will have to bear the additional expense resulting from the labeling regime. The commenter was concerned, therefore, that retailers will be induced to simplify their labeling obligations by excluding imported and certain domestic beef from ground beef in order to minimize the resulting increase in the costs that will be associated with compliance.

Agency Response: As already stated, the intent of the authorizing statute was for consumers to have available to them for the purposes of making purchasing decisions accurate information pertaining to the country of origin of certain covered commodities sold at retailers as defined. That said, the Agency believes this program should be implemented in as least burdensome a manner possible while still achieving this objective.

In developing the interim final rule, the Agency spent considerable time analyzing the current production systems of the ground meat supply chain and retail industry so that this program could be implemented in a manner that was least burdensome as possible while still providing consumers with accurate information to base their purchasing decisions on. It also must be stressed that if a country of origin is utilized as a raw material source in the production of ground beef, it must be listed on the label. The 60-day in inventory allowance speaks only to when countries may no longer be listed. The 60-day inventory allowance is an allowance for the Agency' enforcement purposes for when the Agency would deem ground meat products as no longer accurately labeled.

The Agency arrived at the 60-day allowance during its analysis of the ground meat industry. In this analysis, the Agency determined that in the ground beef industry a common practice is to purchase lean beef trimmings from foreign countries and mix those with domestic beef trimmings before grinding into a final product. Often those imported beef trimmings are not purchased with any particular regard to the foreign country, but the cost of the trimmings due to currency exchange rates or availability due to production output capacity of that foreign market at any particular time. Because of that, over a period of time, the imported beef trimmings being utilized in the manufacture of ground beef can and does change between various foreign countries.

As large scale beef grinders can have in inventory at any one time, several days worth of beef trimmings (materials to be processed into ground beef) from several different countries and have orders from yet other foreign markets, or from domestic importers, trimmings from several foreign countries that will fulfill several weeks worth of ground beef production, the Agency determined that it was reasonable to allow the industry to utilize labels representing that mix of countries that were commonly coming through their inventory during what was determined to be a 60-day product inventory and on order supply. To require beef grinders to completely change their production system into grinding beef based on specific batches was determined to be overly burdensome and not conducive to normal business practices, which the Agency believes was not the intent of the statute. Further, because beef grinders often purchase their labeling material in bulk, if a given foreign market that a beef grinder is sourcing from is no longer capable of supplying product, the interim final rule allowed that grinder a period of time to obtain new labels with that given country of origin removed from the label.

With regard to the commenters' concerns with the potential of ''abuse'' of this allowance by processors, the Agency does not believe widespread abuses of this provision will occur and will address any issues with this provision during routine compliance reviews. As such and for all the reasons stated above, the Agency continues to believe that the 60-day inventory allowance is appropriate and was retained in this final rule.

With regard to if this 60-day inventory allowance is made for retailers or for suppliers of covered commodities, the Agency has made no distinction in this final rule and, as such, the same requirements would apply. Other concerns raised, including the impact of this regulation on the utilization of imported meat and consumer food costs are addressed in the economic impact analysis contained in this action.

Remotely Purchased Products

Summary of Comments: Two commenters expressed the opinion that the provision on remotely purchased products is too weak because it allows country of origin information to be disclosed either on the sales vehicle or at the time the product is delivered to the consumer. The commenters stated that for origin information to be of use to consumers, it must be disclosed at the time that purchasing decisions are made. The commenters recommended that the country of origin or the possible country(ies) of origin could be listed on the sales vehicle (i.e. Internet site, home delivery catalog, etc.) as part of the information describing the covered commodity for sale. Another commenter encouraged the Agency to maintain the provision for remotely purchased products with the additional flexibility of permitting the declaration either on the sales vehicle or on the product at the time of delivery.

Agency Response: The Agency believes that the provision contained in the interim final rules, which allows the information to be provided either on the sales vehicle or on the product itself, provides flexibility to suppliers and also provides useful information to consumers. If a consumer desires to purchase a covered commodity of a certain origin, they can so specify to the retailer.

Marking

General

Summary of Comments: Several commenters addressed the question of preponderance of stickering and sticker efficacy. The commenters recommended that the Agency define ''majority'' as it applies to bulk display stickering for perishable agricultural commodities. The commenters noted that the Agency has recognized that when fresh produce is stickered with origin information, every product may not bear a sticker for a variety of reasons, and that a majority of the product should have stickers. Two commenters recommended that the Agency define ''majority'' as it applies to bulk display stickering for perishable agricultural commodities as ''50% plus one'' so that the industry has a specific understanding for compliance. Another commenter agreed with this definition, citing that the FDA found 50% product

labeling sufficient even in a case of human health. The commenter argued that such a standard would therefore be more than sufficient for adequate disclosure of country of origin. Another commenter recommended that the Agency not require more than a majority of produce items in any given bin to carry a PLU sticker. The commenter added that price look up (PLU) stickers, which include information on the supplier that initiates the country of origin claim, should not only satisfy a retailer's obligation to inform consumers of the country of origin of the item, it should satisfy the retailer's country of origin recordkeeping obligation as well.

Another commenter expressed concern that the lack of a specific minimum labeling requirement could ultimately require suppliers to have multiple containers and packaging inventories available. The commenter stated that a producer supplying fruit for bulk sale that is not currently stickering fruit may now be required by retailers to sticker individual pieces of fruit because the rule only ''encourages'' retailers to use placards or other methods. The commenter recommended that the rule establish a specific minimum standard to ensure greater consistency in compliance.

As it pertains to fish and shellfish, another commenter suggested that the Agency allow the use of statements such as ''wild and/or farm-raised'' or ''may contain'' in addition to allowing the use of ''check box'' labeling options to minimize the cost of labeling while still providing the required information for the consumer.

Agency Response: As stated in the preamble of the August 1, 2008, interim final rule, the Agency understands that stickering efficacy is not 100%. Further, the Agency believes that under normal conditions of purchase, consumers would likely be able to discern the country of origin if the majority of items were labeled regardless if additional placards or other signage was present. Accordingly, the Agency does not believe it is necessary to modify the language with respect to this provision. The Agency will address the issue of preponderance of stickering in its compliance and enforcement procedures, as applicable, to ensure uniform guidance is provided to compliance and enforcement personnel.

With regard to this use of ''may contain'' and ''and/or'' statements, as previously stated, the Agency does not agree that the statute allows for the use of terms and phrases such as ''or, may contain, and/or'' that only convey a list of possible origins. Rather the Agency believes that the intent of the statute is to require retailers to provide specific origin information to consumers. In addition, such disjunctive labeling schemes are not allowed under CBP regulations except under special circumstances.

Signage Over Bulk Display Cases

Summary of Comments: Several commenters expressed concern that the language authorizing a list of ''all possible origins'' on a bulk container (such as a meat display case that may contain commodities from different origins) would inadvertently allow a retailer to hang a sign over the entire meat display case that stated that the entire display contains products from the U.S. and one or more countries, even if the display case contains only commodities from the U.S. The commenters contend that nothing in the law expressly permits such labels on displays, holding units, or bins to merely provide information regarding ''all possible origins'' of the commodities contained therein and recommended that the Agency add language to require that if a meat display case contains commodities from more than one country, the commodities must be physically separated according to their origins within the meat display case and a separate origin declaration must be associated with each section.

Another commenter stated that they understood that the Agency is concerned that a sign such as ''All beef is Product of the US'' might be interpreted by consumers to encompass beef products that are not covered by the statute because they are processed. In order to provide clarity, the commenter urged the Agency to provide ''safe harbor'' standards for language and placement in order to ensure that retailers are properly meeting their obligations.

One commenter noted that retailers have the discretion to use signs, placards or other communications to convey origin information. Another commenter noted that the interim final rule allows for a bulk container at retail level that contains commingled products to be labeled with the country or countries of origin. However, the commenter also pointed out that the rule is silent on whether the individual pieces contained in bins must also be labeled, which would be difficult for certain species (e.g., broccoli, lettuce). This commenter requested confirmation that, for commingled produce sold in bins or trays, individual pieces of produce do not need to be labeled provided their origins are displayed on appropriate signage by the retailer.

Agency Response: With regard to the provision in both interim final rules concerning bulk containers that allows the bulk container to contain a covered commodity from more than one country of origin, as previously stated, under this final rule it remains permissible provided that the notification representing a container, display case, bin or other form of presentation includes all possible country designations available for purchase.

With respect to the use of signage for bulk displays for meat covered commodities, as previously discussed, the Agency has observed that a vast majority of retailers are utilizing one sign for either the entire meat case or for an entire commodity type (i.e., chicken) to provide the country of origin notification. While the statute and this regulation provide flexibility in how the country of origin information can be provided, the Agency believes that the use of such signage could be false or misleading to consumers. The Agency encourages retailers to review signage that they have used in the implementation of the fish and shellfish program for alternative methods of providing COOL information.

With regard to comment concerning the labeling of individual pieces of produce, the rule provides flexibility in how the country of origin information may be conveyed. Thus, this final rule does not contain a requirement that individual pieces of product must be labeled with country of origin information. However, retailers may request that suppliers use specific methods of conveying origin information through contractual arrangements with their suppliers.

Abbreviations

Summary of Comments: Several commenters requested additional guidance on acceptable abbreviations, and they provided a variety of recommendations to the Agency about specifying approved abbreviations. These commenters all favored the use of country abbreviations when marking country of origin declarations. One commenter requested that a select group of countries be permitted for abbreviation to include New Zealand, Guatemala, South Africa, Argentina and Australia. Another commenter said that abbreviations would serve a useful purpose on product labels and recommended that a list of reasonable abbreviations be developed that could be used by processors and retailers (e.g., CAN for Canada).

Other commenters appreciated the Agency's recognition of the need to abbreviate the names of some countries

using abbreviations from CBP. The commenters recommended that the language in section (e) be reworded to remove the first sentence (''In general, abbreviations are not acceptable.''). The commenters reasoned that the available space on product labels (e.g., price look-up [PLU] sticker) or bills of lading is scarce. The commenters further stated that it is important for the industry to be able to convey origin information on both of those vehicles for several reasons. Information on the product itself (through a PLU sticker, rubber band, twist tie, tag, etc.) is particularly important because it informs the consumer at point of purchase and moves with the product to the home. When industry can include the information on a bill of lading, it allows companies to use existing records as the statute requires. The commenters suggested that the Agency remove the requirement that a key to abbreviations be included with documents (each time or even once), because the industry is well aware of the abbreviations used and their meanings.

Several commenters suggested that the Agency rely on the ISO 3166 country codes maintained by the International Standardization Organization. One commenter disagreed with the Agency's determination that such abbreviations may not be readily understood by the majority of consumers. One commenter added that in addition to the ISO country codes, CBP recognizes country codes as do other federal agencies such as the Bureau of the Census. The commenter pointed out that the United Nations also recognizes both the two letter and three letter ISO country codes. Another commenter requested that a list of 3-digit country abbreviations be developed and allowed to identify the countries of origin. The commenter noted that these 3-digit codes would not be confused with 2-digit codes used in the U.S. to identify individual States.

One commenter indicated that in the event the Agency retains its current prohibition on abbreviations for consumer information, the Agency must be clear that origin information in records and paperwork can be maintained with any acceptable abbreviations. The commenter added that they strongly support the ability to utilize labeling of a U.S. State, region or locality in which a product is produced to meet label standards as product of United States. In addition, the commenter stated that they support the ability to use State abbreviations, which is standard practice in many current State labeling programs and is readily accepted identification by consumers. One commenter described a customer who had a requirement to list the State name in addition to the U.S. This commenter asked if it would be permissible to abbreviate State names when more than one needs to be listed (e.g., WA, CA, AZ). The commenter suggested putting the State abbreviations in brackets after USA (e.g., USA (CA, AZ)).

Agency Response: As previously stated, the Agency believes that the limited application of abbreviations that unmistakably indicate the country of origin is appropriate. CBP has a long history of administering the Tariff Act and has issued a number of policy rulings with respect to the use of abbreviations. Because many of the covered commodities subject to the COOL regulation are also subject to country of origin marking under the Tariff Act, it would be inconsistent with CBP regulations to allow for the use of additional country abbreviations under the COOL program. With regard to the use of ISO codes that many commenters made reference to, CBP does allow for the use of such codes for statistical and other purposes with respect to e-commerce; however, CBP does not allow for the use of ISO codes for marking purposes. The Agency has obtained a more complete list of abbreviations from CBP and has posted this information to the COOL Web site.

With regard to State labeling for perishable agricultural commodities, peanuts, pecans, macadamia nuts, and ginseng, the Agency does believe that the majority of consumers are familiar with the standard State abbreviations used by the U.S. Postal Service and because the purpose of the COOL program is to provide consumers with origin information, it is reasonable to allow such abbreviations. Allowing this flexibility will address industry's concerns about the limited space on PLU stickers, twist ties, rubber bands and other package labels typically used for produce. Under this final rule, abbreviations may be used for state, regional, or locality label designations for perishable agricultural commodities, peanuts, pecans, macadamia nuts, and ginseng covered commodities whether domestically harvested or imported using official United States Postal Service abbreviations or other abbreviations approved by CBP. With regard to the use of abbreviations by suppliers or retailers in conveying origin information in records or documentary systems, there are no restrictions on the use of abbreviations as long as the information can be understood by the recipient. Accordingly, these recommendations are adopted in part.

State, Regional, and Locality Labeling

Summary of Comments: Several commenters raised issues related to the provision for state, regional, and locality labeling of covered commodities. Three commenters requested that state, regional, and locality labeling be acceptable for covered meat commodities. One commenter sought confirmation that the provisions on State markings in the interim final rule apply also to States, regional and local labels of importing countries. This commenter understood that identification by region and locality is acceptable provided it is nationally distinct, but requested that this provision be clarified in the final rule.

Another commenter noted that USDA is silent on the use of locality labeling, and requested that the final rule recognize that locality labeling is likewise permitted by the statute. The commenter stated that many retailers source products locally and choose to provide this information to consumers because it is meaningful to these customers.

Agency Response: With regard to the commenters' recommendation to allow State, regional, and locality labeling for meat covered commodities, the statute contains an express provision for this type of labeling for perishable agricultural commodities, peanuts, pecans, macadamia nuts, and ginseng. As such, the Agency does not have the authority to extend this provision to any other covered commodities. With regard to the commenter's request that the Agency clarify that this provision applies to imported perishable agricultural commodities, nuts, and ginseng and that locality labeling is also permitted, clarifying language has been added to section 65.400(f). Accordingly, these recommendations have been adopted in part.

Supplier Responsibilities

Summary of Comments: Several commenters expressed concerns with the Agency's assertion in the interim final rule that ''the supplier of a covered commodity that is responsible for initiating a country of origin claim * * * must possess or have legal access to records that are necessary to substantiate that claim.'' The commenters maintained that the Agency's jurisdiction stops with the initiator of the origin claim of a covered commodity, which in the case of meat products is the slaughter facility. The commenters further stated that the COOL law authorizes only the Secretary

of Agriculture to conduct an audit for verification purposes, not the packer, and that furthermore, the Secretary may not require a person that prepares, stores, handles, or distributes a covered commodity to maintain a record of the country of origin of a covered commodity other than those maintained in the course of the normal conduct of the business of such person. The commenters argued that the 2008 Farm Bill language states that producer affidavits are sufficient in making a country of origin claim; therefore, packers or processors should not be given legal access to producers' records. The commenters recommended that the Agency eliminate language referencing ''legal access'' from the final regulation as they contend it is not authorized by the law.

Two commenters suggested that the Agency should require the original suppliers of covered products to substantiate the chain of custody and the accuracy of country of origin information. One commenter expressed the opinion that it is unreasonable that the liability ultimately is placed on the meat processor to provide country of origin information when they are relying on the word of livestock producers, who may or may not be providing accurate information.

Another commenter pointed out the importance of maintaining origin information by all segments of the industry to verify origin claims and to ensure the integrity of the labeling program. This commenter also stated that it is important that producers not be asked for unreasonable information that goes beyond what would be considered acceptable or the lack of which is a pretext for penalties against a producer or producers. The commenter recommended that the Agency provide a safe harbor of reasonable or acceptable information that can be asked of a producer to help avoid the possibility of unreasonable requests for information that would be considered unfair or an effort to single out a particular producer.

One commenter suggested removing the provision in the rule regarding supply chain traceability in the recordkeeping requirement. The commenter stated that the purpose of COOL is to inform consumers about the origin of the covered commodities and that the added recordkeeping requirement of traceability is not necessary and is an added regulatory burden.

One commenter noted that while producers are not directly affected by the COOL law, Section 282(3) of the statute expressly requires that ''anyone engaged in the business of supplying a covered commodity provide country of origin information.'' The commenter further stated that in the case of animals imported from Canada, this necessarily implicates Canadian producers who must present health papers to APHIS at the border. The commenter suggested further clarification is needed about the manner in which that origin will be tracked and conveyed to AMS should proof of origin be required further down the supply chain.

One commenter noted that Agency representatives have repeatedly advised the industry of the need for significantly more extensive records than are currently maintained in order to verify COOL. The commenter strongly urged the Agency to clarify in the final rule that the statutory prohibition of any new record requirement is recognized and accepted. This commenter also encouraged the Agency to provide a definitive declaration that suppliers may convey COOL information to retailers through any method of their choosing in order to comply with the regulation. The commenter stated that in current trade practice, some have been confused as to whether supplier labeling of COOL on the actual produce item is required, or whether multiple documents such as invoices or bills of lading must contain COOL information. The commenter suggested that USDA should make clear that COOL information may be provided to the retailer in any form. The commenter further suggested that relationships in the marketplace—not the statute—will determine in what form that communication will take place, including whether individual product eventually is labeled by a supplier.

One commenter stated that the most practical approach to meeting the COOL requirements for most covered commodities is for those producers to print the country of origin on all retail packaging for case and consumer ready, and on all case end labels for all products destined to be store processed or packaged by the retailer. The commenter suggested that producers will not need to continuously transmit country of origin information to the retailer on an order by order basis. Instead, package and case labeling in conjunction with the USDA establishment number (used to identify producer) and the lot or batch number (used to identify the specific lot of live animals from which products are derived) will already be on pre-packaged labels and case end codes. The commenter further stated that retailers already retain invoices to meet other reporting requirements, which identify the producers of the product, and can be used to satisfy the COOL recordkeeping obligation. The commenter also stated that there will be no required change in business processes for retailers but producers will be required to add accurate origin information to the retail packaging and/or case end labels.

One commenter identified a business process flow they hoped could be simplified with the intervention of the Agency. In import situations where a consolidated shipment could have multiple origins covered by one Bill of Lading (for example, a combined load of Navel Oranges from Australia and South Africa, and Clementines and Lemons from Chile) the commenter currently notes each line item on the documentation, which is an added step in the paperwork process. The commenter requested that the Agency provide suggestions in the rule about alternative means to comply with COOL on Bills of Lading, invoices, or packing slips.

One commenter suggested that the Agency consider a longer period, such as 10 business days, to provide records upon request to any duly authorized representatives of USDA for COOL compliance purposes. Two commenters referenced the statutory prohibition against the Agency requiring records that are not maintained in the normal conduct of business. These commenters noted that such records are deemed sufficient to satisfy the Bioterrorism Act's mandate to be able to identify immediate previous source and immediate subsequent recipient of foods. The commenters recommended that the Agency likewise accept multiple sourcing records for purposes of the mandatory country of origin labeling requirement for intermediary suppliers to identify their immediate previous source and immediate subsequent recipient.

Agency Response: It is correct to say that the Agency's authority to audit ends at the slaughter facility as the slaughter facility is the first handler of the covered commodity and the Agency has deleted the requirement that suppliers have legal access to records from this final rule. However, as initiators of origin claims, packers must have records to substantiate those claims. With regard to records maintained in the course of the normal conduct of the business of such person and producer affidavits, the final rule states that producer affidavits shall be considered acceptable records that suppliers may utilize to initiate origin claims, provided it is made by someone having first-hand knowledge of the origin of the covered commodity and identifies the covered commodity

unique to the transaction. With regard to the commenter's assertion that producers not be asked for unreasonable information that goes beyond what would be considered acceptable, the Agency has provided examples of records kept in the normal course of business that may be used to substantiate origin claims. As previously stated, packers can utilize producer affidavits to obtain origin information. This final rule has been drafted to minimize the recordkeeping burden as much as possible while still providing the Agency with the information necessary to verify origin claims.

With regard to how suppliers may provide origin information to retailers, this final rule states that the information can be provided on the product itself, on the master shipping container, or in a document that accompanies the product through retail sale. It is up to the supplier and their retailer customers to decide which method is most appropriate. The Agency agrees that bills of lading, invoices, and packing slips may be used to provide origin information. Ultimately, retailers must ensure that covered commodities displayed for retail sale have country of origin designations.

With regard to the recommendation to allow a 10 day period to supply documentation to USDA officials, the Agency believes that the 5 business days provided in the August 1, 2008, interim final rule provides suppliers and retailers reasonable and appropriate time to provide records to USDA upon request. With regard to the commenters' reference to the statutory prohibition against the Agency requiring records that are not maintained in the normal conduct of business and that such records are deemed sufficient to satisfy the Bioterrorism Act's mandate to be able to identify immediate previous source and immediate subsequent recipient of foods, records maintained in the normal conduct of business can be used to satisfy the COOL recordkeeping requirements. However, the Agency recognizes that suppliers and retailers may need to make modifications to their existing records in order to provide the necessary information to be able to substantiate COOL claims as provided for in the statute.

Visual Inspection

Summary of Comments: Several commenters expressed support for the Agency policy to accept visual inspection as a means to verify the origin of livestock during the period between July 15, 2008 and July 15, 2009. Specifically, the majority of commenters supported the Agency's decision to authorize sellers of cattle to conduct a visual inspection of their livestock for the presence or absence of foreign marks of origin, and that such visual inspection constitutes firsthand knowledge of the origin of their livestock for use as a basis for verifying origin and to support an affidavit of origin. They noted that visual inspection for verification of origin is particularly important to the trade during the period between July 15, 2008, and whenever the final regulation is published. The commenters stated that producers now have livestock without all of the origin documentation that may be necessary and that it would be very difficult, and in some cases impossible, to recreate the paper trail on many of these animals. Other commenters noted that the visual inspection of animals for import markings is a highly reliable, cost effective method of verification of origin and will significantly reduce compliance costs for livestock producers. The commenters recommend that visual inspection be made a permanent method on which to base origin claims.

Agency Response: The Agency initially allowed for a transition period for the period July 16, 2008, through July 15, 2009, during which producers may issue affidavits based upon a visual inspection at or near the time of sale that identifies the origin of livestock for a specific transaction. Affidavits based on visual inspection may only be issued by the producer or owner prior to, and including, the sale of the livestock for slaughter. The Agency agrees with the commenters that affidavits based on visual inspection reduce the burden on producers. Accordingly, the Agency is making the ability to utilize visual inspection as the basis for forming an affidavit permanent.

Producer Affidavits

Summary of Comments: Numerous commenters expressed support for the ''Universal Country of Origin Affidavit/Declaration'' that was developed by consensus across the livestock and chicken industry to serve as verification from producers to slaughter facilities for the country of origin of livestock. Several commenters requested that these agreed-upon documents be incorporated in the final rule. Several commenters also argued that producers should not be asked for unreasonable information. They urged AMS to consider a standardized producer affidavit that would accompany an animal from its first sale throughout the chain of custody.

Several commenters expressed support for the Agency's decision to allow composite affidavits where a producer can put together lots of cattle for sale and have one new affidavit for that lot based on the affidavits received for each animal, or lot of animals, that was combined in the new lot. The commenters also expressed support for the ability for producers to file an ''evergreen'' or ''continuous'' affidavit with the buyers of their livestock saying that, until otherwise noticed or revoked, all the cattle they will deliver to that buyer will be of a specific origin.

One commenter disagreed that a producer affidavit in conjunction with animal ID records can be deleted after 1 year when a majority of breeding stock lives beyond 5 years and 95% of cattle in the U.S. on July 15, 2008 were not close to slaughter age. The commenter was of the opinion that documentation and retention of affidavits needs to last longer if the Agency has to audit and trace back meats.

Agency Response: The Agency believes the Universal Country of Origin Affidavit/Declaration that was developed by consensus across the livestock and chicken industry will assist the industry in implementing the rule in as least burdensome manner as possible. While the statute and this final rule allow for the use of producer affidavits, because the statute does not provide the Agency with authority to regulate producers, the Agency cannot mandate the use of such affidavits.

The Agency recognizes that animal production cycles vary greatly and depending upon which records are used for origin verification, retention of documents should be commensurate with the claim being affirmed through an affidavit or other means of declaration. However, the Agency only has the authority to require record retention for covered commodities. As the initiator of origin claims for meat, packers may specify the length of time records need to be maintained by entities outside the packer's system.

National Animal Identification System (NAIS)

Summary of Comments: Commenters had mixed opinions about relying on NAIS as a safe-harbor for COOL compliance. Numerous commenters supported the provision in the interim final rule stating that voluntary participation in NAIS program will comply with COOL verification requirements. The commenters that support the use of NAIS stated that official USDA 840-tags can serve as a

universal passport for an animal during its lifetime indicating the animal is of U.S. origin, no matter how many times ownership of the animal changes during its lifetime. Commenters strongly encouraged the Agency to utilize Radio Frequency Identification (RFID) tags in NAIS to allow verification of country of origin at the speed of commerce and stated that official NAIS USDA 840–RFID tags for livestock represent the simplest way for producers to assist in the marketing of their animals to ensure compliance with COOL.

One commenter recommended that NAIS should be made mandatory. Two commenters suggested that the Agency could alleviate the record keeping burden by simply requiring all foreign cattle to bear a permanent mark that defines their origin. They suggested that this will not only aid commerce by reducing paperwork, but it will also enhance compliance.

Three commenters expressed support for reliance on other existing animal identification systems. One commenter noted that USDA/APHIS currently operates the National Scrapie Eradication Program (NSEP), which includes a regulated animal identification program. By regulation, feeder and slaughter sheep that are imported from Canada must carry official permanent identification. The commenter urged AMS to help processors and others recognize the relatively straight-forward nature of proving animal origin in the sheep industry. Two commenters pointed out that livestock producers who participate in ''Age and Source Verified'' programs administered by USDA should also be in compliance with COOL for both origin and verification claims.

Another commenter stated that identification of animal origin by ear tag is a cause for concern. This commenter noted that USDA has not provided guidance about what records will suffice for imported animals, stating only that for animals that are part of an official identification system, such as the Canadian cattle identification system, ear tags will suffice for proving origin at the slaughterhouse. The commenter was concerned with having requirements imposed because of a specific animal health concern, such as Canadian ear tags on cattle, ensnared in separate regulations for an entirely different and unrelated purpose. The commenter stated that this could restrict Canada's abilities to adapt its national cattle identification system to changing environments or technologies in the future.

A final commenter warned that the acceptance of an ear tattoo does not meet the needs of modern industry practices. Due to issues associated with the speed of commerce, recordkeeping, accuracy and overall effectiveness of the program, the commenter stated that the Agency should only allow a hot iron brand on all live foreign cattle.

Agency Response: The Agency believes that voluntary use of the National Animal Identification System is an easy option packers may utilize to obtain origin information on livestock. The Agency has also made modifications to this provision for clarity. The Animal Identification Number (AIN) is defined in the Code of Federal Regulations as ''A numbering system for the official identification of individual animals in the United States providing a nationally unique identification number for each animal. The AIN contains 15 digits, with the first 3 being the country code (840 for the United States), the alpha characters USA, or the numeric code assigned to the manufacturer of the identification device by the International Committee on Animal Recording. The AIN beginning with the 840 prefix may be used only on animals born in the United States.'' As stated in the interim final rule published on September 18, 2008, (73 FR 54059), the AIN version starting with 840 is prohibited for use on animals born outside the United States. Therefore, under this final rule, packers that slaughter animals that are tagged with an 840 Animal Identification Number device without the presence of any additional accompanying marking (i.e., ''CAN'' or ''M'') may use that information as a basis for a U.S. origin claim. Packers that slaughter animals that are part of another country's recognized official system (e.g. Canadian official system, Mexico official system) may also rely on the presence of an official ear tag or other approved device on which to base their origin claims. With regard to the commenter's concern regarding having requirements imposed because of a specific animal health concern, such as Canadian ear tags on cattle, in separate regulations for an entirely different and unrelated purpose, this regulation does not impact regulations pertaining to animal health or importation. In addition, use of official ear tags as the basis of origin claims is just one option that can be utilized to obtain origin information.

The other comments received relevant to making NAIS mandatory and allowing only hot iron brands on live foreign cattle are outside of the scope of this rulemaking. Accordingly, these recommendations have been adopted in part.

Retailer Responsibilities

Summary of Comments: Numerous commenters addressed issues relating to the retailer recordkeeping provisions of COOL. One commenter stated that the Agency has offered simple, effective rules for recordkeeping by retailers. One commenter recommended that in § 65.500(c)(1), the Agency put the last sentence of the paragraph first (''For pre-labeled products, the label itself is sufficient evidence on which the retailer may rely to establish the product's origin.''). The commenter also requested that the Agency state specifically that retailers need not maintain any new or additional records documenting origin for those products that are pre-labeled on the product itself or on the box/container when the box/container is visible to consumers, such as when it is used as part of a retail display.

One commenter suggested sample and common technological standards such as the portable document format (PDF) or use of a common and interoperable database file system such as Microsoft Excel to enable both industry and the Agency to adopt a common computing platform. Another commenter suggested that the Agency should refer to the two different types of documents required to be maintained by retailers as Verification Records and Supplier records. The commenter suggested that the Agency should clarify in the final regulation that the information to satisfy both requirements may be on the same or different documents, provided all of the requirements are met. Several commenters encouraged the Agency to permit retailers to rely on the records that are currently maintained for Bioterrorism Act purposes.

One commenter strongly supported the specific recognition that retailers may rely upon pre-labeled products as ''sufficient evidence'' of the country of origin. The commenter stated that this is an important safe harbor for the produce and retail industries as an increasing share of fresh produce now arrives at retail stores pre-labeled with the country of origin. The commenter expressed concern that the IFR and the Agency's Q&A documents are not written in a way that conveys this information accurately, which is creating significant confusion throughout the produce distribution chain. The commenter recommended that the Agency clearly define pre-labeled products to include all produce items that bear a COOL declaration, regardless of any other information that may or may not be affixed directly to the produce item. In turn, the Agency must then specify that additional

recordkeeping at retail is not required for pre-labeled products as the vendor who supplied the pre-labeled produce has the responsibility to verify the claim. One commenter recommended that the Agency only require retailers to maintain the country of origin for covered products in the retail store for as long as the product is on hand.

Agency Response: With regard to pre-labeled covered commodities, the Agency has added a definition of pre-labeled in this final rule. In addition, the Agency has clarified that for pre-labeled products, the label itself is sufficient information on which the retailer may rely to establish the product's origin and no additional records documenting origin information are necessary. However, the Agency does not agree with the commenter's recommendation to change the order of the sentences with respect to the provision on pre-labeled products.

With regard to the recommendation that the Agency adopt a common computing platform, the Agency does not have the authority to mandate a specific system. In addition, the Agency believes that retailers and suppliers should have the flexibility to choose whatever system works best in their particular operation. Accordingly, this recommendation is not adopted.

With regard to the suggestion that the Agency should refer to the two different types of documents required to be maintained by retailers as Verification Records and Supplier records and that the Agency should clarify in the final regulation that the information to satisfy both requirements may be on the same or different documents provided all of the requirements are met, the Agency has added language to the preamble to indicate that the supplier and origin information needed to satisfy the COOL recordkeeping requirements can be in the same document or different documents. However, the Agency does not believe that any changes to how the required documents are referenced are necessary. Accordingly, these recommendations have been adopted in part.

The Agency recognizes that several commenters encouraged the Agency to permit retailers to rely on the records that are currently maintained for Bioterrorism Act purposes. To the extent that these records contain the necessary information to meet the COOL recordkeeping requirements, the Agency agrees that records currently maintained to meet the requirements under the Bioterrorism Act can also be used to comply with the COOL recordkeeping requirements.

With regard to the recommendation that the Agency only require retailers to maintain the country of origin for covered products in the retail store for as long as the product is on hand, under this final rule, records and other documentary evidence relied upon at the point of sale to establish a covered commodity's country(ies) of origin must be either maintained at the retail facility for as long as the product is on hand or provided to any duly authorized representative of USDA in accordance with § 65.500(a)(2). For pre-labeled products, the label itself is sufficient information on which the retailer may rely to establish the product's origin and no additional records documenting origin information are necessary. Accordingly, this recommendation has been adopted in part.

Enforcement

Liability Shield

Summary of Comments: Several commenters discussed the concept of a ''liability shield'' found in the interim final rule for fish and shellfish, but deleted from the interim final rule for the remaining covered commodities. The commenters noted that the Agency had previously contemplated a ''shield'' from liability for entities subject to the law on the theory that they should be permitted to reasonably rely on information provided by their suppliers. The commenters recommended that the Agency add a clarification to the final rule that will assure retailers that they will not be penalized when a retailers' non-compliance results from the conduct of others. The commenters further stated that the interim final rule holds suppliers responsible for providing retailers with country-of-origin information and that because the statutory liability standard only penalizes retailers for ''willful'' violations, it follows that a retailer should not be held responsible for its supplier's failure to provide COOL information or its supplier's provision of inaccurate information. The commenters recognized that the Agency deleted the safe harbor language from the interim final rule for remaining covered commodities because that language created a negligence standard of liability instead of the willfulness standard specified in the 2008 Farm Bill. These commenters agreed that a willfulness standard is required by statute. However, they also stated that an explicit safe harbor should be restored to the rule, in addition to the willfulness standard the statute requires. Thus, paralleling the language that had been used in the safe harbor provision for the fish and shellfish interim rule, a safe harbor provision one commenter suggested new regulatory language, ''No retailer shall be held liable for a violation of the Act by reason of the conduct of another unless the retailer acted willfully in the same regard''. Another commenter strongly urged the Agency to reinstate the liability shield in the final rule, but given the change in the liability standard as a result of the 2008 Farm Bill, recommended alternative language.

Agency Response: As noted by the commenters, the Agency deleted the liability shield language from the interim final rule for the remaining covered commodities because that language created a negligence standard of liability instead of the willfulness standard specified in the 2008 Farm Bill. Because of the willfulness standard contained in the 2008 Farm Bill, the Agency does not agree that the liability shield is necessary. However, to the extent that the liability shield language provides the industry with assurances that they will not be held liable for the conduct of others, the Agency believes that the liability shield is useful. Therefore, the Agency has included the liability shield provision in this final rule and has modified the language to reflect the willfulness standard contained in the 2008 Farm Bill. Accordingly, this recommendation has been adopted.

Assurances Against Meat Recalls for COOL Violations

Summary of Comments: Several commenters expressed concerns about how FSIS or other federal agency may use a country of origin labeling failure as a reason to recall pork and other meat products. These commenters noted that the law does not amend any food safety law and that it is not a food safety program. The commenters further stated since it is a marketing program, failure to properly label the origin of products in the retail meat case should not force a product recall. Many producers reported to be confused and fearful that this law will be used to assert product liability claims. These commenters requested clarification regarding the scope of the COOL law to eliminate this confusion. They asked that USDA clarify that any violation of COOL will not trigger a recall of meat products.

Agency Response: As noted by the commenter, the intent of the law and this rule is to provide consumers with additional information on which to base their purchasing decisions. COOL is a retail labeling program and as such does not provide a basis for addressing food safety. Food products, both imported

and domestic, must meet the food safety standards of the FDA and FSIS and are subject to any recall requirements imposed by those agencies. The Agency does note that FSIS did publish an interim final rule (73 FR 50701) on labeling to address concerns with compliance of their voluntary labeling approval authority and requirements of the COOL program. In addition, FSIS provided guidance that inspection program personnel are not to take any action to enforce the FSIS interim final rule until further notice and that during the next six months, FSIS will defer to the AMS program of outreach and education to ensure that there is compliance.

Timeframe for Implementation

Summary of Comments: Numerous commenters provided suggestions about the Agency's informed compliance period during which the Department will provide education and outreach to aid industry in understanding the requirements of the COOL program.

Three commenters expressed appreciation for the 6-month phase-in period articulated in the rule and stated that the Agency must be prepared to provide producers, suppliers, retailers, and consumers with assistance to understand the regulations through guidance documents, seminars, and other resources that are readily available to the public during this period of informed compliance. One commenter pointed out that it will be critical for the AMS to work with officials with FSIS to ensure that there is common understanding between the two USDA agencies regarding questions that meat processing plant operators and federal meat inspectors may have. One commenter urged the Agency to withhold publishing a final rule until after the conclusion of the 6-month period in order to maximize the lessons learned under the interim final rule. Another commenter encouraged the Agency to provide as much time as possible to acclimate both retailers and those involved within the supply chain to the new requirements of the regulations prior to any enforcement.

Several commenters expressed support that the requirements of the interim final rule do not apply to covered commodities produced or packaged before September 30, 2008. However, these commenters noted that many firms in the industry procure packaging materials for a year's worth (or more) of production. The commenters recommended that given the short amount of time between the release of the Interim Final Rule and the effective date, companies subject to the rule be given a year from the effective date to use up existing packaging inventories, provided those packaging inventories were acquired prior to the effective date of the rule. One of these commenters expressed concern that a 6-month grace period will prove insufficient to implement a verifiable records system. This commenter stated that an 18-month implementation period will allow current nut products in the marketplace to rotate out and allow those in the field sufficient time to comply with all aspects of COOL. Another commenter was concerned about ensuring a reasonable phase-in period for the rule so that suppliers could use existing inventory to the greatest extent possible. This commenter supported a one-year phase-in as opposed to 6 months because the shipping season for table grapes and tree fruit generally runs from May through October. Therefore, a 6-month phase in from October through March would be of little benefit for this food sector. Another commenter noted that retailers, processors, and producers have expressed their willingness to make a good faith effort to comply with COOL; however, it is not clear that the 6-month industry education and phase-in period is sufficient. They strongly encouraged USDA to extend this period to 12 months in order that issues like recordkeeping and auditing the supply chain can be fully understood.

Agency Response: In response to the commenters' request that the Agency not publish the final rule until after the six month period of education and outreach, the Agency is moving forward in an expeditious manner of publishing the final rule in order to provide retailers and suppliers as well as all other interested parties with the requirements for a permanent program. The Agency will allow sufficient time for the regulated industries to adapt to the changes in this final rule and will continue to provide for a period of education and outreach. The Agency believes that the six month period provided for in the interim final rule is adequate time for retailers and suppliers to adapt to the COOL program requirements. In addition, the Agency will continue to ensure that retailers and suppliers are educated on the Agency's compliance and enforcement procedures so that the regulated industries have clear expectations as to how the Agency will enforce this rule. With regard to using up existing packaging inventories, this final rule does not require that covered commodities are individually labeled with COOL information. Retailers can use placards and other signage to convey origin information.

Miscellaneous

WTO/NAFTA Trade Agreements

Summary of Comments: Several commenters expressed concern that COOL may violate U.S. trade commitments under the World Trade Organization and the North American Free Trade Agreement, and that provisions of the COOL regulation ignore the reality of an integrated North American meat and livestock industry. Two foreign governments expressed that the amendments passed with the 2008 Farm Bill are still cause for concern, and that as they have consistently expressed in the past, COOL requirements should be consistent with the United States' international trade obligations. One commenter pointed out that the Codex General Standard for the Labeling of Prepackaged Food was considered adequate in the U.S. system for a number of years and will continue to remain the standard for retailers outside of the U.S. The commenter further stated that it remains the most practical, and also the most adaptable, to evolving commercial practice and growing international trade; and yet it is not the standard adopted in the COOL regulations.

One commenter stated that the COOL statute and regulation will likely result in discrimination against imported product, contrary to U.S. obligations under the WTO Agreement on Technical Barriers to Trade. The commenter indicated that despite changes in the law and the IFR that have made it less onerous for regulated firms to comply with the requirements of the regulation, COOL will still discriminate against imported cattle and beef. This commenter warned that the industry practice of importing cattle for feeding and/or slaughter will be discouraged by the increased complexity associated with the identification, segregation, and labeling requirements mandated for the resulting products to be sold at retail. This commenter suggested that the simplest solution would be to allow processors and retailers to label ground product with ''May contain U.S. and imported meat'' with the option to list the specific countries if the producer or its customers so desired. Another commenter acknowledged that the IFR makes some concessions to earlier complaints by trading partners with concerns regarding the compatibility of COOL with the WTO obligations of the United States.

Agency Response: With respect to the commenters' concern regarding

international trade obligations, the Agency has considered these obligations throughout the rulemaking process and concludes that this regulation is consistent with U.S. international trade obligations. Further, as described more fully in the Summary of Changes section of this rule, the Agency has made a number of modifications in this final rule that provide additional labeling flexibilities. In addition, the Agency has worked closely with USDA's Foreign Agricultural Service to educate U.S. trading partners on the requirements of COOL and to assist them in complying with the regulation.

In regards to a commenter's statement that when a food undergoes processing in a second country that changes its nature, the country in which the processing is performed shall be considered to be the country of origin for the purposes of labeling, existing CBP rules and regulations with respect to determining origin of imported products apply to the extent that it is permissible under the statute. However, it is not permitted under the statute to consider imported products that are substantially transformed in the U.S. to be of U.S. origin as they do not meet the definition of U.S. origin provided in the Act.

With regard to the comment to allow a label to state ''May contain U.S. and imported meats,'' the Agency does not believe this type of labeling meets the intent of the statute. Accordingly, this recommendation is not adopted.

COOL as a Food Safety Program

Summary of Comments: Commenters expressed differing opinions regarding whether or not COOL serves as a food safety program. Several commenters expressed the opinion that COOL is a retail labeling program that does not provide a basis for addressing food safety. The commenters argued that the U.S. has a safe food safety system; that all meat sold at retail, whether grown domestically or imported, must be inspected and declared safe for human consumption; and that country of origin labeling is solely a marketing tool. One commenter found it particularly problematic that mandatory COOL has been portrayed by some advocates as contributing to efforts to make America's food safe, yet there is no provision in the COOL statute or the interim final rule that prescribes food safety or inspection standards. Another noted that the food production, supply and retailing industry needs to help consumers understand that geography cannot become shorthand for food safety. Several commenters noted that Congressional intent is clear that COOL is not intended to be a traceability law, but merely to provide country of origin information to consumers. These commenters urged the Agency to implement COOL in a way that is true to its goal to inform consumers about where produce comes from, not create a new regulatory infrastructure. Other commenters noted their support for the provision of accurate information to consumers as required by the law and agreed with the Agency's statement in the preamble that this law is not a food safety law.

Two commenters wrote that COOL can serve as a risk management measure. One commenter suggested that developing countries, which may not have as stringent food safety regulations and/or have not implemented/enforced those regulations as rigorously as the U.S., may export hazardous food products. Another commenter referred to a GAO study that reported three elements of food-safety systems that were critical to respond to outbreaks of food borne illness: Traceback procedures that allow industry and government officials to quickly track food products to origin to minimize harm to consumers and the impact on business; cooperative arrangements between veterinarians and public health officials to document the names of suppliers and customers as well as the dates of delivery; and authority to recall a product from the market. The commenter noted that such food-safety systems depend on a verifiable chain of custody for food products that the COOL program can help institute. The commenter further stated that the COOL law provides for traceback provisions and for cooperative partnerships with states.

Agency Response: As previously stated, the COOL program is neither a food safety or traceability program, but rather a consumer information program. Food products, both imported and domestic, must meet the food safety standards of the FDA and FSIS. Food safety and traceability are not the stated intent of the rule and the COOL program does not replace any other established regulatory programs that related to food safety or traceability.

USDA COOL Labeling Surveys

Summary of Comments: Two commenters requested that USDA conduct nationwide retail surveys to gather information regarding country of origin labeling. One commenter requested that the Agency conduct a ''nationwide retail meat labeling survey'' within the year to discern the amount of product, the kind of product and the locations where exclusively U.S. labeled meat is being sold. The second commenter suggested that the Agency insert additional data entry points in the retail survey instrument used for existing retail reviews. The commenter encouraged the Agency to gather information relative to the availability and price of meat items by origin at the retail stores under review. Furthermore, the commenter requested this information be reported to the House Committee on Agriculture and the House Committee on Appropriations 60 and 90 days after the labeling law takes effect.

Agency Response: The Agency is currently reviewing possible methods to collect data relative to the availability and price of meat items by origin at the retail stores under review. The Agency will work with members of Congress to provide any information collected to the appropriate Congressional committees.

Existing State Programs

Summary of Comments: One commenter agreed that the Agency had properly concluded that the COOL law preempts conflicting federal and state laws. This commenter stated it is imperative that companies subject to the federal statute be subject to one uniform set of regulatory requirements. One commenter agreed that it is preferable for producers to have one law to govern compliance, but suggested it is also important that the maximum amount of product information be provided to consumers as intended by the COOL legislation. In the event of conflict, this commenter preferred that the Agency err on the side of more information to the consumer rather than less, and asked the Agency to allow the States maximum flexibility to enforce their own laws, if doing so will provide the most information to the consumer.

Agency Response: This rule has been reviewed under Executive Order 13132, Federalism. This Order directs agencies to construe, in regulations and otherwise, a Federal statute to preempt State law only where the statute contains an express preemption provision or there is some other clear evidence to conclude that the Congress intended preemption of State law, or where the exercise of State authority conflicts with the exercise of Federal authority under the Federal statute. This rule is required by the 2002 Farm Bill, as amended by the 2008 Farm Bill. While this statute does not contain an express preemption provision, it is clear from the language in the statute that Congress intended preemption of State law. The law assigns enforcement responsibilities to the Secretary and encourages the Secretary to enter into

partnerships with States with enforcement infrastructure to assist in the administration of the program.

Impacts on Livestock Producers and Meat Packers

Summary of Comments: Several commenters felt that a large portion of the implementation costs will be shouldered by the meat production and packing industry because there is little evidence that consumers are willing to pay more for products bearing country of origin information and that these additional costs will not be successfully passed through the supply chain. These commenters concluded that the costs of COOL implementation and compliance will be highly detrimental to the livelihood of numerous small meat processors. One meat packer observed that COOL will require the company to incur additional costs due to the recordkeeping and labeling requirements. Due to the nature of the business, the company relies on livestock producers to provide and verify origin information, yet as the originator of covered commodities derived from those animals, the burden of proof is on the company in the event the source information is ever questioned. Because there is no universal animal identification system in place to provide meat processors with proper background information, meat processors do not have readily available information with which to accurately label covered products. One commenter noted that COOL costs to livestock producers will be $9 per head. This commenter was concerned that cattle owners will end up paying all costs as other sectors of the supply chain work on margin. This commenter urged USDA to consider costs when implementing this law since extra costs would be detrimental to consumers and producers.

Numerous state and national pork producer organizations submitted comments contending that the majority of program costs would be driven by two factors: Disruption of product flow through packers caused by differentiated labels and record-keeping burdens for producers and packers.

One commenter stated that since the true costs of COOL are as yet vague, and the burden of who is going to pay for the cost of additional recordkeeping requirements and labeling is unknown, the recordkeeping and documentation requirements should be designed so American producers do not end up paying for COOL.

Agency Response: The Agency believes that firms and establishments throughout the supply chain for affected commodities will incur costs associated with the implementation of COOL. This includes producers, intermediaries, and retailers. Increased costs are likely to be absorbed by all firms and establishments throughout the supply chain and some costs may be passed on to consumers.

As previously stated, the Agency believes that voluntary use of the National Animal Identification System is a straightforward option packers may utilize to obtain origin information on livestock. In addition, following the implementation of the August 1, 2008, interim final rule, a coalition of representatives from throughout the livestock and meat industries established a universal affidavit to convey country of origin information. This rule provides flexibility in how the required country of origin information is conveyed along the supply chain, thus enabling firms to implement the requirements with the least possible disruption to cost-efficient production methods and trade flows.

Costs on Affected North American Industries

Summary of Comments: One commenter expressed concern that COOL will impose unnecessary costs on affected North American industries. The commenter stated that the substantial volume of two-way trade between Canada and the United States has been a testament to the integrated and cooperative nature of many of our industries and that trade with Canada supports more than 7.1 million jobs in the United States. The commenter further stated that trade is also vital in the agricultural sector where Canada is the largest single-country export market for the United States with more than US$15 billion in sales last year.

Agency Response: As discussed more fully in the Regulatory Impact Analysis, the results of the Computable General Equilibrium (CGE) model suggest that overall impacts on trade in livestock and meats will be relatively small. The rule allows considerable flexibility, thus enabling firms to implement the requirements with the least possible disruption to cost-efficient production methods and trade flows.

Marketing Exclusion of Imported and Certain Domestically Produced Meat

Summary of Comments: One commenter expressed concern about the impact that mandatory COOL will have on imported beef, particularly ground beef at retail. The commenter stated that mandatory origin labeling will add significantly to meat production costs at a time of rapidly increasing food costs, and consumers will have to bear the additional expense resulting from the labeling regime. This commenter was therefore concerned that retailers will be induced to simplify their labeling obligations by excluding imported and certain domestic beef from ground beef in order to minimize the resulting increase in the costs that will be associated with compliance. Another commenter reported that over the last several years, the total number of Mexican cattle crossing into the U.S. has ranged from 820,000 head to 1,200,000 per year, and that those numbers per year represent less than a two-week kill volume on a national basis. The commenter concluded that the loss to both the Mexican rancher and the U.S. producer will be considerable. Another commenter indicated that there is no question that while a vast majority of fresh beef in the retail sector is U.S. beef, it remains a huge question as to the benefit of identifying U.S. beef and adding costs to the producers and to consumers.

One commenter provided a more detailed assessment of potential costs associated with this legislation and its regulations. The commenter noted their belief that COOL is already causing economic losses and threatening the survival of the hog industry in Manitoba, Canada. The commenter pointed out that hog producers in Manitoba have developed an integrated supply chain with family hog farms in the mid-West U.S. by supplying over four million weanlings per year, and over one million finished pigs to packing plants in this area. Finally, the commenter stated that if the changes wrought in the marketplace by this legislation continue, Manitoba producers will lose about $200 million in finished hog sales to U.S. packers. This commenter reported that it is currently preparing an assessment of the immediate financial impact on its members and provided some examples of recent economic setbacks to producers.

Agency Response: The Agency believes that there may be some adjustment costs as industry adapts to the requirements of the rule. Over the longer run, however, the Agency believes that uncertainty will lessen and firms will continue to seek sources of livestock and meat products consistent with efficient production and marketing operations. It is believed that the major cost drivers for the rule occur when livestock or other covered commodities are transferred from one firm to another, when livestock or other covered commodities are commingled in the production or marketing process, and

when products are assembled and then redistributed to retail stores. In part, some requirements of the rule will be accomplished by firms using essentially the same processes and practices as are currently used, but with information on country of origin added to the processes. This adaptation generally would require relatively small marginal costs for recordkeeping and identification systems. In other cases, however, firms may need to revamp current operating processes to implement the rule. For example, a processing or packing plant may need to sort incoming products by country of origin and, if applicable, method of production in addition to weight, grade, color, or other quality factors. This may require adjustments to plant operations, line processing, product handling, and storage. Ultimately, it is anticipated that a mix of solutions will be implemented by industry participants to effectively meet the requirements of the rule.

Quantifying Benefits of COOL

Summary of Comments: One commenter expressed disappointment that the Department continues to deny any benefits or consumer desire for COOL. This commenter stated that since the COOL debate began, the number of consumers and organizations supporting the mandatory program has only expanded. The commenter further stated that numerous surveys and polls have indicated that consumers overwhelmingly support COOL and are willing to pay a premium for U.S.-origin labeled products and cited a June 2007 Consumer Reports poll, which found 92 percent of consumers think food should be labeled with country of origin information. Several other commenters noted that all consumers will pay to secure these labeling benefits demanded by a small minority.

Agency Response: As stated in the Regulatory Impact Analysis, the Agency concludes after reviewing many studies and comments, the economic benefits from COOL will be small and will accrue mainly to those consumers who desire country of origin information. Several analysts concluded that the main benefit is the welfare effect resulting from removing informational distortions associated with not knowing the origin of products. Numerous comments received during the rulemaking process indicate that there clearly is interest by some consumers in the country of origin of food. The mandatory COOL program may provide additional benefits to these consumers. However, commenters provided no additional substantive evidence to alter the Agency's conclusion that the measurable economic benefits of mandatory COOL will be small. Additional information and studies cited by commenters were of the same type identified in the IRIA—namely, consumer surveys and willingness-to-pay studies, including the most recent studies reviewed for this analysis. The Agency does not believe that these types of studies provide a sufficient basis to estimate the quantitative benefits, if any, of COOL.

Improvements That Reduce COOL Costs

Summary of Comments: One commenter noted that USDA has made the definition of a ''processed food item'' consistent with the definition used in the interim final rule for fish and shellfish, thereby reducing the number of affected establishments significantly. The commenter further noted that the estimated first-year implementation cost per producer operation is an average of $258, significantly lower than previously stated. This commenter regarded the implementation cost estimate as generally accurate. Another commenter noted that the use of producer affidavits and reliance on visual inspection should satisfactorily reduce costs of program compliance since import brands are highly visible. Another commenter pointed out that Congressional intent regarding the level of burden this law should impose on industry is clear. In the 2008 Farm Bill, Congress included provisions that expressly restrict USDA's ability to impact current business practices under the mandatory country of origin labeling law.

A final commenter added comments related to USDA's administration of the program. This commenter believes the final rule should make it clear that it is essential that all costs to administer this program must be supported by USDA's appropriated budget, and should not be paid by an assessment of user fees or divert USDA staff time and commitment from other AMS programs for which user fees are required.

Agency Response: The Agency is implementing COOL in the most cost-effective way available while still meeting Congressional mandates. The Agency currently receives appropriated funds for the administration of the mandatory COOL program for fish and shellfish. As the budget for fiscal year 2009 has not yet been passed, it is unknown at this time whether the COOL program will received additional appropriated funds to administer the program for all covered commodities.

COOL as an Economic Barrier to Entry

Summary of Comments: One commenter predicted that COOL will provide an economic barrier to entry for smaller companies that may wish to enter the food supply industry. This commenter noted that consumers who wish to avoid products that do not declare the country of origin are already free to do so. As a result, this commenter predicted that COOL will cost all consumers, but particularly those consumers who do not demand country of origin information.

Agency Response: The Agency agrees that COOL will benefit those consumers who are seeking and using country-of-origin information in their purchasing decisions. However, the costs will be absorbed by all consumers shopping at covered retailers. The Agency disagrees that COOL will provide a barrier to entry for smaller companies that may wish to enter the food supply industry. These companies may decide to supply products to retailers or food service companies not covered by COOL. There is little evidence to support conclusions that complying with COOL is more costly for small firms as opposed to larger firms. Indeed, the likelihood is that smaller-scale operations would have more flexibility in implementation of COOL requirements compared to larger operations.

Executive Order 12866—Final Regulatory Impact Analysis

USDA has examined the economic impact of this final rule as required by Executive Order 12866. USDA has determined that this regulatory action is economically significant, as it is likely to result in a rule that would have an annual effect on the economy of $100 million or more in any one year. This rule has been reviewed by the Office of Management and Budget (OMB). Executive Order 12866 and OMB Circular A–4 requires that a regulatory impact analysis be performed on all economically significant regulatory actions.

This final rule defines covered commodities as muscle cuts of beef, lamb, goat, pork, and chicken; ground beef, ground lamb, ground pork, ground goat, and ground chicken; wild and farm-raised fish and shellfish; perishable agricultural commodities; ginseng; peanuts; macadamia nuts; and pecans. Thus, this regulatory impact assessment addresses the economic impacts of all covered commodities as defined by law.

This regulatory impact assessment reflects revisions to the Interim Regulatory Impact Assessment (IRIA)

(73 FR 45106). Revisions to the IRIA were made as a result of changes to the rule relative to the August 1, 2008, interim final rule, and the interim final rule for wild and farm-raised fish and shellfish published October 5, 2004, **Federal Register** (69 FR 89708).

The Comments and Responses section includes the comments received and provides the Agency's responses to the comments. When substantially unchanged, results of the IRIA are summarized herein, and revisions are described in detail. Interested readers are referred to the text of the IRIA for a more comprehensive discussion of the assumptions, data, methods, and results.

Summary of the Economic Analysis

The estimated economic benefits associated with this final rule are likely to be small. The estimated first-year incremental costs for growers, producers, processors, wholesalers, and retailers are $2.6 billion. The estimated cost to the United States economy in higher food prices and reduced food production in the tenth year after implementation of the rule is $211.9 million.

Note that this analysis does not quantify certain costs of the rule such as the cost of the rule after the first year, or the cost of any supply disruptions or any other ''lead-time'' issues. Except for the recordkeeping requirements, there is insufficient information to distinguish between first year start up and maintenance costs versus ongoing maintenance costs for this final rule. Maintenance costs beyond the first year are expected to be lower than the combined start up and maintenance costs required in the first year.

While USDA recognizes that there appears to be consumer interest in knowing the origin of food based on the comments received, USDA finds little evidence that private firms are unable to provide consumers with country of origin labeling (COOL) consistent with this regulation, if consumers are willing to pay a price premium for it. USDA also finds little evidence that consumers are likely to increase their purchase of food items bearing the United States origin label as a result of this rulemaking. Current evidence does not suggest that United States producers will receive sufficiently higher prices for United States-labeled products to cover the labeling, recordkeeping, and other related costs. The lack of widespread participation in voluntary programs for labeling products of United States origin provides evidence that consumers do not have strong enough preferences for products of United States origin to support price premiums sufficient to recoup the costs of labeling.

Statement of Need

Justification for this final rule remains unchanged from the IRIA. This rule is the direct result of statutory obligations to implement the COOL provisions of the 2002 and 2008 Farm Bills. There are no alternatives to federal regulatory intervention for implementing this statutory directive.

The COOL provisions of the Act changed federal labeling requirements for muscle cuts of beef, pork, lamb, goat, and chicken; ground beef, ground pork, ground lamb, ground goat, and ground chicken; wild and farm-raised fish and shellfish; perishable agricultural commodities; ginseng; peanuts; macadamia nuts; and pecans (hereafter, covered commodities).

As described in the IRIA, the conclusion remains that there does not appear to be a compelling market failure argument regarding the provision of country of origin information. Comments received on the IRIA and previous requests for comments elicited no evidence of significant barriers to the provision of this information other than private costs to firms and low expected returns. Thus, from the point of view of society, such evidence suggests that market mechanisms would ensure that the optimal level of country of origin information would be provided.

Alternative Approaches

The IRIA noted that many aspects of the mandatory COOL provisions contained in the Act are prescriptive and provide little regulatory discretion for this rulemaking. As stated previously, this final rule provides flexibility in implementation to the extent allowed by the statute. Some commenters suggested that USDA explore more opportunities for less costly regulatory alternatives. Specific suggestions focused on methods for identifying country of origin, recordkeeping requirements, and the scope of products required to be labeled.

A number of comments on the IRIA and previous requests for comment suggested that USDA adopt a ''presumption of United States origin'' standard for identifying commodities of United States origin. Under this standard, only imported livestock and covered commodities would be required to be identified and tracked according to their respective countries of origin. Any livestock or covered commodity not so identified would then be considered by presumption to be of United States origin. As stated in this final rule, the Agency is allowing for producers to issue affidavits based upon a visual inspection at or near the time of sale that identifies the origin of livestock for a specific transaction. Affidavits based on visual inspection may only be issued by the producer or owner prior to, and including, the sale of the livestock for slaughter (i.e., meat packers are not permitted to use visual inspection for origin verification).

A number of commenters suggested that USDA reduce the recordkeeping burden for the rule. For retailers, this rule requires records and other documentary evidence relied upon at the point of sale by the retailer to establish a covered commodity's country(ies) of origin and method of production (wild and/or farm-raised), as applicable, to be either maintained at the retail facility or at another location for as long as the product is on hand and provided to any duly authorized representative of USDA, upon request, within 5 business days of the request. For pre-labeled products, the label itself is sufficient information on which the retailer may rely to establish the product's origin and method of production, as applicable, and no additional records documenting origin and method of production information are necessary. Under the August 1, 2008, interim final rule, retailers were required to maintain these records for a period of 1 year.

These changes in recordkeeping requirements should lessen the number of changes that entities in the distribution chain need to make to their recordkeeping systems and should lessen the amount of data entry that is required.

As noted in the IRIA, the law stated that COOL applies to the retail sale of covered commodities other than fish and shellfish beginning September 30, 2008. The implementation date for fish and shellfish covered commodities was September 30, 2004.

III. Analysis of Benefits and Costs

As in the IRIA, the baseline for this analysis is the present state of the affected industries absent mandatory COOL. USDA recognizes that most affected firms have already begun to implement changes in their operations to accommodate the law and the requirements of the August 1, 2008, interim final rule. Therefore, we will also discuss changes in the final rule analysis due to regulatory changes between the IFR and final rule.

Because the Act contains an effective date of September 30, 2004, for wild and farm-raised fish and shellfish and September 30, 2008, for all other covered commodities, the economic

impacts of the rule will be staggered by four years. The analysis herein of benefits and costs of the rule abstracts away from the staggered dates of implementation and treats all commodities as having the same effective date of implementation. Since a two-pronged approach was used to estimate the costs of this rule, direct fish and shellfish costs have been updated using more recent data and included to estimate the overall impacts of this rule on the United States economy even though labeling of fish and shellfish was implemented in 2004. The results of the analysis are not significantly affected by this simplifying assumption.

Benefits: The expected benefits from implementation of this rule are difficult to quantify. The Agency's conclusion remains unchanged, which is that the economic benefits will be small and will accrue mainly to those consumers who desire country of origin information. Several analysts conclude that the main benefit is the welfare effect resulting from removing informational distortions associated with not knowing the origin of products (Ref. 1). Numerous comments received on previous COOL rulemaking actions indicate that there clearly is interest by some consumers in the country of origin of food. The mandatory COOL program may provide additional benefits to these consumers. However, commenters provided no additional substantive evidence to alter the Agency's conclusion that the measurable economic benefits of mandatory COOL will be small. Additional information and studies cited by commenters were of the same type identified in the IRIA—namely, consumer surveys and willingness-to-pay studies, including the most recent studies reviewed for this analysis (Ref. 2; Ref. 3). The Agency does not believe that these types of studies provide a sufficient basis to estimate the quantitative benefits, if any, of COOL.

There are several limitations with the willingness-to-pay contingent valuation studies that call into question the appropriateness of using this approach to make determinations about the benefits to consumers of this rule. First, respondents in such studies may overstate their willingness to pay for a product. This typically happens because survey participants are not constrained by their normal household budgets when they are deciding which product or product feature they most value. Second, in most of these willingness-to-pay studies, consumers are not faced with the actual or full choices they would face at retail outlets, such as all of the labeling options allowed under this final rule. In practice, this may distort valuations obtained from such studies, leading to both over and underestimation. Finally, the results reported from these studies do not take into account changes in consumers' preferences for a particular product or product attribute over time.

As was the case in the interim final rule for fish and shellfish, a few commenters suggested that mandatory COOL would provide food safety benefits to consumers. As discussed in the IRIA, mandatory COOL does not address food safety issues. Appropriate preventative measures and effective mechanisms to recall products in the event of contamination incidents are the means used to protect the health of the consuming public regardless of the form in which a product is consumed or where it is purchased. In addition, foods imported into the United States must meet food safety standards equivalent to those required of products produced domestically.

Costs: To estimate the costs of this rule, a two-pronged approach was employed. First, implementation costs for firms in the industries directly affected by the rule were estimated. The implementation costs on directly affected firms represent increases in capital, labor, and other input costs that firms will incur to comply with the requirements of the rule. These costs are expenses that these particular firms must incur, and thus represent the opportunity costs of the rulemaking.

These costs, however, are not necessarily dead weight losses to the United States economy, as measured by the value of goods and services that are produced. This is simply because increases in capital, labor, and other inputs necessary to comply with the rule will benefit the providers of such inputs. In order to estimate the net decrease in economic activity as a result of this rulemaking, the implementation cost estimates were applied to a general equilibrium model to estimate overall impacts on the United States economy after a 10-year period of economic adjustment. The general equilibrium model provides a means to estimate the change in overall consumer purchasing power after the economy has adjusted to the requirements of the rule. In addition, since the Department has not identified a market failure associated with this rulemaking and therefore does not believe the rule would have measurable economic benefits, we believe this net decrease in economic activity can be considered the overall net costs (benefits minus costs) of this rulemaking.

Details of the data, sources, and methods underlying the cost estimates are provided in the IRIA and the previous PRIA's. This section provides the revised cost estimates and describes revisions made to the IRIA for this final analysis.

First-year incremental costs for directly affected firms are estimated at $2.6 billion, an increase of $0.1 billion over the IRIA due to the inclusion of fish and shellfish. Costs per firm are estimated at $370 for producers, $48,219 for intermediaries (such as handlers, importers, processors, and wholesalers), and $254,685 for retailers.

To assess the overall net impacts of the higher costs of production resulting from the rule, a computational general equilibrium (CGE) model of the model of the United States economy developed by USDA's Economic Research Service (ERS) (Ref 4) was used. The model was adjusted by imposing the estimated implementation costs on the directly impacted segments of the economy. That is, the costs of production for directly affected firms increase due to the costs of implementing the COOL program. These increased costs of production were imposed on the CGE model. The model estimates changes in prices, production, exports, and imports as the directly impacted industries adjust to higher costs of production over the longer run (10 years). The CGE model covers the whole United States economy, and estimates how other segments of the economy adjust to changes emanating from the directly affected segments and the resulting change in overall productivity of the economy.

Overall net costs to the United States economy in terms of reduced purchasing power resulting from a loss in productivity after a 10-year period of adjustment are estimated at $211.9 million in the tenth year. Domestic production for all of the covered commodities at the producer and retail levels is estimated to be lower, and prices are estimated to be higher, compared to the absence of this rulemaking. In addition, United States exports are estimated to decrease for all covered commodities. Compared to the baseline of no mandatory COOL, United States imports are estimated to increase for fruits and vegetables, cattle and sheep, hogs, chicken, and fish. United States imports of broilers, beef and veal, and pork are estimated to decrease.

The findings indicate that, consistent with standard economic theory, directly affected industries recover the higher costs imposed by the rule through slightly higher prices for their products. With higher prices, the quantities of their products demanded also decline. Consumers pay slightly more for the

products and purchase less of the covered commodities. Overall, the model indicates that the net loss to society, or ''deadweight'' burden of the rule, is considerably smaller than the incremental opportunity costs to directly affected firms that were imposed on the model. The remainder of this section describes in greater detail how the estimated direct, incremental costs and the overall costs to the United States economy are developed.

Cost assumptions: This rule directly regulates the activities of retailers (as defined by the law) and their suppliers. Retailers are required by the rule to provide country of origin information for the covered commodities that they sell, and firms that supply covered commodities to these retailers must provide them with this information. In addition, virtually all other firms in the supply chain for the covered commodities are potentially affected by the rule because country of origin information will need to be maintained and transferred along the entire supply chain.

Number of firms and number of establishments affected: This rule is estimated to directly or indirectly affect approximately 1,333,000 establishments owned by approximately 1,299,000 firms. Table 1 provides estimates of the affected firms and establishments.

TABLE 1—ESTIMATED NUMBER OF AFFECTED ENTITIES

Type	Firms	Establishments
Beef, Lamb, Pork, and Goat		
Cattle and Calves	971,400	971,400
Sheep and Lambs	69,090	69,090
Hogs and Pigs	65,540	65,540
Goats	9,146	9,146
Stockyards, Dealers & Market Agencies	6,807	6,807
Livestock Processing & Slaughtering	2,943	3,207
Meat & Product Wholesale	2,509	2,706
Chicken		
Chicken Producer and Processor	38	168
Chicken Wholesaler/Distributor	510	564
Fish		
Farm-Raised Fish and Shellfish	3,752	3,752
Fishing	71,128	71,142
Fresh & Frozen Seafood Processing	516	590
Fish & Seafood Wholesale	2,254	2,330
Perishable Agricultural Commodities		
Fruits & Vegetables	79,800	79,800
Ginseng Farms	190	190
Ginseng Dealers	46	46
Frozen fruit, juice & vegetable mfg	155	247
Fresh fruit & vegetable wholesale	4,654	5,016
Peanuts, Pecans, & Macadamia Nuts		
Peanut Farming	650	650
Macadamia Farming	53	53
Pecan Farming	1,119	1,119
Roasted nuts & peanut butter mfg	8	9
Peanut, Pecan, & Macadamia Wholesalers	5	5
General line grocery wholesalers	3,037	3,436
Retailers	4,040	36,392
Totals:		
Producers	1,271,906	1,272,050
Handlers, Processors, & Wholesalers	23,444	24,963
Retailers	4,040	36,392
Grand Total	1,299,390	1,333,405

It is assumed that all firms and establishments identified in Table 1 will be affected by the rule, although some may not produce or sell products ultimately within the scope of the rule. While this assumption likely overstates the number of affected firms and establishments, it is believed that the assumption is reasonable. Detailed data are not available on the number of entities categorized by the marketing channels in which they operate and the specific products that they sell.

Source of cost estimates: To develop estimates of the cost of implementing this rule, comments on the interim final rule for beef, pork, lamb, chicken, goat meat, perishable agricultural commodities, peanuts, pecans, ginseng, and macadamia nuts as well as the interim final rule for fish and shellfish were reviewed and available economic studies were also examined. No single source of information, however, provided comprehensive coverage of all economic benefits and costs associated with mandatory COOL for all of the covered commodities. Available information and knowledge about the operation of the supply chains for the covered commodities were used to synthesize the findings of the available studies about the rule's potential costs.

Cost drivers: This rule is a retail labeling requirement. Retail stores subject to this rule will be required to inform consumers as to the country of origin of the covered commodities that they sell. To accomplish this task, individual package labels or other point-of-sale materials will be required. If products are not already labeled by suppliers, the retailer will be responsible for labeling the items or providing the country of origin and, as applicable, method of production information through other point-of-sale

materials. This may require additional retail labor and personnel training. Modification of existing recordkeeping systems will likely be required to ensure that products are labeled accurately and to permit compliance and enforcement reviews. For most retail firms of the size defined by the statute (i.e., those retailing fresh and frozen fruits and vegetables with an invoice value of at least $230,000 annually), it is assumed that recordkeeping will be accomplished primarily by electronic means. Modifications to recordkeeping systems will require software programming and may entail additional computer hardware. Retail stores are also expected to undertake efforts to ensure that their operations are in compliance with the rule.

Prior to reaching retailers, most covered commodities move through distribution centers or warehouses. Direct store deliveries (such as when a local truck farmer delivers fresh produce directly to a retail store) are an exception. Distribution centers will be required to provide retailers with country of origin and, as applicable, method of production information. This likely will require modification of existing recordkeeping processes to ensure that the information passed from suppliers to retail stores permits accurate product labeling and permits compliance and enforcement reviews. Additional labor and training may be required to accommodate new processes and procedures needed to maintain the flow of country of origin and, as applicable, method of production information through the distribution system. There may be a need to further separate products within the warehouse, add storage slots, and alter product stocking, sorting, and picking procedures.

Packers and processors of covered commodities will also need to inform retailers and wholesalers as to the country of origin and, as applicable, method of production (wild and/or farm-raised) of the products that they sell. To do so, their suppliers will need to provide documentation regarding the country of origin and, as applicable, method of production of the products that they sell. The efficiency of operations may be affected as products move through the receiving, storage, processing, and shipping operations. For packers and processors handling products from multiple origins and/or methods of production, there may also be a need to separate shifts for processing products from different origins, or to split processing within shifts, or to alter labels to correctly identify the country or countries of origin and method or methods of production, as applicable. However, in the case of meat covered commodities, there is flexibility in labeling covered commodities of multiple origins under this final rule. In the case where products of different origins are segregated, our analysis indicates costs are likely to increase. The rule requires that records be maintained to ensure that accurate country of origin information is retained throughout the process and available to permit compliance and enforcement reviews.

Processors handling only domestic origin products or products from a single country of origin may have lower implementation costs compared with processors handling products from multiple origins, although such costs would likely be mitigated in those cases where firms are only using covered commodities which are multiple-origin labeled. Procurement costs also may be unaffected in this case, if the processor is able to continue sourcing products from the same suppliers. Alternatively it is possible that a processor currently sourcing products from multiple countries may choose to limit its source to fewer countries. In this case, such cost avoidance may be partially offset by additional procurement costs to source supplies from a narrower country of origin. Additional procurement costs of a narrower supply chain may include higher transportation costs due to longer shipping distances and higher acquisition costs due to supply and demand conditions for products from a particular country of origin, whether domestic or foreign.

At the production level, agricultural producers and fish and shellfish harvesters need to maintain records to establish country of origin and, as applicable, method of production information for the products they produce and sell. Country of origin and, as applicable, method of production information will need to be transferred to the first handler of their products, and records sufficient to allow the source of the product to be traced back will need to be maintained as the products move through the supply chains. For all covered commodities, producer affidavits shall be considered acceptable records on which suppliers may rely to initiate country of origin and, as applicable, method of production claims. In general, additional producer costs include the cost of modifying and maintaining a recordkeeping system for country of origin information, animal or product identification, and labor and training.

Incremental cost impacts on affected entities: To estimate the direct costs of this rule, the focus is on those units of production that are affected (Table 2).

TABLE 2—ESTIMATED ANNUAL UNITS OF PRODUCTION AFFECTED BY MANDATORY COUNTRY OF ORIGIN LABELING

	Beef	Pork	Lamb and goat	Chicken	Fish	Fruit, vegetable, and ginseng	Peanuts, pecans, and macadamia nuts
	Million head			Million pounds			
Producer	33.9	104.8	2.9	45,012.9	7,808.0	120,388.5	212.7
	Million pounds						
Intermediary	24,890	6,721	354	27,710	3,024	99,449	11
Retailer	8,193	2,330	133	17,645	1,104	47,078	5

For livestock, the relevant unit of production is an animal because there will be costs associated with maintaining country of origin information on each animal. These costs may include recordkeeping, ear tagging, and other related means of identification on either an individual animal or lot basis. Annual domestic slaughter numbers are used to estimate the flow of animals through the live

animal production segment of the supply chain.

For fish and chicken producers, production is measured by round weight (live weight) pounds, except mollusks, which excludes the weight of the shell. Wild caught fish and shellfish production is measured by United States domestic landings for fresh and frozen human food. It is assumed that fish harvesters generally know whether their catch is destined for fresh and frozen markets, canning, or industrial use. Fish production also includes farm-raised fish. Fish production has been updated with 2006 data from the regulatory analysis contained in the interim final rule for fish and shellfish.

For fruits and vegetables, it is assumed that essentially all production is predestined for either fresh or processing use. That is, growers know before the crop is produced whether it will be sold for fresh consumption or for processing. However, producers do not know whether their products ultimately will be sold to retailers, foodservice firms, or exporters. Therefore, it is assumed that all fresh fruit and vegetable production and production destined for frozen processors at the producer level will be affected by this rule. Ginseng production has been included with the fruit and vegetable production.

As previously discussed, only green and raw peanuts, macadamia nuts, and pecans sold at retail are subject to the requirements of this rule. Green and raw peanuts are specialty items typically sold at roadside stands, through mail order, and at specialty shops. These items frequently are not carried by many of the retailers subject to this rule. Statistics on the size of this niche market are not readily available. It is assumed that no more than 5 percent of the sales of peanuts at subject retailers are sold as green or raw peanuts. Macadamia nuts and pecans have been included with peanuts.

It is assumed that all sales by intermediaries such as handlers, packers, processors, wholesalers, and importers will be affected by the rule. Although some product is destined exclusively for foodservice or other channels of distribution not subject to the rule, it is assumed that these intermediaries will seek to keep their marketing options open for possible sales to subject retailers.

Fish production at the intermediary level is increased by 505 million pounds from the RIA estimate of 2004 in the interim final rule for fish and shellfish due to more recently available data.

Information and data on ginseng is limited. However, the Wisconsin Department of Agriculture reports the number of growers at 190, the number of dealers at 46, and grower sales at 282,055 dry root pounds for 2006 (Ref. 5). While some other regions in the country likely produce ginseng, information could not be found and it is believed that Wisconsin is the largest producing state. The information from Wisconsin likely underestimates the total number of farms, dealers, and production of ginseng. However, it is believed that Wisconsin represents most of the ginseng production and therefore, this information is used for this rule. Since the number of entities and production are likely underestimated and the production is relatively small as compared to other covered commodities, the production was not adjusted for retail consumption.

The Census of Agriculture provides an estimate of the number of macadamia nut farming operations. The total number of macadamia farms is estimated at 1,059 [Ref. 6]. Businesses that husk and crack macadamia nuts are unofficially estimated by the Hawaii Field Office of the National Agricultural Statistical Service (NASS) at 8 firms and establishments. Businesses that wholesale macadamia nuts are estimated by the Hawaii Department of Agriculture at 21 firms and establishments. Similar to peanuts, the rule exempts most product forms of macadamia nuts sold at retail. While data on macadamia nuts sold at retail that are covered by this rule are not available, the volume of sales is certainly very small. For purposes of estimation, the number of affected entities at each level of the macadamia nut sector has been reduced to 5 percent of the total estimated. The number of farms has been reduced from 1059 to 53 and the number of wholesalers has been reduced from 21 to 1.

The Census of Agriculture provides an estimate of 22,371 pecan farming operations [Ref. 7]. Similar to peanuts and macadamia nuts, the rule exempts most product forms of pecans sold at retail. For purposes of estimation, the number of affected entities at each level of the pecan sector has been reduced to 5 percent of the total 22,371 to 1,119 farms.

As with peanut, macadamia nut, and pecan production at the producer level, peanut, macadamia nut, and pecan production at the intermediary level is also reduced by 95 percent. The estimate of peanut, macadamia nut, and pecan production is intended to include only green and raw peanuts, macadamia nuts, and pecans.

For retailers, food disappearance figures are adjusted to estimate consumption through retailers as defined by the statute. For each covered commodity, disappearance figures are multiplied by 0.470, which represents the estimated share of production sold through retailers covered by this rule. To derive this share, the factor of 0.622 is used to remove the 37.8 percent food service quantity share of total food in 2006 (Ref. 8). This factor is then multiplied by 0.756, which was the share of sales by supermarkets, warehouse clubs and superstores of food for home consumption in 2006 (Ref. 9). In other words, supermarkets, warehouse clubs and superstores represent the retailers as defined by PACA, and these retailers are estimated to account for 75.6 percent of retail sales of the covered commodities.

Table 3 summarizes the direct, incremental costs that firms will incur during the first year as a result of this rule. These estimates are derived primarily from the available studies that addressed cost impacts of mandatory COOL.

TABLE 3—ESTIMATES OF FIRST-YEAR IMPLEMENTATION COSTS PER AFFECTED INDUSTRY SEGMENT

[Million dollars]

	Beef	Pork	Lamb & goat	Chicken	Fish	Fruit, vegetable, and ginseng	Peanuts, pecans, & macadamia nuts	Total
Producer	305	105	10	0	20	30	0	470
Intermediary	373	101	5	139	15	497	0	1,130
Retailer	574	93	5	44	77	235	0	1,029
Total	1,252	299	21	183	112	763	0	2,629

Assumptions and procedures underlying the cost estimates are described fully in the discussion of the estimates presented in the PRIA and the IRIA.

Considering all producer segments together, we have estimated a $9 per head cost to cattle producers to implement the rule. This estimate reflects the expectation of relatively small implementation costs at the cow-calf level of production, but relatively higher costs each time cattle are resold. Typically, fed steers and heifers change hands two, three, or more times from birth to slaughter, and each exchange will require the transfer of country of origin information. Thus, total costs for beef producers are estimated at $305 million.

It is expected that intermediaries will face increased costs associated with tracking cattle and the covered beef commodities produced from these animals and then providing this information to subsequent purchasers, which may be other intermediaries or covered retailers. Incremental costs for beef packers may include additional capital and labor expenditures to enable cattle from different origins to be tracked for slaughter, fabrication, and processing. As previously discussed, under this final rule, there is greater flexibility for labeling muscle cut covered commodities. In addition, the rule also provides for flexibility in labeling ground products by allowing the notice of country of origin to include a list of countries contained therein or that may reasonably be contained therein. Considering the costs likely to be faced by intermediaries in the beef sector, $0.015 per pound is adopted as an estimate of costs, which is consistent with estimates from the available studies. Total costs are thus estimated at $373 million.

The implementation costs are estimated at $0.07 per pound for beef retailers, for a total of $574 million. This figure reflects the costs for individual package labels, meat case segmentation, record keeping and information technology changes, labor, training, and auditing. In addition, there likely will be increased costs for in-store butcher department operations related to cutting, repackaging, and grinding operations.

Total costs for affected entities in the beef sector are thus estimated at $1,252 million.

Costs for pork producers are estimated at $1.00 per head. With annual slaughter of 104.8 million head, total costs for producers are estimated at $105 million.

Costs for all pork sector intermediaries (including handlers, processors, and wholesalers) should be similar to costs for beef sector intermediaries. These estimated costs for pork industry intermediaries are $0.015 per pound, for a total of $101 million.

Costs for retailers of pork are estimated to be $0.04 per pound. The per-pound cost estimate for pork is lower than for beef primarily to reflect the higher costs incurred by in-store grinding operations to produce ground beef. Although ground pork may also be produced in-store, most ground pork is processed into sausage and other products not covered by the rule. Total estimated costs for pork retailers are $93 million. Total costs for the pork sector are estimated at $299 million.

Costs per head for lamb and goat producers are estimated at $3.50 per head. Total costs for lamb and goat producers are estimated at $10 million.

Intermediaries in the lamb and goat sector will likely face per-pound costs similar to costs faced by beef and pork sector intermediaries, which are estimated at $0.015 per pound. Total costs for lamb and goat sector intermediaries are thus estimated at $5 million.

Costs to retailers for lamb and goat should be similar to costs borne for pork, which was estimated at $0.04 per pound. Total costs for retailers of lamb and goat are estimated at $5 million.

Total costs for producers, intermediaries, and retailers in the lamb and goat industries are estimated costs at $21 million.

Costs for chicken producers who grow-out chicken for an integrator (the firm that will slaughter and possibly further process the chickens) is $0.00 because these individuals do not own or control the movement of the chickens they are raising. All chickens produced are owned by the integrator which is the main intermediary in the chicken supply chain. We do not expect that producers will need change any current practices and thus will not incur any additional costs due to this rule.

Costs for the intermediaries in the chicken supply chain are estimated to be $0.005 per pound. Since the integrators own their chickens from the time they hatch to time they are sold to a retailer or distributor, there is no need to ''collect'' country of origin information. Costs to the integrator are mainly due to system changes to incorporate COOL information, recordkeeping, and supplying required information to the retailers and food distributors. Approximately 69 percent of chicken covered by COOL is supplied directly to the retailer from the integrator. The vast majority, if not all, of the chicken supplied by the integrator is pre-labeled. The bulk of the rest is supplied by the distributors whose costs will be slightly higher since they are receiving product from integrators and selling product to retailers. Total costs for intermediaries are estimated at $139 million.

Costs for retailers are estimated to be $0.0025 per pound. As noted above most chicken is purchased directly from integrators and will have been pre-labeled. This will significantly lower the retailers' cost in terms of meeting COOL requirements. Most of the costs retailers will bear will be from distributors. Total cost for retailers are estimated at $44 million.

Total estimated costs for chicken producers, intermediaries, and retailers are $183 million.

The estimated costs to fish and seafood producers are $0.0025 per pound. Total costs for fish and seafood producers are thus estimated at $20 million, $1 million more than the RIA in the interim final rule for fish and shellfish.

Costs for intermediaries are estimated at $0.005 per pound in the fish and seafood sector. Processors need to collect country of origin and method of production information from producers, maintain this information, and supply this information to other intermediaries or directly to retailers. There are also labeling costs associated with providing country of origin and method of production information on consumer-ready packs of frozen and fresh fish that are labeled by processors. Total costs for fish and seafood intermediaries are thus estimated at $15 million, an increase of $2 million from the RIA in the interim final rule for fish and shellfish. The increase is attributable to using the most recently available data, which reflects a higher demand for fresh fish and shellfish.

Retailer costs are estimated at $0.07 per pound for fish and seafood. This estimate results in total costs of $77 million for retailers of fish and seafood, an increase of $20 million from the RIA in the interim final rule for fish and shellfish.

Total costs for fish and seafood are estimated at $112 million, an increase of $23 million from the RIA in the interim final rule for fish and shellfish.

Although fruit, vegetable, and ginseng producers maintain the types of records that will be required to substantiate origin claims, it is believed that this information is not universally transferred by producers to purchasers of their products. Producers will have to supply this type of information in a format that allows handlers and

processors to maintain country of origin information so that it can be accurately transferred to retailers. For fruit, vegetable, and ginseng producers, costs are estimated at $0.00025 per pound to make and substantiate COOL claims, which equates to $0.01 for a 40 pound container. Because fruits and vegetables only have a single point of origin, which is where they are grown, substantiating country of origin claims is substantially simpler for fruit and vegetable producers than for livestock producers. Total costs for fruit, vegetable, and ginseng producers are estimated at $30 million.

Fruit, vegetable, and ginseng intermediaries will shoulder a sizeable portion of the burden of tracking and substantiating country of origin information. Intermediaries will need to obtain information to substantiate COOL claims by producers and suppliers; maintain COOL identity throughout handling, processing, and distribution; and supply retailers with COOL information through product labels and records. The estimated cost for these activities for fruit and vegetable sector intermediaries is $0.005 per pound, resulting in total estimated costs of $497 million.

Because intermediaries will bear a large portion of the burden of COOL tracking and labeling, implementation costs for retailers will be reduced. It is believed that virtually all frozen fruits and vegetables will be labeled by suppliers, thus imposing minimal incremental costs for retailers. In addition, over 60 percent of fresh fruits and vegetables arrive at retail with labels or stickers that may be used to provide COOL information. It is believed that fresh fruit and vegetable suppliers will provide COOL information on these labels and stickers, again imposing minimal incremental costs for retailers. Costs for retailers are estimated at $0.005 per pound of fresh and frozen fruits and vegetables. For pre-labeled products, the label itself is sufficient evidence on which the retailer may rely to establish a product's country of origin. For these pre-labeled products, the product label or sticker carries the required country of origin information, while the recordkeeping system maintains the information necessary to track the product back through the supply chain. Total costs for retailers of fruits, vegetables, and ginseng are estimated at $235 million.

Total costs for producers, intermediaries, and retailers of fruit, vegetable, and ginseng products are estimated at $763 million.

Costs per pound for each segment of the peanut, macadamia nut, and pecan industries is estimated at $0.00025 for producers, $0.005 for intermediaries and $0.015 for retailers. As a result, costs for the peanut, macadamia nut, and pecan industries are estimated at about $400,000, with negligible costs for producers and costs of less than $200,000 at the intermediary and retailer levels.

Total incremental costs are estimated for this rule at $470 million for producers, $1,130 million for intermediaries and $1,029 million for retailers for the first year. Total incremental costs for all supply chain participants are estimated at $2,629 million for the first year, an increase of $112 million from the IRIA due to the inclusion of and updating of data for the fish and shellfish industries.

There are wide differences in average estimated implementation costs for individual entities in different segments of the supply chain (Table 4). With the exception of a small number of fishing operations and chicken producers, producer operations are single-establishment firms. Thus, average estimated costs per firm and per establishment are somewhat similar. Retailers subject to the rule operate an average of just over nine establishments per firm. As a result, average estimated costs per retail firm also are just over nine times larger than average costs per establishment.

TABLE 4—ESTIMATED IMPLEMENTATION COSTS PER FIRM AND ESTABLISHMENT

	Cost estimates per	
	Firm	Establishment
Producer	$370	$369
Intermediary	48,219	45,285
Retailer	254,685	28,273

Average estimated implementation costs per producer are relatively small at $370 and slightly less than from the IRIA due to the inclusion of fish and shellfish producers. The slight difference between the cost per producers for firms and establishments is due to the inclusion of fish and shellfish and that there are more fishing establishments than firms. Estimated costs for intermediaries are substantially larger, averaging $48,219 per firm and $45,285 per establishment. The average cost per firm is $5,729 less than the IRIA estimated cost, with the lower cost attributable to the inclusion of fish and shellfish. Similarly, the average cost per intermediary establishment is $5,313 lower than IRIA estimate due to the inclusion of fish and shellfish. At an average of $254,685 per firm, retailers have the highest average estimated costs per firm. This is $19,134 higher than the IRIA estimate. The higher estimated cost per retailer is attributable to the inclusion of fish and shellfish. Retailers' average estimated costs per establishment are $28,273. This amount is $2,124 higher than the IRIA estimate.

The costs per firm and per establishment represent industry averages for aggregated segments of the supply chain. Large firms and establishments likely will incur higher costs relative to small operations due to the volume of commodities that they handle and the increased complexity of their operations. In addition, different types of businesses within each segment are likely to face different costs. Thus, the range of costs incurred by individual businesses within each segment is expected to be large, with some firms incurring only a fraction of the average costs and other firms incurring costs many times larger than the average.

Average costs per producer operation can be calculated according to the commodities that they produce (Table 5). Average estimated costs are lowest for lamb and goat producers ($128) and highest for hog operations ($1,599). Again, chicken ''producers'' do not own or control the movement of the birds they are growing-out. We do not expect that the rule will result in any changes in their current production practices, and thus their average cost is zero. Because average production volume per hog operation is large relative to other types of producer

TABLE 5—ESTIMATED FIRST-YEAR IMPLEMENTATION COSTS PER PRODUCER OPERATION

Producer	Average
Beef	$314
Lamb & Goats	128
Pork	1,599
Chicken	0
Fish	261
Fruits, Vegetables, & Ginseng	376
Peanuts, Pecans, & Macadamia Nuts	258
All	369

operations, estimated costs per hog operation are large relative to other producer operations. These costs are unchanged from the IRIA estimates except for fish which used more up-to-date information.

It is believed that the major cost drivers for the rule occur when livestock or other covered commodities are transferred from one firm to another, when livestock or other covered commodities are segregated in the production or marketing process when firms are not using a multiple-origin label, and when products are assembled and then redistributed to retail stores. In part, some requirements of the rule will be accomplished by firms using essentially the same processes and practices as are currently used, but with information on country of origin claims added to the processes. This adaptation generally would require relatively small marginal costs for recordkeeping and identification systems. In other cases, however, firms may need to revamp current operating processes to implement the rule. For example, a processing or packing plant may need to sort incoming products by country of origin and, if applicable, method of production, in addition to weight, grade, color, or other quality factors. This may require adjustments to plant operations, line processing, product handling, and storage. Ultimately, it is anticipated that a mix of solutions will be implemented by industry participants to effectively meet the requirements of the rule. Therefore, it is anticipated that direct, incremental costs for the rule likely will fall within a reasonable range of the estimated total of $2.6 billion.

In the IRIA, one regulatory alternative considered by AMS would be to narrow the definition of a processed food item, thereby increasing the scope of commodities covered by the rule. This alternative is not adopted in this final rule. An increase in the number of commodities that would require COOL would increase implementation costs of the rule with little expected economic benefit. Additional labeling requirements may also slow some of the innovation that is occurring with various types of value-added, further processed products.

A different regulatory alternative would be to broaden the definition of a processed food item, thereby decreasing the scope of commodities covered by the rule. Accordingly, such an alternative would decrease implementation costs for the rule. At the retail level and to a lesser extent at the intermediary level, cost reductions would be at least partly proportional to the reduction in the volume of production requiring retail labeling, although if the broader definition excluded products for which incremental costs are relatively high, the impact could be more than proportional. Start-up costs for retailers and many intermediaries likely would be little changed by a narrowing of the scope of commodities requiring labeling because firms would still need to modify their recordkeeping, production, warehousing, distribution, and sales systems to accommodate the requirements of the rule for those commodities that would require labeling. Ongoing maintenance and operational costs, however, likely would decrease in some proportion to a decrease in the number of items covered by the rule. On the other hand, implementation costs for the vast majority of agricultural producers would not be affected by a change in the definition of a processed food item. This is because it is assumed that virtually all affected producers would seek to retain the option of selling their products through supply channels for retailers subject to the rule. Agricultural producers generally would have little influence on the ultimate product form in which their products are sold at retail, and thus would be little affected by changes in the definition of a processed food item.

The definition of a processed food item developed for this rule has taken into account comments from affected entities and has resulted in excluding products that would be more costly and troublesome for retailers and suppliers to provide country of origin information.

Net Effects on the economy: The previous section estimated the direct, incremental costs of the rule to the affected firms in the supply chains for the covered commodities. While these costs are important to those directly involved in the production, distribution, and marketing of covered commodities, they do not represent net costs to the United States economy or net costs to the affected entities for that matter.

With respect to assessing the effect of this rule on the economy as a whole, it is important to understand that a significant portion of the costs directly incurred by the affected entities take the form of expenditures for additional production inputs, such as payments to others whether for increased hours worked or for products and services provided. As such, these direct, incremental costs to affected entities represent opportunity costs of the rule, but they do not represent losses to the economy. As a result, the direct costs incurred by the participants in the supply chains for the covered commodities do not measure the net impact of this rule on the economy as a whole. Instead, the relevant measure is the extent to which the rule reduces the amount of goods and services that can be produced throughout the United States economy from the available supply of inputs and resources.

Even from the perspective of the directly affected entities, the direct, incremental costs do not present the whole picture. Initially, the affected entities will have to incur the operation adjustments and expenses necessary to implement the rule. However, over time as the economy adjusts to the requirements of the rule, the burden facing suppliers will be reduced as their production level and the prices they receive change. What is critical in assessing the net effect of this rule on the affected entities over the longer run is to determine the extent to which the entities are able to pass these costs on to others and consequently how the demand for their commodities is affected.

Conceptually, suppose that all the increases in costs from the rule were passed on to consumers in the form of higher prices and that consumers continued to purchase the same quantity of the affected commodities from the same marketing channels. Under these conditions, the suppliers of these commodities would not suffer any net loss from the rule even if the increases in their operating costs were quite substantial. However, other industries might face losses as consumers may spend less on other commodities. It is unlikely, however, absent the rule leading to changes in consumers' preferences for the covered commodities that consumers will maintain their consumption of the covered commodities in the face of increased prices. Rather, many or most consumers will likely reduce their consumption of the covered commodities. The resulting changes in consumption patterns will in turn lead to changes in production patterns and

the allocation of inputs and resources throughout the economy. The net result, once all these changes have occurred, is that the total amount of goods and services produced by the United States economy will be less than before.

To analyze the effect of the changes resulting from the rule on the total amount of goods and services produced throughout the United States economy in a global context, a computable general equilibrium (CGE) model developed by Economic Research Service (ERS) is utilized (Ref. 4). The ERS CGE model includes all the covered commodities and the products from which they are derived, as well as non-covered commodities that will be indirectly affected by the rule, such as feed grains. Even though COOL for fish was implemented in 2004, the costs for fish and shellfish are included to account for the cross-commodity effects between covered commodities. Peanuts, however, are aggregated with oilseeds in the model, and there is no meaningful way to modify the model to account for the impacts of the rule on peanut production, processing, and consumption. Given the definition of a processed food item, almost all peanut products are exempt from this rule. As a consequence, the peanut sector accounts for only a negligible fraction of the total estimated incremental costs for all directly affected entities. Thus, omitting the small direct costs on the peanut sector is expected to have negligible impacts with respect to estimated impacts on the overall United States economy.

The ERS CGE model traces the impacts from an economic ''shock,'' in this case an incremental increase in costs of production, through the U.S agricultural sector and the U.S economy to the rest of the world and back through the inter-linking of economic sectors. By taking into account the linkages among the various sectors of the United States and world economies, a comprehensive assessment can be made of the economic impact on the United States economy of the rule implementing COOL. The model reports economic changes resulting after a ten-year period of adjustment.

The results of this analysis indicate that the rule implementing COOL after the economy has had a period of ten years to adjust will have a smaller net impact on the overall United States economy than the incremental costs for directly affected entities for the first year. Under the assumption that COOL will not change consumers' preferences for the covered commodities, it is estimated that the overall costs to the United States economy due to the rule, in terms of a reduction in consumers' purchasing power, will be $211.9 million. This represents the cost to the United States economy after all transfers and adjustments in consumption and production patterns have occurred.

As noted above, the overall net costs to the United States economy after a decade of adjustment are significantly smaller than the implementation costs to directly affected firms. This result does not imply that the implementation costs for directly affected firms have been substantially reduced from the initial estimates. While some of the increase in their costs will be offset by reduced production and higher prices over the longer term, the suppliers of the covered commodities will still bear direct implementation costs.

The estimates of the overall costs to the United States economy are based on the estimates of the incremental increases in operating costs to the affected firms. The model does not permit supply channels for covered commodities that require country of origin information to be separated from supply channels for the same commodities that do not require COOL. Thus, the direct cost impacts must be adjusted to accurately reflect changes in operating costs for all firms supplying covered commodities. Table 6 reports these adjusted estimates in terms of their percentage of total operating costs for each of the directly affected sectors. The percentages used are based on the estimate of the percentage change in operating costs for the entire supply channel and are adjusted between the various segments of each covered commodity's'' supply chain (producers, processors, importers, and retailers) based on the estimate of how the costs of the regulation will be distributed among them. As a result, the cost changes shown in Table 6 only approximate the direct cost estimates previously described.

TABLE 6—ESTIMATED INCREASES IN OPERATING COSTS BY SUPPLY CHAIN SEGMENT AND INDUSTRY

		Beef, Lamb, & Goat	Pork	Chicken	Fish	Fresh produce
		Percent change				
Farm Supply	Domestic	1.30	1.30	0.00	0.60	0.10
	Imported	1.30	1.30	1.00	0.60	0.10
Processing	Domestic	2.10	1.00	1.10	n.a.	n.a.
	Imported	2.10	1.00	1.10	n.a.	n.a.
Retail	Domestic	2.20	0.40	0.60	0.40	0.60
	Imported	2.20	0.40	0.60	0.40	0.60

n.a.—Not Applicable.

In addition, it is assumed that domestic and foreign suppliers of the covered commodities located at the same level or segment of the supply chain face the same percentage increases in their operating costs. In reality, the incremental costs for some imported covered commodities may be lower, as a portion of those products already enter the United States with country of origin labels.

As discussed above, consumption and production patterns will change as the incremental increases in operating costs are passed on, at least partially, to consumers in the form of higher prices by the affected firms. The increases in the prices of the covered commodities will in turn cause exports and domestic consumption and ultimately domestic production to fall. The results of our analysis indicate that United States production of all the covered commodities combined will decline 0.02 percent and that the overall price level for these commodities (a weighted average index of the prices received by suppliers for their commodities) will increase by 0.02 percent.

The structure of the model does not enable changes in net revenues to suppliers of the covered commodities to be determined. Likewise, the model cannot be used to determine the extent to which the reductions in production

arise from some firms going out of business or all firms cutting back on their production. To provide an indication of what effect this will have on the suppliers of the covered commodities, changes in revenues using the model results are estimated. The result of this calculation shows that revenues to suppliers of the covered commodities will decrease by $461 million. This decrease in revenue is due to the decrease in estimated revenues in all covered commodities; all affected sectors show a small revenue decrease due to the increased costs of the rule.

The costs of the rule will not be shared equally by all suppliers of the covered commodities. The distribution of the costs of the rule will be determined by several factors in addition to the direct costs of complying with the rule. These are the availability of substitute products not covered by the rule and the relative competitiveness of the affected suppliers with respect to other sectors of the United States and world economies.

Although the increases in operating costs are the initial drivers behind the changes in consumption and production patterns resulting from this rule, they do not, as can be seen by examining Table 7, determine which commodity sector will be most affected. Table 7 contains the percentage changes in prices, production, exports, and imports for the three main segments of the marketing chain by covered commodities. The estimated increases in operating costs reflect anticipated adjustments by industry as a result of the rule and provide the basis for the CGE analysis. However, the analysis does not reflect dynamic adjustments that industry will undertake to comply with the requirements of the rule, such as the flexibilities afforded by the use of multiple-origin labels.

TABLE 7—ESTIMATED IMPACT OF RULE ON U.S. PRODUCTION, PRICES AND TRADE OF IMPACTED SECTORS

Commodity	Price	Production	Exports (volume)	Imports (volume)
	Percent change from base year			
Fruits and Vegetables	0.21	−0.20	−0.39	0.04
Cattle and Sheep	0.52	−0.94	−1.18	0.25
Broilers	0.03	−0.57	−0.36	−0.03
Hogs	0.26	−0.46	−0.60	0.16
Beef and Veal	0.99	−1.09	−1.93	−2.32
Chicken	0.82	−0.90	−1.54	0.29
Pork	0.68	−0.81	−1.37	−0.86
Fish	0.50	−0.68	−0.06	0.04

As mentioned previously, peanuts, macadamia nuts, and pecans are included with oilseed products in the ERS CGE model. As a result they are not included in this analysis.

The rule increases operating costs for the supply chains of the covered commodities. As shown in Table 7, the increased costs result in higher prices for these products. The quantity demanded at these higher prices falls, with the result that the production of all of the covered commodities decreases.

Imports of fruits, vegetables, cattle, sheep, chicken, fish, and hogs increase because the model assumes United States domestic suppliers of these products respond more to changes in their operating costs than do foreign suppliers. The resulting gap between the supply response of United States and foreign producers provides foreign suppliers with a cost advantage in United States markets that enables them to increase their exports to the United States even though they face similar increases in operating costs.

To put these impacts in more meaningful terms, the percentage changes reported in Table 7 were converted into changes in current prices and quantities produced, imported, and exported (Table 8). The base values in Table 8 vary from those reported in Table 2 above because they are derived from projected levels reported in the USDA Agricultural Baseline for 2006 (Ref. 10), while values in Table 2 represent actual reported values for 2006 as compiled by USDA's NASS. Baseline values were used to accommodate the structure of the model.

Increases in prices for all covered commodities are small, less than one cent per pound. Production changes are similarly small, less than 100 million pounds for all covered commodities. The declines in the production of beef, chicken, and pork mirrors the decline in the production of beef, broilers, and hogs.

TABLE 8—ESTIMATED CHANGES IN U.S. PRODUCTION PRICES, AND TRADE FOR AFFECTED COMMODITIES

Indicator	Units	Base	Change from base
U.S. Production:			
Veg. & Fruits	Mil. Lbs. Thous	191,523	−383
Cattle	Hd	32,229	−303
Broilers	Mil. Hd	6,503	−36
Hogs	Thous. Hd	103,015	−474
Beef	Mil. Lbs	24,784	−270
Chicken	Mil. Lbs	35,733	−322
Pork	Mil. Lbs	20,706	−168
Fish	Mil. Lbs	7,997	−54
U.S. Price:			
Veg. & Fruits	$/Lb	0.25	0.0005
Cattle and sheep	$/Cwt	89.55	0.4657
Broilers	$/Lb	0.43	0.0001

TABLE 8—ESTIMATED CHANGES IN U.S. PRODUCTION PRICES, AND TRADE FOR AFFECTED COMMODITIES—Continued

Indicator	Units	Base	Change from base
Hogs	$/Cwt	49.62	0.1290
Beef and veal	$/Lb	4.09	0.0405
Chicken	$/Lb	1.74	0.0143
Pork	$/Lb	2.83	0.0192
Fish	$/Lb	0.93	0.0047
U.S. Exports (volume):			
Fruits & Vegetables	Mil Lbs	19,990	−78
Beef	Mil Lbs	697	−13
Chicken	Mil Lbs	5,203	−80
Pork	Mil Lbs	2,498	−34
Fish	Mil Lbs	6,384	−4
U.S. Imports (volume):			
Fruits & Vegetables	Mil. Lbs. Thous	37,573	15
Beef	Hd	2,502	−58
Chicken	Mil. Hd. Thous	0	0
Pork	Hd	5,741	−49
Fish	Mil. Lbs	10,158	4

SOURCES: Base values for meat and fruits and vegetables come from USDA Agricultural Baseline Projections to 2016, Staff Report WAOB–2007–1. USDA, Office of the Chief Economist, 2007. Changes are derived from applying percentage changes obtained from the ERS CGE model to the base values. [a] Live animal estimates derived from baseline values for meat product using 2005 average dress weight for cattle, hogs and broilers. [b] Base values for fish come from Fisheries of the United States, 2005. National Marine Fisheries Service, National Oceanic and Atmospheric Administration, U.S. Department of Commerce, 2006. [c] Fruit and vegetable price derived by dividing the total value of fruit and vegetable production by total quantity of fruit and vegetables produced as reported in USDA baseline for 2005. [d] Fish price derived by dividing total value of commercial and aquaculture production, excluding other, by total commercial and aquaculture production.

The estimated changes in prices and production cause revenues for the fruit and vegetable industry to increase an estimated $5 million. The small revenue increase in the fruit and vegetable industry is attributed to the fact that the price increase just offsets the production decrease. The estimated changes in production and prices result in revenues decreasing by $94 million for beef cattle producers while revenues from production and sale of beef decrease by an estimated $112 million dollars. Revenues for broiler production declines by $91 million and revenues for the production and sale of chicken decrease by $54 million. In addition, revenues for hog production decrease by $21 million and revenues from production and sale of pork decrease by $79 million. Finally, revenues to the fish industry fall by nearly $14 million.

The increase in the prices of all covered commodities causes exports to decline (Table 8). These declines are small; they are for the most part smaller than the declines in United States production of these commodities.

The ERS CGE model assumes that firms behave as though they have no influence on either their input or output prices. On the other hand, a model that assumed that processors could influence their input and output prices could find that prices received by agricultural producers decreased because processors passed their cost increases down to their suppliers rather than increase the price they charged their customers.

The estimates of the economic impact of the rule on the United States are based on the assumption that country of origin labeling does not shift consumer demand toward the covered commodities of United States origin. This assumption is based on the earlier finding that there was no compelling evidence to support the view that mandatory COOL will increase the demand for United States products. Despite this lack of evidence, it is examined how much of a shift or increase in demand for commodities of United States origin would need to occur to offset the costs imposed on the economy by the rule. Consumer demand for the covered commodities would have to increase 0.90 percent to offset the costs to the economy of COOL as outlined in the rule.

The hypothetical 0.90 percent increase in demand for covered commodities represents the overall increase (shift) in demand from all outlets. If there were such a demand increase for domestically produced covered commodities, however, it would presumably occur at those retailers required to provide country of origin information. As previously discussed, the percentage share of covered commodities sold by retailers subject to this rule is estimated at 47.0 percent of total consumption. This suggests that demand at covered retailers actually would have to increase by 1.9 percent for purposes of this hypothetical exercise, assuming no change in demand at other domestic outlets or in export demand.

As previously mentioned, the estimates of the overall economic effects of the rule are derived from a CGE model developed by ERS. The results from this model show the changes in production and consumption patterns after the economy has adjusted to the incremental increase in costs (medium run results). Such changes occur over time and the economy does not adjust instantaneously.

The results of this analysis describe and compare the old production and consumption patterns to the new ones, but do not reflect any particular adjustment process. The purpose of using the ERS CGE model is not to forecast what prices and production will be over any particular time frame, but to explore the implications of COOL on the United States economy and capture the direction of the changes.

The ERS CGE model is global in the sense that all regions in the world are covered. Production and consumption decisions in each region are determined within the model following behavior that is consistent with economic theory. Multilateral trade flows and prices are determined simultaneously by world market clearing conditions. This permits prices to adjust to ensure that total demand equals total supply for each commodity in the world.

The general equilibrium feature of the model means that all economic sectors—agricultural and non-agricultural—are included. Hence,

resources can move among sectors, thereby ensuring that adjustments in the feed grains and livestock sectors, for example, are consistent with adjustments in the processed sectors.

The model is static and this implies that possible gains (or losses) from stimulating (or inhibiting) investment and productivity growth are not captured. The model allows the existing resources to move among sectors, thereby capturing the effects of re-allocation of resources that are the result of policy changes. However, because the model fixes total available resources, it underestimates the long-run effects of policies on aggregate output. For example, the 10-year average real growth of GDP between 1997 and 2007 was approximately 3.1 percent (Ref. 11). If applied to the next 10 years this implies an economy approximately 36 percent larger at the end of this analysis than at the beginning of this analysis.

The ERS CGE model uses data from the Global Trade Analysis Project (GTAP database, version 7.2). The database represents the world as of 2004 and includes information on macroeconomic variables, production, consumption, trade, demand and supply elasticities, and policy measures. The GTAP database includes 57 commodities and 101 countries/regions. For this analysis, the regions were represented by the following country/regions: the United States, Canada, Mexico, the European Union-25 (EU), Oceania, China, Other East Asian Countries, India, Other South Asian Countries, Brazil, South America (including Central America), OPEC Countries, Russia, Africa and the Rest of the World. The agricultural sector is subdivided into the following 7 commodity aggregations: rice, wheat, corn, other feed grains (barley, sorghum), soybeans, sugar (cane and beets), vegetables and fresh fruits, other crops (cotton, peanuts), cattle and sheep, hogs and goats, poultry, and fish. The food processing sectors are subdivided into the following 6 commodity aggregations, bovine cattle and sheep meat, pork meat, chicken meat, vegetable oils and fats, other processed food products, beverages and tobacco, and fish. The remaining sectors in the database were represented by 18 aggregated non-agricultural sectors.

Regulatory Flexibility Analysis

This rule has been reviewed under the requirements of the Regulatory Flexibility Act (RFA) (5 U.S.C. 601 *et seq.*). The purpose of RFA is to consider the economic impact of a rule on small businesses and evaluate alternatives that would accomplish the objectives of the rule without unduly burdening small entities or erecting barriers that would restrict their ability to compete in the marketplace. The Agency believes that this rule will have a significant economic impact on a substantial number of small entities. As such, the Agency has prepared the following final regulatory flexibility analysis of the rule's likely economic impact on small businesses pursuant to section 604 of the Regulatory Flexibility Act. Section 604 of the RFA requires the Agency to provide a summary of the significant issues raised by public comments in response to the initial regulatory flexibility analysis. The Comments and Responses section includes the comments received on the interim final RFA and provides the Agency's responses to the comments.

The rule is the direct result of statutory obligations to implement the COOL provisions of the 2002 and 2008 Farm Bills. The intent of this law is to provide consumers with additional information on which to base their purchasing decisions. Specifically, the law imposes additional Federal labeling requirements for covered commodities sold by retailers subject to the law. Covered commodities include muscle cuts of beef (including veal), lamb, pork, goat; ground beef, ground lamb, ground pork, ground goat, and ground chicken; farm-raised fish and shellfish; wild fish and shellfish; chicken; perishable agricultural commodities; ginseng; peanuts; macadamia nuts; and pecans. The implementation date for mandatory COOL for the fish and shellfish covered commodities was September 30, 2004. The implementation date for the other covered commodities was September 30, 2008.

Under preexisting Federal laws and regulations, COOL is not universally required for the commodities covered by this rule. In particular, labeling of United States origin is not mandatory, and labeling of imported products at the consumer level is required only in certain circumstances. Thus, the Agency has not identified any Federal rules that would duplicate or overlap with this rule.

Many aspects of the mandatory COOL provisions are prescriptive and provide little regulatory discretion in rulemaking. The law requires a statutorily defined set of food retailers to label the country of origin and, if applicable, method of production (wild and/or farm-raised) of covered commodities. The law also prohibits USDA from using a mandatory identification system to verify the country of origin of covered commodities. However, the rule provides flexibility in allowing market participants to decide how best to implement mandatory COOL in their operations. Market participants other than those retailers defined by the statute may decide to sell products through marketing channels not subject to the rule. A complete discussion of the information collection and recordkeeping requirements and associated burdens appears in the Paperwork Reduction Act section.

The objective of the rule is to regulate the activities of retailers (as defined by the law) and their suppliers so that retailers will be able to fulfill their statutory obligations. The rule requires retailers to provide country of origin information for all of the covered commodities that they sell. It also requires all firms that supply covered commodities to these retailers to provide the retailers with the information needed to correctly label the covered commodities. In addition, all other firms in the supply chain for the covered commodities are potentially affected by the rule because country of origin information will need to be maintained and transferred along the entire supply chain. In general, the supply chains for the covered commodities consist of farms, fishing operations, processors, wholesalers, and retailers. Section 604 of the RFA requires the Agency to provide an estimate of the number of small entities to which the rule will apply. A listing of the number of entities in the supply chains for each of the covered commodities can be found in Table 1.

Retailers covered by this rule must meet the definition of a retailer as defined by Perishable Agricultural Commodities Act of 1930 (PACA). The PACA definition includes only those retailers handling fresh and frozen fruits and vegetables with an invoice value of at least $230,000 annually. By utilizing an existing regulatory definition for a retailer, Congress provided a simple and straightforward approach to determine which retailers are subject to the COOL program. In utilizing this definition, the number of retailers affected by this rule is considerably smaller than the total number of retailers nationwide. In addition, there is no requirement that firms in the supply chain must supply their products to retailers subject to the rule.

Because country of origin and, if applicable, method of production information will have to be passed along the supply chain and made available to consumers at the retail level, it is assumed that each participant in the supply chain as identified in Table 1 will likely encounter recordkeeping

costs as well as changes or modifications to their business practices. Absent more detailed information about each of the entities within each of the marketing channels, it is assumed that all such entities will be affected to some extent even though some producers and suppliers may choose to market their products through channels not subject to the requirements of this rule. Therefore, it is estimated that approximately 1,333,000 establishments owned by approximately 1,299,000 firms will be either directly or indirectly affected by this rule. The only change from the Interim Regulatory Impact Analysis contained in the August 1, 2008, interim final rule is the inclusion of affected firms and establishments in the fish and shellfish sector in this final rule. These changes and the use of more up-to-date information resulted in the number of establishments and firms increasing from the IRIA.

This rule potentially will have an impact on all participants in the supply chain, although the nature and extent of the impact will depend on the participant's function within the marketing chain. The rule likely will have the greatest impact on retailers and intermediaries (handlers, processors, wholesalers, and importers), while the impact on individual producers is likely to be relatively small.

The direct incremental costs are estimated for the rule at approximately $2,629 million as noted in Table 3. The increase in the direct incremental cost in the rule as compared to the IRIA is mainly the result of including fish and shellfish in this final rule.

There are two measures used by the Small Business Administration (SBA) to identify businesses as small: sales receipts or number of employees. In terms of sales, SBA classifies as small those grocery stores with less than $25 million in annual sales and specialty food stores with less than $6.5 million in annual sales (13 CFR 121.201). Warehouse clubs and superstores with less than $25 million in annual sales are also defined as small. SBA defines as small those agricultural producers with less than $750,000 in annual sales and fishing operations with less than $3.5 million in annual sales. Of the other businesses potentially affected by the rule, SBA classifies as small those manufacturing firms with less than 500 employees and wholesalers with less than 100 employees.

Retailers: While there are many potential retail outlets for the covered commodities, food stores, warehouse clubs, and superstores are the primary retail outlets for food consumed at home. In fact, food stores, warehouse clubs, and superstores account for 75.6 percent of all food consumed at home (Ref. 8). Therefore, the number of these stores provides an indicator of the number of entities *potentially* affected by this rule. The 2002 Economic Census (Ref. 9) shows there were 42,318 food stores, warehouse clubs, and superstore firms operated for the entire year. Most of these firms, however, would not be subject to the requirements of this rule.

The law defines the term retailer as that described in section 1(b) of the Perishable Agricultural Commodities Act of 1930 (PACA) Thus, under this final rule, a retailer is defined as any person licensed as a retailer under PACA. The number of such businesses is estimated from PACA data (Ref. 12). The PACA definition of a retailer includes only those retailers handling fresh and frozen fruits and vegetables with an invoice value of at least $230,000 annually. Therefore, the number of retailers affected by this rule is considerably smaller than the number of food retailers nationwide. USDA data indicate that there are 4,040 retail firms as defined by PACA that would thus be subject to the rule. As explained below, most small food store firms have been excluded from mandatory COOL based on the PACA definition of a retailer.

The 2002 Economic Census data provide information on the number of food store firms by sales categories. Of the 42,318 food store, warehouse club, and superstore firms, an estimated 41,629 firms had annual sales meeting the SBA definition of a small firm plus 689 other firms that would be classified as above the $25 million threshold. USDA has no information on the identities of these firms, and the PACA database does not identify firms by North American Industry Classification System code that would enable matching with Economic Census data. USDA assumes, however, that all or nearly all of the 689 large firms would meet the definition of a PACA retailer because most of these larger food retailers likely would handle fresh and frozen fruits and vegetables with an invoice value of at least $230,000 annually. Thus, an estimated 83 percent (3,351 out of 4,040) of the retailers subject to the rule are small. However, this is only 8.0 percent of the estimated total number of small food store retailers. In other words, an estimated 92.0 percent of small food store retailers would not be subject to the requirements of the rule.

Retailer costs under the rule are estimated at $1,029 million. Costs are estimated at $254,685 per retail firm and $28,273 per retail establishment. Retailers will face recordkeeping costs, costs associated with supplying country of origin and, if applicable, method of production information to consumers and possibly additional handling costs. These cost increases may result in changes to retailer business practices. The rule does not specify the systems that affected retailers must put in place to implement mandatory COOL. Instead, retailers will be given flexibility to develop or modify their own systems to comply with the rule. There are many ways in which the rule's requirements may be met and firms will likely choose the least cost method in their particular situation to comply with the rule.

Wholesalers: Any establishment that supplies retailers with one or more of the covered commodities will be required by retailers to provide country of origin and, if applicable, method of production information so that retailers can accurately supply that information to consumers. Of wholesalers potentially affected by the rule, SBA defines those having less than 100 employees as small. Importers of covered commodities will also be affected by the rule and are categorized as wholesalers in the data.

The 2004 Statistics of United States Businesses (Ref. 13) provides information on wholesalers by employment size. For meat and meat products wholesalers there is a total of 2,509 firms. Of these, 2,401 firms have less than 100 employees. This indicates that approximately 96 percent of meat wholesalers are considered as small firms using the SBA definition.

For fish and seafood wholesalers there are a total of 2,254 firms. Of these, 2,199 firms have less than 100 employees. Therefore, approximately 98 percent of the fish and seafood wholesalers could be considered as small firms.

There are 510 chicken wholesaler/distributor firms operating 564 facilities. Of these, there are 332 firms which have less than 100 employees, resulting in approximately 65 percent of the chicken wholesalers/distributors being classified as small businesses.

For fresh fruit and vegetable wholesalers there are a total of 4,654 firms. Of these, 4,418 firms have less than 100 employees, resulting in approximately 95 percent of the fresh fruit and vegetable wholesalers being classified as small businesses.

While information on ginseng wholesalers is not available, 46 dealers have been identified and they would all be considered as small businesses.

In addition to specialty wholesalers that primarily handle a single covered commodity, there are also general-line wholesalers that handle a wide range of

products. It is assumed that these general-line wholesalers likely handle at least one and possibly all of the covered commodities. Therefore, the number of general-line wholesale businesses is included among entities affected by the rule.

The 2004 Statistics of United States Businesses provides information on general-line grocery wholesalers by employment size. There were 3,037 firms in total, and 2,858 firms had less than 100 employees. This results in approximately 94 percent of the general-line grocery wholesalers being classified as small businesses.

In general, over 94 percent of the wholesalers are classified as small businesses. This indicates that most of the wholesalers affected by mandatory COOL may be considered as small entities as defined by SBA.

It is estimated that intermediaries (importers and domestic wholesalers, handlers, and processors) will incur costs under the rule of approximately $1,130 million. Costs are estimated at $48,219 per intermediary firm and $45,285 per establishment.

Wholesalers will encounter increased costs in complying with mandatory COOL. Wholesalers will likely face increased recordkeeping costs, costs associated with supplying country of origin and, if applicable, method of production information to retailers, possibly costs associated with segmenting products by country of origin and, if applicable, method of production and possibly additional handling costs. Some of the comments received on the proposed rule from wholesalers and retailers have indicated that retailers may choose to source covered commodities from a single supplier that procures the covered commodity from only one country in an attempt to minimize the costs associated with complying with mandatory COOL. These changes in business practices could lead to the further consolidation of firms in the wholesaling sector. The rule does not specify the systems that affected wholesalers must put in place to implement mandatory COOL. Instead, wholesalers will be given flexibility to develop their own systems to comply with the rule. There are many ways in which the rule's requirements may be met. In addition, wholesalers have the option of supplying covered commodities to retailers or other suppliers that are not covered by the rule.

Manufacturers: Any manufacturer that supplies retailers or wholesalers with a covered commodity will be required to provide country of origin information to retailers so that the information can be accurately supplied to consumers. Most manufacturers of covered commodities will likely print country of origin and, if applicable, method of production information on retail packages supplied to retailers. Of the manufacturers potentially affected by the rule, SBA defines those having less than 500 employees as small.

The 2004 Statistics of United States Businesses (Ref. 13) provides information on manufacturers by employment size. For livestock processing and slaughtering there is a total of 2,943 firms. Of these, 2,834 firms have less than 500 employees. This suggests that 96 percent of livestock processing and slaughtering operations would be considered as small firms using the SBA definition.

For chicken processing there are a total of 38 firms, only two of which are classified as small. Thus, only 5 percent of the chicken processors are small businesses.

For fresh and frozen seafood processing there is a total of 516 firms. Of these, 492 have less than 500 employees and thus, 95 percent are considered to be small firms.

For frozen fruit, juice, and vegetable manufacturers there is a total of 155 firms. There are 132 of these firms that are considered to be small. This suggests that 85 percent of the frozen fruit, juice, and vegetable manufacturers would be considered as small using the SBA definition.

There are a total of 161 roasted nuts and peanut butter manufacturers, which includes firms that do drying. Because only green and raw peanuts, macadamia nuts, and pecans will require retail country of origin labeling under this rule, it is estimated that no more than 5 percent of peanut, macadamia nut, and pecan manufacturing firms will be affected. Therefore, 8 peanut, macadamia nut, and pecan manufacturers are estimated to be affected, most if not all of which likely could be considered as small.

In general, approximately 95 percent of the manufacturers are classified as small businesses. This indicates that most of the manufacturers of covered commodities impacted by the rule would be considered as small entities as defined by SBA.

Manufacturers are included as intermediaries and additional costs for these firms are discussed in the previous section addressing wholesalers. Manufacturers of covered commodities will encounter increased costs in complying with mandatory COOL. Manufacturers like wholesalers will likely face increased recordkeeping costs, costs associated with supplying country of origin and, if applicable, method of production information to retailers, possibly costs associated with segmenting products by country of origin and, if applicable, method of production and possibly additional handling costs. Some of the comments received on the interim final rule from manufacturers have indicated that they may limit the number of sources from which they procure raw products. These changes in business practices could lead to the further consolidation of firms in the manufacturing sector. The rule does not specify the systems that affected manufacturers must put in place to implement mandatory COOL. Instead, manufacturers will be given flexibility to develop their own systems to comply with the rule. There are many ways in which the rule's requirements may be met.

Producers: Producers of fish, perishable agricultural commodities, peanuts, macadamia nuts, pecans, and ginseng are directly affected by mandatory COOL. Producers of cattle, hogs, sheep, and goats while not directly covered by this rule, will nevertheless be affected because covered meat commodities are produced from livestock. Whether directly or indirectly affected, these producers will more than likely be required by handlers and wholesalers to create and maintain country of origin and, if applicable, method of production information and transfer it to them so that they can readily transfer this information to retailers. Individuals who grow-out chickens for an integrator are not expected to be affected by this rule.

SBA defines a small agricultural producer as having annual receipts less than $750,000. The 2002 United States Census of Agriculture (Ref. 7) shows there are 1,018,359 farms that raise beef cows, and 2,458 are estimated to have annual receipts greater than $750,000. Thus, at least 99 percent of these beef cattle farms would be classified as small businesses according to the SBA definition. Similarly, an estimated 82 percent of hog farms would be considered as small and an estimated 99 percent of sheep, lamb, and goat farms would be considered as small.

Based on 2002 United States Census of Agriculture information, 92 percent of vegetable farms, 94 percent of fruit, nut, and berry farms, and 91 percent of peanut, macadamia nut, and pecan farms could be classified as small.

Based on 2005 Census of Aquaculture data (Ref. 14), it is estimated that at least 95 percent of fish and shellfish farming operations are small. Similar information on fishing operations is not

known to exist. However, it is assumed that the majority of these producers would be considered small businesses.

At the production level, agricultural producers will need to maintain records to establish country of origin and, if applicable, method of production information for the products they sell. This information will need to be conveyed as the products move through the supply chains. In general, additional producer costs include the cost of establishing and maintaining a recordkeeping system for the country of origin and, if applicable, method of production information, animal or product identification, and labor and training. Based on our knowledge of the affected industries as well as comments received on the interim final rules, the proposed rule, and the voluntary guidelines, it is believed that producers already have much of the information available that could be used to substantiate country of origin and, if applicable, method of production claims. Cattle, hog, lamb, sheep, chicken, and goat producers may have a slightly larger burden for recordkeeping than fruit, vegetable, ginseng, peanut, macadamia nut, and pecan producers because animals can be born in one country and fed and slaughtered in another country. However, this rule provides flexibility in labeling meat covered commodities of multiple origins.

The costs for producers are expected to be relatively limited and should not have a larger impact on small producers than large producers. Producer costs are estimated at $470 million, or an estimated $370 per firm.

Economic impact on small entities: Information on sales or employment is not available for all firms or establishments shown in Table 1. However, it is reasonable to expect that this rule will have a substantial impact on a number of small businesses. At the wholesale and retail levels of the supply chain, the efficiency of these operations may be affected. For packers and processors handling products sourced from multiple countries, there may also be a desire to operate separate shifts for processing products from different origins, or to split processing within shifts. In either case, costs are likely to increase. Records will need to be maintained to ensure that accurate country of origin and, if applicable, method of production information is retained throughout the process and to permit compliance and enforcement reviews.

Even if only domestic origin products or products from a single country of origin are handled, there may be additional procurement costs to source supplies from a single country of origin. Additional procurement costs may include higher transportation costs due to longer shipping distances and higher acquisition costs due to supply and demand conditions for products from a particular country of origin, whether domestic or foreign.

These additional costs may result in consolidations within the processor, manufacturer, and wholesaler sectors for these covered commodities. Also, to comply with the rule, retailers may seek to limit the number of entities from which they purchase covered commodities.

Additional alternatives considered: Section 604 of the RFA requires the Agency to describe the steps taken to minimize the significant economic impact on small entities including a discussion of alternatives considered. As previously mentioned, the COOL provisions of the Act leave little regulatory discretion in defining who is directly covered by this rule. The law explicitly identifies those retailers required to provide their customers with country of origin and, if applicable, method of production information for covered commodities (namely, retailers as defined by PACA).

The law also requires that any person supplying a covered commodity to a retailer provide information to the retailer indicating the country of origin and, if applicable, method of production of the covered commodity. Again, the law provides no discretion regarding this requirement for suppliers of covered commodities to provide information to retailers.

The rule has no mandatory requirement, however, for any firm other than statutorily defined retailers to make country of origin and, if applicable, method of production claims. In other words, no producer, processor, wholesaler, or other supplier is required to make and substantiate a country of origin and, if applicable, method of production claim provided that the commodity is not ultimately sold in the form of a covered commodity at the establishment of a retailer subject to the rule. Thus, for example, a processor and its suppliers may elect not to maintain country of origin and, if applicable, method of production information nor to make country of origin and, if applicable, method of production claims, but instead sell products through marketing channels not subject to the rule. Such marketing alternatives include foodservice, export, and retailers not subject to the rule. It is estimated that 47.0 percent of United States food sales occur through retailers subject to the rule, with the remaining 53.0 percent sold by retailers not subject to the rule or sold as food away from home. Additionally, food product sales into export markets provide marketing opportunities for producers and intermediaries that are not subject to the provisions of the rule. The majority of product sales are not subject to the rule, and there are many current examples of companies specializing in production of commodities for foodservice, export markets, and other channels of distribution that would not be directly affected by the rule.

The rule does not dictate systems that firms will need to put in place to implement the requirements. Thus, different segments of the affected industries will be able to develop their own least-cost systems to implement COOL requirements. For example, one firm may depend primarily on manual identification and paper recordkeeping systems, while another may adopt automated identification and electronic recordkeeping systems.

The rule has no requirements for firms to report to USDA. Compliance audits will be conducted at firms' places of business. As stated previously, required records may be kept by firms in the manner most suitable to their operations and may be hardcopy documents, electronic records, or a combination of both. In addition, the rule provides flexibility regarding where records may be kept. If the product is pre-labeled with the necessary country of origin and, if applicable, method of production information, records documenting once-forward and once-back chain of custody information are sufficient as long as the source of the claim can be tracked and verified. Such flexibility should reduce costs for small entities to comply with the rule.

The rule requires that covered commodities at subject retailers be labeled with country of origin and, as applicable, method of production information, that suppliers of covered commodities provide such information to retailers, and that retailers and their suppliers maintain records and information sufficient to verify all country of origin and method of production claims. The rule provides flexibility regarding the manner in which the required information may be provided by retailers to consumers. The rule provides flexibility in the manner in which required country of origin information is provided by suppliers to retailers, and in the manner in which records and information are maintained to substantiate country of origin claims. Thus, the rule provides the maximum flexibility practicable to enable small

entities to minimize the costs of the rule on their operations.

Paperwork Reduction Act

Pursuant to the Paperwork Reduction Act (PRA) (44 U.S.C 3501–3520) the information collection provisions contained in this rule have been approved by OMB and have been assigned OMB Control Number 0581–0250. This revision reflects a 155,464 increase in the number of annual responses and an 861,282 increase in the number of annual burden hours from the August 1, 2008, interim final rule due to the inclusion of fish and shellfish data. The Comments and Responses section includes the relevant comments received and provides the Agency's responses to the comments. A description of these provisions is given below with an estimate of the annual recordkeeping burden.

Title: Mandatory Country of Origin Labeling of Covered Commodities.

OMB Number: 0581–0250.

Type of Request: Revision of a previously approved collection.

Expiration Date: November 30, 2011.

Abstract: The COOL provision in the 2002 and 2008 Farm Bills requires that specified retailers inform consumers as to the country of origin and, if applicable, method of production (wild and/or farm-raised) of covered commodities. Covered commodities included in this rulemaking are: Muscle cuts of beef, lamb, goat, pork, and chicken; ground beef, ground lamb, ground pork, ground goat, and ground chicken; wild and farm-raised fish and shellfish; perishable agricultural commodities; ginseng; peanuts; macadamia nuts; and pecans. Upon request by USDA representatives, suppliers and retailers subject to this subpart shall make available records maintained in the normal course of business that verify an origin claim. Such records shall be provided within 5 business days of the request and may be maintained in any location. Any person engaged in the business of supplying a covered commodity to a retailer (i.e., including but not limited to growers, distributors, handlers, packers, and processors), whether directly or indirectly, must make country of origin and, if applicable, method of production information available to the retailer and must maintain records to establish and identify the immediate previous source and immediate subsequent recipient of a covered commodity for a period of 1 year from the date of the transaction. In addition, the supplier of a covered commodity that is responsible for initiating a country(ies) of origin claim, which in the case of beef, lamb, chicken goat, and pork is the slaughter facility, must possess records that are necessary to substantiate that claim for a period of 1 year from the date of the transaction. In the case of all covered commodities, producer affidavits shall also be considered acceptable records that suppliers may utilize to initiate origin claims, provided it is made by someone having first-hand knowledge of the origin of the covered commodity and identifies the covered commodity unique to the transaction.

For an imported covered commodity, the importer of record must ensure that records provide clear product tracking from the port of entry into the United States to the immediate subsequent recipient. In addition, the records must accurately reflect the country of origin in relevant United States Customs and Border Protection entry documents and information systems and must be maintained for a period of 1 year from the date of the transaction.

As previously mentioned, upon request by USDA representatives, suppliers and retailers subject to this subpart shall make available to USDA representatives, records maintained in the normal course of business that verify an origin claim. Such records shall be provided within 5 business days of the request and may be maintained in any location.

Description of Recordkeepers: Individuals who supply covered commodities, whether directly to retailers or indirectly through other participants in the marketing chain, are required to establish and maintain country of origin and, if applicable, method of production information for the covered commodities and supply this information to retailers. As a result, producers, handlers, manufacturers, wholesalers, importers, and retailers of covered commodities will be affected by this rule.

Burden: Approximately 1,333,000 establishments owned by approximately 1,299,000 firms are estimated to be either directly or indirectly affected by this rule. The only changes from the IRIA are increases in the numbers of affected firms and establishments due to including and updating fish and shellfish information.

In general, the supply chain for each of the covered commodities includes agricultural producers or fish harvesters, processors, wholesalers, importers, and retailers. Imported products may be introduced at any level of the supply chain. Other intermediaries, such as auction markets, may be involved in transferring products from one stage of production to the next. The rule's paperwork burden will be incurred by the number and types of firms and establishments listed in Table 9, which follows.

TABLE 9—COSTS ASSOCIATED WITH PAPERWORK BURDEN

Type	Firms	Initial costs	Establishments	Maintenance costs	Total costs
Producers:					
Cattle & Calves	971,400	75,699,259	971,400	145,651,716	221,350,975
Sheep & Lambs	69,090	5,384,046	69,090	10,359,355	15,743,400
Hogs & Pigs	65,540	5,107,401	65,540	9,827,068	14,934,469
Goats	9,146	712,745	9,146	1,371,381	2,084,126
Chicken Producer and Processor	38	2,961	168	25,190	28,151
Farm-Raised Fish & Shellfish	3,752	292,386	3,752	562,575	854,961
Fishing	71,128	5,542,863	71,142	3,555,677	9,098,540
Fruits & Vegetables	79,800	6,218,654	79,800	3,788,984	10,007,638
Ginseng	190	14,806	190	9,021	23,828
Peanuts	650	50,653	650	30,863	81,516
Pecans	1,119	87,192	1,119	53,130	140,323
Macadamia	53	4,130	53	2,516	6,647
Handlers, Processors, & Wholesalers:					
Stockyards, Dealers & Market Agencies	6,807	8,910,363	6,807	6,589,040	15,499,403
Livestock Processing & Slaughtering	2,943	3,582,387	3,207	62,086,237	65,938,624
Meat & Meat Product Wholesale	2,509	3,284,281	2,706	2,619,354	5,903,635

TABLE 9—COSTS ASSOCIATED WITH PAPERWORK BURDEN—Continued

Type	Firms	Initial costs	Establishments	Maintenance costs	Total costs
Chicken Processor and Wholesaler	510	667,590	564	545,941	1,213,531
Fresh & Frozen Seafood Processing	516	675,444	590	571,108	1,246,552
Fish & Seafood Wholesale	2,254	2,950,486	2,330	2,255,393	5,205,879
Frozen Fruit, Juice & Vegetable Mfg	155	202,895	247	239,091	441,986
Fresh Fruit & Vegetable Wholesale	4,654	6,092,086	5,016	4,855,388	10,947,474
Ginseng Dealers	46	60,214	46	44,527	104,741
Roasted Nuts & Peanut Butter Mfg	8	10,472	9	8,712	19,184
Peanut, Pecans, & Macadamia Nut Wholesalers	5	6,545	5	4,840	11,385
General Line Grocery Wholesalers	3,037	3,975,433	3,436	3,325,979	7,301,412
Retailers	4,040	5,288,360	36,392	247,264,534	252,552,894
Totals					
Producers	1,271,906	99,117,097	1,262,050	175,237,476	274,354,573
Handlers, Processors, & Wholesalers	23,444	30,688,196	24,963	83,145,610	113,833,806
Retailers	4,040	5,288,360	36,392	247,264,534	252,552,894
Grand Total	1,299,390	135,093,653	1,333,405	505,647,620	640,741,274

The affected firms and establishments will broadly incur two types of costs. First, firms will incur initial or start-up costs to comply with the rule. Initial costs will be borne by each firm, even though a single firm may operate more than one establishment. Second, enterprises will incur additional recordkeeping costs associated with storing and maintaining records on an ongoing basis. These activities will take place in each establishment operated by each affected business.

With respect to initial recordkeeping costs, it is believed that most producers currently maintain many of the types of records that would be needed to substantiate country of origin and, if applicable, method of production claims. However, producers do not typically record or pass along country of origin and, if applicable, method of production information to subsequent purchasers. Therefore, producers will incur some additional incremental costs to record, maintain, and transfer country of origin and, if applicable, method of production information to substantiate required claims made at retail. Because much of the necessary recordkeeping has already been developed during typical farm, ranch, and fishing operations, it is estimated that the incremental costs for producers to supplement existing records with country of origin and, if applicable, method of production information will be relatively small per firm. Examples of initial or start-up costs would be any additional recordkeeping burden needed to record the required country of origin and, if applicable, method of production information and transfer this information to handlers, processors, wholesalers, or retailers via records used in the normal course of business.

Producers will need an estimated 4 hours to modify an established system for organizing records to carry out the purposes of this regulation. This additional time would be required to modify existing recordkeeping systems to incorporate any added information needed to substantiate country of origin claims. Although not all farm products ultimately will be sold at retail establishments covered by this rule, it is assumed that virtually all producers will wish to keep their marketing options as flexible as possible. Thus, all producers of covered commodities or livestock (in the case of the covered meat commodities) will establish recordkeeping systems sufficient to substantiate country of origin claims. It is also recognized that some operations will require substantially more than 4 hours modifying their recordkeeping systems. In particular, it is believed that livestock backgrounders, stockers, and feeders will face a greater burden in establishing recordkeeping systems. These types of operations will need to track country of origin information for animals brought into the operation as well as for animals sold from the operation via records used in the normal course of business, increasing the burden of substantiating country of origin claims. Conversely, operations such as fruit and vegetable farms that produce only United States products likely will require little if any change to their existing recordkeeping systems in order to substantiate country of origin claims. Overall, it is believed that 4 hours represents a reasonable estimate of the average additional time that will be required per year across all types of producers.

In estimating initial recordkeeping costs, 2006 wage rates and benefits published by the Bureau of Labor statistics from the National Compensation Survey are used.

For producers, it is assumed that the added work needed to initially adapt an existing recordkeeping system for country of origin and, if applicable, method of production information is primarily a bookkeeping task. This task may be performed by independent bookkeepers, or in the case of operations that perform their own bookkeeping, an individual with equivalent skills. The Bureau of Labor Statistics (BLS) publishes wage rates for bookkeepers, accounting, and auditing clerks (Ref. 15). It is assumed that this wage rate represents the cost for producers to hire an independent bookkeeper. In the case of producers who currently perform their own bookkeeping, it is assumed that this wage rate represents the opportunity cost of the producers' time for performing these tasks. The May 2006 wage rate is estimated at $15.28 per hour. For this analysis, an additional 27.5 percent is added to the wage rate to account for total benefits which includes social security, unemployment insurance, workers compensation, etc. The estimate of this additional cost to employers is published by the BLS (Ref. 15). At 4 hours per firm and a cost of $19.48 per hour, initial recordkeeping costs to producers are estimated at approximately $135.1 million to modify existing recordkeeping systems in order to substantiate country of origin and, if applicable, method of production claims.

The recordkeeping burden on handlers, processors, wholesalers, and retailers is expected to be more complex than the burden most producers face. These operations will need to maintain country of origin and, if applicable, methods of production information on the covered commodities purchased and subsequently furnish that information to the next participant in the supply chain. This will require adding additional information to a firm's bills of lading, invoices, or other records associated with movement of covered commodities from purchase to sale. Similar to producers, however, it is believed that most of these operations already maintain many of the types of necessary records in their existing systems. Thus, it is assumed that country of origin and, if applicable, method of production information will require only modification of existing recordkeeping systems rather than development of entirely new systems.

The Label Cost Model Developed for FDA by RTI International (Ref. 16; Ref. 17) is used to estimate the cost of including additional country of origin and, if applicable, method of production information to an operation's records. It is assumed that a limited information, one-color redesign of a paper document will be sufficient to comply with the rule's recordkeeping requirements. The number of hours required to complete the redesign is estimated to be 29 with an estimated cost at $1,309 per firm. While the cost will be much higher for some firms and lower for others, it is believed that $1,309 represents a reasonable estimate of average cost for all firms. Based on this, it is estimated that the initial recordkeeping costs to intermediaries such as handlers, processors, and wholesalers (importers are included with wholesalers) will be approximately $31 million, and initial recordkeeping costs at retail will be approximately $5 million. The recordkeeping cost to producers increases due to the inclusion of fish and shellfish.

The total initial recordkeeping costs for all firms are thus estimated at approximately $135 million. This increase in the recordkeeping cost as compared to the recordkeeping costs in the interim final rule is due to the inclusion of fish and shellfish.

In addition to these one-time costs to modify recordkeeping systems, enterprises will incur additional recordkeeping costs associated with storing and maintaining records. These costs are referred to as maintenance costs in Table 9. Again, the marginal cost for producers to maintain and store any additional information needed to substantiate country of origin and, if applicable, method of production claims is expected to be relatively small.

For wild fish harvesters, fruit, vegetable, and ginseng producers, and peanut, macadamia nut, and pecan producers, country of origin and, if applicable, method of production generally is established at the time that the product is harvested, and thus there is no need to track country of origin and, if applicable, method of production information throughout the production lifecycle of the product. Likewise, this is also the case for chicken as the vast majority of chicken products sold by covered retailers are from chickens that are produced in a controlled environment in the United States. This group of producers is estimated to require an additional 4 hours a year, or 1 hour per quarter, to maintain country of origin and, if applicable, method of production information.

Compared to wild fish harvesters, chicken, fruit, vegetable, ginseng, peanut, macadamia nut, and pecan producers, it is expected that fish farmers and livestock producers will incur higher costs to maintain country of origin and, if applicable, method of production information. Wild fish, chicken, fruits, vegetables, ginseng, peanuts, and macadamia nuts are generally harvested once and then shipped by the producer to the first handler. In contrast, farm-raised fish and livestock can and often do move through several geographically dispersed operations prior to sale for processing or slaughter. Cattle, for example, typically change ownership between 2 to 3 times before they are slaughtered and processed. Fish and livestock may be acquired from other countries by United States producers, which may complicate the task of tracking country of origin and, if applicable, method of production information. Because animals are frequently sorted and regrouped at various stages of production and may change ownership several times prior to slaughter, country of origin information will need to be maintained on animals as they move through their lifecycle. Thus, it is expected that the recordkeeping burden for fish farmers and livestock producers will be higher than it will be for producers of other covered commodities. It is estimated that these producers will require an additional 12 hours a year, or 1 hour per month, to maintain country of origin and, if applicable, method of production records. Again, this is an average for all enterprises.

It is assumed that farm labor will primarily be responsible for maintaining country of origin information at producers' enterprises. NASS data (Ref. 18) are used to estimate average farm wage rates—$9.80 per hour for livestock workers and $9.31 per hour for other crops workers. Applying the rate of 27.5 percent to account for benefits, this results in an hourly rate of $12.50 for livestock workers and $11.87 for other crops workers. Wage rates for fish workers were unavailable, so the average wage rate for livestock workers is used. Assuming 12 hours of labor per year for livestock and farmed fish operations and 4 hours per year for all other operations, the estimated total annual maintenance costs to producers is $175 million which is higher than the initial maintenance costs in the interim final rule. The increase in the estimated maintenance cost is due to the inclusion of fish and shellfish in this final rule.

It is expected that intermediaries such as handlers, processors, and wholesalers will face higher costs per enterprise to maintain country of origin and, if applicable, method of production information compared to costs faced by producers. Much of the added cost is attributed to the larger average size of these enterprises compared to the average producer enterprise. In addition, these intermediaries will need to track products both coming into and going out of their businesses.

With the exception of livestock processing and slaughtering establishments, the maintenance burden hours for country of origin and, if applicable, method of production recordkeeping is estimated to be 52 hours per year per establishment. For this part of the supply chain, the recordkeeping activities are ongoing and are estimated to require an additional hour a week. It is expected, however, that livestock processing and slaughtering enterprises will experience a more intensive recordkeeping burden. These enterprises disassemble carcasses into many individual cuts, each of which must maintain its country of origin identity. In addition, businesses that produce ground beef, lamb, goat, and pork products may commingle product from multiple origins, which will require some monitoring and recordkeeping to ensure accurate labeling and to substantiate the country of origin information provided to retailers. Maintenance of the recordkeeping system at these establishments is estimated to total 1,040 hours per establishment, or 20 hours per week.

Maintenance activities will include inputting, tracking, and storing country of origin and, if applicable, method of production information for each covered

commodity. Since this is mostly an administrative task, the cost is estimated by using the May 2006 BLS wage rate from the National Compensation Survey for administrative support occupations ($14.60 per hour with an additional 27.5 percent added to cover benefit costs for a total of $18.62 per hour). This occupation category includes stock and inventory clerks and record clerks. Coupled with the assumed hours per establishment, the resulting total annual maintenance costs to handlers, processors, and wholesalers and other intermediaries are estimated at approximately $83 million.

Retailers will need to supply country of origin and, if applicable, method of production information for each covered commodity sold at each store. Therefore, additional recordkeeping maintenance costs are believed to affect each establishment. Because tracking of the covered commodities will be done daily, it is believed that an additional hour of recordkeeping activities for country of origin and, if applicable, method of production information will be incurred daily at each retail establishment. These additional activities result in an estimated 365 additional hours per year per establishment. Using the BLS wage rate for administrative support occupations ($14.60 per hour with an additional 27.5 percent added to cover benefit costs for a total of $18.62 per hour) results in total estimated annual maintenance costs to retailers of $247 million.

The total maintenance recordkeeping costs for all enterprises are thus estimated at approximately $506 million. The increase in the total maintenance cost over the maintenance cost estimate in the interim final rule is due to the inclusion of fish and shellfish in this final rule.

The total first-year recordkeeping burden is calculated by summing the initial and maintenance costs. The total recordkeeping costs are estimated for producers at approximately $274 million; for handlers, processors, and wholesalers at approximately $114 million; and for retailers at approximately $253 million. The total recordkeeping cost for all participants in the supply chain for covered commodities is estimated at $641 million for the first year, with subsequent maintenance costs of $506 million per year.

Annual Reporting and Recordkeeping Burden for the First Year (Initial): Public reporting burden for establishing this initial recordkeeping is estimated to average 4.5 hours per year per individual recordkeeper.

Estimated Number of Firms Recordkeepers: 1,299,390.

Estimated Total Annual Burden: 5,884,661 hours.

Annual Reporting and Recordkeeping Burden (Maintenance): Public reporting burden for recordkeeping storage and maintenance is estimated to average 23.8 hours per year per individual recordkeeper.

Estimated Number of Establishments Recordkeepers: 1,333,405.

Estimated Total Annual Burden: 31,790,642 hours.

To the extent possible, the Agency complies with the e-Government Act, which requires Government agencies in general to provide the public the option of submitting information or transacting business electronically to the maximum extent possible. This information collection has no forms and is only for recordkeeping purposes. Therefore, the provisions of an electronic submission alternative are not required.

References

1. Dinopoulos, Elias, Grigorios Livanis, and Carol West. ''How Cool is C.O.O.L.?'' Working Paper WPTC 05–11, University of Florida, International Agricultural Trade and Policy Center, 2005.
2. Plastina, Alejandro and Konstantinos Giannakas. ''Market and Welfare Effects of Mandatory Country-of-Origin Labeling in the US Specialty Crops Sector.'' Selected Paper American Agricultural Economics Association Annual Meeting, Portland, Oregon, July 2007.
3. Mabiso, Athur, James Sterns, Lisa House, and Allen Wysocki. ''Estimating Consumers'' Willingness-To-Pay for Country-Of-Origin Labels in Fresh Apples and Tomatoes: A Double-Hurdle Probit Analysis of American Data Using Factor Scores.'' American Agricultural Economics Association Annual Meeting, Providence, Rhode Island, July 2005.
4. Krissoff, Barry, Fred Kuchler, Kenneth Nelson, Janet Perry, and Agapi Somwaru. ''Country of Origin Labeling: Theory and Observation. USDA, ERS, WRS–04–02, January 2004.
5. NASS, USDA, Wisconsin Department of Agriculture. Wisconsin 2007 Agricultural Statistics. *http://www.nass.usda.gov/Statistics_by_State/Wisconsin/*
6. NASS, USDA, Hawaii Department of Agriculture. Hawaii 2007 Agricultural Statistics. *http://www.nass.usda.gov/hi/stats/t_of_c.htm*
7. NASS, USDA. 2002 Census of Agriculture.
8. ERS, USDA. Food CPI, Prices and Expenditures: Sales of Food at Home by Type of Outlet. *http://www.ers.usda.gov/Briefing/CPIFoodAndExpenditures/Data/table16.htm*
9. U.S. Census Bureau. 2002 Economic Census. Retail Trade Subject Series. Establishment and Firm Size. EC97R44S–SZ. Issued September 2004.
10. Office of the Chief Economist, USDA. USDA Agricultural Baseline Projections to 2016, Staff Report WAOB–2007–1. February 2007.
11. Bureau of Economic Analysis. *http://www.bea.gov/national/index.htm#gdp.*
12. AMS, USDA. Perishable Agricultural Commodities Act database.
13. U.S. Census Bureau. 2004 Statistics of U.S. Businesses.
14. NASS, USDA. 2005 Census of Aquaculture.
15. Bureau of Labor Statistics, Department of Labor, National Compensation Survey, May 2006, Employer Cost for Employee Compensation.
16. Food and Drug Administration. ''Establishment and Maintenance of Records Under the Public Health Security and Bioterrorism Preparedness and Response Act of 2002,'' proposed rule. May 9, 2003.
17. RTI, International 2000. FDA Labeling Cost Model: Final Report. Revised April 2002.
18. NASS, USDA. Farm Labor, August 17, 2007.

Executive Order 12988

The contents of this rule were reviewed under Executive Order 12988, Civil Justice Reform. This rule is not intended to have a retroactive effect. States and local jurisdictions are preempted from creating or operating country of origin labeling programs for the commodities specified in the Act and these regulations. With regard to other Federal statutes, all labeling claims made in conjunction with this regulation must be consistent with other applicable Federal requirements. There are no administrative procedures that must be exhausted prior to any judicial challenge to the provisions of this rule.

Civil Rights Review

AMS considered the potential civil rights implications of this rule on minorities, women, or persons with disabilities to ensure that no person or group shall be discriminated against on the basis of race, color, national origin, gender, religion, age, disability, sexual orientation, marital or family status, political beliefs, parental status, or protected genetic information. This review included persons that are employees of the entities that are subject to these regulations. This final rule does not require affected entities to relocate or alter their operations in ways that could adversely affect such persons or groups. Further, this rule will not deny any persons or groups the benefits of the program or subject any persons or groups to discrimination.

Executive Order 13132

This rule has been reviewed under Executive Order 13132, Federalism. This Order directs agencies to construe, in regulations and otherwise, a Federal statute to preempt State law only where

the statute contains an express preemption provision or there is some other clear evidence to conclude that the Congress intended preemption of State law, or where the exercise of State authority conflicts with the exercise of Federal authority under the Federal statute. This rule is required by the 2002 Farm Bill, as amended by the 2008 Farm Bill.

While this statute does not contain an express preemption provision, it is clear from the language in the statute that Congress intended preemption of State law. The law assigns enforcement responsibilities to the Secretary and encourages the Secretary to enter into partnerships with States with enforcement infrastructure to assist in the administration of the program. The law provides for a 30-day period in which retailers and suppliers may take the necessary corrective action after receiving notice of a nonconformance. The Secretary can impose a civil penalty only if the retailer or supplier has not made a good faith effort to comply and only after the Secretary provides notice and an opportunity for a hearing. Allowing private rights of actions would frustrate the purpose of this comprehensive enforcement system in which Congress struck a delicate balance of imposing a requirement, but ensuring that the agency had wide latitude in enforcement discretion. Thus, it is clear that State laws and other actions were intended to be preempted.

Several States have implemented mandatory programs for country of origin labeling of certain commodities. For example, Alabama, Arkansas, Mississippi, and Louisiana have origin labeling requirements for certain seafood products. Other States including Wyoming, Idaho, North Dakota, South Dakota, Louisiana, Kansas, and Mississippi have origin labeling requirements for certain meat products. In addition, the State of Florida and the State of Maine have origin labeling requirements for fresh produce items.

To the extent that these State country of origin labeling programs encompass commodities that are not governed by this regulation, the States may continue to operate them. For those State country of origin labeling programs that encompass commodities that are governed by this regulation, these programs are preempted. In most cases, the requirements contained within this rule are more stringent and prescriptive than the requirements of the State programs. With regard to consultation with States, as directed by the Executive Order 13132, AMS has consulted with the States that have country of origin labeling programs.

The effective date of this regulation is March 16, 2009. In the August 1, 2008, interim final rule for the remaining covered commodities, the Agency indicated that during the six month period following the effective date of that regulation, AMS would conduct an industry education and outreach program concerning the provisions and requirements of that rule. AMS will continue this period of informed compliance for this regulation through March 2009.

List of Subjects

7 CFR Part 60

Agricultural commodities, Fish, Food labeling, Reporting and recordkeeping requirements.

7 CFR Part 65

Agricultural commodities, Food labeling, Meat and meat products, Macadamia nuts, Peanuts, Pecans, Reporting and recordkeeping requirements.

■ For the reasons set forth in the preamble, 7 CFR chapter I is amended as follows:

■ 1. Part 60 is revised to read as follows:

PART 60—COUNTRY OF ORIGIN LABELING FOR FISH AND SHELLFISH

Subpart A—General Provisions

Definitions

Sec.
60.101 Act.
60.102 AMS.
60.103 Commingled covered commodities.
60.104 Consumer package.
60.105 Covered commodity.
60.106 Farm-raised fish.
60.107 Food service establishment.
60.108–60.110 [Reserved]
60.111 Hatched.
60.112 Ingredient.
60.113 [Reserved]
60.114 Legibly.
60.115 [Reserved]
60.116 Person.
60.117 [Reserved]
60.118 Pre-labeled.
60.119 Processed food item.
60.120 [Reserved]
60.121 [Reserved]
60.122 Production step.
60.123 Raised.
60.124 Retailer.
60.125 Secretary.
60.126 [Reserved]
60.127 United States.
60.128 United States country of origin.
60.129 USDA.
60.130 U.S. flagged vessel.
60.131 Vessel flag.
60.132 Waters of the United States.
60.133 Wild fish and shellfish.

Country of Origin Notification

60.200 Country of origin notification.
60.300 Labeling.

Recordkeeping

60.400 Recordkeeping requirements.
Appendix A to Subpart A-Exclusive Economic Zone and Maritime Boundaries; Notice of Limits

Authority: 7 U.S.C. 1621 *et seq.*

Subpart A—General Provisions

Definitions

§ 60.101 Act.

Act means the Agricultural Marketing Act of 1946 (7 U.S.C. 1621 *et seq.*).

§ 60.102 AMS.

AMS means the Agricultural Marketing Service, United States Department of Agriculture.

§ 60.103 Commingled covered commodities.

Commingled covered commodities means covered commodities (of the same type) presented for retail sale in a consumer package that have been prepared from raw material sources having different origins.

§ 60.104 Consumer package.

Consumer package means any container or wrapping in which a covered commodity is enclosed for the delivery and/or display of such commodity to retail purchasers.

§ 60.105 Covered commodity.

(a) *Covered commodity* means:

(1) [Reserved]

(2) [Reserved]

(3) Farm-raised fish and shellfish (including fillets, steaks, nuggets, and any other flesh);

(4) Wild fish and shellfish (including fillets, steaks, nuggets, and any other flesh);

(5) [Reserved]

(6) [Reserved]

(b) Covered commodities are excluded from this part if the commodity is an ingredient in a processed food item as defined in § 60.119.

§ 60.106 Farm-raised fish.

Farm-raised fish means fish or shellfish that have been harvested in controlled environments, including ocean-ranched (e.g., penned) fish and including shellfish harvested from leased beds that have been subjected to production enhancements such as providing protection from predators, the addition of artificial structures, or providing nutrients; and fillets, steaks, nuggets, and any other flesh from a farm-raised fish or shellfish.

§ 60.107 Food service establishment.

Food service establishment means a restaurant, cafeteria, lunch room, food stand, saloon, tavern, bar, lounge, or other similar facility operated as an enterprise engaged in the business of selling food to the public. Similar food service facilities include salad bars, delicatessens, and other food enterprises located within retail establishments that provide ready-to-eat foods that are consumed either on or outside of the retailer's premises.

§ 60.108–60.110 [Reserved]

§ 60.111 Hatched.

Hatched means emerged from the egg.

§ 60.112 Ingredient.

Ingredient means a component either in part or in full, of a finished retail food product.

§ 60.113 [Reserved]

§ 60.114 Legible.

Legible means text that can be easily read.

§ 60.115 [Reserved]

§ 60.116 Person.

Person means any individual, partnership, corporation, association, or other legal entity.

§ 60.117 [Reserved]

§ 60.118 Pre-labeled.

Pre-labeled means a covered commodity that has the commodity's country of origin and method of production and the name and place of business of the manufacturer, packer, or distributor on the covered commodity itself, on the package in which it is sold to the consumer, or on the master shipping container. The place of business information must include at a minimum the city and state or other acceptable locale designation.

§ 60.119 Processed food item.

Processed food item means a retail item derived from fish or shellfish that has undergone specific processing resulting in a change in the character of the covered commodity, or that has been combined with at least one other covered commodity or other substantive food component (e.g., breading, tomato sauce), except that the addition of a component (such as water, salt, or sugar) that enhances or represents a further step in the preparation of the product for consumption, would not in itself result in a processed food item. Specific processing that results in a change in the character of the covered commodity includes cooking (e.g., frying, broiling, grilling, boiling, steaming, baking, roasting), curing (e.g., salt curing, sugar curing, drying), smoking (hot or cold), and restructuring (e.g., emulsifying and extruding, compressing into blocks and cutting into portions). Examples of items excluded include fish sticks, surimi, mussels in tomato sauce, seafood medley, coconut shrimp, soups, stews, and chowders, sauces, pates, smoked salmon, marinated fish fillets, canned tuna, canned sardines, canned salmon, crab salad, shrimp cocktail, gefilte fish, sushi, and breaded shrimp.

§ 60.120 [Reserved]

§ 60.121 [Reserved]

§ 60.122 Production step.

Production step means in the case of:

(a) [Reserved]

(b) Farm-raised Fish and Shellfish: Hatched, raised, harvested, and processed.

(c) Wild Fish and Shellfish: Harvested and processed.

§ 60.123 Raised.

Raised means in the case of:

(a) [Reserved]

(b) Farm-raised fish and shellfish as it relates to the production steps defined in § 60.122: The period of time from hatched to harvested.

§ 60.124 Retailer.

Retailer means any person licensed as a retailer under the Perishable Agricultural Commodities Act of 1930 (7 U.S.C. 499a(b)).

§ 60.125 Secretary.

Secretary means the Secretary of Agriculture of the United States or any person to whom the Secretary's authority has been delegated.

§ 60.126 [Reserved]

§ 60.127 United States.

United States means the 50 States, the District of Columbia, the Commonwealth of Puerto Rico, the U.S. Virgin Islands, American Samoa, Guam, the Northern Mariana Islands, and any other Commonwealth, territory, or possession of the United States, and the waters of the United States as defined in § 60.132.

§ 60.128 United States country of origin.

United States country of origin means in the case of:

(a) [Reserved]

(b) [Reserved]

(c) Farm-raised Fish and Shellfish: From fish or shellfish hatched, raised, harvested, and processed in the United States, and that has not undergone a substantial transformation (as established by U.S. Customs and Border Protection) outside of the United States.

(d) Wild-fish and Shellfish: From fish or shellfish harvested in the waters of the United States or by a U.S. flagged vessel and processed in the United States or aboard a U.S. flagged vessel, and that has not undergone a substantial transformation (as established by U.S. Customs and Border Protection) outside of the United States.

(e) [Reserved]

(f) [Reserved]

§ 60.129 USDA.

USDA means the United States Department of Agriculture.

§ 60.130 U.S. flagged vessel.

U.S. flagged vessel means:

(a) Any vessel documented under chapter 121 of title 46, United States Code; or

(b) Any vessel numbered in accordance with chapter 123 of title 46, United States Code.

§ 60.131 Vessel flag.

Vessel flag means the country of registry for a vessel, ship, or boat.

§ 60.132 Waters of the United States.

Waters of the United States means those fresh and ocean waters contained within the outer limit of the Exclusive Economic Zone (EEZ) of the United States as described by the Department of State Public Notice 2237 published in the **Federal Register** volume 60, No. 163, August 23, 1995, pages 43825–43829. The Department of State notice is republished in Appendix A to this subpart.

§ 60.133 Wild fish and shellfish.

Wild fish and shellfish means naturally-born or hatchery-originated fish or shellfish released in the wild, and caught, taken, or harvested from non-controlled waters or beds; and fillets, steaks, nuggets, and any other flesh from a wild fish or shellfish.

Country of Origin Notification

§ 60.200 Country of origin notification.

In providing notice of the country of origin as required by the Act, the following requirements shall be followed by retailers:

(a) *General.* Labeling of covered commodities offered for sale whether individually, in a bulk bin, display case, carton, crate, barrel, cluster, or consumer package must contain country of origin and method of production information (wild and/or farm-raised) as set forth in this regulation.

(b) *Exemptions.* Food service establishments as defined in § 60.107

are exempt from labeling under this subpart.

(c) *Exclusions.* A covered commodity is excluded from this subpart if it is an ingredient in a processed food item as defined in § 60.119.

(d) *Designation of Method of Production (Wild and/or Farm-Raised).* Fish and shellfish covered commodities shall also be labeled to indicate whether they are wild and/or farm-raised as those terms are defined in this regulation.

(e) *Labeling Covered Commodities of United States Origin.* A covered commodity may only bear the declaration of ''Product of the U.S.'' at retail if it meets the definition of United States Country of Origin as defined in § 60.128.

(f) *Labeling Imported Products That Have Not Undergone Substantial Transformation in the United States.* An imported covered commodity shall retain its origin as declared to U.S. Customs and Border Protection at the time the product entered the United States, through retail sale, provided that it has not undergone a substantial transformation (as established by U.S. Customs and Border Protection) in the United States.

(g) *Labeling Imported Products That Have Subsequently Been Substantially Transformed in the United States.*

(1) [Reserved]

(2) Wild and Farm-Raised Fish and Shellfish: If a covered commodity was imported from country X and subsequently substantially transformed (as established by U.S. Customs and Border Protection) in the United States or aboard a U.S. flagged vessel, such product shall be labeled at retail as ''From country X, processed in the United States.'' Alternatively, the product may be labeled as ''Product of country X and the United States''.

(h) *Labeling Commingled Covered Commodities.* (1) For imported covered commodities that have not subsequently been substantially transformed in the United States that are commingled with other imported covered commodities that have not been substantially transformed in the United States, and/or covered commodities of U.S. origin and/or covered commodities as described in § 60.200(g), the declaration shall indicate the countries of origin for covered commodities in accordance with existing Federal legal requirements.

(2) For imported covered commodities that have subsequently undergone substantial transformation in the United States that are commingled with other imported covered commodities that have subsequently undergone substantial transformation in the United States (either prior to or following substantial transformation in the United States) and/or U.S. origin covered commodities, the declaration shall indicate the countries of origin contained therein or that may be contained therein.

(i) *Remotely Purchased Products.* For sales of a covered commodity in which the customer purchases a covered commodity prior to having an opportunity to observe the final package (e.g., Internet sales, home delivery sales, etc.), the retailer may provide the country of origin notification and method of production (wild and/or farm-raised) designation either on the sales vehicle or at the time the product is delivered to the consumer.

§ 60.300 Labeling.

(a) Country of origin declarations and method of production (wild and/or farm-raised) designations can either be in the form of a placard, sign, label, sticker, band, twist tie, pin tag, or other format that provides country of origin and method of production information. The country of origin declaration and method of production (wild and/or farm-raised) designation may be combined or made separately. Except as provided in § 60.200(g) and 60.200(h) of this regulation, the declaration of the country(ies) of origin of a product shall be listed according to applicable Federal legal requirements. Country of origin declarations may be in the form of a check box provided it is in conformance with other Federal legal requirements. Various forms of the production designation are acceptable, including ''wild caught'', ''wild'', ''farm-raised'', ''farmed'', or a combination of these terms for blended products that contain both wild and farm-raised fish or shellfish, provided it can be readily understood by the consumer and is in conformance with other Federal labeling laws. Designations such as ''ocean caught'', ''caught at sea'', ''line caught'', ''cultivated'', or ''cultured'' are not acceptable substitutes. Alternatively, method of production (wild and/or farm-raised) designations may be in the form of a check box.

(b) The declaration of the country(ies) of origin and method(s) of production (wild and/or farm-raised) (e.g., placard, sign, label, sticker, band, twist tie, pin tag, or other display) must be placed in a conspicuous location, so as to render it likely to be read and understood by a customer under normal conditions of purchase.

(c) The declaration of the country(ies) of origin and the method(s) of production (wild and/or farm-raised) may be typed, printed, or handwritten provided it is in conformance with other Federal labeling laws and does not obscure other labeling information required by other Federal regulations.

(d) A bulk container (e.g., display case, shipper, bin, carton, and barrel), used at the retail level to present product to consumers, may contain a covered commodity from more than one country of origin and/or more than one method of production (wild and farm-raised) provided all possible origins and/or methods of production are listed.

(e) In general, country abbreviations are not acceptable. Only those abbreviations approved for use under CBP rules, regulations, and policies, such as ''U.K.'' for ''The United Kingdom of Great Britain and Northern Ireland'', ''Luxemb'' for Luxembourg, and ''U.S. or USA'' for the ''United States'' are acceptable. The adjectival form of the name of a country may be used as proper notification of the country(ies) of origin of imported commodities provided the adjectival form of the name does not appear with other words so as to refer to a kind or species of product. Symbols or flags alone may not be used to denote country of origin.

(f) State or regional label designations are not acceptable in lieu of country of origin labeling.

Recordkeeping

§ 60.400 Recordkeeping requirements.

(a) *General.* (1) All records must be legible and may be maintained in either electronic or hard copy formats. Due to the variation in inventory and accounting documentary systems, various forms of documentation and records will be acceptable.

(2) Upon request by USDA representatives, suppliers and retailers subject to this subpart shall make available to USDA representatives, records maintained in the normal course of business that verify an origin claim and method of production (wild and/or farm-raised). Such records shall be provided within 5 business days of the request and may be maintained in any location.

(b) *Responsibilities of suppliers.* (1) Any person engaged in the business of supplying a covered commodity to a retailer, whether directly or indirectly, must make available information to the buyer about the country(ies) of origin and method(s) of production (wild and/or farm-raised), of the covered commodity. This information may be provided either on the product itself, on the master shipping container, or in a document that accompanies the product

through retail sale provided that it identifies the product and its country(ies) of origin and method(s) of production. In addition, the supplier of a covered commodity that is responsible for initiating a country(ies) of origin and method(s) of production (wild and/or farm-raised) claim must possess records that are necessary to substantiate that claim for a period of 1 year from the date of the transaction. Producer affidavits shall also be considered acceptable records that suppliers may utilize to initiate origin claims, provided it is made by someone having first-hand knowledge of the origin of the covered commodity and identifies the covered commodity unique to the transaction.

(2) Any intermediary supplier handling a covered commodity that is found to be designated incorrectly as to the country of origin and/or method of production (wild and/or farm-raised) shall not be held liable for a violation of the Act by reason of the conduct of another if the intermediary supplier relied on the designation provided by the initiating supplier or other intermediary supplier, unless the intermediary supplier willfully disregarded information establishing that the country of origin and/or method of production (wild and/or farm-raised) declaration was false.

(3) Any person engaged in the business of supplying a covered commodity to a retailer, whether directly or indirectly (i.e., including but not limited to harvesters, producers, distributors, handlers, and processors), must maintain records to establish and identify the immediate previous source (if applicable) and immediate subsequent recipient of a covered commodity for a period of 1 year from the date of the transaction.

(4) For an imported covered commodity (as defined in § 60.200(f)), the importer of record as determined by U.S. Customs and Border Protection, must ensure that records: provide clear product tracking from the port of entry into the United States to the immediate subsequent recipient and accurately reflect the country of origin and method of production (wild and/or farm-raised) of the item as identified in relevant CBP entry documents and information systems; and must maintain such records for a period of 1 year from the date of the transaction.

(c) *Responsibilities of retailers.* (1) In providing the country of origin and method of production (wild and/or farm-raised) notification for a covered commodity, in general, retailers are to convey the origin and method of production information provided to them by their suppliers. Only if the retailer physically commingles a covered commodity of different origins and/or methods of production in preparation for retail sale, whether in a consumer-ready package or in a bulk display (and not discretely packaged) (i.e., full service fish case), can the retailer initiate a multiple country of origin and/or method of production designation that reflects the actual countries of origin and method of production for the resulting covered commodity.

(2) Records and other documentary evidence relied upon at the point of sale to establish a covered commodity's country(ies) of origin and designation of wild and/or farm-raised must either be maintained at the retail facility or at another location for as long as the product is on hand and provided to any duly authorized representative of USDA in accordance with § 60.400(a)(2). For pre-labeled products, the label itself is sufficient information on which the retailer may rely to establish the product's origin and method(s) of production (wild and/or farm-raised) and no additional records documenting origin and method of production information are necessary.

(3) Records that identify the covered commodity, the retail supplier, and for products that are not pre-labeled, the country of origin information and the method(s) of production (wild and/or farm-raised) must be maintained for a period of 1 year from the date the declaration is made at retail.

(4) Any retailer handling a covered commodity that is found to be designated incorrectly as to the country of origin and/or the method of production (wild and/or farm-raised) shall not be held liable for a violation of the Act by reason of the conduct of another if the retailer relied on the designation provided by the supplier, unless the retailer willfully disregarded information establishing that the country of origin and/or method of production declaration was false.

Subpart B—[Reserved]

■ 2. Part 65 is revised to read as follows:

PART 65—COUNTRY OF ORIGIN LABELING OF BEEF, PORK, LAMB, CHICKEN, GOAT MEAT, PERISHABLE AGRICULTURAL COMMODITIES, MACADAMIA NUTS, PECANS, PEANUTS, AND GINSENG

Subpart A—General Provisions

Definitions

65.100 Act.
65.105 AMS.
65.110 Beef.
65.115 Born.
65.120 Chicken.
65.125 Commingled covered commodities.
65.130 Consumer package.
65.135 Covered commodity.
65.140 Food service establishment.
65.145 Ginseng.
65.150 Goat.
65.155 Ground beef.
65.160 Ground chicken.
65.165 Ground goat.
65.170 Ground lamb.
65.175 Ground pork.
65.180 Imported for immediate slaughter.
65.185 Ingredient.
65.190 Lamb.
65.195 Legibly.
65.205 Perishable agricultural commodity.
65.210 Person.
65.215 Pork.
65.218 Pre-labeled.
65.220 Processed food item.
65.225 Produced.
65.230 Production step.
65.235 Raised.
65.240 Retailer.
65.245 Secretary.
65.250 Slaughter.
65.255 United States.
65.260 United States country of origin.
65.265 USDA.

Country of Origin Notification

65.300 Country of origin notification.
65.400 Labeling.

Recordkeeping

65.500 Recordkeeping requirements.

Subpart B—[Reserved]

Authority: 7 U.S.C. 1621 *et seq.*

Subpart A—General Provisions

Definitions

§ 65.100 Act.

Act means the Agricultural Marketing Act of 1946, (7 U.S.C. 1621 *et seq.*).

§ 65.105 AMS.

AMS means the Agricultural Marketing Service, United States Department of Agriculture.

§ 65.110 Beef.

Beef means meat produced from cattle, including veal.

§ 65.115 Born.

Born in the case of chicken means hatched from the egg.

§ 65.120 Chicken.

Chicken has the meaning given the term in 9 CFR 381.170(a)(1).

§ 65.125 Commingled covered commodities.

Commingled covered commodities means covered commodities (of the same type) presented for retail sale in a consumer package that have been prepared from raw material sources having different origins.

§ 65.130 Consumer package.

Consumer package means any container or wrapping in which a covered commodity is enclosed for the delivery and/or display of such commodity to retail purchasers.

§ 65.135 Covered commodity.

(a) *Covered commodity* means:

(1) Muscle cuts of beef, lamb, chicken, goat, and pork;

(2) Ground beef, ground lamb, ground chicken, ground goat, and ground pork;

(3) Perishable agricultural commodities;

(4) Peanuts;

(5) Macadamia nuts;

(6) Pecans; and

(7) Ginseng.

(b) Covered commodities are excluded from this part if the commodity is an ingredient in a processed food item as defined in § 65.220.

§ 65.140 Food service establishment.

Food service establishment means a restaurant, cafeteria, lunch room, food stand, saloon, tavern, bar, lounge, or other similar facility operated as an enterprise engaged in the business of selling food to the public. Similar food service facilities include salad bars, delicatessens, and other food enterprises located within retail establishments that provide ready-to-eat foods that are consumed either on or outside of the retailer's premises.

§ 65.145 Ginseng.

Ginseng means ginseng root of the genus Panax.

§ 65.150 Goat.

Goat means meat produced from goats.

§ 65.155 Ground beef.

Ground beef has the meaning given that term in 9 CFR 319.15(a), i.e., chopped fresh and/or frozen beef with or without seasoning and without the addition of beef fat as such, and containing no more than 30 percent fat, and containing no added water, phosphates, binders, or extenders, and also includes products defined by the term ''hamburger'' in 9 CFR 319.15(b).

§ 65.160 Ground chicken.

Ground chicken means comminuted chicken of skeletal origin that is produced in conformance with all applicable Food Safety and Inspection Service labeling guidelines.

§ 65.165 Ground goat.

Ground goat means comminuted goat of skeletal origin that is produced in conformance with all applicable Food Safety and Inspection Service labeling guidelines.

§ 65.170 Ground lamb.

Ground lamb means comminuted lamb of skeletal origin that is produced in conformance with all applicable Food Safety and Inspection Service labeling guidelines.

§ 65.175 Ground pork.

Ground pork means comminuted pork of skeletal origin that is produced in conformance with all applicable Food Safety and Inspection Service labeling guidelines.

§ 65.180 Imported for immediate slaughter.

Imported for immediate slaughter means imported into the United States for ''immediate slaughter'' as that term is defined in 9 CFR 93.400, i.e., consignment directly from the port of entry to a recognized slaughtering establishment and slaughtered within 2 weeks from the date of entry.

§ 65.185 Ingredient.

Ingredient means a component either in part or in full, of a finished retail food product.

§ 65.190 Lamb.

Lamb means meat produced from sheep.

§ 65.195 Legible.

Legible means text that can be easily read.

§ 65.205 Perishable agricultural commodity.

Perishable agricultural commodity means fresh and frozen fruits and vegetables of every kind and character that have not been manufactured into articles of a different kind or character and includes cherries in brine as defined by the Secretary in accordance with trade usages.

§ 65.210 Person.

Person means any individual, partnership, corporation, association, or other legal entity.

§ 65.215 Pork.

Pork means meat produced from hogs.

§ 65.218 Pre-labeled.

Pre-labeled means a covered commodity that has the commodity's country of origin and the name and place of business of the manufacturer, packer, or distributor on the covered commodity itself, on the package in which it is sold to the consumer, or on the master shipping container. The place of business information must include at a minimum the city and state or other acceptable locale designation.

§ 65.220 Processed food item.

Processed food item means a retail item derived from a covered commodity that has undergone specific processing resulting in a change in the character of the covered commodity, or that has been combined with at least one other covered commodity or other substantive food component (e.g., chocolate, breading, tomato sauce), except that the addition of a component (such as water, salt, or sugar) that enhances or represents a further step in the preparation of the product for consumption, would not in itself result in a processed food item. Specific processing that results in a change in the character of the covered commodity includes cooking (e.g., frying, broiling, grilling, boiling, steaming, baking, roasting), curing (e.g., salt curing, sugar curing, drying), smoking (hot or cold), and restructuring (e.g., emulsifying and extruding). Examples of items excluded include teriyaki flavored pork loin, roasted peanuts, breaded chicken tenders, and fruit medley.

§ 65.225 Produced.

Produced in the case of a perishable agricultural commodity, peanuts, ginseng, pecans, and macadamia nuts means harvested.

§ 65.230 Production step.

Production step means, in the case of beef, pork, goat, chicken, and lamb, born, raised, or slaughtered.

§ 65.235 Raised.

Raised means, in the case of beef, pork, chicken, goat, and lamb, the period of time from birth until slaughter or in the case of animals imported for immediate slaughter as defined in § 65.180, the period of time from birth until date of entry into the United States.

§ 65.240 Retailer.

Retailer means any person licensed as a retailer under the Perishable Agricultural Commodities Act of 1930 (7 U.S.C. 499a(b)).

§ 65.245 Secretary.

Secretary means the Secretary of Agriculture of the United States or any person to whom the Secretary's authority has been delegated.

§ 65.250 Slaughter.

Slaughter means the point in which a livestock animal (including chicken) is prepared into meat products (covered commodities) for human consumption. For purposes of labeling under this part, the word harvested may be used in lieu of slaughtered.

§ 65.255 United States.

United States means the 50 States, the District of Columbia, the Commonwealth of Puerto Rico, the U.S. Virgin Islands, American Samoa, Guam, the Northern Mariana Islands, and any other Commonwealth, territory, or possession of the United States.

§ 65.260 United States country of origin.

United States country of origin means in the case of:

(a) Beef, pork, lamb, chicken, and goat:

(1) From animals exclusively born, raised, and slaughtered in the United States;

(2) From animals born and raised in Alaska or Hawaii and transported for a period of not more than 60 days through Canada to the United States and slaughtered in the United States; or

(3) From animals present in the United States on or before July 15, 2008, and once present in the United States, remained continuously in the United States.

(b) Perishable agricultural commodities, peanuts, ginseng, pecans, and macadamia nuts: from products produced in the United States.

§ 65.265 USDA.

USDA means the United States Department of Agriculture.

Country of Origin Notification

§ 65.300 Country of origin notification.

In providing notice of the country of origin as required by the Act, the following requirements shall be followed by retailers:

(a) *General.* Labeling of covered commodities offered for sale whether individually, in a bulk bin, carton, crate, barrel, cluster, or consumer package must contain country of origin as set forth in this regulation.

(b) *Exemptions.* Food service establishments as defined in § 65.135 are exempt from labeling under this subpart.

(c) *Exclusions.* A covered commodity is excluded from this subpart if it is an ingredient in a processed food item as defined in § 65.220.

(d) *Labeling Covered Commodities of United States Origin.* A covered commodity may bear a declaration that identifies the United States as the sole country of origin at retail only if it meets the definition of United States country of origin as defined in § 65.260.

(e) *Labeling Muscle Cut Covered Commodities of Multiple Countries of Origin that include the United States.* (1) For muscle cut covered commodities derived from animals that were born in Country X or (as applicable) Country Y, raised and slaughtered in the United States, and were not derived from animals imported for immediate slaughter as defined in § 65.180, the origin may be designated as Product of the United States, Country X, and (as applicable) Country Y.

(2) For muscle cut covered commodities derived from animals born, raised, and slaughtered in the U.S. that are commingled during a production day with muscle cut covered commodities described in § 65.300(e)(1), the origin may be designated as Product of the United States, Country X, and (as applicable) Country Y.

(3) If an animal was imported into the United States for immediate slaughter as defined in § 65.180, the origin of the resulting meat products derived from that animal shall be designated as Product of Country X and the United States.

(4) For muscle cut covered commodities derived from animals that are born in Country X or Country Y, raised and slaughtered in the United States, that are commingled during a production day with muscle cut covered commodities that are derived from animals that are imported into the United States for immediate slaughter as defined in § 65.180, the origin may be designated as Product of the United States, Country X, and (as applicable) Country Y. In each case of paragraphs (e)(1), (e)(2), and (e)(4) of this section, the countries may be listed in any order. In addition, the origin declaration may include more specific information related to production steps provided records to substantiate the claims are maintained and the claim is consistent with other applicable Federal legal requirements.

(f) *Labeling Imported Covered Commodities.* Imported covered commodities for which origin has already been established as defined by this law (e.g., born, raised, and slaughtered or produced) and for which no production steps have occurred in the United States, shall retain their origin, as declared to U.S. Customs and Border Protection at the time the product entered the United States, through retail sale.

(g) *Labeling Commingled Covered Commodities.* In the case of perishable agricultural commodities; peanuts; pecans; ginseng; and macadamia nuts: For imported covered commodities that have not subsequently been substantially transformed in the United States that are commingled with covered commodities sourced from a different origin that have not been substantially transformed (as established by CBP) in the United States, and/or covered commodities of United States origin, the declaration shall indicate the countries of origin in accordance with existing Federal legal requirements.

(h) *Labeling Ground Beef, Ground Pork, Ground Lamb, Ground Goat, and Ground Chicken.* The declaration for ground beef, ground pork, ground lamb, ground goat, and ground chicken covered commodities shall list all countries of origin contained therein or that may be reasonably contained therein. In determining what is considered reasonable, when a raw material from a specific origin is not in a processor's inventory for more than 60 days, that country shall no longer be included as a possible country of origin.

(i) *Remotely Purchased Products.* For sales of a covered commodity in which the customer purchases a covered commodity prior to having an opportunity to observe the final package (e.g., Internet sales, home delivery sales, etc.), the retailer may provide the country of origin notification either on the sales vehicle or at the time the product is delivered to the consumer.

§ 65.400 Labeling.

(a) Country of origin declarations can either be in the form of a placard, sign, label, sticker, band, twist tie, pin tag, or other format that allows consumers to identify the country of origin. The declaration of the country of origin of a product may be in the form of a statement such as ''Product of USA,'' ''Produce of the USA'', or ''Grown in Mexico,'' may only contain the name of the country such as ''USA'' or ''Mexico,'' or may be in the form of a check box provided it is in conformance with other Federal labeling laws.

(b) The declaration of the country of origin (e.g., placard, sign, label, sticker, band, twist tie, pin tag, or other display) must be legible and placed in a conspicuous location, so as to render it likely to be read and understood by a customer under normal conditions of purchase.

(c) The declaration of country of origin may be typed, printed, or handwritten provided it is in conformance with other Federal labeling laws and does not obscure other labeling information required by other Federal regulations.

(d) A bulk container (e.g., display case, shipper, bin, carton, and barrel) used at the retail level to present product to consumers, may contain a covered commodity from more than one country of origin provided all possible origins are listed.

(e) In general, country abbreviations are not acceptable. Only those

abbreviations approved for use under Customs and Border Protection rules, regulations, and policies, such as ''U.K.'' for ''The United Kingdom of Great Britain and Northern Ireland'', ''Luxemb'' for Luxembourg, and ''U.S. or USA'' for the ''United States of America'' are acceptable. The adjectival form of the name of a country may be used as proper notification of the country of origin of imported commodities provided the adjectival form of the name does not appear with other words so as to refer to a kind or species of product. Symbols or flags alone may not be used to denote country of origin.

(f) Domestic and imported perishable agricultural commodities, peanuts, pecans, macadamia nuts, and ginseng may use State, regional, or locality label designations in lieu of country of origin labeling. Abbreviations may be used for state, regional, or locality label designations for these commodities whether domestically harvested or imported using official United States Postal Service abbreviations or other abbreviations approved by CBP.

Recordkeeping

§ 65.500 Recordkeeping requirements.

(a) *General.* (1) All records must be legible and may be maintained in either electronic or hard copy formats. Due to the variation in inventory and accounting documentary systems, various forms of documentation and records will be acceptable.

(2) Upon request by USDA representatives, suppliers and retailers subject to this subpart shall make available to USDA representatives, records maintained in the normal course of business that verify an origin claim. Such records shall be provided within 5 business days of the request and may be maintained in any location.

(b) *Responsibilities of suppliers.* (1) Any person engaged in the business of supplying a covered commodity to a retailer, whether directly or indirectly, must make available information to the buyer about the country(ies) of origin of the covered commodity. This information may be provided either on the product itself, on the master shipping container, or in a document that accompanies the product through retail sale. In addition, the supplier of a covered commodity that is responsible for initiating a country(ies) of origin claim, which in the case of beef, lamb, chicken, goat, and pork is the slaughter facility, must possess records that are necessary to substantiate that claim for a period of 1 year from the date of the transaction. For that purpose, packers that slaughter animals that are tagged with an 840 Animal Identification Number device without the presence of any additional accompanying marking (i.e., ''CAN'' or ''M'') may use that information as a basis for a U.S. origin claim. Packers that slaughter animals that are part of another country's recognized official system (e.g., Canadian official system, Mexico official system) may also rely on the presence of an official ear tag or other approved device on which to base their origin claims. Producer affidavits shall also be considered acceptable records that suppliers may utilize to initiate origin claims, provided it is made by someone having first-hand knowledge of the origin of the covered commodity and identifies the covered commodity unique to the transaction. In the case of cattle, producer affidavits may be based on a visual inspection of the animal to verify its origin. If no markings are found that would indicate that the animal is of foreign origin (i.e., ''CAN'' or ''M''), the animal may be considered to be of U.S. origin.

(2) Any intermediary supplier handling a covered commodity that is found to be designated incorrectly as to the country of origin shall not be held liable for a violation of the Act by reason of the conduct of another if the intermediary supplier relied on the designation provided by the initiating supplier or other intermediary supplier, unless the intermediary supplier willfully disregarded information establishing that the country of origin declaration was false.

(3) Any person engaged in the business of supplying a covered commodity to a retailer, whether directly or indirectly (i.e., including but not limited to growers, distributors, handlers, packers, and processors), must maintain records to establish and identify the immediate previous source (if applicable) and immediate subsequent recipient of a covered commodity for a period of 1 year from the date of the transaction.

(4) For an imported covered commodity (as defined in § 65.300(f)), the importer of record as determined by CBP, must ensure that records: provide clear product tracking from the port of entry into the United States to the immediate subsequent recipient and accurately reflect the country of origin of the item as identified in relevant CBP entry documents and information systems; and must maintain such records for a period of 1 year from the date of the transaction.

(c) *Responsibilities of retailers.* (1) In providing the country of origin notification for a covered commodity, in general, retailers are to convey the origin information provided by their suppliers. Only if the retailer physically commingles a covered commodity of different origins in preparation for retail sale, whether in a consumer-ready package or in a bulk display (and not discretely packaged) (i.e., full service meat case), can the retailer initiate a multiple country of origin designation that reflects the actual countries of origin for the resulting covered commodity.

(2) Records and other documentary evidence relied upon at the point of sale to establish a covered commodity's country(ies) of origin must either be maintained at the retail facility or at another location for as long as the product is on hand and provided to any duly authorized representative of USDA in accordance with § 65.500(a)(2). For pre-labeled products, the label itself is sufficient information on which the retailer may rely to establish the product's origin and no additional records documenting origin information are necessary.

(3) Any retailer handling a covered commodity that is found to be designated incorrectly as to the country of origin shall not be held liable for a violation of the Act by reason of the conduct of another if the retailer relied on the designation provided by the supplier, unless the retailer willfully disregarded information establishing that the country of origin declaration was false.

(4) Records that identify the covered commodity, the retail supplier, and for products that are not pre-labeled, the country of origin information must be maintained for a period of 1 year from the date the origin declaration is made at retail.

Subpart B—[Reserved]

Dated: January 9, 2009.

James E. Link,

Administrator, Agricultural Marketing Service.

[FR Doc. E9–600 Filed 1–12–09; 11:15 am]

BILLING CODE 3410–02–P

Federal Register

Thursday,
January 15, 2009

Part III

Department of Defense
General Services Administration
National Aeronautics and Space Administration

48 CFR Parts 2, 3, 12 et al.

Federal Acquisition Regulation; Final Rules and Small Entity Compliance Guide

DEPARTMENT OF DEFENSE

GENERAL SERVICES ADMINISTRATION

NATIONAL AERONAUTICS AND SPACE ADMINISTRATION

48 CFR Chapter 1

[Docket FAR 2009–0012, Sequence 1]

Federal Acquisition Regulation; Federal Acquisition Circular 2005–30; Introduction

AGENCIES: Department of Defense (DoD), General Services Administration (GSA), and National Aeronautics and Space Administration (NASA).

ACTION: Summary presentation of rules.

SUMMARY: This document summarizes the Federal Acquisition Regulation (FAR) rules agreed to by the Civilian Agency Acquisition Council and the Defense Acquisition Regulations Council in this Federal Acquisition Circular (FAC) 2005–30. A companion document, the Small Entity Compliance Guide (SECG), follows this FAC. The FAC, including the SECG, is available via the Internet at *http://www.regulations.gov*.

DATES: For effective dates and comment dates, see separate documents, which follow.

FOR FURTHER INFORMATION CONTACT: The analyst whose name appears in the table below in relation to each FAR case. Please cite FAC 2005–30 and the specific FAR case numbers. For information pertaining to status or publication schedules, contact the FAR Secretariat at (202) 501–4755.

LIST OF RULES IN FAC 2005–30

Item	Subject	FAR case	Analyst
I	Federal Procurement Data System (FPDS)	2004–038	Woodson.
II	Commercially Available Off-the-Shelf (COTS) Items	2000–305	Jackson.
III	Exemption of Certain Service Contracts from the Service Contract Act (SCA)	2001–004	Woodson.
IV	Public Disclosure of Justification and Approval Documents for NoncompetitiveContracts-Section 844 of the National Defense AuthorizationAct for Fiscal Year 2008 (Interim).	2008–003	Woodson.
V	SAFETY Act: Implementation of DHS Regulations	2006–023	Chambers.
VI	Electronic Products Environmental Assessment Tool (EPEAT)	2006–030	Clark.
VII	Combating Trafficking in Persons	2005–012	Woodson.
VIII	Trade Agreements—New Thresholds	2007–016	Murphy.
IX	Technical Amendment		

SUPPLEMENTARY INFORMATION: Summaries for each FAR rule follow. For the actual revisions and/or amendments to these FAR cases, refer to the specific item number and subject set forth in the documents following these item summaries.

FAC 2005–30 amends the FAR as specified below:

Item I—Federal Procurement Data System (FPDS) (FAR Case 2004–038)

This final rule amends the Federal Acquisition Regulation (FAR) Subpart 4.6 to revise the process for reporting contract actions to the Federal Procurement Data System (FPDS). The rule establishes FPDS as the single authoritative source of all procurement data for a host of applications and reports, such as the Central Contractor Registration (CCR), the Electronic Subcontracting Reporting System (eSRS), the Small Business Goaling Report (SRGR), and Resource Conservation and Recovery Act (RCRA) data. The rule requires Contracting Officers to verify the accuracy of contract award data prior to reporting the data in FPDS. The rule does not require any reporting by the vendor community, as the FPDS reporting requirement is accomplished by Government contracting activities.

Item II—Commercially Available Off-the-Shelf (COTS) Items (FAR Case 2000–305)

This final rule amends the Federal Acquisition Regulation (FAR) to implement Section 4203 of the Clinger-Cohen Act of 1996 (41 U.S.C. 431) with respect to the inapplicability of certain laws to contracts and subcontracts for the acquisition of commercially available off-the-shelf (COTS) items. A new FAR section 12.103 outlines the treatment of COTS items. This rule will reduce the burden on contractors that provide commercially available off-the-shelf EPA-designated products that contain recovered materials and contractors that provide construction material or end products that are COTS items manufactured in the United States. Contracting officers will need to become acquainted with the new definition of ''commercially available off-the-shelf item'' and understand the revised definitions of ''domestic end product'' and ''domestic construction material.''

Item III—Exemption of Certain Service Contracts from the Service Contract Act (SCA). (FAR Case 2001–004)

This rule finalizes, with changes, the interim rule that was published in the **Federal Register** at 72 FR 63076 on November 7, 2007. This rule is required to implement the U.S. Department of Labor's final rule published in the **Federal Register** at 66 FR 5327 on January 18, 2001, amending 29 CFR Part 4. This rule revises the current Service Contract Act (SCA) exemption in the FAR and adds an SCA exemption for contracts for certain additional services that meet specific criteria. The rule also adds to the Annual Representations and Certifications FAR clause at 52.204–8, the conditions under which each listed provision applies, or for the more complex cases, a check-off for the contracting officer to indicate whether the provision is applicable to the solicitation. The rule encourages broader participation of Government procurement by companies doing business in the commercial sector, and reinforces the Government's commitment to reduce Government-unique terms and conditions, without compromising the purpose of the SCA to protect prevailing labor standards.

Item IV—Public Disclosure of Justification and Approval Documents for Noncompetitive Contracts-Section 844 of the National Defense Authorization Act for Fiscal Year 2008 (Interim) (FAR Case 2008–003)

This interim rule amends FAR 6.305 to require agencies to make available for public inspection within 14 days after contract award the justification required

by 6.303–1, on the website of the agency and at the Governmentwide Point of Entry (*www.fedbizopps.gov*). In the case of a contract award permitted under FAR 6.302–2, the rule requires that the justification be posted within 30 days after contract award. The rule requires that contracting officers shall carefully screen all justifications for contractor proprietary data and remove all such data, and such references and citations as are necessary to protect the proprietary data, before making the justifications available for public inspection. This rule implements Section 844 of the National Defense Authorization Act for Fiscal Year 2008.

Item V—SAFETY Act: Implementation of DHS Regulations (FAR Case 2006–023)

This final rule converts the interim rule published in the **Federal Register** at 72 FR 63027, November 7, 2007 to a final rule with changes. This final rule implements the SAFETY Act in the FAR. The SAFETY Act provides incentives for the development and deployment of anti-terrorism technologies by creating a system of ''risk management'' and a system of ''litigation management.'' The purpose of the SAFETY Act is to ensure that the threat of liability does not deter potential manufacturers or sellers of antiterrorism technologies from developing, deploying, and commercializing technologies that could save lives. Examples of Qualified Anti-Terrorism Technologies (QATT) identified by DHS include—

- Vulnerability assessment and countermeasure and counter-terrorism planning tools;
- First responder interoperability solution;
- Marine traffic management system;
- Security services, guidelines, systems, and standards;
- Vehicle and cargo inspection system;
- X-ray inspection system;
- Trace explosives detection systems and associated support services;
- Maintenance and repair of screening equipment;
- Risk assessment platform;
- Explosive and weapon detection equipment and services;
- Biological detection and filtration systems;
- Passenger screening services;
- Baggage screening services;
- Chemical, biological, or radiological agent release detectors;
- Vehicle barriers;
- First responder equipment; and
- Architectural and engineering ''hardening'' products and services.

Item VI—Electronic Products Environmental Assessment Tool (EPEAT) (FAR Case 2006–030)

The Civilian Agency Acquisition Council and the Defense Acquisition Regulations Council (Councils) have adopted as final, without change, the interim rule that amended the Federal Acquisition Regulation (FAR) to require use of the Electronic Products Environmental Assessment Tool (EPEAT) when acquiring personal computer products such as desktops, notebooks (also known as laptops), and monitors pursuant to the Energy Policy Act of 2005 and Executive Order 13423, ''Strengthening Federal Environmental, Energy, and Transportation Management.'' The interim rule revised Subpart 23.7, and prescribed a clause at 52.223–16 (also included in 52.212–5 for acquisition of commercial items) in all solicitations and contracts for the acquisition of personal computer products, services that require furnishing of personal computer products for use by the Government, and services for contractor operation of Government owned facilities.

Item VII—Combating Trafficking in Persons (FAR Case 2005–012)

This final rule implements Section 3(b) of the Trafficking Victims Protection Reauthorization Act (TVPRA) of 2003 (Combating Trafficking In Persons). TVPRA addresses the victimization of countless men, women, and children in the United States and abroad. The United States Government believes that its contractors can help combat trafficking in persons. The statute, codified at 22 U.S.C. 7104(g), requires that contracts contain a clause allowing the agency to terminate the contract if a contractor, contractor employees, subcontractor, or subcontractor employees engage in severe forms of trafficking in persons or procures a commercial sex act during the period of performance of the contract, or uses forced labor in the performance of the contract. The rule provides that the contracting officer may consider whether the contractor had a Trafficking in Persons awareness program at the time of a violation as a mitigating factor when determining remedies; and a website where the contractor may obtain additional information about Trafficking in Persons and examples of awareness programs.

Item VIII—Trade Agreements—New Thresholds (FAR Case 2007–016)

This final rule converts the interim rule published in the **Federal Register** at 73 FR 10962 on February 28, 2008, and amended at 73 FR 16747 on March 28, 2008, to a final rule without change.

The rule adjusts the thresholds for application of the World Trade Organization Government Procurement Agreement and the Free Trade Agreements as determined by the United States Trade Representative, according to a formula set forth in the agreements.

Item IX—Technical Amendment

An editorial change is made at FAR 15.101–2.

Dated: December 24, 2008.

Edward Loeb,

Acting Director, Office of Acquisition Policy.

Federal Acquisition Circular

Federal Acquisition Circular (FAC) 2005-30 is issued under the authority of the Secretary of Defense, the Administrator of General Services, and the Administrator for the National Aeronautics and Space Administration.

Unless otherwise specified, all Federal Acquisition Regulation (FAR) and other directive material contained in FAC 2005-30 is effective February 17, 2009, except for Items VIII and IX, which are effective **January 15, 2009**.

Dated: December 22, 2008.

Shay D. Assad,

Director, Defense Procurement.

Dated: December 24, 2008.

David A. Drabkin,

Senior Procurement Executive & Deputy Chief Acquisition Officer, Office of the Chief Acquisition Officer, U.S. General Services Administration.

Dated: December 22, 2008.

William P. McNally,

Assistant Administrator for Procurement, National Aeronautics and Space Administration.

[FR Doc. E9–553 Filed 1–14–09; 8:45 am]

BILLING CODE 6820–EP–S

DEPARTMENT OF DEFENSE

GENERAL SERVICES ADMINISTRATION

NATIONAL AERONAUTICS AND SPACE ADMINISTRATION

48 CFR Parts 1, 2, 4, 12, and 52

[FAC 2005–30; FAR Case 2004–038, Item I;Docket 2008–0001; Sequence 6]

RIN 9000–AK94

Federal Acquisition Regulation; FAR Case 2004–038, Federal Procurement Data System (FPDS)

AGENCIES: Department of Defense (DoD), General Services Administration (GSA), and National Aeronautics and Space Administration (NASA).

ACTION: Final rule.

SUMMARY: The Civilian Agency Acquisition Council and the Defense Acquisition Regulations Council (Councils) have adopted as final, with one minor change, the interim rule amending the Federal Acquisition Regulation (FAR) to revise the process for reporting contract actions to the Federal Procurement Data System (FPDS). This final rule revises the definition of indefinite delivery vehicle at FAR 4.601.

DATES: *Effective Date*: February 17, 2009.

FOR FURTHER INFORMATION CONTACT: Mr. Ernest Woodson, Procurement Analyst, at (202) 501–3775 for clarification of content. For information pertaining to status or publication schedules, contact the FAR Secretariat at (202) 501–4755. Please cite FAC 2005–30, FAR case 2004–038.

SUPPLEMENTARY INFORMATION:

A. Background

As of October 2003, all agencies were to begin reporting FAR-based contract actions to the modified system. During Fiscal Year 2004, members of the interagency Change Control Board, as well as departmental teams working on the migration of data from the old to new system, recognized both the opportunity to standardize reporting processes and the need to revise the FAR to provide current and clear reporting requirements.

DoD, GSA, and NASA published an interim rule in the **Federal Register** at 73 FR 21773, on April 22, 2008. The interim rule established the Government's commitment for Federal Procurement Data System (FPDS) data to serve as the single authoritative source of all procurement data for a host of applications and reports, such as the Central Contractor Registration (CCR), the Electronic Subcontracting Reporting System (eSRS), the Small Business Goaling Report (SBGR), and Resource Conservation and Recovery Act (RCRA) data. The public comment period closed on June 23, 2008. Four respondents submitted comments on the interim rule. A discussion of the comments and the changes made to the rule as a result of those comments are provided below:

1. One respondent commented that FAR 4.602(a) through (c) contains little value for a reader consulting the FAR for guidance on what to do and when or how to do it. The respondent recommends deleting 4.602 and renumbering remaining paragraphs.

Response: The Councils disagree with the comment. FAR section 4.602 was added to provide general information about contract reporting. The section identifies FPDS as the Government's web-based tool for reporting contract actions. In addition, it provides a list of the many uses of the data provided by FPDS and cites the FPDS web site. The Councils consider this type of information to be very useful for the acquisition community and indicates the degree of importance placed on reporting contract actions. Language regarding procedures and reporting actions (what to do and when or how to do it) may be found at FAR 4.605 and 4.606. Therefore, FAR 4.602 remains unchanged.

2. One respondent commented that FAR 4.603(a) seemed to be needless and out of place. FPDS preceded Federal Funding and Transparency Act of 2006 (FFATA) by many years and does not meet the public access requirements articulated in FFATA. The respondent recommends deleting this section and renumbering remaining subparagraphs.

Response: The Councils disagree with the comment. FAR 4.603(a) is a Federal contract policy statement indicating that the FFATA requires that all Federal award data must be publicly accessible. FPDS data is made accessible to the public, satisfying the certain basic requirements of FFATA. Therefore, this paragraph remains unchanged.

3. One respondent stated that FAR 4.601 defines indefinite delivery vehicle (IDV). Since IDV is more encompassing than an indefinite delivery contract (IDC), the respondent recommends finding another word for ''vehicle'' or changing the definition to read ''Indefinite delivery vehicle (IDV) means an indefinite delivery contract or agreement that has one or more…''

Response: The Councils agree that the definition should be clarified. As indicated at FAR 4.606(a)(ii), examples of IDVs, for the purposes of the FPDS, include task and delivery order contracts (including Governmentwide acquisition contracts and multi-agency contracts), GSA Federal supply schedules, Blanket Purchase Agreements, Basic Ordering Agreements, or any other agreement or contract against which individual orders or purchases may be placed. Accordingly, the Councils revised the definition of ''Indefinite delivery vehicle (IDV)'' at FAR 4.601 to include the words ''or agreement.''

4. One respondent recommends that references to generic DUNS be removed from FAR 4.605(b)(1) and (2). To prevent generic DUNS abuse, the FPDS Change Control Board voted to not post generic DUNS on the FPDS website. Each Agency would be responsible for communicating what generic DUNS, if any, should be used.

Response: The Councils disagree with the comment. The Councils understand agencies responsibilities associated with deciding which generic DUNS number to use, however, a DUNS number is required to complete a contract action report in FPDS. FAR procedures at 4.605(b) permit the use of generic DUNS numbers and do not interfere with agency responsibilities, as agreed to by the FPDS Change Control Board. A generic DUNS number may be used under the circumstances referenced at FAR 4.605(b)(1). FAR procedures at 4.605(b) remain unchanged.

5. One respondent submitted a comment in reference to FAR Case 2005–040, Electronic Subcontracting Reporting System (eSRS).

Response: This comment is not relevant to FAR Case 2004–038 and was referred to the FAR Small Business Team for disposition.

6. One respondent submitted a comment in reference to the **Federal Register** notice, Background, paragraph 5, stating that reporting only the appropriated portions of contract actions would be extremely impractical and result in data mismatches between automated contracting writing systems and FPDS. The respondent indicated that they have many actions that have mixed funding and it would be difficult for contracting staff to identify whether funding was appropriated or non-appropriated. In order to comply with the rule, data would have to be manually entered into FPDS.

Response: The Councils disagree with the comment. FAR 4.606(b)(2) states that agencies may submit actions for any non-appropriated fund (NAF) or NAF portion of a contract action using a mix of appropriated and non-appropriated funding, after contacting the FPDS

Program Office. It should be noted that reporting non-appropriated funds may impact certain reports generated using FPDS data regarding appropriated funds. FAR language remains unchanged.

This is not a significant regulatory action and, therefore, was not subject to review under Section 6(b) of Executive Order 12866, Regulatory Planning and Review, dated September 30, 1993. This rule is not a major rule under 5 U.S.C. 804.

B. Regulatory Flexibility Act

The Department of Defense, the General Services Administration, and the National Aeronautics and Space Administration certify that this final rule will not have a significant economic impact on a substantial number of small entities within the meaning of the Regulatory Flexibility Act, 5 U.S.C. 601, *et seq.*, because contract reporting is not accomplished by the vendor community, only by Government contracting entities.

C. Paperwork Reduction Act

The Paperwork Reduction Act does not apply because the changes to the FAR do not impose information collection requirements that require the approval of the Office of Management and Budget under 44 U.S.C. 3501, *et seq.*

List of Subjects in 48 CFR Parts 1, 2, 4, 12, and 52

Government procurement.

Dated: December 24, 2008

Edward Loeb,

Acting Director, Office of Acquisition Policy.

■ Accordingly, DoD, GSA, and NASA adopt the interim rule amending 48 CFR parts 1, 2, 4, 12, and 52, which was published in the **Federal Register** at 73 FR 21773, April 22, 2008, as a final rule with the following change:

PART 4—ADMINISTRATIVE MATTERS

■ 1. The authority citation for 48 CFR part 4 continues to read as follows:

Authority: 40 U.S.C. 121(c); 10 U.S.C. chapter 137; and 42 U.S.C. 2473(c).

4.601 [Amended]

■ 2. Amend section 4.601 by removing from the introductory paragraph of the definition ''Indefinite delivery vehicle (IDV)'' the word ''contract'' and adding ''contract or agreement'' in its place.

[FR Doc. E9–556 Filed 1–14–09; 8:45 am]

BILLING CODE 6820–EP–S

DEPARTMENT OF DEFENSE

GENERAL SERVICES ADMINISTRATION

NATIONAL AERONAUTICS AND SPACE ADMINISTRATION

48 CFR Parts 2, 3, 12, 23, 25, and 52

[FAC 2005–30; FAR Case 2000–305; Item II; Docket 2009-0001; Sequence 1]

RIN 9000–AJ55

Federal Acquisition Regulation; FAR Case 2000–305, Commercially Available Off-the-Shelf (COTS) Items

AGENCIES: Department of Defense (DoD), General Services Administration (GSA), and National Aeronautics and Space Administration (NASA).

ACTION: Final rule.

SUMMARY: The Civilian Agency Acquisition Council and the Defense Acquisition Regulations Council (Councils) have agreed on a final rule amending the Federal Acquisition Regulation (FAR) to implement Section 4203 of the Clinger-Cohen Act of 1996 (41 U.S.C. 431) (the Act) with respect to the inapplicability of certain laws to contracts and subcontracts for the acquisition of commercially available off-the-shelf (COTS) items.

DATES: *Effective Date*: February 17, 2009.

FOR FURTHER INFORMATION CONTACT: Mr. Michael Jackson, Procurement Analyst, at (202) 208–4949 for clarification of content. For information pertaining to status or publication schedules, contact the FAR Secretariat at (202) 501–4755. Please cite FAC 2005–30, FAR case 2000–305.

SUPPLEMENTARY INFORMATION:

A. Background

Section 35 of the Office of Federal Procurement Policy (OFPP) Act (41 U.S.C. 431) requires that the Federal Acquisition Regulation (FAR) include a list of provisions of law that are inapplicable to contracts for the acquisition of commercially available off-the-shelf (COTS) items. Certain laws cannot be exempt from the acquisition of COTS and they include laws that—

• Provide for criminal or civil penalties;

• Specifically refer to 41 U.S.C. 431 and the laws state that it applies to COTS;

• Provide for a bid protest procedure or small business preference listed at 41 U.S.C. 431(a)(3); or

• Are applicable because the Administrator of OFPP makes a written determination that it would not be in the best interest of the United States to exempt such COTS contracts from the applicability of the laws.

In order to implement section 4203 of the Clinger-Cohen Act of 1996, DoD, GSA, and NASA published an advanced notice of proposed rule (ANPR) in the **Federal Register** at 68 FR 4874, January 30, 2003. The ANPR listed provisions that may be inapplicable to the acquisition of COTS items, and requested public comment. (A prior ANPR had been issued under FAR Case 96–308.) The Councils published a proposed rule at 69 FR 2448, January 15, 2004. The comment period closed on March 15, 2004. The Councils received comments from 56 respondents, of which 3 were duplicates. The comments were thoroughly examined by the FAR Acquisition Law Team, Civilian Agency Acquisition Council (CAAC), and Defense Acquisition Regulations Council (DARC).

B. Definition of COTS.

The Councils received several comments on the definition of COTS.

1. Include services/IT in the definition. One respondent suggested that the definition of COTS item should delete the words ''of supply'' from the definition. The respondent states that this is not part of the statutory definition. Further, three respondents commented that definition of COTS should specifically include services. Another respondent suggested additional language in the definition of COTS to address software and other information technology products.

Response: The statute defines ''COTS item'' as an item that ''Is a commercial item as described in section 4(12)(A).'' ''Commercial item'' is defined at 41 U.S.C. 403(12). Paragraph (A) of that definition reads as follows:

''Any item, other than real property, that is of a type customarily used by the general public or by non-governmental purposes, and that—

(i) Has been sold, leased, or licensed to the general public; or

(ii) Has been offered for sale, lease or license to the general public.''

Paragraphs (F) and (G) of the definition deal with commercial services. These paragraphs were not referenced in the statutory definition of a COTS item. Services are therefore necessarily excluded from the definition. To make the definition clearer, the reference to the definition of commercial item has been revised to point to the first paragraph of the definition of commercial item.

The Councils have clarified that the words ''of supply'' include

''construction material''. Although the definition of ''construction materials'' states that they are ''supplies'', FAR Part 25 distinguishes between Buy American Act—Supplies (FAR Subpart 25.1) and Buy American Act—Construction materials (FAR Subpart 25.2). Therefore, this clarification is beneficial. The OFPP memorandum, dated February 14, 2008, specifically mentions waiver of the component test at 41 U.S.C. 10a (supply) and 10b (construction.)

Since the only laws waived are the component test of the Buy American Act and the recycled material estimate and certification, and no laws relating to FAR Part 27 have been waived, it is unnecessary to specifically mention information technology (IT) or software in the definition of COTS item.

2. ''Without modification''. One respondent considers the phrase ''without modification'' to be too restrictive. Some COTS products may require some type of modification to suit the intended use of the product.

Response: The phrase ''without modification'' is required by statute. However, the Councils have added ''under a contract or subcontract at any tier'' to clarify that whether an item is a COTS item is determined at the point of sale to the next higher tier subcontractor. This is consistent with the DoD definition of ''COTS item'' as applied to the waiver of specialty metals restrictions when acquiring COTS items. If a COTS item is accepted by the next high tier without modification, then any waiver applicable to COTS items is applicable to this item at the time of acceptance, even if it is subsequently modified. Although this distinction is not necessary in this particular rule, because both laws being waived apply only at the level of the prime contract, it is beneficial to keep this definition clear and consistent, in case a law is waived in the future that applies at the subcontract level. This intent to address COTS items at the subcontract level is demonstrated in section 804 of the National Defense Authorization Act for Fiscal Year 2008 (Pub. L. 110–181), which states in paragraph (b) (10 U.S.C. 2533b(h)) that ''This section does not apply to contracts or subcontracts for the acquisition of commercially available off-the-shelf items, as defined in section 35(c) of the Office of Federal Procurement Policy Act (41 U.S.C. 431(c))…''.

3. ''Sold in substantial quantities.'' One respondent requests that this should be clarified, that it is not necessary that the contractor itself sells substantial quantities. Multiple vendors may sell the item in substantial quantities in the commercial marketplace.

Response: This definition is statutory. There is nothing in the definition that implies that it is the contractor that must sell the item in substantial quantities in the commercial marketplace. The way the definition reads, the substantial quantities test does apply to the item, as suggested by the respondent.

4. Incorporate definition of COTS into FAR 52.202–1, Definitions. One respondent recommended that the definition of COTS item should be incorporated into FAR 52.202–1, Definitions, because the proposed rule added a cross reference in FAR 52.244–6 to the definition of COTS item at FAR 52.202–1.

Response: This comment was correct at the time, but has been overtaken by events. First, the final rule does not make the proposed change to FAR 52.244–6. In addition, the clause at FAR 52.202–1 was rewritten under another case, so that it no longer contains a list of definitions. Rather, it refers to where definitions can be found and provides guidance as to which definitions apply, when a term is defined in more than one place.

5. Subset of commercial items. The proposed rule included in the definition of COTS item the statement that COTS items are a subset of commercial items. Although no public comments were received on this issue, the Councils decided that it is redundant to state that COTS items are a subset of commercial items when the definition itself requires that COTS items meet the definition of the first paragraph of the definition of commercial item. This information that COTS items are a subset of commercial items is now provided at FAR 12.505, rather than in the definition.

C. Implementation of COTS in FAR Part 12.

The draft final rule modifies FAR Subparts 12.1, 12.3, and 12.5 as proposed, to address COTS items, and adds the section 12.505. However, because only 2 laws are being waived, section 12.505 has been modified to include only those 2 laws, while stating that all laws waived for contracts or subcontracts for the acquisition of commercial items are also waived for COTS (because it is a subset). This more clearly identifies the differences that apply to COTS items.

The rule does not make any change to FAR 12.504, based on the recommendation of SBA. An extraneous proposal to delete 15 U.S.C. 644(d), not directly related to this case, has been removed. SBA states that, although FASA attempted to eliminate labor surplus areas for purposes of subcontracting, the drafters of FASA missed the reference to subcontracting in 15(d) of the Small Business Act. Therefore, until this error is corrected, it is better to leave it on the list of laws that are inapplicable to subcontracts for the acquisition of COTS items.

D. Determination by OFPP.

After considering the analysis and recommendations as to laws that should be waived for the acquisition of COTS items, the Administrator for the Office of Federal Procurement Policy, made a determination on February 14, 2008, of the laws applicable and laws inapplicable to the acquisition of COTS items.

1. Laws Waived. The Administrator of OFPP exercised the authority to wholly or partially waive the following laws:

a. Buy American Act. A partial waiver of the Buy American Act (BAA)(41 U.S.C. 10a and 10b), limited to the Act's domestic components test was granted.

b. Estimate of Percentage of Recovered Material Act. The Estimate of Percentage of Recovered Material Act (42 U.S.C. 6962(c)(3)(A)) was waived in its entirety.

2. Waiver still under consideration. A partial waiver of the following law is under consideration and a determination and findings will be made on this law at a later date:

Rights in Technical Data (41 U.S.C. 418a and 10 U.S.C. 2520), specifically waiver of—

•Unlimited Government rights in data for operation, maintenance, installation, or training; and

• The Government's right to make unlimited copies.

3. Laws already inapplicable or modified for the acquisition of commercial items. No further modification was made to any of the following laws, which have already been determined inapplicable or modified for the acquisition of commercial items:

a. Walsh-Healey, 41 U.S.C. 43.

b. Contingent Fees, 41 U.S.C. 254(a) and 10 U.S.C. 2306(b).

c. Minimum response time, 41 U.S.C. 416(a) (3) and (6).

d. Drug Free Workplace, 41 U.S.C. 701.

e. Limitation on the use of appropriated funds, 31 U.S.C. 1354(a).

f. Contract Work Hours and Safety Standards Act, 40 U.S.C. 3701.

g. Anti-Kickback Act of 1986, 41 U.S.C. 57 (a) and (b), and 58.

h. Truth in Negotiations Act, 41 U.S.C. 254(d) and 10 U.S.C. 2306a.

i. Cost Accounting Standards, 41 U.S.C. 422.

4. Law not subject to waiver.

Limitation on appropriated funds to influence certain Federal contracting and financial transactions (31 U.S.C. 1352).

5. Laws that will not be waived because it is not in the best interest of the Government. A determination was made that the following laws will not be waived for the acquisition of COTS because it is not in the best interest of the Government:

a. Trade Agreements Act (19 U.S.C. 2501 and 19 U.S.C. 2512);

b. Restrictions on Advance Payments (31 U.S.C. 3324).

c. Employment Reports for Veterans (38 U.S.C. 4212(d)(l)).

d. Validation of Proprietary Data Restrictions (41 U.S.C. 253d and 10 U.S.C. 2321).

e. Prohibition on Limiting Subcontractor Direct Sales (41 U.S.C. 253g and 10 U.S.C. 2402).

f. Cargo Preference, 10 U.S.C. 2631(a) and 46 U.S.C. 1241(b).

g. Affirmative Action for Workers with Disabilities, 29 U.S.C. 793.

h. Equal opportunity for Special Disabled Veterans, 38 U.S.C. 4212.

i. Examination of records by the Comptroller General, 41 U.S.C. 254d(c) and 10 U.S.C. 2313(c).

j. Fly American Act, 49 U.S.C. 40118 (but see 12.503).

E. Discussion and analysis of laws considered for waiver.

1. Laws Waived.

a. Buy American Act (41 U.S.C. 10a and 10b), component test. Ten respondents specifically endorse waiver of the application of the Buy American Act (BAA) to COTS and 4 respondents endorse the waiver as part of a broad endorsement of the waivers in general, without specific identification or comment. Two respondents oppose the waiver of the BAA as a whole.

Some respondents state that the BAA makes it increasingly difficult for U.S. companies to compete for Federal business. These laws are out of place in the contemporary international market for commercial items. Companies must source products globally in order to be competitive in the worldwide marketplace. Therefore, companies must choose between being competitive in the global market and being competitive in the Government market. The BAA usually does not influence COTS manufacturers because revenue derived from Government sales is typically a very small percentage of overall revenue for COTS.

• Therefore, Federal agencies are often denied access to the most productive, cost-effective technology.

• BAA restrictions may also hamper the Government's ability to fully implement federal policies. It may hinder Government access to technology compliant with Section 508 of the Rehabilitation Act of 1973 (accessible to employees with disabilities) and the most energy-efficient products, as required by E.O. 13101 and 13123.

Some respondents are concerned that the Government-unique requirement to track where components are being manufactured imposes a severe administrative burden, especially on small business. It requires contractors to establish and maintain costly and labor intensive management systems. Tracking the place of manufacture and component value is not necessary for the general origin labeling requirements applicable generally in the U.S. commercial market place. BAA compliance is a major procurement requirement that adds complexity and cost to the delivery of goods to the Government. The increased cost of ensuring compliance with the BAA keeps some firms out of the market completely and affects the price of products sold to the Government.

Another issue for respondents is that application of the regulations relating to the BAA is very complex and difficult. The certification requirements potentially expose manufacturers to civil false claims and other legal sanctions, even when they have taken extraordinary steps to comply with the BAA.

Some respondents contend that Congress mandates the elimination, where possible, of barriers to the Government's ability to procure commercial items.

Federal agencies contend that it is difficult and causes delay to try to obtain case-by-case waivers of the BAA.

On the other hand, two respondents were concerned that a permanent waiver of the BAA should not be granted without reciprocity. These respondents believed that the Government needs these provisions to stay in general effect so that possibility of waiver will provide incentive to encourage other countries to provide reciprocal access. Agencies can waive the BAA on a case-by-case basis or for a class of items when it is in the public interest to do so.

Response: The Councils concur with the respondents on the especially burdensome nature of the component test. Today's markets are globally integrated with foreign components often indistinguishable from domestic components. Manufacturers' component purchasing decisions are based on factors such as cost, quality, availability, and maintaining the state of the art, not the country of origin, making it much more difficult in today's market for a manufacturer to guarantee the source of its components over the term of a contract. It is even more difficult for a dealer to determine and guarantee the source of the components included in products on the shelf. The difficulty in tracking the country of origin of components is a disincentive for firms to become defense contractors, limiting the ability of the Government to purchase products already in the commercial distribution systems. In today's globally integrated market, it is expensive for manufacturers to distinguish between foreign and domestic components. Requiring them to do so results in increased costs of procurements and impedes the ability to obtain the latest advances in commercial technology.

The rationale provided against waiver of the BAA as a whole is resolved by waiving only the component test of the BAA. The component test of the BAA has already been waived for all acquisitions subject to the World Trade Organization Government Procurement Agreement (WTO GPA). By waiving only the component test of the BAA for COTS items, but still requiring manufacture in the United States, the Government can preserve an incentive to encourage other countries to provide reciprocal access, while reducing the significant administrative burden on contractors and the associated increased cost to the Government.

A determination was made that a waiver of the components test would allow a COTS item to be treated as a domestic end product if it is manufactured in the U.S., without tracking the origin of the components. Waiving only the component test of the BAA for COTS items and still requiring the end product to be manufactured in the U.S., reduces significantly the administrative burden on contractors and the associated cost to the Government. The U.S. Trade Representative's Office was consulted and did not oppose the partial waiver of the BAA. The component test of the BAA was waived because it is in the best interest of the U.S. to do so.

The draft final rule modifies FAR Part 25 and associated clauses to implement waiver of the component test of the BAA:

• Indication of the new waiver at FAR 25.101 (Buy American Act—Supplies, General) and FAR 25.201, (Buy

American Act—Construction Materials, Policy).

• Changes to the definition of ''domestic end product'' and ''domestic construction material'' at FAR 25.003 and in the associated clauses, to include COTS end products or construction materials manufactured in the United States for which the component test of the Buy American Act has been waived; and

• The following FAR provisions and clauses need only minor modifications, to incorporate the new definitions, make discussions of components applicable only to items other than COTS items, and clarify that now a United States end product that does not qualify as a domestic end product is an end product that is not a COTS item and does not meet the component test in paragraph (2) of the definition of ''domestic end product'':

• 52.225–1 Buy American Act—Supplies.

• 52.225–2 Buy American Act Certificate.

• 52.225–3 Buy American Act—Free Trade Agreements—Israeli Trade Act.

• 52.225–4 Buy American Act—Free Trade Agreements—Israeli Trade Act Certificate.

• 52.225–9 Buy American Act—Construction Materials.

• 52.225–10 Notice of Buy American Act Requirement—Construction Materials.

• 52.225–11 Buy American Act—Construction Materials under Trade Agreements, and Alternate I.

• 52.225–12 Notice of Buy American Act Requirement—Construction Materials Under Trade Agreements.

Conforming changes are also required for—

• 52.212–3 Offeror Representations and Certifications—Commercial Items;

• 52.212–5 Contract Terms and Conditions Required to Implement Statutes or Executive Orders—Commercial Items; and

• 52.213–4 Terms and Conditions—Simplified Acquisitions (Other Than Commercial Items).

b. Certification and Estimate of Percentage of Recovered Material (42 U.S.C. 6962 (c)(3)(A)). There were no specific comments supporting waiver of the Estimate of Percentage of Recovered Materials. However, ten respondents supported waiver as part of broad general support for the proposed rule. One respondent specifically opposed to waiver of 42 U.S.C. 6962(c)(3)(A), Estimate of Percentage of Recovered Material, because the respondent feels that it may preclude contractors from having to indicate on their products the percent of recycled materials contained therein. Information on the recovered material content is necessary in order for agencies to carry out the intent of the Resource Conservation and Recovery Act (RCRA) and Executive order (E.O.) 13101.

Response: Both the Environmental Protection Agency (EPA) and the Office of the Federal Environmental Executive (OFEE) agree that requiring pre-award certification from offerors and a written estimate of percentage of recovered materials from the contractor after contract completion are unnecessary requirements for COTS. These requirements are a paperwork exercise and are not consistent with buying COTS items from the commercial market place. The recycled content statement on the product packaging serves as the certification and the estimate. The Chief Acquisition Officer and Senior Procurement Executive at EPA and the OFEE were not opposed to waiving the requirement for certification and estimation for COTS items. This does not waive any of the other RCRA requirements. The Government will still acquire competitively, in a cost-effective manner, products that meet reasonable performance requirements and that are composed of the highest percentage of recovered materials practicable.

A determination was made that waiver of this law is in the best interest of the Government because the law's requirements are not consistent with the acquisition of COTS items in the commercial marketplace.

The only necessary changes to implement this waiver are—

i. Modification of the clause prescription at FAR 23.406 to exclude application to COTS items (as proposed); and

ii. Modification of FAR 52.212–5(b)(25)(i) and (ii), to indicate that FAR 52.223–9 is not applicable to the acquisition of COTS items.

2. Waiver still under consideration. Rights in Technical Data (41 U.S.C. § 418a and 10 U.S.C. § 2320).

Ten respondents supported waiver as part of broad general support for the proposed rule (Respondents No. 9, 11, 19, 20, 26, 28, 32, 34, 38, and 40). No respondents opposed the waiver. However, the Councils did not reach consensus on this waiver. The Department of the Treasury opposed waiver of this provision. The proposed waiver of the data rights statutes is based on the premise that, because COTS items are developed at private expense, there would be no Government rights in technical data associated therewith. The Councils do not agree entirely with this premise. For example, FAR 52.227–14 provides for unlimited rights in form, fit and function data; and in manuals and training materials necessary for installation, operation, maintenance, and repair; regardless of whether such data is developed at Government expense. The fact that items delivered under a contract are COTS does not diminish the Government's need to operate and repair them, and form, fit, and function data could be critical if a COTS item is integrated into a Government system and must subsequently be replaced.

The Councils agree that the relevant statutes do not focus only on data related to technologies developed exclusively at the Government's expense - they also cover development in whole or in part at private expense, including commercial item technologies (this is especially clear in the DoD statute, 10 U.S.C. 2320). Further, it is not accurate to conclude that the possibility of Government funding for (elements of) COTS technologies is always ''irrelevant.'' The statutory schemes have numerous elements that are designed to protect important rights and proprietary interests of contractors (and subcontractors), especially in cases of privately developed or commercial technologies.

For example, the Government is prohibited from requiring contractors to provide the Government with detailed design data, and from requiring the contractors to relinquish proprietary rights in data related to proprietary or commercial technologies, as a condition of contract award (see 418a(a), and 2320(a)(2)(F)). Additionally, the DoD scheme specifically and expressly addresses the rights in data related to technologies developed in whole or in part at private expense (2320(a)(2)(B) & (C)), and the civilian statutes requires the regulations to address these funding scenarios (418a(c)(1)). Both statutory schemes also recognize the special requirements under the Small Business Innovation Research (SBIR) program, which allow the small business to treat even 100 percent Government-funded technologies as proprietary for certain periods.

Similarly, the schemes identify and protect the interests of the Government in acquiring and using data for certain important purposes, such as operation and maintenance, or emergency repair and overhaul, of the item. These protections of interests, both for the contractors/subcontractors and the Government, are equally applicable to COTS items as for other commercial items or noncommercial items (as the Department of Treasury notes).

All of these considerations demonstrate that the statutory schemes

are designed to balance Government and private interests in all such acquisitions, and thus should not be waived in their entirety for COTS item acquisitions.

3. Laws already inapplicable or modified for the acquisition of commercial items. None of the respondents commented specifically on any of these laws that are already inapplicable or modified for the acquisition of commercial items, as identified in section C.3. of this notice.

4. Law not subject to waiver.

Limitation on appropriated funds to influence certain Federal contracting and financial transactions (31 U.S.C. 1352). After publication of the proposed rule, the Councils determined that this statute is not eligible for waiver because it provides for criminal or civil penalties.

5. Laws that will not be waived because it is not in the best interest of the Government.

a. Trade Agreements Act (TAA)(19 U.S.C. 2501 and 19 U.S.C. 2512). Many of the respondents (21) endorse waiver of the application of the trade agreements prohibitions to COTS.

On the other hand, 4 respondents (including the United States Trade Representative (USTR) and the Department of Commerce) opposed the waiver.

The proponents of waiver of the purchase restrictions of the Trade Agreements Act (TAA) contend that—

i. The TAA makes it increasingly difficult for U.S. companies to compete for Federal business. These laws are out of place in the contemporary international market for commercial items. Companies must source products globally in order to be competitive in the worldwide marketplace. Therefore, companies must choose between being competitive in the global market and being competitive in the Government market. The trade agreements procurement restriction usually does not influence COTS manufacturers because revenue derived from Government sales is typically a very small percentage of overall revenue for COTS.

• Therefore, Federal agencies are often denied access to the most productive, cost-effective technology.

• TAA restrictions may also hamper the Government's ability to fully implement Federal policies. It may hinder Government access to technology compliant with Section 508 of the Rehabilitation Act of 1973 (accessible to employees with disabilities) and the most energy-efficient products, as required by E.O. 13101 and 13123.

• Although most IT and electronics manufacturing now occurs in Asia, only 4 Asian countries have signed the GPA – Hong Kong, Japan, Singapore, and the Republic of Korea. Asian countries not signatories include China, Indonesia, Malaysia, the Philippines, and Taiwan.

ii. The Government-unique requirement to track where products are being manufactured imposes a severe administrative burden. It requires contractors to establish and maintain costly and labor intensive management systems. TAA compliance is a major procurement requirement that adds complexity and cost to the delivery of goods to the Government. The increased cost of ensuring compliance with the TAA keeps some firms out of the market completely.

iii. Application of the regulations relating to trade agreements is very complex and difficult. It is often difficult to determine ''substantial transformation'' for purposes of the TAA. The certification requirements potentially expose manufacturers to civil False Claims and other legal sanctions, even when they have taken extraordinary steps to comply with the TAA.

iv. Congress mandates the elimination, where possible, of barriers to the Government's ability to procure commercial items.

v. Barring access to the U.S. Government market has not provided the leverage to open foreign government markets that U.S. trade negotiators may have envisioned when the TAA was passed. Several commenters state that of the 145 WTO member countries, only 28 countries have signed the GPA in 25 years, 23 of the signatories being original signatories.

vi. The restrictions of the TAA are not required by any treaty of international agreement, including the GPA. The commenters believe that the U.S. is the only GPA signatory to enact such market restrictions.

vii. It is difficult and causes delay to try to obtain case-by-case waivers of the trade agreements.

The opponents of waiver of the purchase restrictions of the TAA contend that—

i. A permanent waiver would significantly disadvantage U.S. suppliers, especially small businesses, without providing reciprocal market access for them. China, Malaysia, and the Philippines have not joined the GPA or provided benefits in a bilateral agreement.

ii. USTR's ability to waive the TAA purchasing restriction on a case-by-case basis has been a key element in its ability to negotiate reciprocal market access for U.S. suppliers in the government procurement markets of foreign countries, through bilateral FTAs, as well as accession to the GPA. In recent years, USTR has concluded new FTAs with Chile, Australia, Morocco, and more agreements are pending. A permanent waiver for COTS would severely undermine leverage that is critical to USTR's ability to negotiate such agreements.

iii. There is no need for a permanent waiver, because waivers can be granted on a case-by-case basis when in the national interest.

Response: The TAA essentially outlines a process for approval of trade agreements, and the relationship of trade agreements to U.S. law. A determination was made that a waiver of the prohibition on acquisitions of products from countries that have not entered into trade agreements with the United States would put U.S. suppliers, especially small businesses, at a significant disadvantage without providing reciprocal market access for them. China, Malaysia, and the Philippines have not joined the GPA or provided benefits in a bilateral agreement. USTR's ability to waive the TAA purchasing restriction on a case-by-case basis has been a key element in its ability to negotiate reciprocal market access for U.S. suppliers in the government procurement markets of foreign countries, through bilateral Free Trade Agreements (FTA), as well as consent to the GPA. In recent years, USTR has concluded new FTAs with Chile, Australia, Morocco, Bahrain, Dominican Republic-Central America, and more agreements are pending. Therefore, a permanent waiver is not in the best interests of the Government because it would severely undermine leverage that is critical to USTR's ability to negotiate such agreements. USTR can grant waivers on a case-by-case basis when in the national interest.

b. Restrictions on Advance Payments (31 U.S.C. 3324). The Councils received 10 comments that supported waiver as part of broad general support for the proposed rule and two comments specifically supporting the waiver of the restriction on advance payments, whereas one respondent specifically opposed the waiver of the restriction on advance payments.

One respondent supported waiving the restriction on the basis that it would permit the Government to follow the common business practice of ''payment due upon receipt.'' Another respondent supported waiving the restriction because it also believes that it is common business practice to make payment for IT support packages at the beginning of the term. The respondent that opposed the waiver of the statute

was concerned that contracting officers will be faced with demands for advance payments for routine COTS purchases.

Response: In addition to permitting invoicing upon delivery to the ''point of first receipt by the Government,'' the proposed rule would also have allowed invoicing upon delivery of supplies to a post office or common carrier. Consequently, the Government might be obligated to make payment before receipt.

This statute prohibits, except in certain circumstances, payment in excess of the value of supplies or services already delivered or provided. 31 U.S.C. 3324(b) provides that an advance of public money may be made only if it is authorized by a specific appropriation or other law or as authorized by the President in some circumstances. 41 U.S.C. 255(f) and 10 U.S.C. 2307(f) provide some authority for advance payments for commercial items, but treat this as Government financing and require the Government to obtain adequate security. It was determined that a permanent waiver is not necessary because 41 U.S.C. § 255(f) (as implemented by FAR 32.2, Commercial Item Purchase Financing, specifically FAR 32.202–4(a)(2)) already authorizes advance payments for commercial item acquisitions, and agencies have the authority to waive, if it is in the best of the Government.

c. Employment Reports for Veterans (38 U.S.C. 4212(d)(l)). The Councils received one comment specifically in favor of waiving the statute and 10 respondents supported waiver as part of broad general support for the proposed rule. The Councils also received 2 responses specifically opposed to the waiver.

The respondents who favored waiver contended that waiving the statute only affects the submission of a report and data gathering. By waiving the statute, an administrative function would be eliminated but the intent to continue with the regulations to promote veteran employment would remain unchanged.

Respondents who objected to waiver of the statute feared that veteran programs would be impacted.

Response: This statute requires that each contractor that enters into a contract in excess of $100,000 for personal property and non-personal services, including construction, provide an annual report to the Secretary of Labor that includes specific information about their contractor workforce. The report requires Federal contractors and subcontractors to ''take affirmative action'' to hire and promote qualified special disabled veterans, veterans of the Vietnam-era and any veteran who served on active duty during a war or in a campaign or expedition for which a campaign badge has been authorized. Congress has taken a keen interest in the VETS 100 Report, as evidenced by Section 1354 of Public Law 105–339, Veterans Employment Opportunities Act of 1998, which supports this reporting requirement. A determination was made not to waive the requirement for contractors to file employment reports because it is not in the best interest of the Government to do so.

d. Validation of Proprietary Data Restrictions (41 U.S.C. 253d and 10 U.S.C. 2321). 10 respondents supported waiver as part of broad general support for the proposed rule. No respondents opposed the waiver.

Response: This statute provides an extensive procedure for due process for a Government contractor when the Government has a suspicion that technical data the contractor is claiming to be proprietary was, in fact, produced under a Government contract and was not produced at private expense. The validation scheme is also carefully structured to balance the interest of all parties, and create a uniform mechanism to determine the appropriate allocation of rights in the data. These statutes establish procedures, rights, and legal remedies regarding the validation of the asserted proprietary restrictions. A determination was made that these statutes should be available to balance the interest of all parties involved in an acquisition, including COTS.

e. Prohibition on Limiting Subcontractor Direct Sales (41 U.S.C. 253g and 10 U.S.C. 2402). Nine respondents supported waiver as part of broad general support for the proposed rule. One respondent opposed the waiver.This respondent stated that this exemption has some potential for harming small business and the Federal Government itself.

Response: This statute was enacted as part of Pub. L. 98–577, which was intended by Congress as a comprehensive solution to ''$600 toilet seats and $400 hammers.'' This provision answered the practice of major defense contractors prohibiting their subcontractors from selling directly to the Government. In the past, when the prime contractor wanted to be the source to the Government, they would charge at least a material overhead to any cost or price from the subcontractor/supplier. Waiving this Act would allow prime contractors to restrict their subcontractors from selling directly to the Government and limit opportunities for small businesses, including women-owned and minority-owned businesses. A determination was made not to waive this Act so as to ensure competition is preserved for all sectors of the economy.

f. Cargo Preference, 10 U.S.C. 2631(a) and 46 U.S.C. 1241(b). The Councils did not receive any comments specifically supporting waiver of the cargo preference laws for acquisition of COTS. 10 respondents supported waiver as part of broad general support for the proposed rule. 14 respondents specifically opposed a waiver of Cargo Preference laws for COTS, including the following Government agencies:

- U.S. Maritime Administration (MARAD)(Department of Transportation)
- MARAD, Division of Maritime Programs
- Under Secretary of Defense (Acquisition, Technology, and Logistics)
- United States Transportation Command (Department of Defense)

Opponents of the waiver of Cargo Preference laws when acquiring COTS items present the following rationale:

i. The Cargo Preference laws are vital to maintaining a viable merchant marine, including both vessels and mariners.

ii. The proposed waiver is contrary to the Government's maritime policy. The Secretary of Transportation stated in March 2004 that ''cargo preference laws are essential elements of America's national maritime policy.''

iii. Many respondents state that the COTS category represents the vast preponderance of cargo that is carried for or sponsored by the U.S. Government. The MARAD Administrator states that waiver could result in the potential loss of nearly $1.2 billion in revenue to U.S. flag vessel operators and further loss to the economy through job loss. The American Maritime Congress believes that finalization of this waiver will eventually result in more than 100 U.S.-flag vessels in the international trades leaving the U.S. flag, and points out further adverse impact on foreign exchange, and reduced Federal tax revenues.

iv. Weakening of the U.S. maritime industry will adversely impact our country's ability to respond to international crises. We need U.S.-flag vessels to transport troops, machinery, and medical and other critical supplies throughout the world during contingencies or war.

v. The waiver will put at risk two DoD programs (the Voluntary Intermodal Sealift Agreement and the Maritime Security Program) that are essential to U.S. security interests. Through these

programs, DoD has immediate access to reliable commercial maritime assets at a fraction of the cost it would incur if it had to replicate those assets (Transportation Institute). Shippers cannot dedicate valuable assets to the defense and other governmental needs of the United States unless they can rely on a steady flow of cargoes.

vi. DoD needs a viable merchant marine to provide a pool of trained mariners from which DoD crews Defense reserve ships.

vii. U.S.-flag commercial vessels are forced to operate in an international shipping arena that is dominated by state owned and controlled merchant fleets. They are financially disadvantaged due to higher labor costs, vessel standards, and tax disadvantages. Therefore, the U.S.-flag vessels require the help of the U.S. Government to compete.

viii. Waiving the Cargo Preference laws at this time would be inequitable, because shipping companies have relied upon the present laws to take irrevocable business actions.

ix. The American Shipbuilding Association is further concerned that this waiver would adversely impact the defense shipbuilding industry, which in turn, will threaten America's ability to build a Navy and impact the national security of the United States.

x. The FAR Council already made the determination that waiver of Cargo Preference laws for all commercial subcontracts was not in the best interest of the Government. 41 U.S.C. 430 requires that provisions of law described in 41 U.S.C. 430(c) shall be included on the list of inapplicable provisions of law to subcontracts for the procurement of commercial items unless the FAR Council makes a written determination that such exemption would not be in the best interest of the Government. On May 1, 1996, the Administrator of OFPP signed a memorandum stating the policy that the waiver of Cargo preference for commercial subcontracts ''is not intended to waive compliance with the Cargo Preference Laws for ocean cargos clearly destined for eventual military or Government use.'' This memorandum was the result of extensive negotiations between representatives from the national Economic Council, OFPP, DoD, MARAD, and the maritime industry. In 2002, a formal determination was signed by all members of the FAR Council that it would be in the best interest of the Government to limit the waiver of the Cargo preference laws, in accordance with the OFPP memorandum, dated May 1, 1996, as implemented in the FAR through FAR Case 1999–024.

Response: 10 U.S.C. 2631(a), Transportation of Supplies by Sea (The Cargo Preference Act of 1904), requires the use of only U.S.-flag vessels for ocean transportation of supplies owned by, or destined for use by for the Army, Navy, Air Force, or Marine Corps unless those vessels are not available at fair and reasonable rates. 46 U.S.C. 1241(b), Transportation in American Vessels of Government Personnel and Certain Cargo (The Cargo Preference Act of 1954), requires that Government agencies acquiring, either within or outside the United States, supplies that may require ocean transportation shall ensure that at least 50 percent of the gross tonnage of these supplies (computed separately for dry bulk carriers, dry cargo liners, and tankers) is transported on privately owned U.S.-flag commercial vessels to the extent that such vessels are available at rates that are fair and reasonable for U.S.-flag commercial vessels. The Cargo Preference laws are vital to maintaining a viable merchant marine, including both vessels and mariners and are essential elements of America's national maritime policy. Therefore, a determination was made that it is not in the best interest of the Government to waive this Act.

g. Affirmative Action for Workers with Disabilities, 29 U.S.C. 793. The Councils did not receive any specific comments in favor of waiving the statute. 10 respondents supported waiver as part of broad general support for the proposed rule. The Councils received 2 responses specifically opposed to waiver, *i.e.*—

- Department of Veterans Affairs
- U.S. Department of Labor

ANALYSIS: The Department of Veterans Affairs (VA) objected to waiver on the grounds that, in meeting its mission to support veterans, including those who with service related disabilities, the VA purchases mostly COTS items and would consider it unfair for the VA to purchase supplies from companies that would not be required to comply with the statute.

The Department of Labor stated that ''The relatively minor burdens imposed on contractors by Section 503 of the Rehabilitation Act of 1973, (29 U.S.C. § 793) are justified by the significant benefits the law provides for disabled job applicants and workers. The Census Bureau estimates that approximately 18.6 million American workers have disabilities. Section 503 requires, for example, that contractors recruit qualified applicants with disabilities for job openings, develop anti-disability harassment policies, and refrain from discriminating against qualified individuals with disabilities. Reducing protections for qualified job applicants and workers with disabilities would not be consistent with the President's *New Freedom Initiative*, designed to ensure that Americans with disabilities have the opportunity to learn and develop skills and to engage in productive work.''

Response: A determination was made that the requirements of the affirmative action provision are justified by the significant benefits the law provides for disabled job applicants and workers. Reducing protections for qualified job applicants and workers with disabilities would not be consistent with the President's New Freedom Initiative.

h. Equal opportunity for Special Disabled Veterans, 38 U.S.C. 4212. The Councils did not receive any specific comments in favor of waiving the statute. 10 respondents supported waiver as part of broad general support for the proposed rule. The Councils received 3 responses specifically opposed to waiver, including—

- Department of Veterans Affairs
- U.S. Department of Labor

The Department of Veterans Affairs raised objections to waiver on the grounds that, in meeting its mission to support veterans, including those with service related disabilities, the VA purchases mostly COTS items and would consider it unfair for the VA to purchase supplies from companies that would not be required to comply with the statute.

The Department of Labor objects to waiving the statute on the basis that the relatively minor burdens imposed by the affirmative action provision are justified by the significant direct benefits for individual protected veterans. Waiving the law would reduce possible job opportunities for veterans.

Another respondent stated that ''At a time when our nation is at war and our veterans are returning home…every effort should be made to ensure their employment rather than limit their opportunities''.

Response : It was determined that the affirmative action provision is justified by the significant direct benefits for individual protected veterans, and we must make every effort to ensure their employment.

i. Examination of records by the Comptroller General, 41 U.S.C. 254d(c) and 10 U.S.C. 2313(c). The Councils did not receive any comments specifically supporting waiver of the examination of records by the Comptroller General for acquisition of COTS. 10 respondents supported waiver as part of broad general support for the proposed rule.

The Councils received comments from 2 respondents opposed the waiver.

One respondent objected to waiver of the examination of records by the Comptroller General because this is the last remaining general contractual audit authority applicable to commercial items. If this authority is removed, the Government will have no routine audit authority. The respondent cites legislative history that Congress did not intend to eliminate this authority.

Another respondent also strongly objects to waiver of this authority, stating that removal would improperly restrict the authority of the Comptroller General's ability to review and examine contractor records related to the expenditure of public funds.

Response: This is the only general contractual audit authority applicable to commercial items. Thus it was determined that although access to contractor records will not generally be necessary because of the protection provided by competitive procedures of the marketplace, the Comptroller General should have the ability to examine records if the need arises.

j. Fly American Act, 49 U.S.C. 40118. The Councils did not receive any comments specifically supporting waiver of the cargo preference laws for acquisition of COTS. 10 respondents supported waiver as part of broad general support for the proposed rule. The Councils received 2 responses specifically opposed to the waiver of the Fly American Act for acquisition of COTS, *i.e.*—

• United States Transportation Command

• Under Secretary of Defense (Acquisition, Technology, and Logistics)

Opponents of the waiver of the Fly American Act when acquiring COTS items present the following rationale:

i. The Fly American Act is vital to maintaining a viable U.S. air carrier industry, which is heavily relied on by DoD during contingencies or war.

ii. Weakening of the U.S. air industry will adversely impact our country's ability to move forces and equipment during contingencies or war.

Response: The Fly American Act is not applicable to subcontracts for the acquisition of commercial items. The requirement for use of a clause is not applicable to prime contracts for the acquisition of commercial items, but the requirements of the Act still apply. A determination was made that the Fly American Act is vital for maintaining a viable U.S. air carrier industry, which is heavily relied upon by DoD during contingencies or war.

F. Other public comments.

1. Recommend an Alternate I to proposed clause 52.212–XX, for paperless writing systems. DoD uses a process called Automatic Clause Selection, rather than having the contracting officer check off applicable clauses from the list.

Response: The final rule will not include the new clause 52.212–XX, but will continue to use FAR clause 52.212–5. Furthermore, DoD already has a deviation in place for this clause that meets the needs of a paperless system.

2. Limit the imposition of non-commercial terms and conditions. Multiple respondents were concerned about the proliferation of Government-unique clauses in contracts for the acquisition of COTS items, and want limitations imposed on the authority of the contracting officer to include clauses that are not commonly used with COTS items being procured in the marketplace.

Response: This suggestion is outside the scope of the case.

3. DFARS 212.504 still applies for DoD procurements. This respondent wants to ensure that for DoD COTS procurement, 10 U.S.C. 2320 and 2321 (dealing with technical data rights), which are listed at DFARS 212.504, are still waived.

Response: This is outside the scope of this case.

4. Use of "et seq.". Several respondents were concerned that in some cases the statutory references followed by "*et seq.*" were too broad.

Response: This issue has been resolved in the final rule. The term "*et seq.*" is not used in the statutory references for laws to be waived in the final rule.

5. Significant rule. Several respondents were concerned that the proposed rule would satisfy the economic impact threshold for a major rule and clearly meets the threshold requirements to be classified as a significant rule.

Response: The statutes that were of particular concern to these respondents (Cargo Preference) have not been waived. Therefore, the comments are no longer relevant.

6. Comments no longer applicable. There are several comments not specifically addressed in this **Federal Register** notice, because they are no longer applicable, due to other changes in the final rule.

7. E-verify. The councils note that the FAR 2.101 definition of "Commercially available off the shelf (COTS) item" differs from the COTS definition in 22.1801. Pursuant to the FAR treatment of definitions, the COTS definition is 22.1801 is solely applicable to issues arising under Subpart 22.18 and associated clause (FAR case 2007–013).

This is not a significant regulatory action and, therefore, was not subject to review under Section 6(b) of Executive Order 12866, Regulatory Planning and Review, dated September 30, 1993. This rule is not a major rule under 5 U.S.C. 804.

G. Regulatory Flexibility Act

The Department of Defense, the General Services Administration, and the National Aeronautics and Space Administration certify that this final rule will not have a significant economic impact on a substantial number of small entities within the meaning of the Regulatory Flexibility Act, 5 U.S.C. 601, *et seq.*, because this rule relieves burdens rather than imposes burdens. Only 2 laws have been waived, and the relief to small business is not considered to be of significant economic impact.

H. Paperwork Reduction Act

The Paperwork Reduction Act (44 U.S.C. Chapter 35) applies because the final rule will result in reduced burdens under OMB Control number 9000–0024 (52.225–2), 9000–0130 (52.225–4), 9000–0134 (52.223–9), and 9000–0141 (52.225–9 and 52.225–11). The Councils anticipate the following reductions:

OMB Control No.	Current respondents	Current responses	Current hours	Revised respondents	Revised responses	Revised hours
9000–0024	3,707 x 15 =	55,605 x 0.109 =	6,061	3,521 x 15	52,815 x .109	5,757 hrs
9000–0130	1,140 x 5 =	5,700 x .117 =	667	1083 x 5 =	5415 x .117 =	634 hrs
9000–0134	64,350 x 1 =	64,350 x .325 =	20,913	64 x 1	64 x .325	21 hrs
9000–0141	500 x 2 =	1,000 x 2.5 =	2,500	450 x 2 =	900 x 2.5 =	2,250 hrs

A Paperwork Burden Act Change to pertinent existing burdens has been submitted to the Office of Management and Budget under 44 U.S.C. Chapter 35, *et seq.*

List of Subjects in 48 CFR Parts 2, 3, 12, 23, 25, and 52

Government procurement.

Dated: December 24, 2008

Edward Loeb,

Acting Director, Office of Acquisition Policy.

■ Therefore, DoD, GSA, and NASA amend 48 CFR parts 2, 3, 12, 23, 25, and 52 as set forth below:

■ 1. The authority citation for 48 CFR parts 2, 3, 12, 23, 25, and 52 continues to read as follows:

Authority: 40 U.S.C. 121(c); 10 U.S.C. chapter 137; and 42 U.S.C. 2473(c).

PART 2—DEFINITIONS OF WORDS AND TERMS

■ 2. Amend section 2.101 in paragraph (b)(2) by adding, in alphabetical order, the definition ''Commercially available off-the-shelf (COTS) item'' to read as follows:

2.101 Definitions.

* * * * *

(b) * * *

(2) * * *

Commercially available off-the-shelf (COTS) item (1) Means any item of supply (including construction material) that is—

(i) A commercial item (as defined in paragraph (1) of the definition in this section);

(ii) Sold in substantial quantities in the commercial marketplace; and

(iii) Offered to the Government, under a contract or subcontract at any tier, without modification, in the same form in which it is sold in the commercial marketplace; and

(2) Does not include bulk cargo, as defined in section 3 of the Shipping Act of 1984 (46 U.S.C. App. 1702), such as agricultural products and petroleum products.

* * * * *

PART 3—IMPROPER BUSINESS PRACTICES AND PERSONAL CONFLICTS OF INTEREST

■ 3. Revise section 3.503–2 to read as follows:

3.503–2 Contract clause.

The contracting officer shall insert the clause at 52.203–6, Restrictions on Subcontractor Sales to the Government, in solicitations and contracts exceeding the simplified acquisition threshold, except when contracts are for the acquisition of commercially available off-the-shelf items. For the acquisition of commercial items, the contracting officer shall use the clause with its Alternate I.

PART 12—ACQUISITION OF COMMERCIAL ITEMS

■ 4. Add section 12.103 to read as follows:

12.103 Commercially available off-the-shelf (COTS) items.

COTS items are defined in 2.101. Unless indicated otherwise, all of the policies that apply to commercial items also apply to COTS. Section 12.505 lists the laws that are not applicable to COTS (in addition to 12.503 and 12.504); the components test of the Buy American Act, and the two recovered materials certifications in Subpart 23.4, do not apply to COTS.

12.301 [Amended]

■ 5. Amend section 12.301 in the first sentence of paragraph (b)(4) by removing ''executive orders'' and adding ''Executive orders'' in its place;

■ 6. Revise the heading of Subpart 12.5 to read as follows.

Subpart 12.5—Applicability of Certain Laws to the Acquisition of Commercial Items and Commercially Available Off-The-Shelf Items

■ 7. Revise section 12.500 to read as follows:

12.500 Scope of subpart.

(a) As required by sections 34 and 35 of the Office of Federal Procurement Policy Act (41 U.S.C. 430 and 431), this subpart lists provisions of law that are not applicable to—

(1) Contracts for the acquisition of commercial items;

(2) Subcontracts, at any tier, for the acquisition of commercial items; and

(3) Contracts and subcontracts, at any tier, for the acquisition of COTS items.

(b) This subpart also lists provisions of law that have been amended to eliminate or modify their applicability to either contracts or subcontracts for the acquisition of commercial items.

■ 8. Amend section 12.502 by adding paragraph (c) to read as follows:

12.502 Procedures.

* * * * *

(c) The FAR prescription for the provision or clause for each of the laws listed in 12.505 has been revised in the appropriate part to reflect its proper application to contracts and subcontracts for the acquisition of COTS items.

■ 9. Add section 12.505 to read as follows:

12.505 Applicability of certain laws to contracts for the acquisition of COTS items.

COTS items are a subset of commercial items. Therefore, any laws listed in sections 12.503 and 12.504 are also inapplicable or modified in their applicability to contracts or subcontracts for the acquisition of COTS items. In addition, the following laws are not applicable to contracts for the acquisition of COTS items:

(a)(1) 41 U.S.C. 10a, portion of first sentence that reads ''substantially all from articles, materials, or supplies mined, produced, or manufactured, as the case may be, in the United States,'' Buy American Act—Supplies, component test (see 52.225–1 and 52.225–3).

(2) 41 U.S.C. 10b, portion of first sentence that reads ''substantially all from articles, materials, or supplies mined, produced, or manufactured, as the case may be, in the United States,'' Buy American Act—Construction Materials, component test (see 52.225–9 and 52.225–11).

(b) 42 U.S.C. 6962(c)(3)(A), Certification and Estimate of Percentage of Recovered Material.

PART 23—ENVIRONMENT, ENERGY AND WATER EFFICIENCY, RENEWABLE ENERGY TECHNOLOGIES, OCCUPATIONAL SAFETY, AND DRUG-FREE WORKPLACE

■ 10. Amend section 23.406 by revising the introductory text of paragraph (c); and removing from paragraph (d) ''Insert'' and adding ''Except for the acquisition of commercially available off-the-shelf items, insert'', in its place. The revised text reads as follows:

23.406 Solicitation provisions and contract clauses.

* * * * *

(c) Except for the acquisition of commercially available off-the-shelf items, insert the provision at 52.223–4, Recovered Material Certification, in solicitations that—

* * * * *

PART 25—FOREIGN ACQUISITION

■ 11. Amend section 25.003 by revising the definitions ''Domestic construction material'' and ''Domestic end product'' to read as follows:

25.003 Definitions.

* * * * *

Domestic construction material means—

(1) An unmanufactured construction material mined or produced in the United States;

(2) A construction material manufactured in the United States, if—

(i) The cost of its components mined, produced, or manufactured in the United States exceeds 50 percent of the cost of all its components. Components of foreign origin of the same class or kind for which nonavailability determinations have been made are treated as domestic; or

(ii) The construction material is a COTS item.

Domestic end product means—

(1) An unmanufactured end product mined or produced in the United States;

(2) An end product manufactured in the United States, if—

(i) The cost of its components mined, produced, or manufactured in the United States exceeds 50 percent of the cost of all its components. Components of foreign origin of the same class or kind as those that the agency determines are not mined, produced, or manufactured in sufficient and reasonably available commercial quantities of a satisfactory quality are treated as domestic. Scrap generated, collected, and prepared for processing in the United States is considered domestic; or

(ii) The end product is a COTS item.

* * * * *

■ 12. Revise section 25.100 to read as follows:

25.100 Scope of subpart.

(a) This subpart implements—

(1) The Buy American Act (41 U.S.C. 10a - 10d);

(2) Executive Order 10582, December 17, 1954; and

(3) Waiver of the component test of the Buy American Act for acquisitions of commercially available off-the-shelf (COTS) items in accordance with 41 U.S.C 431.

(b) It applies to supplies acquired for use in the United States, including supplies acquired under contracts set aside for small business concerns, if—

(1) The supply contract exceeds the micro-purchase threshold; or

(2) The supply portion of a contract for services that involves the furnishing of supplies (*e.g.*, lease) exceeds the micro-purchase threshold.

■ 13. Amend section 25.101 by revising paragraph (a)(2) to read as follows:

25.101 General.

(a) * * *

(2) The cost of domestic components must exceed 50 percent of the cost of all the components. In accordance with 41 U.S.C. 431, this component test of the Buy American Act has been waived for acquisitions of COTS items (see 12.505(a)).

* * * * *

■ 14. Revise section 25.200 to read as follows:

25.200 Scope of subpart.

(a) This subpart implements—

(1) The Buy American Act (41 U.S.C. 10a - 10d);

(2) Executive Order 10582, December 17, 1954; and

(3) Waiver of the component test of the Buy American Act for acquisitions of commercially available off-the-shelf (COTS) items in accordance with 41 U.S.C. 431.

(b) It applies to contracts for the construction, alteration, or repair of any public building or public work in the United States.

PART 52—SOLICITATION PROVISIONS AND CONTRACT CLAUSES

■ 15. Amend section 52.212–3 by—

■ a. Revising the date of clause;

■ b. Revising paragraph (f)(1); and

■ c. Revising paragraph (g)(1)(i) and the last sentence of paragraph (g)(1)(iii).

The revised text reads as follows:

52.212–3 Offeror Representations and Certifications—Commercial Items.

* * * * *

OFFEROR REPRESENTATIONS AND CERTIFICATIONS—COMMERCIAL ITEMS (FEB 2009)

* * * * *

(f) * * *

(1) The offeror certifies that each end product, except those listed in paragraph (f)(2) of this provision, is a domestic end product and that for other than COTS items, the offeror has considered components of unknown origin to have been mined, produced, or manufactured outside the United States. The offeror shall list as foreign end products those end products manufactured in the United States that do not qualify as domestic end products, *i.e.*, an end product that is not a COTS item and does not meet the component test in paragraph (2) of the definition ''domestic end product.'' The terms ''commercially available off-the-shelf (COTS) item,'' ''component,'' ''domestic end product,'' ''end product,'' ''foreign end product,'' and ''United States'' are defined in the clause of this solicitation entitled ''Buy American Act—Supplies.''

* * * * *

(g)(1) * * *

(i) The offeror certifies that each end product, except those listed in paragraph (g)(1)(ii) or (g)(1)(iii) of this provision, is a domestic end product and that for other than COTS items, the offeror has considered components of unknown origin to have been mined, produced, or manufactured outside the United States. The terms ''Bahrainian or Moroccan end product,'' ''commercially available off-the-shelf (COTS) item,'' ''component,'' ''domestic end product,'' ''end product,'' ''foreign end product,'' ''Free Trade Agreement country,'' ''Free Trade Agreement country end product,'' ''Israeli end product,'' and ''United States'' are defined in the clause of this solicitation entitled ''Buy American Act-Free Trade Agreements-Israeli Trade Act.''

* * * * *

(iii) * * * The offeror shall list as other foreign end products those end products manufactured in the United States that do not qualify as domestic end products, *i.e.*, an end product that is not a COTS item and does not meet the component test in paragraph (2) of the definition of ''domestic end product.''

* * * * *

(End of provision)

■ 16. Amend section 52.212–5 by revising the date of the clause and paragraph (b)(27); by removing from paragraph (b)(30) ''(June 2003)'' and adding ''(FEB 2009)'' in its place; and by removing from paragraph (b)(31)(i) ''(Aug 2007)'' and adding ''(FEB 2009)'' in its place. The revised text reads as follows:

52.212–5 Contract Terms and Conditions Required to Implement Statutes or Executive Orders—Commercial Items.

* * * * *

CONTRACT TERMS AND CONDITIONS REQUIRED TO IMPLEMENT STATUTES OR EXECUTIVE ORDERS—COMMERCIAL ITEMS (FEB 2009)

* * * * *

____ (b)(27)(i) 52.223–9, Estimate of Percentage of Recovered Material Content for EPA-Designated Items (May 2008) (42 U.S.C. 6962(c)(3)(A)(ii)). (Not applicable to the acquisition of commercially available off-the-shelf items.)

____ (ii) Alternate I (May 2008) of 52.223–9 (42 U.S.C. 6962(i)(2)(C)). (Not applicable to the acquisition of commercially available off-the-shelf items.)

* * * * *

(End of clause)

52.213–4 [Amended]

■ 17. Amend section 52.213–4 by removing from the clause heading ''(Dec 2008)'' and adding ''(FEB 2009)'' in its place; and by removing from paragraph (b)(1)(ix) ''(June 2003)'' and adding ''(FEB 2009)'' in its place.

■ 18. Amend section 52.225–1 by revising the date of the clause; by adding in paragraph (a), in alphabetical order, the definition ''Commercially available off-the-shelf (COTS) item'' and revising the definition ''Domestic end product''; and by revising paragraph (b) to read as follows:

52.225–1 Buy American Act—Supplies.

* * * * *

BUY AMERICAN ACT—SUPPLIES (FEB 2009)

(a) *Definitions.* * * *

Commercially available off-the-shelf (COTS) item— (1) Means any item of supply (including construction material) that is—

(i) A commercial item (as defined in paragraph (1) of the definition at FAR 2.101);

(ii) Sold in substantial quantities in the commercial marketplace; and

(iii) Offered to the Government, under a contract or subcontract at any tier, without modification, in the same form in which it is sold in the commercial marketplace; and

(2) Does not include bulk cargo, as defined in section 3 of the Shipping Act of 1984 (46 U.S.C. App. 1702), such as agricultural products and petroleum products.

* * * * *

Domestic end product means—

(1) An unmanufactured end product mined or produced in the United States;

(2) An end product manufactured in the United States, if—

(i) The cost of its components mined, produced, or manufactured in the United States exceeds 50 percent of the cost of all its components. Components of foreign origin of the same class or kind as those that the agency determines are not mined, produced, or manufactured in sufficient and reasonably available commercial quantities of a satisfactory quality are treated as domestic. Scrap generated, collected, and prepared for processing in the United States is considered domestic; or

(ii) The end product is a COTS item.

* * * * *

(b) The Buy American Act (41 U.S.C. 10a - 10d) provides a preference for domestic end products for supplies acquired for use in the United States. In accordance with 41 U.S.C. 431, the component test of the Buy American Act is waived for an end product that is a COTS item (See 12.505(a)(1)).

* * * * *

(End of clause)

■ 19. Amend section 52.225–2 by revising the date of the provision and paragraph (a) to read as follows:

52.225–2 Buy American Act Certificate.

* * * * *

BUY AMERICAN ACT CERTIFICATE (FEB 2009)

(a) The offeror certifies that each end product, except those listed in paragraph (b) of this provision, is a domestic end product and that for other than COTS items, the offeror has considered components of unknown origin to have been mined, produced, or manufactured outside the United States. The offeror shall list as foreign end products those end products manufactured in the United States that do not qualify as domestic end products, *i.e.*, an end product that is not a COTS item and does not meet the component test in paragraph (2) of the definition of ''domestic end product.'' The terms ''commercially available off-the-shelf (COTS) item, '' ''component,'' ''domestic end product,'' ''end product,'' ''foreign end product,'' and ''United States'' are defined in the clause of this solicitation entitled ''Buy American Act—Supplies.''

* * * * *

(End of provision)

■ 20. Amend section 52.225–3 by revising the date of the clause; in paragraph (a), by adding, in alphabetical order, the definition ''Commercially available off-the-shelf (COTS) item'' and revising the definition ''Domestic end product''; and by revising paragraph (c) to read as follows:

52.225–3 Buy American Act—Free Trade Agreements—Israeli Trade Act.

* * * * *

BUY AMERICAN ACT—FREE TRADE AGREEMENTS—ISRAELI TRADE ACT (FEB 2009)

(a) *Definitions.* * * *

* * * * *

Commercially available off-the-shelf (COTS) item— (1) Means any item of supply (including construction material) that is—

(i) A commercial item (as defined in paragraph (1) of the definition at FAR 2.101);

(ii) Sold in substantial quantities in the commercial marketplace; and

(iii) Offered to the Government, under a contract or subcontract at any tier, without modification, in the same form in which it is sold in the commercial marketplace; and

(2) Does not include bulk cargo, as defined in section 3 of the Shipping Act of 1984 (46 U.S.C. App. 1702), such as agricultural products and petroleum products.

* * * * *

Domestic end product means—

(1) An unmanufactured end product mined or produced in the United States;

(2) An end product manufactured in the United States, if—

(i) The cost of its components mined, produced, or manufactured in the United States exceeds 50 percent of the cost of all its components. Components of foreign origin of the same class or kind as those that the agency determines are not mined, produced, or manufactured in sufficient and reasonably available commercial quantities of a satisfactory quality are treated as domestic. Scrap generated, collected, and prepared for processing in the United States is considered domestic; or

(ii) The end product is a COTS item.

* * * * *

(c) *Delivery of end products.* The Buy American Act (41 U.S.C. 10a - 10d) provides a preference for domestic end products for supplies acquired for use in the United States. In accordance with 41 U.S.C. 431, the component test of the Buy American Act is waived for an end product that is a COTS item (See 12.505(a)(1)). In addition, the Contracting Officer has determined that FTAs (except the Bahrain and Morocco FTAs) and the Israeli Trade Act apply to this acquisition. Unless otherwise specified, these trade agreements apply to all items in the Schedule. The Contractor shall deliver under this contract only domestic end products except to the extent that, in its offer, it specified delivery of foreign end products in the provision entitled ''Buy American Act—Free Trade Agreements—Israeli Trade Act Certificate.'' If the Contractor specified in its offer that the Contractor would supply a Free Trade Agreement country end product (other than a Bahrainian or Moroccan end product) or an Israeli end product, then the Contractor shall supply a Free Trade Agreement country end product (other than a Bahrainian or Moroccan end product), an Israeli end product or, at the Contractor's option, a domestic end product.

* * * * *

(End of clause)

■ 21. Amend section 52.225–4 by revising the date of the provision and paragraphs (a) and (c) to read as follows:

52.225–4 Buy American Act—Free Trade Agreements—Israeli Trade Act Certificate.

* * * * *

BUY AMERICAN ACT—FREE TRADE AGREEMENTS—ISRAELI TRADE ACT CERTIFICATE (FEB 2009)

(a) The offeror certifies that each end product, except those listed in paragraph (b) or (c) of this provision, is a domestic end product and that for other than COTS items, the offeror has considered components of unknown origin to have been mined, produced, or manufactured outside the United States. The terms ''Bahrainian or Moroccan end product,'' ''commercially available off-the-shelf (COTS) item,'' ''component,'' ''domestic end product,'' ''end product,'' ''foreign end product,'' ''Free Trade Agreement country,'' ''Free Trade Agreement country end product,'' ''Israeli end product,'' and ''United States'' are defined in the clause of this solicitation entitled ''Buy American Act—Free Trade Agreements—Israeli Trade Act.''

* * * * *

(c) The offeror shall list those supplies that are foreign end products (other than those listed in paragraph (b) of this provision) as defined in the clause of this solicitation entitled ''Buy American Act—Free Trade Agreements—Israeli Trade Act.'' The offeror shall list as other foreign end products those end products manufactured in the United States that do not qualify as domestic end products, *i.e.*, an end product that is not a COTS item and does not meet the component test in paragraph (2) of the definition of ''domestic end product.''

Other Foreign End Products:

LINE ITEM NO. COUNTRY OF ORIGIN

_____ _____

_____ _____

_____ _____

[List as necessary]

* * * * *

(End of provision)

■ 22. Amend section 52.225–9 by revising the date of the clause; in paragraph (a), by adding, in alphabetical order, the definition ''Commercially available off-the-shelf (COTS) item'' and revising the definition ''Domestic construction material''; and by revising paragraph (b)(1) to read as follows:

52.225–9 Buy American Act—Construction Materials.

* * * * *

BUY AMERICAN ACT—CONSTRUCTION MATERIALS (FEB 2009)

(a) *Definitions.* * * *

Commercially available off-the-shelf (COTS) item— (1) Means any item of supply (including construction material) that is—

(i) A commercial item (as defined in paragraph (1) of the definition at FAR 2.101);

(ii) Sold in substantial quantities in the commercial marketplace; and

(iii) Offered to the Government, under a contract or subcontract at any tier, without modification, in the same form in which it is sold in the commercial marketplace; and

(2) Does not include bulk cargo, as defined in section 3 of the Shipping Act of 1984 (46 U.S.C. App. 1702), such as agricultural products and petroleum products.

* * * * *

Domestic construction material means—

(1) An unmanufactured construction material mined or produced in the United States;

(2) A construction material manufactured in the United States, if—

(i) The cost of its components mined, produced, or manufactured in the United States exceeds 50 percent of the cost of all its components. Components of foreign origin of the same class or kind for which nonavailability determinations have been made are treated as domestic; or

(ii) The construction material is a COTS item.

* * * * *

(b) *Domestic preference.* (1) This clause implements the Buy American Act (41 U.S.C. 10a–10d) by providing a preference for domestic construction material. In accordance with 41 U.S.C. 431, the component test of the Buy American Act is waived for construction material that is a COTS item (See FAR 12.505(a)(2)). The Contractor shall use only domestic construction material in performing this contract, except as provided in paragraphs (b)(2) and (b)(3) of this clause.

* * * * *

(End of clause)

■ 23. Amend section 52.225–10 by revising the date of the provision and paragraph (a) to read as follows:

52.225–10 Notice of Buy American Act Requirement—Construction Materials.

* * * * *

NOTICE OF BUY AMERICAN ACT REQUIREMENT—CONSTRUCTION MATERIALS (FEB 2009)

(a) *Definitions.* ''Commercially available off-the-shelf (COTS) item,'' ''construction material,'' ''domestic construction material,'' and ''foreign construction material,'' as used in this provision, are defined in the clause of this solicitation entitled ''Buy American Act—Construction Materials'' (Federal Acquisition Regulation (FAR) clause 52.225–9).

* * * * *

(End of provision)

■ 24. Amend section 52.225–11 by—

■ a. Revising the date of the clause;

■ b. In paragraph (a), by adding, in alphabetical order, the definition ''Commercially available off-the-shelf (COTS) item'' and revising the definition ''Domestic construction material'';

■ c. Revising paragraph (b)(1); and

■ d. Revising the date of Alternate I and in paragraph (b)(1) adding a new second sentence to read as follows:

52.225–11 Buy American Act—Construction Materials Under Trade Agreements.

* * * * *

BUY AMERICAN ACT—CONSTRUCTION MATERIALS UNDER TRADE AGREEMENTS (FEB 2009)

(a) *Definitions.* * * *

* * * * *

Commercially available off-the-shelf (COTS) item— (1) Means any item of supply (including construction material) that is—

(i) A commercial item (as defined in paragraph (1) of the definition at FAR 2.101);

(ii) Sold in substantial quantities in the commercial marketplace; and

(iii) Offered to the Government, under a contract or subcontract at any tier, without modification, in the same form in which it is sold in the commercial marketplace; and

(2) Does not include bulk cargo, as defined in section 3 of the Shipping Act of 1984 (46 U.S.C. App. 1702), such as agricultural products and petroleum products.

* * * * *

Domestic construction material means—

(1) An unmanufactured construction material mined or produced in the United States;

(2) A construction material manufactured in the United States, if—

(i) The cost of its components mined, produced, or manufactured in the United States exceeds 50 percent of the cost of all its components. Components of foreign origin of the same class or kind for which nonavailability determinations have been made are treated as domestic; or

(ii) The construction material is a COTS item.

* * * * *

(b) *Construction materials.* (1) This clause implements the Buy American Act (41 U.S.C. 10a–10d) by providing a preference for domestic construction material. In accordance with 41 U.S.C. 431, the component test of the Buy American Act is waived for construction material that is a COTS item (See FAR 12.505(a)(2)). In addition, the Contracting Officer has determined that the WTO GPA and Free Trade Agreements (FTAs) apply to this acquisition. Therefore, the Buy American Act restrictions are waived for designated county construction materials.

* * * * *

Alternate I (FEB 2009). * * *

* * * * *

(b) *Construction materials.* (1) * * * In accordance with 41 U.S.C. 431, the component test of the Buy American Act is waived for construction material that is a COTS item (See FAR 12.505(a)(2)). * * *

* * * * *

■ 25. Amend section 52.225–12 by revising the date of the provision and revising paragraph (a) to read as follows:

52.225–12 Notice of Buy American Act Requirement—Construction Materials Under Trade Agreements.

* * * * *

NOTICE OF BUY AMERICAN ACT REQUIREMENT—CONSTRUCTION MATERIALS UNDER TRADE AGREEMENTS (FEB 2009)

(a) *Definitions.* ''Commercially available off-the-shelf (COTS) item,'' ''construction material,'' ''designated country construction material,'' ''domestic construction material,'' and ''foreign construction material,'' as used in this provision, are defined in the clause of this solicitation entitled ''Buy American Act—Construction Materials Under Trade Agreements'' (Federal Acquisition Regulation (FAR) clause 52.225–11).

* * * * *

(End of provision)

[FR Doc. E9–551 Filed 1–14–09; 8:45 am]

BILLING CODE 6820–EP–S

DEPARTMENT OF DEFENSE

GENERAL SERVICES ADMINISTRATION

NATIONAL AERONAUTICS AND SPACE ADMINISTRATION

48 CFR Parts 4, 15, 17, 22, and 52

[FAC 2005–30; FAR Case 2001–004; Item III; Docket 2007–0001, Sequence 6]

RIN 9000–AK82

Federal Acquisition Regulation; FAR Case 2001–004, Exemption of Certain Service Contracts from the Service Contract Act (SCA)

AGENCIES: Department of Defense (DoD), General Services Administration (GSA), and National Aeronautics and Space Administration (NASA).

ACTION: Final rule.

SUMMARY: The Civilian Agency Acquisition Council and the Defense Acquisition Regulations Council (Councils) have adopted as final, with changes, the interim rule which amended the Federal Acquisition Regulation (FAR) to revise the current SCA exemption and to add an SCA exemption for contracts for certain

additional services that meet specific criteria.

DATES: *Effective Date*: February 17, 2009.

FOR FURTHER INFORMATION CONTACT: Mr. Ernest Woodson, Procurement Analyst, at (202) 501–3775 for clarification of content. For information pertaining to status or publication schedules, contact the FAR Secretariat at (202) 501–4755. Please cite FAC 2005–30, FAR case 2001–004.

SUPPLEMENTARY INFORMATION:

A. Background

The Wage and Hour Division of the U.S. Department of Labor's (DoL) Employment Standards Administration, issued a final rule, published in the **Federal Register** at 66 FR 5327, January 18, 2001, amending the regulations at 29 CFR part 4 to exempt certain contracts for services meeting specific criteria from coverage under the SCA. The Councils opened FAR Case 2001–004 to implement the DoL rule.

The Councils published an interim rule in the **Federal Register** at 72 FR 63076 on November 7, 2007. The public comment period closed on January 7, 2008. The Councils received comments from 4 commenters (one commenter submitted 4 separate responses).

1. Non-statutory certifications.

The respondent is concerned about additional non-statutory certifications.

Response: These certifications are imposed by the Secretary of Labor as a condition for the Secretary granting the exemptions. The certifications are found in DoL regulations at 29 CFR 4.123(e)(1)(ii)(D) and (e)(2)(ii)(G). The FAR rule implements the DoL requirements for certification by the prime contractor with respect to compliance with the DoL conditions for exemption from the SCA. The certification at FAR 52.222–48 was already required. In accordance with FAR 1.107, the Administrator of the Office of Federal Procurement Policy approved this non-statutory certification and the new non-statutory certification at FAR 52.222–52 because these certifications provide the basis for determining applicability of the SCA to the acquisition. When certain conditions are met, the certifications are necessary in order to exempt contracts for maintenance, calibration, or repair of certain equipment (FAR 52.222–48) and contracts for certain services (FAR 52.222–52) from the application of the SCA. The certifications are necessary to encourage broader participation in Government procurement by companies doing business in the commercial sector, and reinforce the Government's commitment to reduce Government—unique terms and conditions, without compromising the purpose of the SCA to protect prevailing labor standards. Without the certifications from the contractor, the DoL conditions for exemption would not be met, and all contractors would be required to comply with the SCA and, if the contract exceeds $2,500, the appropriate DoL wage determination.

2. *Existing conditions for exemption for contracts for maintenance, calibration or repair of certain equipment (22.1003–4(c)(2)).* Paragraph 22.1003–4(c)(2)(i) sets forth the condition that ''the items of equipment to be serviced under the contract are used regularly for other than Government purposes and are sold or traded by the contractor in substantial quantities to the general public in the course of normal business operations.''

One respondent questions if this means that the condition can be met only if the contractor that sold or traded the equipment is also the contractor performing the ''maintenance, calibration, or repair services?''

Response: The respondent's interpretation is correct. This is existing FAR text that comes from the DoL rule at 29 CFR 4.123(e)(1)(ii)(A).

3. *DoL determination after award (22.1003–4(c)(4)(ii)).*

One respondent suggests that the wording at FAR 22.1003–4(c)(4)(ii) should be the same as the wording at FAR 22.1003–4(d)(4)(ii).

Response: Since the FAR at 22.1003–4(c)(4)(ii) and 22.1003–4(d)(4)(ii) is based on the DoL rule at 29 CFR 4.123(e)(1)(iv) and 29 CFR 4.123(e)(2)(iii), and there is no discrepancy between these two paragraphs in the DoL rule, then they should read the same in the FAR rule. The suggested changes have been made to make the FAR paragraphs read the same, except that the run-on sentence has been corrected in 22.1003–4(d)(4)(ii), rather than repeating it in 22.1003–4(c)(4)(ii).

4. New exemptions for contracts for certain services (22.1003–4(d)(1)). Paragraph 22.1003–4(d)(1)(i) provides exemption for ''Automobile or other vehicle (*e.g.*, aircraft) maintenance services (other than contracts or subcontracts to operate a Government motor pool or similar facility).''

• One respondent wants it indicated with more certainty, that aircraft maintenance services are covered.

• One respondent requests a definition of ''maintenance services.''

• One respondent wants to know what does ''similar facility'' mean? Is a contractor owned and operated facility, such as a depot or hangar outfitted for commercial aircraft maintenance and repair work a similar facility? The respondent suggests using the phrase ''Government facility performing automobile maintenance or repair services'' instead of ''Government motor pool or similar facility.''

Response:

• Specifically listing aircraft maintenance services as an example provides complete certainty. This specifically reflects the DoL regulations at 29 CFR 4.123(e)(2)(i).

• ''Maintenance services'' is a widely used commercial term that should not require further definition. Since the FAR is implementing the DoL rule, the Councils decided not provide a definition that might inadvertently change the intent of the DoL rule.

• The FAR is implementing the DoL rule. The suggested rewrite would change the meaning of the DoL rule.

5. *Inconsistencies between wording of new exemptions and existing exemptions (22.1003–4(c)(1) and (d)(1)).* For example, 22.1003–4(d)(1)(i) refers only to ''Automobile or other vehicle (*e.g.*, aircraft) maintenance services'' as qualifying for the exemption, whereas 22.1003–4(d)(1)(iv) refers to ''maintenance, calibration, repair, and/or installation ... services for all types of equipment where the services are obtained.''

One respondent recommends making the language consistent by using the terms ''maintenance, calibration, repair, and/or installation services.''

Response: The Councils cannot change in the FAR the exemptions provided by DoL in its rule (29 CFR 4.123(e)(2)(i)(A) and (D)).

6. *Conditions for new exemptions (22.1003–4(d)(2)).*

• One respondent notes the condition in paragraph 22.1003–4(d)(2)(i) that—

''(A) The contract will be awarded on a sole-source basis; or

(B) Except for services identified in paragraph (d)(1)(iv) of this subsection, the contractor will be selected for award based on other factors in addition to price or cost, with the combination of other factors at least as important as price or cost in selecting the contractor.''

• The respondent requests transparency in this area by announcing the relative weighting of all of the source selection factors in the Federal Business Opportunities announcement.

Response: FAR 15.101–1 states that when using a tradeoff process, the following apply:

(1) All evaluation factors and significant subfactors that will affect contract award and their relative importance shall be clearly stated in the solicitation; and

(2) The solicitation shall state whether all evaluation factors other than cost or price,

when combined, are significantly more important than, approximately equal to, or significantly less important than cost or price.

It is outside the scope of this case to revise this policy. The information provided is sufficient to know whether the combination of other factors at least as important as price or cost in selecting the contractor.

• One respondent notes the condition in paragraph 22.1003–4(d)(2)(iv) that ''Each service employee who will perform the services under the contract will spend only a small portion of his or her time (a monthly average of less than 20 percent of the available hours on an annualized basis, or less than 20 percent of available hours during the contract period if the contract period is less than a month) servicing the Government contract.'' This requirement to have the capability of tracking the percentage of time each employee spends on Government work is a problem for contractors that meet the other criteria.

Response: This condition is imposed by the DoL rule (29 CFR 4.123(e)(2)(ii)(D)). The Councils do not have the authority to change the conditions imposed by the DoL.

• One respondent notes the additional conditions that apply to the new exemptions and recommends their deletion to avoid unnecessary confusion and complexity for contractors and contracting officers.

Response: See prior response.

• One respondent considers paragraph 22.1003–4(d)(2)(vi) confusing, since it is unclear when an ''advance'' contracting officer determination of offeror compliance would be made and whether the determination will be a formal determination and finding per FAR 1.701 or something less. This respondent suggests the following replacement language:

''The Contracting Officer determines prior to award, but after receipt of offers based on the contract requirements, that the conditions for a certified exemption in paragraph (d)(2)(ii) through (v) can be met by an offeror.''

Response: This condition is from the DoL rule (29 CFR 4.123(e)(2)(ii)(F)). In the DoL rule this clearly means before the solicitation is issued, because the DoL rule continues on ''If upon receipt of offers, the contracting officer finds that he or she did not correctly determine ....'' This is implemented through the positive statement at 22.1003–4(d)(3)(ii)(B) in combination with the results at (d)(3)(iii) if the conditions are not met. The Councils have added ''before issuing the solicitation'' at (vi) to clarify the FAR rule.

• Paragraph (vii) requires the following:

''(A) The apparent successful offeror certifies that the conditions in paragraphs (d)(2)(ii) through (v) will be met; and

(B) For other than sole source awards, the contracting officer determines that the same certification is obtained from substantially all other offerors that are—

(1) In the competitive range, if discussions are to be conducted (see FAR 15.306(c)); or

(2) Considered responsive, if award is to be made without discussions (see FAR 15.306(a)).''

• One respondent requests clarification of the term ''substantially all.'' One respondent is concerned about the meaning of ''substantially all'' other offerors. She runs through several scenarios, considering if there are only 2 or 3 offerors, what would ''substantially all'' mean. She recommends that only the apparently successful offeror should have to certify.

Response: This term was left undefined to provide maximum flexibility to contracting officers. The Councils acknowledge the respondent's concerns, but the FAR rule must follow the conditions set by DoL for use of these new exemptions.

• One respondent questions how far down the supply chain the SCA compliance test and certifications must go.

Response: The flowdown requirement in the clauses at 52.222–52 and 52.222–54 each require that the contractor must flow down the clause to any subcontract for services for which the exemption is being claimed.

• The same respondent also objects to use of the term ''responsive'' at subparagraph (vii)(B)(2) (also appears at subparagraph (d)(3)(ii)(B)(2)). The respondent states that this term is a legacy term of art used in the Sealed Bidding process to describe an offeror's statement of affirmative compliance with (or lack of exception to) all the terms and conditions of a formally advertised procurement. The respondent suggest the following:

''(2) Considered compliant with the Government's requirements (see FAR 15.306(a)).''

Response: The term ''responsive'' is not just a legacy term from Part 14, but is used in many other FAR parts (1, 7, 8, 9, 19, 22, 37, and 50) to describe an offer that meets the Government requirements. Although the term ''compliant'' is used in many places in the FAR, the Councils did not find any example in the FAR of an offer being described as ''compliant.''

7. *Contract award or resolicitations (new exemptions) (22.1003–4(d)(3)).* Paragraph (ii)(C) states a condition for award without the otherwise applicable SCA clauses is that ''The contracting officer has no reason to doubt the certification.''

• One respondent is concerned that there is a lack of definition or standard for ''no reason to doubt'' and that it does not appear to be in the best interests of the acquisition community to allow a decision to cancel a solicitation to hinge on the concept of doubt.

Response: The FAR rule implements the DoL rule. The DoL rule requires that ''If the contracting officer or prime contractor has reason to doubt the validity of the certification, SCA stipulations shall be included in the prime contract or subcontract.'' (29 CFR 4.123(e)(2)(ii)(G))

• One respondent is concerned that this resolicitation process could, in some cases, unduly increase the workload of the contracting officer.

Response: The FAR rule implements the DoL rule and follows the conditions set by DoL for use of these new exemptions.

8. *DoL determination (new exemptions) (22.1003–4(d)(4)).* One respondent states that this paragraph provides for a post-award determination of some type by the DoL, not the contracting agency, at any time during contract performance. The respondent suggests that exemption compliance over time will be challenging, and that the interim rule should provide a ''grace period'' in which the prime or the subcontractor could remedy any compliance shortfalls.

Response: The DoL regulations require that when the DoL discovers and determines, whether before or subsequent to a contract award, that a contracting agency made an erroneous determination that the SCA did not apply to a particular procurement and/or failed to include an appropriate wage determination in a covered contract, the contracting agency, within 30 days of notification by DoL, shall include in the contract the stipulations contained in 29 CFR 4.6 and any applicable wage determination issued by the DoL Administrator or his authorized representative through the exercise of any and all authority that may be needed including, where necessary, its authority to negotiate or amend, its authority to pay any necessary additional costs, and its authority under any contract provision authorizing changes, cancellation, and termination. With respect to any contract subject to section 10 of the Act, the DoL Administrator may require retroactive application of such wage determination (29 CFR 4.5(c)(2)).

The FAR rule implements the DoL requirements. It is up to DoL whether it

would allow time for correction of a compliance shortfall. The DoL regulations do not contemplate such a process.

9. *Exceptions (new exemptions) (FAR 22.1003–4(d)(5)).*

Paragraph (5)(iii) provides that the new exemptions do not apply to solicitations and contracts that are subject to section 4(c) of the SCA.

One respondent interprets this to mean that any contract that has now or ever contained SCA clauses can never be exempt in future contracts from the SCA.

Response: Section 4(c) of the SCA reads as follows:

(c) Predecessor contracts; employees' wages and fringe benefits No contractor or subcontractor under a contract, which succeeds a contract subject to this chapter and under which substantially the same services are furnished, shall pay any service employee under such contract less than the wages and fringe benefits, including accrued wages and fringe benefits, and any prospective increases in wages and fringe benefits provided for in a collective-bargaining agreement as a result of arm's-length negotiations, to which such service employees would have been entitled if they were employed under the predecessor contract: Provided, That in any of the foregoing circumstances such obligations shall not apply if the Secretary finds after a hearing in accordance with regulations adopted by the Secretary that such wages and fringe benefits are substantially at variance with those which prevail for services of a character similar in the locality.

Section 4(c) is different from the regular wage determination and this provision applies to a situation where collective bargaining agreement union agreements are involved. Many SCA covered contracts involve annual, recurring procurements of the same services. When a collective bargaining agreement governs the wage rates and fringe benefits of service workers employed to perform work called for by an incumbent SCA covered contract, the wage determination to be issued for the successor contract must reflect the wage and fringe benefit provisions of the predecessor, contractor's collective bargaining agreement, including any accrued or prospective increases contained therein.

The successor contractor obligation to comply with the provisions of the collective bargaining agreement under Section 4(c) of the SCA extend only for the immediate successor contract period of performance. Thus, if the predecessor contractor was signatory to a collective bargaining agreement, the successor contractor would be required to comply with those provisions but would not be required to enter into a collective bargaining agreement. At the end of that first period of performance, the successor contractor would be subject to a general wage determination and Section 4(c) would no longer be in effect.

10. Incorrect references (22.1003–5 and 22.1003–6).

Several respondents pointed out that the references at 22.1003–5 and 22.1003–6 to ''22.1003(c)(1) and (d)(1)(iv)'' should both read ''22.1003–4(c)(1) and (d)(1)(iv).''

Response: The Councils concur. The draft final rule has been amended.

11. *Prescriptions for use of provisions and clauses (22.1006).*

One respondent had several suggestions to clarify the prescriptions for the use of provisions and clauses.

1. Certification provision 52.222–48 will not be in solicitation if ORCA is used, so use of SCA clause in contract can not be tied to presence of certification provision in solicitation. The same concern applies to 52.222–52, if it is incorporated into ORCA.

The respondent suggests several solutions for drafting the prescriptions.

Response: The Councils recognize the problem, and have adopted a different solution. The FAR drafting conventions prohibit prescribing a clause in more than one place, and normally there is a separate prescription for each provision or clause.

There is a widespread problem, extending beyond this single case, that there is no indication in FAR 52.204–8 as to which representations or certifications are applicable to the particular solicitation. This is unlike FAR 52.212–3, which either gives the criteria for applicability, or requires that the contracting officer indicate the applicability of some of the representations and certifications (*e.g.*, FAR 52.212–3(k)). Because it is essential that the contracting officer have the ability to indicate the applicability of FAR 52.222–48 or 52.222–52 to a solicitation, the Councils have agreed to an overall fix to the FAR clause at 52.204–8, indicating for each representation or certification either its general applicability, if that is sufficient, or in more complex cases, requiring the contracting officer to specifically indicate if the representation or certification is applicable.

Once this is accomplished, the inclusion of the clauses at FAR 52.222–51 and 52.222–53 can be tied to either the inclusion of 52.222–48 or 52.222–52 in the solicitation, or the indication of the applicability of the comparable certification in 52.204–8(c)(2) or 52.212–3(k).

2. Paragraph 22.1006(a)(2) does not directly contradict FAR 22.1003–4(c)(3) or (d)(3), but it is not totally consonant. One states that the contracting officer includes the SCA clause if the contracting officer determines it is appropriate to do so. The other states that the SCA clause is excluded, if the contracting officer determines that is it appropriate to do so.

Response: The Councils have revised FAR 22.1006(a)(2) to put it in terms of excluding the SCA clause when the contracting officer determines that the SCA does not apply, consistent with DoL regulations and other parts of the rule.

3. Reference at FAR 22.1003–4(d)(3)(iii) should be 22.1006(e)(3) not (e)(4).

Response: The Councils have made the correction.

4. Language at FAR 22.1006(e)(1) prescribing the use of 52.222–48 is unclear and at (e)(3), prescribing the use of 52.222–52 is unclear. One respondent interprets it as potentially applying to all contracts that contain the SCA clause, not just the targeted services.

Response: The phrase ''but the contract may be exempt from the Service Contract Act in accordance with 22.1003–4(c) 'or (d)''' was intended to target the specific services. If this is not sufficiently clear, the Councils have made the following revision. The use of ''and'' instead of ''but'' makes it clear that both conditions must be met.''

''(e)(1) The contracting officer shall insert the provision at 52.222–48, Exemption from Application of the Service Contract Act to Contracts for Maintenance, Calibration, or Repair of Certain Equipment—Certification, in solicitations that include the clause at 52.222–41, Service Contract Act of 1965 and the contract may be exempt from the Service Contract Act in accordance with 22.1003–4(c).''

* * * * *

(3) The contracting officer shall insert the provision at 52.222–52, Exemption from Application of the Service Contract Act to Contracts for Certain Services—Certification, in solicitations that include the clause at 52.222–41, Service Contract Act of 1965 and the contract may be exempt from the Service Contract Act in accordance with 22.1003–4(d).''

12. *Provisions and clauses*:

a. FAR 52.212–3, 52.222–48, 52.222–51, and 52.222–53. ''Or subcontractor in the case of an exempt subcontract.''

One respondent requests that the language that is included parenthetically in paragraph (a)(1) of the provisions at FAR 52.222–52, also be included in the provisions at 52.212–3(k)(1)(i) and 52.222–48(a)(1) as well as the clauses at 52.222–51(a) and 52.222–53(a).

Response: The Councils concur with inclusion of the phrase in the

provisions, because it is possible that a subcontractor may be exempt, and the term ''offeror'' does not include ''subcontractor.''

However, the Councils do not agree with inclusion of the parenthetical phrase in the clauses, because FAR 22.1001 defines ''contractor'' to include a subcontractor at any tier whose subcontract is subject to the provisions of the Act.

b. *FAR 52.212–5, correction of paragraph reference.*

One respondent points out the oversight to revise the paragraph reference in paragraph (e)(1) of the FAR clause 52.212–5.

Response: The Councils have made the correction.

c. *FAR 52.222–53, order of paragraphs.*

One respondent recommends reversal of paragraphs FAR 52.222–53(e)(1) and (e)(2) in order to put the more likely situation first—*i.e.*, award on the basis of other factors in addition to cost or price and that cost or price is of equal or lesser importance than the other factors. Further, the same respondent states that there is one particular type of service that allows award only on a sole source basis (FAR 22.1003–4(d)(1)(iv)-Maintenance, calibration, repair, and/or installation (where the installation is not subject to the Davis-Bacon Act, as provided in 29 CFR 4.116(c)(2)) services for all types of equipment where the services are obtained from the manufacturer or supplier of the equipment under a contract awarded on a sole source basis. Therefore, the respondent recommends that FAR paragraph 52.222–53(e)(2) address only this type of services.

Response: The Councils concur with the reversal of the paragraphs. However, the Councils do not agree that the new paragraph (e)(2) should address only the service at FAR 22.1003–4(d)(1)(iv). The DoL criteria allow any of the subcontract services to be purchased on a sole source basis (29 CFR 4.123((e)(2)(ii)(B)), not just the maintenance, etc. services that must be purchased sole source. Therefore the Councils have revised the subject paragraphs as follows:

''(e)(1) Except for services identified in FAR 22.1003–4(d)(1)(iv), the subcontractor for exempt services shall be selected for award based on other factors in addition to price or cost with the combination of other factors at least as important as price or cost; or

(2) A subcontract for exempt services shall be awarded on a sole source basis.''

13. *FAR Matrix.*

One respondent identified that the FAR matrix incorrectly referred to FAR 52.222–48 as a clause and states that it will go in section I. Although the matrix correctly identifies 52.222–52 as a provision, it incorrectly states that it will go in Section I. The same commenter also objects that these provisions should not be incorporated by reference because it requires a fill-in.

Response: Partially Concur. FAR 52.222–48 and 52.222–52 are provisions and belong in Section K. The FAR Matrix will be revised. The Councils disagree that a provision requiring a fill-in should not be incorporated by reference. See FAR 52.104(d).

This is not a significant regulatory action and, therefore, was not subject to review under Section 6(b) of Executive Order 12866, Regulatory Planning and Review, dated September 30, 1993. This rule is not a major rule under 5 U.S.C. 804.

B. Regulatory Flexibility Act

The Regulatory Flexibility Act, 5 U.S.C. 601, *et seq.*, applies to this final rule. The Councils prepared a Final Regulatory Flexibility Analysis (FRFA) that is summarized as follows:

This rule finalizes an interim rule with changes, to amend the Federal Acquisition Regulation to implement Department of Labor (DoL) regulation 29 CFR 4.123, Administrative limitations, variance, tolerances, and exemptions. Paragraph (e) of that regulations provides exemption for contracts for certain services that meet specific criteria.

The objective of the DoL final rule was to be more commercial-like, encourage broader participation in Government procurement by companies doing business in the commercial sector, and reinforce our commitment to reduce Government-unique terms and conditions, without compromising the purpose of the SCA to protect prevailing labor standards.

This final rule will have a positive economic impact on the small contractors and subcontractors that meet the exemption criteria to be exempt from the SCA for certain services, because it may provide additional opportunities for work on Federal projects; enable these contractors to compete in a more commercial-like environment, and alleviate the burden of complying with Government-unique terms and conditions for these types of contracts.

Pursuant to Section (4)(b) of the SCA, the Secretary of Labor may grant reasonable exemptions to the provisions of the SCA, but only in special circumstances where the exemption is necessary and proper in the public interest, and is in accord with the remedial purposes of the Act to protect prevailing labor standards.

There were no comments in response to the initial regulatory flexibility analysis.

This final rule will apply to all large and small entities that seek award of Federal service contracts in the service categories identified. The Councils relied on the DoL regulatory flexibility analysis (66 FR 5339), which determined that a majority of contracts affected by the proposed exemption would likely be performed by small businesses. FPDS does not provide an accurate estimate of the contracts potentially covered by the exemption, but DoL estimates that the total value of the exempt contracts could be relatively small, and that the SCA would no longer apply to only a relatively small number of contracts that currently contain SCA wage determination provisions.

The rule imposes no reporting, recordkeeping, or other information collection requirements that require the approval of the Office of Management and Budget under 44 U.S.C. 3501, *et seq.* This rule implements the Department of Labor Rule (66 FR 5327), which stated in the preamble that the DoL rule contained no reporting or recordkeeping requirements subject to the Paperwork Reduction Act of 1980 (Pub. L. 96–511). The DoL preamble stated further, that although offerors are required to certify that the criteria for exemption are met, the certifications can be submitted as part of the bid process and offerors are not required to maintain records to support the certification.

There are no practical alternatives that will accomplish the objectives of this rule. However, the exemption is expected to have a positive impact on small entities, because it does not contain any new reporting or recordkeeping or other compliance requirements applicable to small business. Rather, the exemption would relieve small businesses and other contractors from the requirements of the SCA on certain contracts.

Interested parties may obtain a copy of the FRFA from the FAR Secretariat. The FAR Secretariat has submitted a copy of the FRFA to the Chief Counsel for Advocacy of the Small Business Administration.

C. Paperwork Reduction Act

The Paperwork Reduction Act (Pub. L. 104–13) does not apply because the final rule does not impose or remove information collection requirements that require the approval of the Office of Management and Budget under 44 U.S.C. 3501, *et seq.* This final rule implements the DoL rule published in the **Federal Register** at 66 FR 5327, January 18, 2001, which stated in the preamble that the DoL rule contained no reporting or recordkeeping requirements subject to the Paperwork Reduction Act of 1980 (Pub. L. 96–511). The DoL preamble stated further, that although offerors are required to certify that the criteria for exemption are met, the certifications can be submitted as part of the bid process and offerors are not required to maintain records to support the certification.

List of Subjects in 48 CFR Parts 4, 15, 17, 22, and 52

Government procurement.

Dated: December 24, 2008.

Edward Loeb,

Acting Director, Office of Acquisition Policy.

Interim Rule Adopted as Final With Changes

■ Accordingly, the interim rule amending 48 CFR parts 4, 15, 17, 22, and 52 which was published in the **Federal Register** at 72 FR 63076 on November 7, 2007, is adopted as a final rule with the following changes:

■ 1. The authority citation for 48 CFR parts 4, 15, 22, and 52 continues to read as follows:

Authority: 40 U.S.C. 121(c); 10 U.S.C. chapter 137; and 42 U.S.C. 2473(c).

PART 4—ADMINISTRATIVE MATTERS

4.1201 [Amended]

■ 2. Amend section 4.1201 in paragraph (c) by removing ''52.204–8(c)'' and adding ''52.204–8(d)'' in its place.

■ 3. Amend section 4.1202 by—

■ a. Revising the introductory text;

■ b. Redesignating paragraphs (r) through (bb) as (s) through (cc) respectively; and

■ c. Adding new paragraph (r).

The revised and added text reads as follows:

4.1202 Solicitation provision and contract clause.

Except for commercial item solicitations issued under FAR Part 12, insert in solicitations the provision at 52.204–8, Annual Representations and Certifications. The contracting officer shall check the applicable provisions at 52.204–8(c)(2). When the clause at 52.204–7, Central Contractor Registration, is included in the solicitation, do not include the following representations and certifications:

* * * * *

(r) 52.222–52, Exemption from Application of the Service Contract Act to Contracts for Certain Services—Certification.

* * * * *

PART 15—CONTRACTING BY NEGOTIATION

15.102 [Amended]

■ 4. Amend section 15.102 in paragraph (b) by removing ''52.204–8(c)'' and adding ''52.204–8(d)'' in its place.

PART 22—APPLICATION OF LABOR LAWS TO GOVERNMENT ACQUISITION

■ 5. Amend section 22.1003–4 by—

■ a. Removing from paragraph (c)(3)(iii) ''22.1006(a)(2)'' and adding ''22.1006(a)'' in its place;

■ b. Revising paragraph (c)(4)(ii);

■ c. Revising paragraph (d)(2)(i) and revising the first sentence in paragraph (d)(2)(vi);

■ d. Removing from paragraph (d)(3)(i) ''22.1006(a)(2)'' and adding ''22.1006'' in its place, and revising paragraph (d)(3)(iii); and

■ e. Revising paragraph (d)(4)(ii).

■ The revised text reads as follows:

22.1003–4 Administrative limitations, variations, tolerances, and exemptions.

* * * * *

(c) * * *

(4) * * *

(ii) If the Department of Labor determines that any conditions in paragraph (c)(2) of this subsection have not been met with respect to a subcontract, the exemption shall be deemed inapplicable. The contractor may be responsible for ensuring that the subcontractor complies with the Act, effective as of the date of the subcontract award.

(d) * * *

(2) * * *

(i) (A) Except for services identified in paragraph (d)(1)(iv) of this subsection, the contractor will be selected for award based on other factors in addition to price or cost, with the combination of other factors at least as important as price or cost; or

(B) The contract will be awarded on a sole source basis.

* * * * *

(vi) The contracting officer (or contractor with respect to a subcontract) determines in advance before issuing the solicitation, based on the nature of the contract requirements and knowledge of the practices of likely offerors, that all or nearly all offerors will meet the conditions in paragraph (d)(2)(ii) through (v) of this subsection. * * *

* * * * *

(3) * * *

(iii) If the conditions in paragraph (d)(3)(ii) of this subsection are not met, then the contracting officer shall resolicit, amending the solicitation by removing the exemption provision from the solicitation as prescribed at 22.1006(e)(3). The contract will include the applicable Service Contract Act clause(s) as prescribed at 22.1006 and, if the contract will exceed $2,500, the appropriate Department of Labor wage determination (see 22.1007).

* * * * *

(4) * * *

(ii) If the Department of Labor determines that any conditions in paragraph (d)(2) of this subsection have not been met with respect to a subcontract, the exemption shall be deemed inapplicable. The contractor may be responsible for ensuring that the subcontractor complies with the Act, effective as of the date of the subcontract award.

* * * * *

22.1003–5 [Amended]

■ 6. Amend section 22.1003–5 in paragraph (k) by removing ''22.1003(c)(1)'' and adding ''22.1003–4(c)(1)'' in its place.

22.1003–6 [Amended]

■ 7. Amend section 22.1003–6 in paragraph (b)(2) by removing ''22.1003(c)(1)'' and adding ''22.1003–4(c)(1)'' in its place.

■ 8. Amend section 22.1006 by revising paragraphs (a) and (e) to read as follows:

22.1006 Solicitation provisions and contract clauses.

(a)(1) The contracting officer shall insert the clause at 52.222–41, Service Contract Act of 1965, in solicitations and contracts (except as provided in paragraph (a)(2) of this section) if the contract is subject to the Act and is—

(i) Over $2,500; or

(ii) For an indefinite dollar amount and the contracting officer does not know in advance that the contract amount will be $2,500 or less.

(2) The contracting officer shall not insert the clause at 52.222–41 (or any of the associated Service Contract Act clauses as prescribed in this section for possible use when 52.222–41 applies) in the resultant contract if—

(i) The solicitation includes the provision at—

(A) 52.222–48, Exemption from Application of the Service Contract Act to Contracts for Maintenance, Calibration, or Repair of Certain Equipment—Certification;

(B) 52.222–52, Exemption from Application of the Service Contract Act to Contracts for Certain Services—Certification; or

(C) Either of the comparable certifications is checked as applicable in the provision at 52.204–8(c)(2)(v) or (vi) or 52.212–3(k); and

(ii) The contracting officer has made the determination, in accordance with paragraphs (c)(3) or (d)(3) of subsection 22.1003–4, that the Service Contract Act does not apply to the contract. (In such case, insert the clause at 52.222–51, Exemption from Application of the Service Contract Act to Contracts for Maintenance, Calibration, or Repair of Certain Equipment—Requirements, or 52.222–53, Exemption from Application of the Service Contract Act to Contracts for Certain Services—Requirements, in

the contract, in accordance with the prescription at paragraph (e)(2)(ii) or (e)(4)(ii) of this subsection).

* * * * *

(e)(1) The contracting officer shall insert the provision at 52.222–48, Exemption from Application of the Service Contract Act to Contracts for Maintenance, Calibration, or Repair of Certain Equipment—Certification, in solicitations that—

(i) Include the clause at 52.222–41, Service Contract Act of 1965; and

(ii) The contract may be exempt from the Service Contract Act in accordance with 22.1003–4(c).

(2) The contracting officer shall insert the clause at 52.222–51, Exemption from Application of the Service Contract Act to Contracts for Maintenance, Calibration, or Repair of Certain Equipment—Requirements—

(i) In solicitations that include the provision at 52.222–48, or the comparable provision is checked as applicable in the clause at 52.204–8(c)(2)(v) or 52.212–3(k)(1); and

(ii) In resulting contracts in which the contracting officer has determined, in accordance with 22.1003–4(c)(3), that the Service Contract Act does not apply.

(3)(i) Except as provided in paragraph (e)(3)(ii) of this section, the contracting officer shall insert the provision at 52.222–52, Exemption from Application of the Service Contract Act to Contracts for Certain Services—Certification, in solicitations that—

(A) Include the clause at 52.222–41, Service Contract Act of 1965; and

(B) The contract may be exempt from the Service Contract Act in accordance with 22.1003–4(d).

(ii) When resoliciting in accordance with 22.1003–4(d)(3)(iii), amend the solicitation by removing the provision at 52.222–52 from the solicitation.

(4) The contracting officer shall insert the clause at 52.222–53, Exemption from Application of the Service Contract Act to Contracts for Certain Services—Requirements—

(i) In solicitations that include the provision at 52.222–52, or the comparable provision is checked as applicable in 52.204–8(c)(2)(vi) or 52.212–3(k)(2); and

(ii) In resulting contracts in which the contracting officer has determined, in accordance with 22.1003–4(d)(3), that the Service Contract Act does not apply.

* * * * *

PART 52—SOLICITATION PROVISIONS AND CONTRACT CLAUSES

■ 9. Amend section 52.204–8 by—

■ a. Revising the date of the provision;

■ b. Removing from paragraphs (b)(1) and (b)(2) ''paragraph (c)'' wherever it occurs, and adding ''paragraph (d)'' (four times) in its place; and

■ c. Redesignating paragraph (c) as paragraph (d), adding new paragraph (c), and revising the second sentence in newly designated paragraph (d).

■ The revised and added text reads as follows:

52.204–8 Annual Representations and Certifications.

* * * * *

ANNUAL REPRESENTATIONS AND CERTIFICATIONS (FEB 2009)

* * * * *

(c)(1) The following representations or certifications in ORCA are applicable to this solicitation as indicated:

(i) 52.203–2, Certificate of Independent Price Determination. This provision applies to solicitations when a firm-fixed-price contract or fixed-price contract with economic price adjustment is contemplated, unless—

(A) The acquisition is to be made under the simplified acquisition procedures in Part 13;

(B) The solicitation is a request for technical proposals under two-step sealed bidding procedures; or

(C) The solicitation is for utility services for which rates are set by law or regulation.

(ii) 52.203–11, Certification and Disclosure Regarding Payments to Influence Certain Federal Transactions. This provision applies to solicitations expected to exceed $100,000.

(iii) 52.204–3, Taxpayer Identification. This provision applies to solicitations that do not include the clause at 52.204–7, Central Contractor Registration.

(iv) 52.204–5, Women-Owned Business (Other Than Small Business). This provision applies to solicitations that—

(A) Are not set aside for small business concerns;

(B) Exceed the simplified acquisition threshold; and

(C) Are for contracts that will be performed in the United States or its outlying areas.

(v) 52.209–5, Certification Regarding Responsibility Matters. This provision applies to solicitations where the contract value is expected to exceed the simplified acquisition threshold.

(vi) 52.214–14, Place of Performance—Sealed Bidding. This provision applies to invitations for bids except those in which the place of performance is specified by the Government.

(vii) 52.215–6, Place of Performance. This provision applies to solicitations unless the place of performance is specified by the Government.

(viii) 52.219–1, Small Business Program Representations (Basic & Alternate I). This provision applies to solicitations when the contract will be performed in the United States or its outlying areas.

(A) The basic provision applies when the solicitations are issued by other than DoD, NASA, and the Coast Guard.

(B) The provision with its Alternate I applies to solicitations issued by DoD, NASA, or the Coast Guard.

(ix) 52.219–2, Equal Low Bids. This provision applies to solicitations when contracting by sealed bidding and the contract will be performed in the United States or its outlying areas.

(x) 52.222–22, Previous Contracts and Compliance Reports. This provision applies to solicitations that include the clause at 52.222–26, Equal Opportunity.

(xi) 52.222–25, Affirmative Action Compliance. This provision applies to solicitations, other than those for construction, when the solicitation includes the clause at 52.222–26, Equal Opportunity.

(xii) 52.222–38, Compliance with Veterans' Employment Reporting Requirements. This provision applies to solicitations when it is anticipated the contract award will exceed the simplified acquisition threshold and the contract is not for acquisition of commercial items.

(xiii) 52.223–1, Biobased Product Certification. This provision applies to solicitations that require the delivery or specify the use of USDA-designated items; or include the clause at 52.223–2, Affirmative Procurement of Biobased Products Under Service and Construction Contracts.

(xiv) 52.223–4, Recovered Material Certification. This provision applies to solicitations that are for, or specify the use of, EPA-designated items.

(xv) 52.225–2, Buy American Act Certificate. This provision applies to solicitations containing the clause at 52.225–1.

(xvi) 52.225–4, Buy American Act—Free Trade Agreements—Israeli Trade Act Certificate. (Basic, Alternate I, and Alternate II) This provision applies to solicitations containing the clause at 52.225–3.

(A) If the acquisition value is less than $25,000, the basic provision applies.

(B) If the acquisition value is $25,000 or more but is less than $50,000, the provision with its Alternate I applies.

(C) If the acquisition value is $50,000 or more but is less than $67,826, the provision with its Alternate II applies.

(xvii) 52.225–6, Trade Agreements Certificate. This provision applies to solicitations containing the clause at 52.225–5.

(xviii) 52.225–20, Prohibition on Conducting Restricted Business Operations in Sudan—Certification.

(xix) 52.226–2, Historically Black College or University and Minority Institution Representation. This provision applies to—

(A) Solicitations for research, studies, supplies, or services of the type normally acquired from higher educational institutions; and

(B) For DoD, NASA, and Coast Guard acquisitions, solicitations that contain the clause at 52.219–23, Notice of Price Evaluation Adjustment for Small Disadvantaged Business Concerns.

(2) The following certifications are applicable as indicated by the Contracting Officer:

[*Contracting Officer check as appropriate.*]

____(i) 52.219–19, Small Business Concern Representation for the Small Business Competitiveness Demonstration Program.

_____(ii) 52.219–21, Small Business Size Representation for Targeted Industry Categories Under the Small Business Competitiveness Demonstration Program.

_____(iii) 52.219–22, Small Disadvantaged Business Status.

_____(A) Basic.

_____(B) Alternate I.

_____(iv) 52.222–18, Certification Regarding Knowledge of Child Labor for Listed End Products.

_____(v) 52.222–48, Exemption from Application of the Service Contract Act to Contracts for Maintenance, Calibration, or Repair of Certain Equipment Certification.

_____(vi) 52.222–52 Exemption from Application of the Service Contract Act to Contracts for Certain Services—Certification.

_____(vii) 52.223–9, with its Alternate I, Estimate of Percentage of Recovered Material Content for EPA-Designated Products (Alternate I only).

_____(viii) 52.223–13, Certification of Toxic Chemical Release Reporting.

_____(ix) 52.227–6, Royalty Information.

_____ (A) Basic.

_____ (B) Alternate I.

_____(x) 52.227–15, Representation of Limited Rights Data and Restricted Computer Software.

(d) * * * After reviewing the ORCA database information, the offeror verifies by submission of the offer that the representations and certifications currently posted electronically that apply to this solicitation as indicated in paragraph (c) of this provision have been entered or updated within the last 12 months, are current, accurate, complete, and applicable to this solicitation (including the business size standard applicable to the NAICS code referenced for this solicitation), as of the date of this offer and are incorporated in this offer by reference (see FAR 4.1201); except for the changes identified below [*offeror to insert changes, identifying change by clause number, title, date*]. * * *

* * * * *

[End of provision]

■ 10. Amend section 52.212–3 by revising the date of the provision and paragraph (k)(1)(i) to read as follows:

52.212–3 Offeror Representations and Certifications—Commercial Items.

* * * * *

OFFEROR REPRESENTATIONS AND CERTIFICATIONS—COMMERCIAL ITEMS (FEB 2009)

* * * * *

(k) * * *

[ ](1) * * *

(i) The items of equipment to be serviced under this contract are used regularly for other than Governmental purposes and are sold or traded by the offeror (or subcontractor in the case of an exempt subcontract) in substantial quantities to the general public in the course of normal business operations;

* * * * *

[End of provision]

■ 11. Amend section 52.212–5 by—

■ a. Revising the date of the clause;

■ b. Revising paragraph (c)(6);

■ c. Removing from paragraph (e)(1) ''in paragraphs (e)(1)(i) through (xi) of this paragraph'' and adding ''in this paragraph (e)(1)'' in its place; and

■ d. Revising paragraph (e)(1)(x).

■ The revised text reads as follows:

52.212–5 Contract Terms and Conditions Required to Implement Statutes or Executive Orders—Commercial Items.

* * * * *

CONTRACT TERMS AND CONDITIONS REQUIRED TO IMPLEMENT STATUTES OR EXECUTIVE ORDERS—COMMERCIAL ITEMS (FEB 2009)

* * * * *

(C) * * *

(6) 52.222–53, Exemption from Application of the Service Contract Act to Contracts for Certain Services—Requirements (FEB 2009) (41 U.S.C. 351, *et seq.*).

* * * * *

(e)(1) * * *

(x) 52.222–53, Exemption from Application of the Service Contract Act to Contracts for Certain Services-Requirements (FEB 2009)(41 U.S.C. 351, *et seq.*).

* * * * *

[End of clause]

■ 12. Amend section 52.222–48 by revising the date of the provision and paragraph (a)(1) to read as follows:

52.222–48 Exemption from Application of the Service Contract Act to Contracts for Maintenance, Calibration, or Repair of Certain Equipment Certification.

* * * * *

EXEMPTION FROM APPLICATION OF THE SERVICE CONTRACT ACT TO CONTRACTS FOR MAINTENANCE, CALIBRATION, OR REPAIR OF CERTAIN EQUIPMENT CERTIFICATION (FEB 2009)

* * * * *

(a) * * *

(1) The items of equipment to be serviced under this contract are used regularly for other than Government purposes, and are sold or traded by the offeror (or subcontractor in the case of an exempt subcontractor) in substantial quantities to the general public in the course of normal business operations;

* * * * *

[End of provision]

■ 13. Amend section 52.222–53 by revising the date of the clause and paragraph (e) to read as follows:

52.222–53 Exemption from Application of the Service Contract Act to Contracts for Certain Services—Requirements.

* * * * *

EXEMPTION FROM APPLICATION OF THE SERVICE CONTRACT ACT TO CONTRACTS FOR CERTAIN SERVICES— REQUIREMENTS (FEB 2009)

* * * * *

(e)(1) Except for services identified in FAR 22.1003–4(d)(1)(iv), the subcontractor for exempt services shall be selected for award based on other factors in addition to price or cost with the combination of other factors at least as important as price or cost; or

(2) A subcontract for exempt services shall be awarded on a sole source basis.

* * * * *

[End of clause]

[FR Doc. E9–532 Filed 1–14–09; 8:45 am]

BILLING CODE 6820–EP–S

DEPARTMENT OF DEFENSE

GENERAL SERVICES ADMINISTRATION

NATIONAL AERONAUTICS AND SPACE ADMINISTRATION

48 CFR Parts 5, 6, and 24

[FAC 2005–30; FAR Case 2008–003; Item IV; Docket 2008–0001, Sequence 08]

RIN 9000–AL13

Federal Acquisition Regulation; FAR Case 2008–003, Public Disclosure of Justification and Approval Documents for Noncompetitive Contracts-Section 844 of the National Defense Authorization Act for Fiscal Year 2008

AGENCIES: Department of Defense (DoD), General Services Administration (GSA), and National Aeronautics and Space Administration (NASA).

ACTION: Interim rule with request for comments.

SUMMARY: The Civilian Agency Acquisition Council and the Defense Acquisition Regulations Council (Councils) have agreed on an interim rule amending the Federal Acquisition Regulation (FAR) to implement Section 844 of the National Defense Authorization Act for Fiscal Year 2008 ''Public Disclosure of Justification and Approval Documents for Noncompetitive Contracts'' (FY08 NDAA). Section 844 of the FY08 NDAA stipulates the requirements regarding the public availability of justification and approval documents after the award of Federal contracts, except for information exempt from public disclosure.

DATES: *Effective Date*: February 17, 2009.

Applicability Date: This interim rule applies to all contracts awarded from a 6.303–1 justification and approval document on or after the effective date.

Comment Date: Interested parties should submit written comments to the FAR Secretariat on or before March 16,

2009 to be considered in the formulation of a final rule.

ADDRESSES: Submit comments identified by FAC 2005–30, FAR case 2008–003, by any of the following methods:

• Regulations.gov: *http://www.regulations.gov.*Submit comments via the Federal eRulemaking portal by inputting ''FAR Case 2008–003'' under the heading ''Comment or Submission''. Select the link ''Send a Comment or Submission'' that corresponds with FAR Case 2008–003. Follow the instructions provided to complete the ''Public Comment and Submission Form''. Please include your name, company name (if any), and ''FAR Case 2008–003'' on your attached document.

• Fax: 202–501–4067.

• Mail: General Services Administration, Regulatory Secretariat (VPR), 1800 F Street, NW, Room 4035, ATTN: Hada Flowers, Washington, DC 20405.

Instructions: Please submit comments only and cite FAC 2005–30, FAR case 2008–003, in all correspondence related to this case. All comments received will be posted without change to *http://www.regulations.gov*, including any personal and/or business confidential information provided.

FOR FURTHER INFORMATION CONTACT: Mr. Ernest Woodson, Procurement Analyst, at (202) 501–3775 for clarification of content. Please cite FAC 2005–30, FAR case 2008–003. For information pertaining to status or publication schedules, contact the FAR Secretariat at (202) 501–4755.

SUPPLEMENTARY INFORMATION:

A. Background

The National Defense Authorization Act for Fiscal Year 2008, Section 844 ''Public Disclosure of Justification and Approval Documents for Noncompetitive Contracts ''amends 10 U.S.C. 2304 and 41 U.S.C. 253 regarding procurements made under subsection (c) (*i.e.*, other than competitive procedures) to require public availability of the justification and approval documents after contract award except for information exempt from public disclosure under 5 U.S.C. 552. The provisions of Section 844 require the head of an executive agency to make certain justification and approval documents relating to the use of noncompetitive procedures in contracting available on the website of an agency and through a governmentwide website selected by the Administrator for Federal Procurement Policy within 14 days of contract award. In the case of noncompetitive contracts awarded on the basis of unusual and compelling urgency, the documents must be posted within 30 days of contract award. The Competition in Contracting Act (Public Law 98–369) already requires that such justification and approval documents be made available for public inspection, subject to the exemptions from public disclosures provided in the Freedom of Information Act (5 U.S.C. 552).

This is not a significant regulatory action and, therefore, was not subject to review under Section 6(b) of Executive Order 12866, Regulatory Planning and Review, dated September 30, 1993. This rule is not a major rule under 5 U.S.C. 804.

B. Regulatory Flexibility Act

The interim rule is not expected to have a significant economic impact on a substantial number of small entities within the meaning of the Regulatory Flexibility Act, 5 U.S.C. 601, *et seq.*, because this rule does not revise or change existing regulations pertaining to small business concerns seeking Government contracts. Therefore, an Initial Regulatory Flexibility Analysis has not been performed. The Councils will consider comments from small entities concerning the affected FAR Parts 5, 6, and 24 in accordance with 5 U.S.C. 610. Interested parties must submit such comments separately and should cite 5 U.S.C 601, *et seq.* (FAC 2005–30, FAR case 2008–003), in all correspondence.

C. Paperwork Reduction Act

The Paperwork Reduction Act does not apply because the changes to the FAR do not impose information collection requirements that require the approval of the Office of Management and Budget under 44 U.S.C. 3501, *et seq.*

D. Determination to Issue an Interim Rule

A determination has been made under the authority of the Secretary of Defense (DoD), the Administrator of General Services (GSA), and the Administrator of the National Aeronautics and Space Administration (NASA) that urgent and compelling reasons exist to promulgate this interim rule without prior opportunity for public comment. This action is necessary because the provision of the National Defense Authorization Act for Fiscal Year 2008, Section 844 was enacted on January 28, 2008. The Councils believe that the interim rule in the FAR will provide contracting officers the relevant regulatory guidance needed when addressing requirements outlined in this notice. The rule will also benefit industry by increasing transparency and accountability in federal contracting. This interim rule is applicable to all contracts awarded from a 6.303–1 justification and approval document on or after the effective date of this rule. However, pursuant to Public Law 98–577 and FAR 1.501, the Councils will consider public comments received in response to this interim rule in the formation of the final rule.

List of Subjects in 48 CFR Parts 5, 6, and 24

Government procurement.

Dated: December 24, 2008

Edward Loeb,

Acting Director, Office of Acquisition Policy.

■ Therefore, DoD, GSA, and NASA amend 48 CFR parts 5, 6, and 24 as set forth below:

1. The authority citation for 48 CFR parts 5, 6, and 24 continues to read as follows:

Authority: 40 U.S.C. 121(c); 10 U.S.C. chapter 137; and 42 U.S.C. 2473(c).

PART 5—PUBLICIZING CONTRACT ACTIONS

■ 2. Amend section 5.301 by adding paragraph (d) to read as follows:

5.301 General.

* * * * *

(d) Justifications for other than full and open competition must be posted in accordance with 6.305.

■ 3. Add section 5.406 to read as follows:

5.406 Public disclosure of justification and approval documents for noncompetitive contracts.

Justifications for other than full and open competition must be posted in accordance with 6.305.

PART 6—COMPETITION REQUIREMENTS

■ 4. Revise section 6.305 to read as follows:

6.305 Availability of the justification.

(a) Except for paragraph (b) of this section, the agency shall make publicly available within 14 days after contract award the justification required by 6.303–1 as required by 10 U.S.C. 2304(f)(4) and 41 U.S.C. 253(f)(4)—

(1) At the GPE *www.fedbizopps.gov*; and

(2) On the website of the agency, which may provide access to the justifications by linking to the GPE.

(b) In the case of a contract award permitted under 6.302–2, the

justification shall be posted within 30 days after contract award.

(c) Contracting officers shall carefully screen all justifications for contractor proprietary data and remove all such data, and such references and citations as are necessary to protect the proprietary data, before making the justifications available for public inspection. Contracting officers shall also be guided by the exemptions to disclosure of information contained in the Freedom of Information Act (5 U.S.C. 552) and the prohibitions against disclosure in 24.202 in determining whether other data should be removed.

PART 24—PROTECTION OF PRIVACY AND FREEDOM OF INFORMATION

■ 5. Amend section 24.203 by adding after the second sentence and at the end of paragraph (b) new sentences to read as follows:

24.203 Policy.

* * * * *

(b) * * * Other exemptions include agency personnel practices, and law enforcement. * * * A Freedom of Information Act guide and other resources are available at the Department of Justice website under FOIA reference materials: *http://www.usdoj.gov/oip*.

[FR Doc. E9–555 Filed 1–14–09; 8:45 am]

BILLING CODE 6820–EP–S

DEPARTMENT OF DEFENSE

GENERAL SERVICES ADMINISTRATION

NATIONAL AERONAUTICS AND SPACE ADMINISTRATION

48 CFR Parts 1, 7, 18, 28, 32, 33, 43, 50, and 52

[FAC 2005–30; FAR Case 2006–023; Item V; Docket 2007–0001; Sequence 8]

RIN 9000–AK75

Federal Acquisition Regulation; FAR Case 2006–023, SAFETY Act: Implementation of DHS Regulations

AGENCIES: Department of Defense (DoD), General Services Administration (GSA), and National Aeronautics and Space Administration (NASA).

ACTION: Final rule.

SUMMARY: The Civilian Agency Acquisition Council and the Defense Acquisition Regulations Council (Councils) have agreed to convert the interim rule that published in the **Federal Register** at 72 FR 63027, November 7, 2007 to a final rule. The final rule amends the Federal Acquisition Regulation (FAR) to implement the Department of Homeland Security (DHS) regulations on the SAFETY Act.

DATES: Effective Date: February 17, 2009.

FOR FURTHER INFORMATION CONTACT: Mr. Edward N. Chambers, Procurement Analyst, at (202) 501–3221 for clarification of content. For information pertaining to status or publication schedules, contact the FAR Secretariat at (202) 501–4755. Please cite FAC 2005–30, FAR case 2006–023.

SUPPLEMENTARY INFORMATION:

A. Background

DoD, GSA, and NASA published an interim rule in the **Federal Register** at 72 FR 63027, November 7, 2007. Seven respondents submitted comments on the interim rule. All respondents generally supported the concepts of the FAR interim rule, but provided suggestions to improve clarity and better achieve the implementation of the SAFETY Act.

1. Definitions.

a. Pre-qualification designation notice (50.201 and associated clauses). In the definition ''pre-qualification designation notice'' one respondent suggested that the word ''successful'' prior to ''offeror'' be deleted because the interim rule allows all offerors to submit streamlined SAFETY Act applications, not just the successful offeror.

Response: The Councils have accepted this suggestion and the definition of ''pre-qualification designation notice'' has been modified throughout the final rule.

b. ''Block designation and ''block certification.'' One respondent was concerned that there is no definition of the terms ''block designation'' and block certification.''

Response: These definitions were embedded within the definition of ''SAFETY Act designation'' and ''SAFETY Act certification.'' These terms are now separately defined, to make it easier to locate the definitions.

2. General (50.203(a)).

The respondent suggested that because SAFETY Act protections extend to purchasers and users of technologies that the phrase in 50.203(a)(2) be amended to reflect this.

Response: Paragraph (a)(2) of the interim rule reads as follows:

''(2) Provide risk management and litigation management protections for sellers of QATTs and others in the supply and distribution chain.''

Risk management and litigation management are addressed in section 864 and 863 of the SAFETY Act respectively, and in 6 CFR 25.5 and 25.7 of the DHS regulations. The required amount of liability insurance purchased by the seller must provide protection for contractors, subcontractors, suppliers, vendors, and customers of the Seller, as well as contractors, subcontractors, suppliers, and vendors of the customer, to the extent of their potential liability for involvement in the manufacture, qualification, sale, use, or operation of the QATT. See Section 864 of the SAFETY Act. Accordingly, the phrase, ''and others in the supply and distribution chain,'' accurately reflects this required coverage. Therefore, no change has been made to the rule as a result of this comment.

3. Policy (50.204).

a. Benefits to the Government. The respondent thought that because the SAFETY Act also benefits the Government with respect to its potential liability, the requiring activities should not only encourage contractors to submit SAFETY Act applications, but also support these applications.

Response: The subject of any benefit the Government may ultimately enjoy with respect to a decreased liability is one that cannot be addressed in the context of this FAR case. The implications are too far reaching and would require a thorough analysis of many of the Government's waivers of sovereign immunity. However, to the extent that one of the criteria for the Department of Homeland Security (DHS) to determine whether to issue a designation is a determination made by a Federal, State, or local official that the technology is appropriate for preventing, detecting, identifying, or deterring acts of terrorism or limiting the harm such acts might cause, the FAR case has been amended to specifically reflect this possibility in 50.204(a) by changing the paragraph to read:

50.204 Policy.

(a) Agencies should—

(1) Determine whether the technology to be procured is appropriate for SAFETY Act protections and, if appropriate, formally relay this determination to DHS for purposes of supporting contractor application(s) for SAFETY Act protections in relation to criteria (b)(viii) of 6 CFR 25.4, *Designation of Qualified Anti-Terrorism Technologies*;

b. Authorities and responsibilities. One respondent wanted to clarify that determination of whether the SAFETY Act is applicable is within the exclusive purview and discretion of DHS. The respondent therefore recommended that the policy at 50.204(a)(1) should be revised to replace ''should'' with ''shall consult with DHS to...''

Response: It is not necessary in every circumstance to consult with DHS to determine whether the SAFETY Act is applicable. The procedures make it clear that in questionable cases the agency shall consult with DHS (50.205–1(a)).

c. Soliciting contingent offer. Another respondent thought that the language of 50.204(b) concerning not soliciting offers contingent upon SAFETY Act designation or certification before contract award was incongruous with normal acquisition procedures to solicit offers before award.

Response: ''Before contract award'' refers to ''SAFETY Act designation or certification'' not to ''shall not solicit offers.'' This can be clarified by adding a connecting word as follows:

''Agencies shall not solicit offers contingent upon SAFETY Act award designation or certification occurring before contract award, unless...''

d. Responsibility to take action. One respondent requested that the policy should address another responsibility, the responsibility to take action once the determinations are made.

Response: The additional language requested by the respondent is not appropriate in the Policy section. These actions are addressed under FAR 50.205 procedures.

4. SAFETY Act considerations (50.205–1).

a. SAFETY Act Applicability (50.205–1(a)).

i. Several respondents questioned the use of the phrase ''requiring activity'' and some thought it reasonable to include a definition for ''requiring activities.''

Response: The use of this phrase is consistent with other uses in the FAR and defining the term is outside the scope of this case.

ii. One respondent wondered if the statement that ''Requiring activities shall review requirements to identify potential technologies'' means that all requirements must be so reviewed. This respondent considered that it would be helpful if the FAR provided some guidance as to the types of requirements that must be so reviewed, and points to the summary of items at the beginning of FAC 2005–021, which provided examples of the goods and services to which FAR Subpart 50.2 applies.

Response: The Councils do not agree that it is advisable to provide such a list in the regulations. Any such list would never be complete, and could imply that technologies not on the list would not be covered by the SAFETY Act. There are some limited examples in the definition of Qualified Anti-Terrorism Technology (QATT), particularly of services and analyses that may be considered technology. In addition, examples of QATT are to be found on the SAFETY Act website identified at FAR 50.203(c) (e.g., see SAFETY Act 101 Briefing and Active Procurement List).

iii. One respondent recommended that the requiring activity's determination of the existence of a block designation or certification through discussions with DHS, must be mandatory (*i.e.*, change ''should'' to ''shall''). In the same sentence, the respondent recommended changing ''address through preliminary discussions'' to ''ascertain through discussions''. The respondent considered that this change will ensure that if a block designation or certification exists, it will be used in the procurement process.

Response: The Councils do not concur with the change from ''should'' to ''shall'' because the FAR does not direct requiring activities.

However, the Councils do concur with the change from ''address through preliminary discussions'' to ''ascertain through discussions,'' as being more precise. The existence of block designation or certification must be ascertained at this time, not at some time in the future. Therefore, these discussions are not preliminary.

iv. One respondent recommended that the discussion not be limited to ''block designations'' or ''block certifications.'' The respondent stated that DHS regulations provide coverage for ''designated technology,'' ''certified technology,'' and for Developmental Testing and Evaluation Designation for any technology that is being developed. Each of these additional technology designations should be ''on the table'' when a Federal agency is considering whether a technology is appropriate for SAFETY Act coverage.

Response: The block designations and block certifications are checked first because they are broader in scope, covering a class of technologies. There may be a block designation or block certification already in effect that can cover the planned acquisition.

Although ''designated technology'' and ''certified technology'' are specific to a particular technology, these designations are still ''on the table.'' FAR 50.205–1(a)(2) directs the agencies to proceed to 50.205–2, pre-qualification designation notice, if a block designation or block certification does not exist.

With regard to the ''developmental testing and evaluation designation,'' the DHS regulations established this category to cover an anti-terrorism technology that is being developed, but that requires additional developmental testing and evaluation (6 CFR 25.4(f)). However, the determination to use this type of designation is one that DHS may apply to a technology at its sole discretion. The pre-qualification designation notice process does not expressly include permitting a developmental testing and evaluation designation, but rather is limited to stating presumptively or affirmatively that a technology is a QATT. Therefore, while a developmental testing and evaluation designation may result from any application, the FAR language accurately reflects the different streamlined application process and streamlined review times made available to various vendors.

v. One respondent also suggested that the language in 50.205–1(a)(1), ''the requiring activity shall inform the contracting officer to notify offerors'', should be rewritten as ''the requiring activity shall request that the contracting officer notify offerors.''

Response: The Councils have accepted this suggestion as being simpler and clearer.

b. Early consideration of the SAFETY Act.

i. One respondent recommended a cross reference to 7.105(b)(19) be placed in 50.205(b).

Response: The Councils concur.

ii. The same respondent also requested that the regulations should provide guidance on the lead time required for SAFETY Act coverage determinations.

Response: The regulation states at 50.205–1(b) that processing times for issuing determinations on all types of SAFETY Act applications vary depending on many factors, including the influx of applications to DHS and the technical complexity of individual applications. This statement continues to be true, and more specific guidance is not possible.

c. Reciprocal waiver of claims (d). One respondent supported the statement in the rule that the Government is not a customer from which a contractor must request a reciprocal waiver.

Response: None required.

5. Prequalification Designation Notice (PQDN) (50.205–2).

a. PQDN after contract award. One respondent thought that the Pre-Qualification Designation Notices (PQDNs) were not limited to any particular time in the acquisition cycle and therefore, thought that PQDNs should also be available after contract award.

Response: In reviewing the DHS regulations on the issuance of PQDNs,

there is nothing to indicate that the procedure relates to anything other than the future procurement of a technology. See 6 CFR 25.6(g)(2). Further, the time periods of seeking a PQDN and a contractor then applying under the streamlined rules versus simply having the contractor apply for SAFETY Act protections would not justify such a procedure. It would be far simpler for contractors to apply for SAFETY Act protections themselves. The period for an expedited review is 60 days. The review period for a PQDN is also 60 days. When added together, this is equal to the 120 days for an entire SAFETY Act application. Of course, DHS may issue Block Designations and/or Certifications and, therefore, if contractors or requiring activities are interested in having DHS consider whether to issue a Block Designation or Certification, then they should write the Under Secretary of Science and Technology of DHS for this purpose.

b. Specification changes after PQDN. One respondent thought that the FAR case needed to be clarified with respect to specifications or statements of work changing after a PQDN had been issued.

Response: To the extent, that there may be confusion based on the wording in the interim rule, 50.205–2(a) has been amended to read:

(a) Requiring activity responsibilities. (1) If the requiring activity determines that the technology to be acquired may qualify for SAFETY Act protection, the requiring activity is responsible for requesting a pre-qualification designation notice from DHS. Such a request for a pre-qualification designation notice should be made once the requiring activity has determined that the technology specifications or statement of work are established and are unlikely to undergo substantive modification. DHS will then ...

c. Mandatory. With regard to the same paragraph (50.205–1(a)(1)), the respondent requested that the language should be mandatory, changing ''the requiring activity is responsible for requesting'' to ''the requiring activity shall request.''

Response: The FAR provides direction to the contracting officer and the contracting chain of command in an agency. The requiring activities do not look to the FAR for direction.

d. Streamlined methodology for technology already being sold to Government. Several respondents felt that there should be a streamlined methodology to apply and obtain SAFETY Act protections if contractors are already selling existing technologies to the Government.

Response: The DHS rules for applying for SAFETY Act protection do not provide for a *streamlined* methodology to apply and obtain SAFETY Act protection outside of the acquisition process. The FAR cannot provide for any additional methodology without DHS changing its rules on the manners in which to seek SAFETY Act protections. It should be emphasized though that contractors may, like any sellers of technologies, submit an application for SAFETY Act protections at any time. While the timelines for a traditional application are longer, the timelines are not expected to exceed an additional two months.

6. Contingent offers (50.205–3 and Alt I to 52.250–3 and 52.250–4).

a. Market research (50.205–3(a)(3)). One respondent thought the language in 50.205–3(a)(3) was unclear because this subparagraph did not specifically state who would perform the ''market research.'' The respondent thought the requirement for market research should be deleted because it would be difficult for contracting officers to obtain reliable information and because market research will be subjective and can result in widely divergent and inequitable implementation of the contingent and presumptive SAFETY Act clauses. Prior to submission of an offer, a company may not be in a position to make a categorical decision as to whether to supply technology without SAFETY Act coverage.

Response: FAR Part 10 clearly requires that the market research be performed by the contracting officer. Therefore, no change is required to this subparagraph.

It is Government policy to allow contingent offers only if market research shows that there will be insufficient competition without SAFETY Act protections or the subject technology would be sold to the Government only with SAFETY Act protections. With regard to subjectivity and widely divergent implementation, it is believed that the direction in FAR Part 10 provides enough guidance so as to protect against such a situation. However, it is recognized, as with any process, different employees will pursue a matter differently. This cannot be avoided.

b. Block certification. One respondent would prefer that the regulations not limit contracting officers from authorizing offers contingent on obtaining a SAFETY Act certification unless a block certification applies to the solicitation. (Also at 50.205–4(b).)

This respondent also recommended that the wording should be ''applies to the technology'' rather than ''applies to the solicitation.''

Response: DHS would not grant SAFETY Act certification unless a block certification existed, or unless the offeror already has applied for a SAFETY Act designation. Otherwise, DHS would first grant a designation, and subsequently grant a certification after the technology is proven, or simultaneously grant a designation and a certification, if requested by the applicant. In any event, a SAFETY Act designation will be part of any SAFETY Act protections conferred to a contractor. In virtually every circumstance, the Government will consider that to be sufficient protection to proceed to award.

The Councils have changed the wording at 50.205–3(b) and 50.205–4(b) to read ''applies to the class of technology to be acquired under the solicitation.''

c. No conditions. Several respondents suggested, with respect to accepting contingent offers, that no conditions or very limited conditions should be placed on a contracting officer's ability to accept contingent offers.

Response: Without analyzing the long-standing precedent of the Government not accepting contingent offers of any kind, the conditions placed on the acceptance of an offer contingent upon an offeror obtaining SAFETY Act designation or certification are very reasonable. The dual nature of the SAFETY Act application processes and the source selection processes makes it inherently risky for the Government to accept contingent offers. However, in light of the importance of using the SAFETY Act effectively, it was deemed worthwhile to accept the risk of permitting contingent offers, but only if certain conditions applied. Accordingly, this case had to mitigate the Government's risk in allowing contingent offers by including such conditions.

d. Right of the Government to award. Several respondents were concerned that paragraphs (f)(2) and (f)(3) of Alternate I to 52.250–3 and 50.250–4 are in conflict with each other, or at best, unclear.

Response: The Councils have rewritten paragraphs (f)(2) and (f)(3) to clarify that the right of the Government to award prior to resolution of the offeror's application for SAFETY Act designation would be an award on another offer, not the contingent offer.

7. Provision prescriptions (50.206).

a. 52.250–2, SAFETY Act Coverage Not Applicable.

i. One respondent recommended clarifying the coverage in FAR 50.206(a)(2) by adding before the period in the sentence the following phrase: ''and no block designation or block

certification applies to the technology to be acquired. See 50.205–1(a).''

Response: It would not be possible to get to this point if there were a block designation or block certification. The first consideration to be checked under the procedures at FAR 50.205–1(a) is whether or not there is a block designation or block certification. It is only if one does not exist that the agency would enter into discussions with DHS as to whether this technology might be a good candidate for a PQDN.

ii. The respondent also considered this clause prescription to be unclear, questioning whether 52.250–2 would be included if the agency based its determination of non-applicability of the SAFETY Act on its own, without DHS consultation, and wanting the FAR to make this clear. The respondent also reiterates that inclusion of a list of examples of items to which the SAFETY Act may be applicable would be helpful in determining whether to include the provision in the solicitation.

Response: The Councils consider that the FAR has made it very clear that this clause would only be used after consultation with DHS—either as specified in FAR 50.206(a)(1) or (a)(2). As stated in section 4.a, there are various sources of examples of products that may be suitable for SAFETY Act protection. However, whenever there is any possibility of applicability, DHS must be consulted.

b. 52.250–3, SAFETY Act Block Designation/ Certification. One respondent stated that it would be helpful to provide information on how to ascertain whether or not DHS has issued a block designation or certification.

Response: When DHS grants a block designation or block certification, it will be listed on the SAFETY Act website (see 50.203(c)). Even though there are currently no block designations or certifications, DHS has been requested to provide a place on the website now, so that it can be verified that there are currently no block designations or block certifications. The website is currently operational.

c. 52.250–3 and -4, Alternate II. One respondent recommended revision of 50.206(b)(3) and (c)(3) so that contracting officers can only increase the 15 day time period for submission of SAFETY Act applications, not decrease it. For some companies, it may not be feasible to submit an application in less than 15 days.

Response: The Councils concur and have revised the text accordingly.

8. ''SAFETY Act Coverage not applicable'' (52.250–2).

Two respondents thought that this provision should be eliminated. One respondent thought that the provision at 52.250–2 could lead to unintended consequences by not specifically limiting the provision to the products or services being acquired under the solicitation. The respondent felt that the wording of the provision might lead potential SAFETY Act applicants to believe that their technologies would never be appropriate for SAFETY Act protection. The respondent believed that this provision conflicts with the SAFETY Act, which confers exclusive authority on DHS to determine whether SAFETY Act application should be approved or denied. Another respondent stated that an offeror should still be precluded from seeking SAFETY Act coverage. If the provision is not removed, the respondent suggested narrowing of the applicability of the statements of inapplicability.

Response: Offerors should be informed if DHS has advised the agency that the SAFETY Act is not applicable or has denied approval of a pre-qualification designation notice. However, to the extent that the wording of the provision might cause some confusion, the Councils have reworded the provision as follows:

''The Government has determined that for purposes of this solicitation the product(s) or service(s) being acquired by this action are neither presumptively nor actually entitled to a pre-determination that the products or services are qualified anti-terrorism technologies as that term is defined by the Support Anti-terrorism by Fostering Effective Technologies Act of 2002 (SAFETY Act), 6 U.S.C. 441–444. This determination does not prevent sellers of technologies from applying for SAFETY Act protections in other contexts. Proposals in which either acceptance or pricing is made contingent upon SAFETY Act designation as a qualified anti-terrorism technology or SAFETY Act certification as an approved product for homeland security of the proposed product or service will not be considered for award. See Federal Acquisition Regulation subpart 50.2.''

9. SAFETY Act Prequalification Designation Notice (52.250–4). One respondent suggested that the language in 52.250–4(d) be amended to more accurately reflect the difference between a determination granting a SAFETY Act application and solicitation specifications.

Response: The language in 52.250–4(d) has been amended to more accurately reflect these differences. This amended language is set forth as follows:

(d) All determinations by DHS are based on factors set forth in the SAFETY Act, and its implementing regulations. A determination by DHS to issue a SAFETY Act designation, or not to issue a SAFETY Act designation for a particular technology as a QATT is not a determination that the technology meets, or fails to meet, the requirements of any solicitation issued by any Federal, state, local, or tribal governments. Determinations by DHS with respect to whether to issue a SAFETY Act designation for technologies submitted for DHS review are based on the factors identified in 6 CFR Section 25.4(b).

10. Alternate II to 52.250–3 and 52.250–4.

a. Insurance requirements and ''good faith''. One respondent suggested that the contractor should have the flexibility to negotiate the insurance requirements based on DHS's grant of a designation or certification.

One respondent wanted the insurance requirement in the FAR removed for a different reason, as well as the requirement that the offeror pursues its application in ''good faith.'' The respondent is concerned that DHS has the exclusive statutory and regulatory authority for implementing the SAFETY Act, including establishment and enforcement of requirements for securing designation or certification, and provides consequences if the company does not agree to the insurance requirements. Furthermore, only DHS can address the question of whether a seller is pursuing an application in ''good faith.''

Response: The respondent's comment cannot be addressed through regulations in the FAR. The insurance required by DHS is based in statute and the implementing DHS regulations. Any flexibility with regard to DHS's required amounts of insurance is a part of DHS's analysis when reviewing a particular SAFETY Act application and is not a subject of negotiation during a contract award.

Although the Councils concur that DHS is the agency that imposes the insurance requirements and can determine if an application is being pursued in good faith, nevertheless, it would be irresponsible to award a contract to an offeror with a presumption that designation will be received, if these conditions are not met.

b. Limited scope of SAFETY Act applications. Paragraph (f)(2) of Alternate II to 52.250–3 and 52.250–4 requires the offeror to file a SAFETY Act designation (or SAFETY Act certification) application, limited to the scope of the applicable block designation (or certification) or pre-qualification designation notice, in order to be eligible for award. The respondent was concerned that this limitation could have harsh results, precluding award where an offeror's technology may provide a more robust solution than definitively required. The

respondent considered that the potential exclusion of technologies outweighs the need to expedite the procurement process.

Response: Alternate II puts the Government in the unusually risky position of awarding a contract presuming that SAFETY Act coverage will be granted after award, and agreeing to negotiate an equitable adjustment if that does not occur. The Government only agrees to this alternate when certain conditions are met, including the fact that DHS has already issued a block designation or a block certification, or a pre-qualification designation notice for the solicited technology. Considering the risk involved in these circumstances, the Government cannot afford the additional risk that would be generated if the offeror then proposes a technology that is outside or beyond the scope of the technologies that have been already block designated or certified by DHS or reviewed and either affirmatively or presumptively endorsed by DHS as technologies that meet the criteria of the SAFETY Act. Without these assurances in advance, the Government cannot afford the risk of presuming that SAFETY Act designation or certification will be granted after contract award.

c. Before or after award. One respondent questioned why the clause at FAR 52.250–4, Alternate II, paragraph (f)(1) addresses submission of proposals presuming SAFETY Act coverage ''before or after'' award, but the heading at 50.205–4 states ''presuming SAFETY Act designation or certification after contract award.''

Response: At the time proposals are submitted, it is not yet known if SAFETY Act coverage will be received before or after award. If SAFETY Act coverage is received before award, there is no issue. However, if award must be made and SAFETY Act coverage has not yet been granted, then the special conditions must apply because award must be made based on the presumption that SAFETY Act coverage will be granted after award.

11. SAFETY Act—Equitable Adjustment (52.250–5).

a. Several respondents suggested that as part of the equitable adjustment clause at 52.250–5 the contractor should be allowed to stop work unilaterally.

Response: This suggestion is contrary to long standing Government procurement law and procedures and therefore, will not be considered further as part of this case. The contractor is not forced to submit an offer.

b. One respondent had a concern that under Alternate II, award can be made and delivery required, prior to receipt of SAFETY Act coverage. The respondent suggested modification of 52.250–5 to allow delayed delivery, without penalty, until SAFETY Act coverage is granted.

Response: This suggestion is inconsistent with the reasons for using this Alternate. The reason for proceeding to award under this alternate is based on a presumption of receiving SAFETY Act coverage after award. Therefore, the risk would have to be weighed against the urgency to award a contract. If delay would be acceptable, then there is no need to accept the risk of awarding a contract based on a contingency. In this case, it would be better to use Alternate I instead of Alternate II, and not make the award until the issue of SAFETY Act coverage is resolved.

c. One respondent wanted clarification of the meaning of ''a dispute in accordance with the ''Disputes'' clause of this contract.''

Response: The Councils consider that ''in accordance with the 'Disputes' clause of this contract'' in paragraph (d)(3) of the clause is sufficiently clear.

12. Comments on Subpart 50.1.

a. One respondent made the statement that the changes in FAR 50.102–3 to the procedures for an Agency to exercise the authority under paragraph 1A of E.O. 10789 would reduce the number of indemnifications granted.

Response: This may well be true. However, these procedures implemented as part of this rule reflect the transfer and delegation of certain functions to, and other responsibilities vested in, the Secretary of DHS, which stem directly from Executive Order 13286 and therefore, cannot be changed by this case.

b. The respondent also commented on other sections in Subpart 50.1.

Response: The interim rule republished existing language because of the massive renumbering of the sections. Renumbering is not a substantive change. The intention of this rulemaking was to take comments solely relating to the Safety Act. Therefore, comments on sections containing existing language where only the numbering was changed are outside the scope of this case.

13. *SAFETY Act Block Designation/ Certification (52.250–3).* Two respondents suggested that the SAFETY Act Certification is not a certification provided by the contractor and thus the provisions of the case should be placed in Section L of contracts and not Section K.

Response: This comment is accepted and the appropriate changes will be made in the clause matrix. A SAFETY Act Certification is a certification issued by DHS, not by the offerors.

This is not a significant regulatory action and, therefore, was not subject to review under Section 6(b) of Executive Order 12866, Regulatory Planning and Review, dated September 30, 1993. This rule is not a major rule under 5 U.S.C. 804.

B. Regulatory Flexibility Act

The Department of Defense, the General Services Administration, and the National Aeronautics and Space Administration certify that this final rule will not have a significant economic impact on a substantial number of small entities within the meaning of the Regulatory Flexibility Act, 5 U.S.C. 601, *et seq.*, because this rule imposes no burdens on businesses. Instead, it allows businesses to more easily take advantage of a Department of Homeland Security regulation published June 8, 2006, at 6 CFR part 25. The Department of Homeland Security certified in their rule that there would be no significant impact on a substantial number of small entities. The Councils did not receive any comments on the Regulatory Flexibility Act or a perceived burden on small business.

C. Paperwork Reduction Act

The Paperwork Reduction Act does not apply. These changes to the FAR do not impose additional information collection requirements to the paperwork burden previously approved under OMB Control Numbers 1640–0001 through 1640–0006, under applications made to OMB by the Department of Homeland Security.

List of Subjects in 48 CFR Parts 1, 7, 18, 28, 32, 33, 43, 50, and 52

Government procurement.

Dated: December 24, 2008.

Edward Loeb,

Acting Director, Office of Acquisition Policy.

■ Interim Rule Adopted as Final With Changes

■ Accordingly, the interim rule amending 48 CFR parts 1, 7, 18, 28, 32, 33, 43, 50, and 52 which was published in the **Federal Register** at 72 FR 63027 on November 7, 2007, is adopted as a final rule with the following changes:

■ 1. The authority citation for 48 CFR parts 1, 7, 18, 28, 32, 33, 43, 50, and 52 continues to read as follows:

Authority: 40 U.S.C. 121(c); 10 U.S.C. chapter 137; and 42 U.S.C. 2473(c).

PART 50—EXTRAORDINARY CONTRACTUAL ACTIONS AND THE SAFETY ACT

■ 2. Amend section 50.201 by—
■ a. Adding, in alphabetical order, the definitions ''Block certification'' and ''Block designation'';
■ b. Amending the definition ''Pre-qualification designation notice'' by removing the word ''successful''; and
■ c. Revising the definitions ''SAFETY Act certification'' and ''SAFETY Act designation''.
■ The added and revised text reads as follows:

50.201 Definitions.

* * * * *

Block certification means SAFETY Act certification of a technology class that the Department of Homeland Security (DHS) has determined to be an approved class of approved products for homeland security.

Block designation means SAFETY Act designation of a technology class that the DHS has determined to be a Qualified Anti-Terrorism Technology (QATT).

* * * * *

SAFETY Act certification means a determination by DHS pursuant to 6 U.S.C. 442(d), as further delineated in 6 CFR 25.8 and 25.9, that a QATT for which a SAFETY Act designation has been issued is an approved product for homeland security, *i.e.*, it will perform as intended, conforms to the seller's specifications, and is safe for use as intended.

SAFETY Act designation means a determination by DHS pursuant to 6 U.S.C. 441(b) and 6 U.S.C. 443(a), as further delineated in 6 CFR 25.4, that a particular Anti-Terrorism Technology constitutes a QATT under the SAFETY Act.

■ 3. Amend section 50.203 by adding a sentence to the end of paragraph (c) to read as follows:

50.203 General.

* * * * *

(c) * * * Included on this website are block designations and block certifications granted by DHS.

■ 4. Amend section 50.204 by revising paragraph (a)(1); and amending paragraph (b) by removing the word ''certification'' and adding ''certification occurring'' in its place. The revised text reads as follows:

50.204 Policy.

(a) * * *

(1) Determine whether the technology to be procured is appropriate for SAFETY Act protections and, if appropriate, formally relay this determination to DHS for purposes of supporting contractor application(s) for SAFETY Act protections in relation to criteria (b)(viii) of 6 CFR 25.4, Designation of Qualified Anti-Terrorism Technologies;

* * * * *

■ 5. Amend section 50.205–1 by revising the introductory text of paragraph (a) and paragraph (a)(1); and amending paragraph (b) by removing the word ''possible'' and adding ''possible (see FAR 7.105(b)(19)(v))'' in its place. The revised text reads as follows:

50.205–1 SAFETY Act Considerations.

(a) *SAFETY Act applicability.* Requiring activities should review requirements to identify potential technologies that prevent, detect, identify, or deter acts of terrorism or limit the harm such acts might cause, and may be appropriate for SAFETY Act protections. In questionable cases, the agency shall consult with DHS. For acquisitions involving such technologies, the requiring activity should ascertain through discussions with DHS whether a block designation or block certification exists for the technology being acquired.

(1) If one does exist, the requiring activity should request that the contracting officer notify offerors.

* * * * *

■ 6. Amend section 50.205–2 by adding a new sentence after the first sentence in paragraph (a)(1) to read as follows:

50.205–2 Pre-qualification designation notice.

(a)(1) * * * Such a request for a pre-qualification designation notice should be made once the requiring activity has determined that the technology specifications or statement of work are established and are unlikely to undergo substantive modification. * * *

* * * * *

■ 7. Amend section 50.205–3 by revising paragraph (b) to read as follows:

50.205–3 Authorization of offers contingent upon SAFETY Act designation or certification before contract award.

* * * * *

(b) Contracting officers shall not authorize offers contingent upon obtaining a SAFETY Act certification (as opposed to a SAFETY Act designation), unless a block certification applies to the class of technology to be acquired under the solicitation.

■ 8. Amend section 50.205–4 by revising paragraph (b) to read as follows:

50.205–4 Authorization of awards made presuming SAFETY Act designation or certification after contract award.

* * * * *

(b) Contracting officers shall not authorize offers presuming that SAFETY Act certification will be obtained (as opposed to a SAFETY Act designation), unless a block certification applies to the class of technology to be acquired under the solicitation.

50.206 [Amended]

■ 9. Amend section 50.206 in paragraphs (b)(3) and (c)(3) by removing the word ''alter'' and adding the word ''increase'' in its place.

PART 52—SOLICITATION PROVISIONS AND CONTRACT CLAUSES

■ 10. Amend section 52.250–2 by revising the date of the provision and the provision to read as follows:

52.250–2 SAFETY Act Coverage Not Applicable.

* * * * *

SAFETY ACT COVERAGE NOT APPLICABLE (FEB 2009)

The Government has determined that for purposes of this solicitation the product(s) or service(s) being acquired by this action are neither presumptively nor actually entitled to a pre-determination that the products or services are qualified anti-terrorism technologies as that term is defined by the Support Anti-terrorism by Fostering Effective Technologies Act of 2002 (SAFETY Act), 6 U.S.C. 441–444. This determination does not prevent sellers of technologies from applying for SAFETY Act protections in other contexts. Proposals in which either acceptance or pricing is made contingent upon SAFETY Act designation as a qualified anti-terrorism technology or SAFETY Act certification as an approved product for homeland security of the proposed product or service will not be considered for award. See Federal Acquisition Regulation subpart 50.2.

(End of provision)

■ 11. Amend section 52.250–3 by—
■ a. Revising the date of the provision;
■ b. In paragraph (a) by—
■ 1. Adding, in alphabetical order, the definitions ''Block certification'' and ''Block designation''; and
■ 2. Revising the definitions ''SAFETY Act certification'' and ''SAFETY Act designation'';
■ c. Revising paragraph (d);
■ d. Amending paragraph (e) by removing the word ''room'' and adding the word ''Room'' in its place;
■ e. In Alternate I by revising the date of the alternate and paragraphs (f)(2) and (f)(3); and
■ f. In Alternate II by revising the date of the alternate; and amending paragraph (f)(2)(iii) by removing the

word ''any'' and adding ''the offeror's'' in its place.

■ The added and revised text reads as follows:

52.250–3 SAFETY Act Block Designation/ Certification.

* * * * *

SAFETY ACT BLOCK DESIGNATION/ CERTIFICATION (FEB 2009)

(a) * * *

* * * * *

Block certification means SAFETY Act certification of a technology class that the Department of Homeland Security (DHS) has determined to be an approved class of approved products for homeland security.

Block designation means SAFETY Act designation of a technology class that the DHS has determined to be a Qualified Anti-Terrorism Technology (QATT).

* * * * *

SAFETY Act certification means a determination by DHS pursuant to 6 U.S.C. 442(d), as further delineated in 6 CFR 25.9, that a QATT for which a SAFETY Act designation has been issued is an approved product for homeland security, *i.e.*, it will perform as intended, conforms to the seller's specifications, and is safe for use as intended.

SAFETY Act designation means a determination by DHS pursuant to 6 U.S.C. 441(b) and 6 U.S.C. 443(a), as further delineated in 6 CFR 25.4, that a particular Anti-Terrorism Technology constitutes a QATT under the SAFETY Act.

* * * * *

(d) All determinations by DHS are based on factors set forth in the SAFETY Act and its implementing regulations. A determination by DHS to issue a SAFETY Act designation, or not to issue a SAFETY Act designation for a particular technology as a QATT is not a determination that the technology meets, or fails to meet, the requirements of any solicitation issued by any Federal, State, local or tribal governments. Determinations by DHS with respect to whether to issue a SAFETY Act designation for technologies submitted for DHS review are based on the factors identified in 6 CFR 25.4(b).

* * * * *

Alternate I (FEB 2009). * * *

(f)(1) * * *

(2) If an offer is submitted contingent upon receipt of SAFETY Act designation (or SAFETY Act certification, if a block certification exists) prior to contract award, then the Government may not award a contract based on such offer unless the offeror demonstrates prior to award that DHS has issued a SAFETY Act designation (or SAFETY Act certification, if a block certification exists) for the offeror's technology.

(3) The Government reserves the right to award the contract based on a noncontingent offer, prior to DHS resolution of the offeror's application for SAFETY Act designation (or SAFETY Act certification, if a block certification exists).

Alternate II (FEB 2009). * * *

* * * * *

■ 12. Amend section 52.250–4 by—

■ a. Revising the date of the provision;

■ b. In paragraph (a) by—

■ 1. Adding, in alphabetical order, the definitions ''Block certification'' and ''Block designation'';

■ 2. Removing from the definition ''Pre-qualification designation notice'' the word ''successful''; and

■ 3. Revising the definitions ''SAFETY Act certification'' and ''SAFETY Act designation'';

■ c. Revising paragraph (d);

■ d. In Alternate I by revising the date of the alternate and paragraphs (f)(2) and (f)(3); and

■ e. In Alternate II by revising the date of the alternate; and amending paragraph (f)(2)(iii) by removing the word ''any'' and adding ''the offeror's'' in its place.

■ The added and revised text reads as follows:

52.250–4 SAFETY Act Pre-qualification Designation Notice.

* * * * *

SAFETY ACT PRE-QUALIFICATION DESIGNATION NOTICE (FEB 2009)

(a) * * *

* * * * *

Block certification means SAFETY Act certification of a technology class that the Department of Homeland Security (DHS) has determined to be an approved class of approved products for homeland security.

Block designation means SAFETY Act designation of a technology class that the DHS has determined to be a Qualified Anti-Terrorism Technology (QATT).

* * * * *

SAFETY Act certification means a determination by DHS pursuant to 6 U.S.C. 442(d), as further delineated in 6 CFR 25.9, that a QATT for which a SAFETY Act designation has been issued is an approved product for homeland security, *i.e.*, it will perform as intended, conforms to the seller's specifications, and is safe for use as intended.

SAFETY Act designation means a determination by DHS pursuant to 6 U.S.C. 441(b) and 6 U.S.C. 443(a), as further delineated in 6 CFR 25.4, that a particular Anti-Terrorism Technology constitutes a QATT under the SAFETY Act.

* * * * *

(d) All determinations by DHS are based on factors set forth in the SAFETY Act and its implementing regulations. A determination by DHS to issue a SAFETY Act designation, or not to issue a SAFETY Act designation for a particular Technology as a QATT is not a determination that the Technology meets, or fails to meet, the requirements of any solicitation issued by any Federal, State, local or tribal governments. Determinations by DHS with respect to whether to issue a SAFETY Act designation for Technologies submitted for DHS review are based on the factors identified in 6 CFR 25.4(b).

* * * * *

Alternate I (FEB 2009). * * *

(f)(1) * * *

(2) If an offer is submitted contingent upon receipt of SAFETY Act designation prior to contract award, then the Government may not award a contract based on such offer unless the offeror demonstrates prior to award that DHS has issued a SAFETY Act designation for the offeror's technology.

(3) The Government reserves the right to award the contract based on a noncontingent offer, prior to DHS resolution of the offeror's application for SAFETY Act designation.

Alternate II (FEB 2009). * * *

* * * * *

■ 13. Amend section 52.250–5 by—

■ a. Revising the date of the clause;

■ b. In paragraph (a) by—

■ 1. Adding the definitions ''Block certification'' and ''Block designation'' in alphabetical order; and

■ 2. Revising the definitions ''SAFETY Act certification'' and ''SAFETY Act designation''.

■ The added and revised text reads as follows:

52.250–5 SAFETY Act—Equitable Adjustment.

* * * * *

SAFETY ACT—EQUITABLE ADJUSTMENT (FEB 2009)

(a) * * *

* * * * *

Block certification means SAFETY Act certification of a technology class that the Department of Homeland Security (DHS) has determined to be an approved class of approved products for homeland security.

Block designation means SAFETY Act designation of a technology class that the DHS has determined to be a Qualified Anti-Terrorism Technology (QATT).

* * * * *

SAFETY Act certification means a determination by DHS pursuant to 6 U.S.C. 442(d), as further delineated in 6 CFR 25.9, that a QATT for which a SAFETY Act designation has been issued is an approved product for homeland security, *i.e.*, it will perform as intended, conforms to the seller's specifications, and is safe for use as intended.

SAFETY Act designation means a determination by DHS pursuant to 6 U.S.C. 441(b) and 6 U.S.C. 443(a), as further delineated in 6 CFR 25.4, that a particular Anti-Terrorism Technology constitutes a QATT under the SAFETY Act.

* * * * *

[FR Doc. E9–577 Filed 1–14–09; 8:45 am]

BILLING CODE 6820–EP–S

DEPARTMENT OF DEFENSE

GENERAL SERVICES ADMINISTRATION

NATIONAL AERONAUTICS AND SPACE ADMINISTRATION

48 CFR Parts 11, 23, 39, and 52

[FAC 2005–30; FAR Case 2006–030; Item VI; Docket 2007–0001, Sequence 9]

RIN 9000–AK85

Federal Acquisition Regulation; FAR Case 2006–030, Electronic Products Environmental Assessment Tool (EPEAT)

AGENCIES: Department of Defense (DoD), General Services Administration (GSA), and National Aeronautics and Space Administration (NASA).

ACTION: Final rule.

SUMMARY: The Civilian Agency Acquisition Council and the Defense Acquisition Regulations Council (Councils) have agreed to adopt as final, without change, the interim rule published in the **Federal Register** at 72 FR 73215 on December 26, 2007. The interim rule amended the Federal Acquisition Regulation (FAR) to provide regulations for purchasing environmentally preferable products and services when acquiring personal computer products such as desktops, notebooks (also known as laptops), and monitors with use of Electronic Products Environmental Assessment Tool (EPEAT) pursuant to the Energy Policy Act of 2005 and Executive Order 13423, ''Strengthening Federal Environmental, Energy, and Transportation Management.''

DATES: *Effective Date*: February 17, 2009.

FOR FURTHER INFORMATION CONTACT: Mr. William Clark, Procurement Analyst, at (202) 219–1813 for clarification of content. For information pertaining to status or publication schedules, contact the FAR Secretariat at (202) 501–4755. Please cite FAC 2005–30, FAR case 2006–030.

SUPPLEMENTARY INFORMATION:

A. Background

The EPEAT is a system to help purchasers in the public and private sectors evaluate, compare, and select desktop computers, notebooks and monitors based on their environmental attributes. The EPEAT also provides a clear and consistent set of performance criteria for the design of products, and provides an opportunity for manufacturers to secure market recognition for efforts to reduce the environmental impact of their products.

This case was opened to amend the FAR to require the use of the EPEAT Product Registry and the IEEE (Institute of Electrical and Electronics Engineers) 1680 Standard for the Environmental Assessment of Personal Computer Products in all solicitations and contracts for personal computer desktops, laptops, and monitors. On January 24, 2007, President Bush issued Executive Order 13423, Strengthening Federal Environmental, Energy, and Transportation Management. Section 2(h) states that the head of each Agency shall ''ensure that the agency (i) when acquiring an electronic product to meet its requirements, meets at least 95 percent of those requirements with an Electronic Product Environmental Assessment Tool (EPEAT)-registered electronic product, unless there is no EPEAT standard for such product…''.

The Councils published an interim rule on December 26, 2007 (72 FR 73215). Two respondents submitted comments.

1. One respondent fully supports the interim rule. As a taxpayer, he considers that EPEAT is a critical step in facilitating sound purchasing policy.

Response: None required.

2. The same respondent encourages DoD to expand the use of EPEAT in all COTS purchases of related equipment, even computers that are ruggedized for operational use.

Response: DoD implementation of this rule is outside the scope of this case.

3. Another respondent considers the goals of the regulation laudable, but objects to the process by which the Development Team initiated the development of EPEAT standards. The respondent objects that the Development Team was not rightly identified as a Federal Advisory Committee at its formation, and that neither the requirements of the Federal Advisory Committee Act (FACA), nor even its spirit, were met in the development of EPEAT. The respondent considers that their industry was deprived of the proper and necessary notice of the development of the EPEAT and any associated policies regarding implementation.

Response: The development of the EPEAT is not an issue in this rulemaking. Although the Councils were not involved in the development of the standards, they have reviewed these issues with the Environmental Protection Agency (EPA) and the Office of Management and Budget (OMB). The EPA has demonstrated to the satisfaction of the Councils that the Development Team was not subject to FACA, and appropriate procedures were followed for development of voluntary consensus standards. The Councils have forwarded the respondent's concerns to EPA. If the respondent has further questions with regard to the EPEAT, key EPEAT points of contact are provided on the EPEAT Website at *http://www.epeat.net/faq.aspx#21*.

4. The same respondent expresses particular concern because this rule takes a non-governmental program that was to be used voluntarily by purchasers and now mandates its use by all Federal Government agencies. The respondent also questions the urgency for issuance of an interim rule rather than a proposed rule.

Response: With regard to mandating the use of the EPEAT for Government purchases, the rule implements the Executive Order 13423, Strengthening Federal Environmental, Energy, and Transportation Management. Section 2(h) states that the head of each Agency shall ''ensure that the agency (i) when acquiring an electronic product to meet its requirements, meets at least 95 percent of those requirements with an Electronic Product Environmental Assessment Tool (EPEAT)-registered electronic product, unless there is no EPEAT standard for such product''.

The rule was issued as an interim rule because the Executive Order mandating use of the EPEAT standards was already in effect. Rules that implement a statute or Executive Order are generally issued as interim rules.

This is not a significant regulatory action and, therefore, was not subject to review under Section 6(b) of Executive Order 12866, Regulatory Planning and Review, dated September 30, 1993. This rule is not a major rule under 5 U.S.C. 804.

B. Regulatory Flexibility Act

The rule may have a significant economic impact on a substantial number of small entities within the meaning of the Regulatory Flexibility Act, 5 U.S.C. 601, *et seq.*, because it mandates standards in orders for personal computer products that will be offered for sale to the Government. A Final Regulatory Flexibility Analysis (FRFA) has been prepared and is summarized as follows:

This final rule was initiated to implement Executive Order 13423, Strengthening Federal Environmental, Energy, and Transportation Management, Section 2(h) and the IEEE (Institute of Electrical and Electronics Engineers) 1680 Standard for the Environmental Assessment of Personal Computers, for Federal use in meeting green purchasing requirements when acquiring personal computer products.

There were no significant issues raised by the public comments in response to the initial regulatory flexibility analysis.

As of June 2008, seven of the twenty-seven vendors who have registered products on the EPEAT Product Registry reported that they are small businesses. Data are not available on how many small businesses are reselling personal computer products to the Government, but according to the EPA's Office of Small Disadvantaged Business Utilization, at the time of publication of the interim rule, there were approximately 613 Service Disabled Veteran Owned Small Businesses (SDVOSBs) selling IT hardware to the Federal Government. These small businesses were not manufacturers of IT hardware, but resold IT hardware manufactured by other companies to the Federal Government. Many of the products these resellers sold could meet the IEEE 1680 Standard, and the manufacturers of these products had the option of getting these products EPEAT registered to verify that they do meet this standard.

Because manufacturers are the parties responsible for determining if their products meet the IEEE 1680 Standard or not, there will be little to no impact on small businesses selling IT products to the Federal Government, who are selling EPEAT-registered products. In addition, the EPEAT Product Registry has been designed to encourage small business manufacturer participation. There is a sliding scale for the annual EPEAT registration fee vendors pay to have their products EPEAT registered based on the annual revenue of the vendor.

The rule does not duplicate, overlap, or conflict with any other Federal rules.

The FAR Secretariat has submitted a copy of the FRFA to the Chief Counsel for Advocacy of the Small Business Administration. A copy of the FRFA may be obtained from the FAR Secretariat. The Councils will consider comments from small entities concerning the affected FAR Parts 11, 23, 39, and 52 in accordance with 5 U.S.C. 610. Interested parties must submit such comments separately and should cite 5 U.S.C. 601, *et seq.* (FAR case 2006–030), in correspondence.

C. Paperwork Reduction Act

The Paperwork Reduction Act does not apply because the changes to the FAR do not impose information collection requirements that require the approval of the Office of Management and Budget under 44 U.S.C. 3501, *et seq.*

List of Subjects in 48 CFR Parts 11, 23, 39, and 52

Government procurement.

Dated: December 24, 2008

Edward Loeb,

Acting Director, Office of Acquisition Policy.

Interim Rule Adopted as Final Without Change

Accordingly, the interim rule amending 48 CFR parts 11, 23, 39, and 52 which was published in the **Federal Register** at 72 FR 73215 on December 26, 2007, is adopted as a final rule without change.

[FR Doc. E9–549 Filed 1–14–09; 8:45 am]

BILLING CODE 6820–EP–S

DEPARTMENT OF DEFENSE

GENERAL SERVICES ADMINISTRATION

NATIONAL AERONAUTICS AND SPACE ADMINISTRATION

48 CFR Parts 12, 22, and 52

[FAC 2005–30; FAR Case 2005–012; Item VII; Docket 2006–0020; Sequence 25]

RIN 9000–AK31

Federal Acquisition Regulation; FAR Case 2005–012, Combating Trafficking in Persons

AGENCIES: Department of Defense (DoD), General Services Administration (GSA), and National Aeronautics and Space Administration (NASA).

ACTION: Final rule.

SUMMARY: The Civilian Agency Acquisition Council and the Defense Acquisition Regulations Council (Councils) have agreed to adopt as final, with changes, the second interim rule published in the **Federal Register** at 72 FR 46335, August 17, 2007, amending the Federal Acquisition Regulation (FAR) to implement 22 U.S.C. 7104(g). This statute requires that contracts include a provision that authorizes the department or agency to terminate the contract, if the contractor or any subcontractor engages in trafficking in persons.

DATES: *Effective Date*: February 17, 2009.

FOR FURTHER INFORMATION CONTACT: Mr. Ernest Woodson, Procurement Analyst, at (202) 501–3775 for clarification of content. For information pertaining to status or publication schedules, contact the Regulatory Secretariat at (202) 501–4755. Please cite FAC 2005–30, FAR case 2005–012.

SUPPLEMENTARY INFORMATION:

A. Background

The Trafficking Victims Protection Reauthorization Act (TVPRA) of 2003, as amended by TVPRA of 2005, addresses the victimization of countless men, women, and children in the United States and abroad. In order to implement the law, DoD, GSA, and NASA published a second interim rule in the **Federal Register** at 72 FR 46335, August 17, 2007 with request for comments by October 16, 2007. Five respondents submitted comments on the second interim rule. Those comments, summarized as follows, were considered by the Councils in the formation of this final rule:

1. *Applicability to Commercial Items.* Four comments were received from three different respondents regarding the applicability of the rule to commercial items.

(a) One respondent is concerned that although the FAR Matrix indicates that FAR clause 52.222–50 is not applicable to commercial items, FAR 52.212–5 includes 52.222–50 as a clause that the contracting officer may mark as being applicable to commercial items.

Response: The Councils concur with the respondent's concern and agrees to indicate in the FAR clause matrix that clause 52.222–50 is required.

(b) One respondent believes that by making the rule applicable to commercial items, the Councils misinterpreted the separate Federal crimes created under Chapter 77 of Title 18, United States Code, as providing the necessary criminal or civil penalties for the contract violations to which the Federal Acquisition Streamlining Act was meant to apply. The respondent requests the Councils to reconsider the applicability to commercial items.

Response: The Councils note that application of the rule to all contracts for supplies and services, including those for commercial items, is consistent with the broad scope of the statutory directive and is in compliance with the Federal Acquisition Streamlining Act's (FASA) provision concerning commercial contracts. Specifically, the statutory language at 22 U.S.C. 7104(g) contained no exceptions or limitations with regard to its application to Federal contracts. While FASA governs and limits the applicability of laws to commercial items, it also provides that if a provision of law contains criminal or civil penalties, or if the Federal Acquisition Regulatory Council determines that it is not in the best interest of the Federal Government to exempt commercial item contracts, then the provision of law will apply to contracts for commercial items.

(c) Another respondent asked the Councils to give further consideration to not applying the rule to commercial items (subcontracts), indicating that the application will give rise to unintended consequences and create an effect inconsistent with Federal acquisition goals.

Response: The Councils believe that the TVPRA of 2003 and 2005 reflects Congress's intent to allow for the

termination of all U.S. contracts when specified prohibited acts take place. Although the intent of the Federal Acquisition Streamlining Act and the Clinger-Cohen Act is to limit the applicability of laws to commercial items and commercially available off-the-shelf (COTS) items, these laws also provide that if a provision of law contains criminal or civil penalties, then commercial items are not to be exempted. The Councils believe the rule corresponds to these laws and the mandate of the TVPRA.

(d) The respondent further commented that if the rule's applicability to commercial items is to be retained, that it be listed in FAR 52.244–6, Subcontracts for Commercial Items.

Response: The Councils agree with the respondent's comment to add FAR 52.222–50 at 52.244–6(c)(1), requiring flow-down to subcontracts for commercial items.

2. *Exemption*. One respondent recommended creating a general exemption from the rule where the Federal Government affirmatively contracts for services to support front-line intervention activities domestically or internationally. The respondent states that many contractors that are involved in both the health and international development arena may directly or indirectly be involved in front-line intervention contracts and even advocacy programs to increase awareness of these and related activities.

Response: The Councils note the respondent's concern as it relates to ''front-line'' intervention contracts. However, the councils are not aware of any conflict that this rule may present in relation to those efforts. The terms used throughout the rule reflect the terms used in the statute. Actions taken to help trafficking victims do not violate the rule. Therefore, the Councils do not believe that an exemption is necessary and the final rule remains unchanged.

3. *Contractor Employees*. Three comments were received regarding employees.

(a) One respondent is concerned with the term ''minimal impact or involvement in contract performance'' in the definition of employee. The respondent believes that in the acquisition of commercial items (commercially available off the shelf supplies), a contractor may not know which employees had a minimal impact on contract performance. The respondent suggests that a commercial item supplier make a ''good faith determination'' regarding the minimal impact requirement.

Response: The Councils agree that the contractor should make a first good faith determination of the employee's involvement. The Councils do not agree that use of the term ''minimal impact or involvement in contract performance'' is ambiguous. The term narrows the scope of the definition of employee and leaves the determination of impact/involvement to the contractor. The Councils do not agree that a contractor cannot determine if an employee had a ''minimal impact or involvement in contract performance'' in the acquisition of commercial items. The contractor is in the best position to know and determine what role an employee plays in the performance of a contract, major or minor. The contractor is responsible for work production as well as work assignments. In the case of a violation of the clause, the contractor can determine the employee's duties under the contract and associate those duties with performance under the contract.

(b) One respondent is concerned that as written, the rule fails to achieve the contractor-accountability provisions of the TVPRA of 2005 and requests that the Councils reinsert the requirements for contractors to obtain written notification of understanding of polices and procedures to combat human trafficking.

Response: As written, the rule requires the contractor to notify its employees and take appropriate action against employees that violate policies and procedures to combat human trafficking. The Councils appreciate the respondent's concern for ensuring that contractor employees who engage in trafficking are appropriately held accountable. However, the Councils do not believe that requiring the contractor to obtain written notification of employees' understanding of policies and procedures to combat human trafficking will ensure that no violations occur. In fact, such a requirement may impose an undue and unnecessary burden on the contractor and taxpayer. The requirement for the contractor to notify its employees of the prohibited trafficking and other behaviors, as well as the actions that may be taken for violations, satisfies the requirements of 22 U.S.C. 7104(g), to hold those engaged in trafficking accountable.

(c) Two respondents are concerned that the rule is directed to contractor employees not the contractor and requests that the rule be revised to limit it to the contractor and its employees during the performance of the contact, not to employee behavior outside work.

Response: As written, the rule reflects the statutory language prohibiting severe forms of trafficking in persons or the procurement of a commercial sex act during the period of performance of the contract. The Councils believe that limiting the rule in the manner suggested by the respondent would inadequately implement the statute since employee violations are more likely to occur after working hours. Furthermore, contractor employees are often perceived as representing the Government, and their actions reflect upon the Government's integrity and ethics. Therefore, to ensure that U.S. Government contractors do not contribute to trafficking in persons, the rule requires the contractor to notify its employees (as defined in the clause) of the U.S. zero tolerance policy, and take action against those employees who violate the U.S. policy.

4. *Scope of Contractor's Obligation*. One respondent suggested that the text of the clause at FAR 52.222–50 be revised to further elaborate on the scope of the contractor's obligations regarding what actions it may take against employees and subcontractors who violate the policy.

Response: The Councils do not believe that further elaboration is necessary. The clause is clear that contractors must notify their employees regarding the policy and the actions that may be taken for violations. The clause lists examples of actions that contractors may take, but does not limit the actions to only those listed. Furthermore, the clause already provides contractors with flexibility as to what actions they may choose to impose against either employees or subcontractors in subparagraph (c)(2) by stating that the contractor shall take ''appropriate'' action.

5. *Reporting Allegations and Employment*. Three comments were received regarding the procedures for reporting allegations and employment issues.

(a) One respondent objected to the obligation in the FAR clause 52.222–50(d)(1), which requires contractors to notify the contracting officer immediately when they learn of allegations that the policy has been violated. The respondent proposed that contractors be obligated to notify only when they have ''adequate evidence'' of a violation.

Response: The Councils believes that it is important for the contracting officer to learn immediately of alleged violations of U.S. trafficking policy. Many such allegations become a subject of interest quickly, and it is important in those situations that the contracting officer be informed. The Councils further believes that the ''adequate evidence'' standard contained in FAR 22.1704(b) properly limits the

contracting officer's ability to exercise the available remedies with respect to allegations of conduct that violate U.S. policy.

(b) One respondent is concerned that the rule does not provide guidance on how employees found to have engaged in trafficking will be prevented from working on another Government contract. The respondent believes that some ''stop-gap'' measure is required until the Government deals with the investigations and prosecution issue.

Response: The Councils disagree that the rule should provide guidance on how employees found to have engaged in trafficking are to be prevented from working on another Government contract. Providing such guidance would be outside the scope of the rule. Each acquisition carries its own unique and special contract requirements and terms and conditions for which the contractor is responsible and liable. This responsibility and liability includes the contractor's hiring of responsible employees and subcontractors that meet the performance requirements, and terms and conditions specified in the acquisition. This responsibility may include the contractor's responsibility to conduct appropriate background investigations prior to hiring its employees and subcontractors.

(c) Another respondent is concerned that the rule provides the potential for wrongful discharge filings and collective bargaining issues.

Response: A contractor may need to update the employment contracts it forms (whether with unions or non-unionized employees) to reflect the anti-trafficking statute, which is intended to have an impact on the behavior of Government contractor employees.

6. *Prescriptive Language Applicability*. One respondent noted that the prescriptive language at FAR 22.1703 and 22.1704(a) provides that ''Government contracts shall prohibit contractors, contractor employees, subcontractors and subcontractor employees'' from taking the listed actions. However, the clause at FAR 52.222–50(b) is limited to ''contractor and contractor employees.'' The prescriptive language and clause language should be reconciled.

Response: It should be noted that provisions and clauses are directed to the offeror or contractor. The term ''contractor and contractor employees'' refers to the prime contractor only. When a prime contractor issues a subcontract, the clause would then be applicable to the subcontractor using the term ''contractor and contractor employees.'' However, the prescriptive language provides all conditions, requirements, and instructions for using the provision or clause and is applicable to both contractors and subcontractors. The Councils recommends that the final rule remain unchanged.

7. *Administrative Issues*. One respondent recommended several administrative changes, as follows:

(a) FAR 22.1703 uses the word ''and'' while FAR 52.222–50(b) uses the word ''or.'' This should be reconciled;

(b) Move the reference to FAR clause 52.222–50 from FAR 52.212–5(b)(24)(i) and (ii) to FAR 52.212–5(a) because the clause applies to all contracts;

(c) FAR 52.212–5(e)(1)(vii) needlessly cites a reason for listing the flow-down clause. By incorporating the clause in paragraph (e), by definition the clause flows down to subcontractors; and

(d) FAR 52.222–50(e) should be reworded to remove awkwardness.

Responses:

(a) FAR language at 22.1703(a)(2) has been changed to read ''or'' instead of ''and.'' All other conjunctions are used correctly throughout the rule.

(b) FAR clause 52.222–50 has been moved to 52.212–5(a).

(c) FAR language at 52.212–5(e)(1)(vii) has been revised to remove the reason for flow-down.

(d) FAR 52.222–50(e) has been revised to remove awkward wording of remedies.

8. *Clarification of Definitions*. Two respondents recommended further revisions regarding definitions. One respondent recommended adding a definition for ''forced labor'' as defined in the criminal statute at 18 U.S.C. § 1589, and another recommended more elaboration to the definitions of ''sex act'' and ''employee'' and offered suggested language as well.

Response: The Councils concur that a definition of ''forced labor'' should be added. The statute prohibits severe forms of trafficking in persons and, separately, forced labor. While forced labor is a severe form of trafficking in persons, as defined in 22 U.S.C. 7102, the Councils agree that defining the specific term ''forced labor'' would add more clarity. Therefore, a definition of ''forced labor'' has been added to 22.1702 and the clause at 52.222–50.

Because the FAR rule reflects the definition of ''commercial sex act'' in accordance with 22 U.S.C. 7102, the Councils believe that the statutory definition of commercial sex acts should remain as stated in the rule without further elaboration.

Lastly, a respondent requested clarifications in the definition of ''employee'' to more clearly outline what is meant by ''directly engaged'' and ''minimal impact or involvement''. The original rule issued on April 19, 2006 (71 FR 20301) used the phrase ''including all direct cost employees'' in the definition of ''employee'', similar to the language used in FAR 23.503 implementing the Drug-Free Workplace Act. The Councils subsequently removed this phrase in the second interim rule based on public comment that the phrase caused confusion since the term ''direct cost'' appeared to refer to cost-reimbursement contracts only. The phrase ''minimal impact or involvement'' is also used in the definition of ''employee'' under FAR 23.503 and is not further defined. The Councils are not aware that the lack of more definitive elaboration has caused any problems in the implementation of the drug-free workplace requirements. Also see the discussion under Paragraph 3.

9. *Facilitation of Investigations and Prosecutions*. One respondent suggested the creation of an anti-trafficking hotline that would link directly to the Department of Justice to allow contractor employees to report trafficking allegations.

Response: This comment goes beyond the statutory requirements of the Act, which requires only that contracts contain provisions allowing for termination if the contractor or subcontractor engages in conduct that violates U.S. policy on trafficking. However, the Councils recommend adding a link to the Department of State's Office to Monitor and Combat Trafficking in Persons' (DOS G/TIP) (*http://www.state.gov/g/tip*) at FAR 22.1703 for further information on human trafficking and links to other Government websites.

10. One respondent suggested making a distinction between trafficking abuses and the procurement of a commercial sex act. The respondent further states that trafficking in persons is a felony while procurement of a commercial sex act is not covered by Federal law and is treated in most states as a misdemeanor, unless it involves a child. The lack of distinction in the rule heightens confusion and becomes difficult to implement.

Response: The statute requires that the Government have the authority to terminate a contract in cases where the contractor or subcontractor engages in severe forms of trafficking in persons, or in cases involving the procurement of a commercial sex act. The rule seeks to implement both statutory directives and remains unchanged.

11. *Enforcement Issues Where Commercial Sex Acts are Legal*. One respondent was concerned that certain

types of sex acts are legal in several jurisdictions of the U.S. and in some foreign countries and urged that careful attention be given to how the remedies in this rule intersect with otherwise lawful conduct.

Response: The Councils recognize the challenges contractors face in monitoring employee actions during non-work hours. However, contractors and their employees need to understand that procuring commercial sex acts is an unacceptable behavior that carries penalties. The Councils do not believe that a change in the language to distinguish enforcement actions for ''unlawful commercial sex acts'' and ''lawful commercial sex acts'' is consistent with the statute and therefore the final rule remains unchanged.

12. *Investigation and Punishment of Violators.* One respondent submitted two comments regarding the investigation of trafficking violators.

(a) The respondent recommends revising the text to include specific procedures governing the investigation and punishment of contractors for violating the rule. The respondent also questions whether there is a requirement for the contractor to investigate if the company learns that an employee may have been involved in a commercial sex act.

Response: Violations of the rule should be handled in the same manner that the contractor handles other allegations of employee misconduct.

(b) The respondent also suggests creating a decision-tree for contracting officers attempting to apply the rule.

Response: In cases where trafficking is alleged, the FAR is clear on what actions the contracting officer may take. After making a determination in writing that adequate evidence exists to suspect any of the violations in paragraph (a) of FAR 22.1704, the contracting officer may pursue any of the remedies specified in paragraph (e) of FAR clause 52.222–50.

13. *Public Meeting.* One respondent requested that the Councils seek an active dialogue with the contractor community in developing the final rule.

Response: The Councils have solicited the public several times for comments to assist with the development of this rule. Public comments were solicited on April 16, 2006 and August 17, 2007.

This is a significant regulatory action and, therefore, was subject to review under Executive Order 12866, Regulatory Planning and Review, dated September 30, 1993. This rule is not a major rule under 5 U.S.C. 804.

B. Regulatory Flexibility Act

The Department of Defense, the General Services Administration, and the National Aeronautics and Space Administration certify that this final rule will not have a significant economic impact on a substantial number of small entities within the meaning of the Regulatory Flexibility Act, 5 U.S.C. 601, *et seq.*, because the impact will be minimal unless the contractor or its employees or subcontractors engage in forms of trafficking in persons, use forced labor, or procure commercial sex acts that are illegal within the U.S. Although not considered significant, additional impact may be associated with contract performance in counties/states and locations outside the U.S. where certain commercial sex acts are legal. However, the termination authorities at 22 U.S.C. 7104(g) apply to Government contracts performed in these areas.

C. Paperwork Reduction Act

The Paperwork Reduction Act (Pub. L. 104–13) applies because the final rule contains information collection requirements. Accordingly, the Regulatory Secretariat will forward a request for approval of a new information collection requirement to the Office of Management and Budget under 44 U.S.C. 3501, *et seq.* Public comments concerning this request will be invited through a subsequent **Federal Register** notice.

List of Subjects in 48 CFR Parts 12, 22, and 52

Government procurement.

Dated: December 24, 2008

Edward Loeb,

Acting Director, Office of Acquisition Policy.

■ Accordingly, the interim rules published in the **Federal Register** at 71 FR 20301, April 19, 2006, and at 72 FR 46335, August 17, 2007, are adopted as a final rule with the following changes:

■ 1. The authority citation for 48 CFR parts 22 and 52 continues to read as follows:

Authority: 40 U.S.C. 121(c); 10 U.S.C. chapter 137; and 42 U.S.C. 2473(c).

PART 22—APPLICATION OF LABOR LAWS TO GOVERNMENT ACQUISITIONS

■ 2. Amend section 22.1702 by adding, in alphabetical order, the definition ''Forced Labor'' to read as follows:

22.1702 Definitions.

* * * * *

Forced labor means knowingly providing or obtaining the labor or services of a person—

(1) By threats of serious harm to, or physical restraint against, that person or another person;

(2) By means of any scheme, plan, or pattern intended to cause the person to believe that, if the person did not perform such labor or services, that person or another person would suffer serious harm or physical restraint; or

(3) By means of the abuse or threatened abuse of law or the legal process.

* * * * *

■ 3. Amend section 22.1703 by revising the introductory paragraph; and by removing from the end of paragraph (a)(2) ''and'' and adding ''or'' in its place. The revised text reads as follows:

22.1703 Policy.

The United States Government has adopted a zero tolerance policy regarding trafficking in persons. Additional information about trafficking in persons may be found at the website for the Department of State's Office to Monitor and Combat Trafficking in Persons' at *http://www.state.gov/g/tip*. Government contracts shall—

* * * * *

■ 4. Amend section 22.1704 in paragraph (b) by adding a new sentence after the first sentence to read as follows:

22.1704 Violations and remedies.

* * * * *

(b) * * * The contracting officer may take into consideration whether the contractor had a Trafficking in Persons awareness program at the time of the violation as a mitigating factor when determining the appropriate remedies. * * *

PART 52—SOLICITATION PROVISIONS AND CONTRACT CLAUSES

■ 5. Amend section 52.212–5 by—

■ a. Revising the date of the clause;

■ b. Redesignating paragraphs (a)(1) and (a)(2) as (a)(2) and (a)(3), respectively; and adding a new paragraph (a)(1);

■ c. Removing paragraph (b)(25); and redesignating paragraphs (b)(26) through (b)(42) as (b)(25) through (b)(41), respectively; and

■ d. Revising paragraph (e)(1)(viii) to read as follows:

52.212–5 Contract Terms and Conditions Required to Implement Statutes or Executive Orders—Commercial Items.

* * * * *

CONTRACT TERMS AND CONDITIONS REQUIRED TO IMPLEMENT STATUTES OR EXECUTIVE ORDERS—COMMERCIAL ITEMS (FEB 2009)

(a) * * *

(1) 52.222–50, Combating Trafficking in Persons (FEB 2009) (22 U.S.C. 7104(g)).

____Alternate I (Aug 2007) of 52.222–50 (22 U.S.C. 7104(g)).

* * * * *

(e)(1) * * *

(viii) 52.222–50, Combating Trafficking in Persons (FEB 2009) (22 U.S.C. 7104(g)).

____Alternate I (Aug 2007) of 52.222–50 (22 U.S.C. 7104(g)).

* * * * *

■ 6. Amend section 52.213–4 by revising the date of the clause and paragraph (a)(1)(iv); and removing from paragraph (a)(2)(vi) ''(DEC 2008)'' and adding ''(FEB 2009)'' in its place to read as follows:

52.213–4 Terms and Conditions—Simplified Acquisitions (Other Than Commercial Items).

* * * * *

TERMS AND CONDITIONS—SIMPLIFIED ACQUISITIONS (OTHER THAN COMMERCIAL ITEMS (FEB 2009)

(a) * * *

(1) * * *

(iv) 52.222–50, Combating Trafficking in Persons (FEB 2009) (22 U.S.C. 7104(g)).

* * * * *

■ 7. Amend section 52.222–50 by—

■ a. Revising the date of the clause;

■ b. Adding, in alphabetical order, the definition ''Forced Labor'';

■ c. Removing from the introductory text of paragraph (e) ''render the Contractor subject to'' and adding ''result in'' in its place; and revising paragraphs (e)(1) and (e)(2); and

■ d. Adding paragraph (g) to read as follows:

52.222–50 Combating Trafficking in Persons.

* * * * *

COMBATING TRAFFICKING IN PERSONS (FEB 2009)

(a) * * *

* * * * *

Forced Labor means knowingly providing or obtaining the labor or services of a person—

(1) By threats of serious harm to, or physical restraint against, that person or another person;

(2) By means of any scheme, plan, or pattern intended to cause the person to believe that, if the person did not perform such labor or services, that person or another person would suffer serious harm or physical restraint; or

(3) By means of the abuse or threatened abuse of law or the legal process.

* * * * *

(e) * * *

(1) Requiring the Contractor to remove a Contractor employee or employees from the performance of the contract;

(2) Requiring the Contractor to terminate a subcontract;

* * * * *

(g) *Mitigating Factor*. The Contracting Officer may consider whether the Contractor had a Trafficking in Persons awareness program at the time of the violation as a mitigating factor when determining remedies. Additional information about Trafficking in Persons and examples of awareness programs can be found at the website for the Department of State's Office to Monitor and Combat Trafficking in Persons at *http://www.state.gov/g/tip*.

(End of clause)

■ 8. Amend section 52.244–6 by revising the date of the clause; by redesignating paragraph (c)(1)(vii) as paragraph (c)(1)(viii); and adding a new paragraph (c)(1)(vii) to read as follows:

52.244–6 Subcontracts for Commercial Items.

* * * * *

SUBCONTRACTS FOR COMMERCIAL ITEMS (FEB 2009)

* * * * *

(c)(1) * * *

(vii) 52.222–50, Combating Trafficking in Persons (FEB 2009) (22 U.S.C. 7104(g)).

* * * * *

[FR Doc. E9–548 Filed 1–14–09; 8:45 am]

BILLING CODE 6820–EP–S

DEPARTMENT OF DEFENSE

GENERAL SERVICES ADMINISTRATION

NATIONAL AERONAUTICS AND SPACE ADMINISTRATION

48 CFR Parts 22, 25, and 52

[FAC 2005–30; FAR Case 2007–016; Item VIII; Docket 2008–0001; Sequence 3]

RIN 9000–AK89

Federal Acquisition Regulation; FAR Case 2007–016, Trade Agreements—New Thresholds

AGENCIES: Department of Defense (DoD), General Services Administration (GSA), and National Aeronautics and Space Administration (NASA).

ACTION: Final rule.

SUMMARY: The Civilian Agency Acquisition Council and the Defense Acquisition Regulations Council (Councils) have agreed on a final rule amending the Federal Acquisition Regulation (FAR) to incorporate increased thresholds for application of the World Trade Organization Government Procurement Agreement and the Free Trade Agreements, as determined by the United States Trade Representative.

DATES: *Effective Date*: January 15, 2009.

FOR FURTHER INFORMATION CONTACT: Ms. Meredith Murphy, Procurement Analyst, at (202) 208–6925, for clarification of content. For information pertaining to status or publication schedules, contact the FAR Secretariat at (202) 501–4755. Please cite FAC 2005–30, FAR case 2007–016.

SUPPLEMENTARY INFORMATION:

A. Background

DoD, GSA, and NASA published an interim rule in the **Federal Register** at 73 FR 10962 on February 28, 2008, to implement the biannual changes specified by the United States Trade Representative (USTR) to the trade agreements thresholds. A correction was published in the **Federal Register** at 73 FR 16747, March 28, 2008.

No comments were received by the close of the public comment period on April 28, 2008. Therefore, the Councils agreed to convert the interim rule to a final rule without change.

This is not a significant regulatory action and, therefore, was not subject to review under Section 6(b) of Executive Order 12866, Regulatory Planning and Review, dated September 30, 1993. This rule is not a major rule under 5 U.S.C. 804.

B. Regulatory Flexibility Act

The Department of Defense, the General Services Administration, and the National Aeronautics and Space Administration certify that this final rule will not have a significant economic impact on a substantial number of small entities within the meaning of the Regulatory Flexibility Act, 5 U.S.C. 601, *et seq.*, because the dollar threshold changes are designed to keep pace with inflation and thus maintain the status quo.

C. Paperwork Reduction Act

The Paperwork Reduction Act (Pub. L. 104–13) applies because the final rule contains information collection requirements that affect the prescriptions for use of the certifications at FAR 52.225–4 (OMB Control No. 9000–0130) and FAR 52.225–6 (OMB Control No. 9000–0025) and the clauses at FAR 52.225–9 and 52.225–11 (OMB Control No. 9000–0141), which contain information collection requirements approved under the specified OMB control numbers by the Office of Management and Budget under 44 U.S.C. 3501, *et seq.* However, there is no impact on the estimated burden hours, because the threshold changes are in

line with inflation and maintain the status quo.

List of Subjects in 48 CFR Parts 22, 25, and 52

Government procurement.

Dated: December 24, 2008

Edward Loeb,

Acting Director, Office of Acquisition Policy.

Interim Rule Adopted as Final Without Change

Accordingly, the interim rule amending 48 CFR parts 22, 25, and 52, which was published at 73 FR 10962 on February 28, 2008, and amended at 73 FR 16747 on March 28, 2008, is adopted as a final rule without change.

[FR Doc. E9–547 Filed 1–14–09; 8:45 am]

BILLING CODE 6820–EP–S

DEPARTMENT OF DEFENSE

GENERAL SERVICES ADMINISTRATION

NATIONAL AERONAUTICS AND SPACE ADMINISTRATION

48 CFR Part 15

[FAC 2005–30; Item IX; Docket FAR–2009–0011; Sequence 1]

Federal Acquisition Regulation; Technical Amendment

AGENCIES: Department of Defense (DoD), General Services Administration (GSA), and National Aeronautics and Space Administration (NASA).

ACTION: Final rule.

SUMMARY: This document makes an amendment to the Federal Acquisition Regulation in order to make an editorial change.

DATES: Effective Date: January 15, 2009.

FOR FURTHER INFORMATION CONTACT The FAR Secretariat, Room 4041, GS Building, Washington, DC, 20405, (202) 501–4755, for information pertaining to status or publication schedules. Please cite FAC 2005–30, Technical Amendment.

List of Subjects in 48 CFR Part 15

Government procurement.

Dated: December 24, 2008.

Edward Loeb,

Acting Director, Office of Acquisition Policy.

■ Therefore, DoD, GSA, and NASA amend 48 CFR part 15 as set forth below:

PART 15—CONTRACTING BY NEGOTIATION

■ 1. The authority citation for 48 CFR part 15 continues to read as follows:

Authority: 40 U.S.C. 121(c); 10 U.S.C. chapter 137; and 42 U.S.C. 2473(c).

15.101–2 [Amended]

■ 2. Amend section 15.101–2 by removing from paragraph (b)(1) ''15.304(c)(3)(iv)'' andadding ''15.304(c)(3)(iii)'' in its place.

[FR Doc. E9–546 Filed 1–14–09; 8:45 am]

BILLING CODE 6820–EP–S

DEPARTMENT OF DEFENSE

GENERAL SERVICES ADMINISTRATION

NATIONAL AERONAUTICS AND SPACE ADMINISTRATION

48 CFR Chapter 1

[Docket FAR 2009–0013, Sequence 1]

Federal Acquisition Regulation; Federal Acquisition Circular 2005–30; Small Entity Compliance Guide

AGENCIES: Department of Defense (DoD), General Services Administration (GSA), and National Aeronautics and Space Administration (NASA).

ACTION: Small Entity Compliance Guide.

SUMMARY: This document is issued under the joint authority of the Secretary of Defense, the Administrator of General Services and the Administrator of the National Aeronautics and Space Administration. This *Small Entity Compliance Guide* has been prepared in accordance with Section 212 of the Small Business Regulatory Enforcement Fairness Act of 1996. It consists of a summary of rules appearing in Federal Acquisition Circular (FAC) 2005-30 which amend the FAR. An asterisk (*) next to a rule indicates that a regulatory flexibility analysis has been prepared. Interested parties may obtain further information regarding these rules by referring to FAC 2005-30, which precedes this document. These documents are also available via the Internet at *http://www.regulations.gov*.

FOR FURTHER INFORMATION CONTACT Hada Flowers, Regulatory Secretariat, (202) 208-7282. For clarification of content, contact the analyst whose name appears in the table below.

LIST OF RULES IN FAC 2005–30

Item	Subject	FAR case	Analyst
I	Federal Procurement Data System (FPDS)	2004–038	Woodson.
II	Commercially Available Off-the-Shelf (COTS) Items	2000–305	Jackson.
•III	Exemption of Certain Service Contracts from the Service Contract Act (SCA)	2001–004	Woodson.
IV	Public Disclosure of Justification and Approval Documents for Noncompetitive Contracts-Section 844 of the National Defense Authorization Act for Fiscal Year 2008 (Interim).	2008–003	Woodson.
V	SAFETY Act: Implementation of DHS Regulations	2006–023	Chambers.
•VI	Electronic Products Environmental Assessment Tool (EPEAT)	2006–030	Clark.
VII	Combating Trafficking in Persons	2005–012	Woodson.
VIII	Trade Agreements—New Thresholds	2007–016	Murphy.
IX	Technical Amendment		

SUPPLEMENTARY INFORMATION: Summaries for each FAR rule follow. For the actual revisions and/or amendments to these FAR cases, refer to the specific item number and subject set forth in the documents following these item summaries.

FAC 2005–30 amends the FAR as specified below:

Item I—Federal Procurement Data System (FPDS) (FAR Case 2004–038)

This final rule amends the Federal Acquisition Regulation (FAR) Subpart 4.6 to revise the process for reporting contract actions to the Federal Procurement Data System (FPDS). The rule establishes FPDS as the single authoritative source of all procurement data for a host of applications and reports, such as the Central Contractor Registration (CCR), the Electronic Subcontracting Reporting System (eSRS), the Small Business Goaling Report (SRGR), and Resource Conservation and Recovery Act (RCRA) data. The rule requires Contracting Officers to verify the accuracy of contract award data prior to reporting the data in FPDS. The rule does not require any reporting by the vendor community, as the FPDS reporting requirement is accomplished by Government contracting activities.

Item II—Commercially Available Off-the-Shelf (COTS) Items (FAR Case 2000–305)

This final rule amends the Federal Acquisition Regulation (FAR) to implement Section 4203 of the Clinger-Cohen Act of 1996 (41 U.S.C. 431) with respect to the inapplicability of certain laws to contracts and subcontracts for the acquisition of commercially available off-the-shelf (COTS) items. A new FAR section 12.103 outlines the treatment of COTS items. This rule will reduce the burden on contractors that provide commercially available off-the-shelf EPA-designated products that contain recovered materials and contractors that provide construction material or end products that are COTS items manufactured in the United States. Contracting officers will need to become acquainted with the new definition of ''commercially available off-the-shelf item'' and understand the revised definitions of ''domestic end product'' and ''domestic construction material.''

Item III—Exemption of Certain Service Contracts from the Service Contract Act (SCA) (FAR Case 2001–004)

This rule finalizes, with changes, the interim rule that was published in the **Federal Register** at 72 FR 63076 on November 7, 2007. This rule is required to implement the U.S. Department of Labor's final rule published in the **Federal Register** at 66 FR 5327 on January 18, 2001, amending 29 CFR Part 4. This rule revises the current Service Contract Act (SCA) exemption in the FAR and adds an SCA exemption for contracts for certain additional services that meet specific criteria. The rule also adds to the Annual Representations and Certifications FAR clause at 52.204–8, the conditions under which each listed provision applies, or for the more complex cases, a check-off for the contracting officer to indicate whether the provision is applicable to the solicitation. The rule encourages broader participation of Government procurement by companies doing business in the commercial sector, and reinforces the Government's commitment to reduce Government-unique terms and conditions, without compromising the purpose of the SCA to protect prevailing labor standards.

Item IV—Public Disclosure of Justification and Approval Documents for Noncompetitive Contracts-Section 844 of the National Defense Authorization Act for Fiscal Year 2008 (Interim) (FAR Case 2008–003)

This interim rule amends FAR 6.305 to require agencies to make available for public inspection within 14 days after contract award the justification required by 6.303–1, on the website of the agency and at the Governmentwide Point of Entry (*www.fedbizopps.gov*). In the case of a contract award permitted under FAR 6.302–2, the rule requires that the justification be posted within 30 days after contract award. The rule requires that contracting officers shall carefully screen all justifications for contractor proprietary data and remove all such data, and such references and citations as are necessary to protect the proprietary data, before making the justifications available for public inspection. This rule implements Section 844 of the National Defense Authorization Act for Fiscal Year 2008.

Item V—SAFETY Act: Implementation of DHS Regulations (FAR Case 2006–023)

This final rule converts the interim rule published in the **Federal Register** at 72 FR 63027, November 7, 2007 to a final rule with changes. This final rule implements the SAFETY Act in the FAR. The SAFETY Act provides incentives for the development and deployment of anti-terrorism technologies by creating a system of ''risk management'' and a system of ''litigation management.'' The purpose of the SAFETY Act is to ensure that the threat of liability does not deter potential manufacturers or sellers of antiterrorism technologies from developing, deploying, and commercializing technologies that could save lives. Examples of Qualified Anti-Terrorism Technologies (QATT) identified by DHS include—

- Vulnerability assessment and countermeasure and counter-terrorism planning tools;
- First responder interoperability solution;
- Marine traffic management system;
- Security services, guidelines, systems, and standards;
- Vehicle and cargo inspection system;
- X-ray inspection system;
- Trace explosives detection systems and associated support services;
- Maintenance and repair of screening equipment;
- Risk assessment platform;
- Explosive and weapon detection equipment and services;
- Biological detection and filtration systems;
- Passenger screening services;
- Baggage screening services;
- Chemical, biological, or radiological agent release detectors;
- Vehicle barriers;
- First responder equipment; and
- Architectural and engineering ''hardening'' products and services.

Item VI—Electronic Products Environmental Assessment Tool (EPEAT) (FAR Case 2006–030)

The Civilian Agency Acquisition Council and the Defense Acquisition Regulations Council (Councils) have adopted as final, without change, the interim rule that amended the Federal Acquisition Regulation (FAR) to require use of the Electronic Products Environmental Assessment Tool (EPEAT) when acquiring personal computer products such as desktops, notebooks (also known as laptops), and monitors pursuant to the Energy Policy Act of 2005 and Executive Order 13423, ''Strengthening Federal Environmental, Energy, and Transportation Management.'' The interim rule revised Subpart 23.7, and prescribed a clause at 52.223–16 (also included in 52.212–5 for acquisition of commercial items) in all solicitations and contracts for the acquisition of personal computer products, services that require furnishing of personal computer products for use by the Government, and services for contractor operation of Government owned facilities.

Item VII—Combating Trafficking in Persons (FAR Case 2005–012)

This final rule implements Section 3(b) of the Trafficking Victims Protection Reauthorization Act (TVPRA) of 2003 (Combating Trafficking In Persons). TVPRA addresses the victimization of countless men, women, and children in the United States and abroad. The United States Government

believes that its contractors can help combat trafficking in persons. The statute, codified at 22 U.S.C. 7104(g), requires that contracts contain a clause allowing the agency to terminate the contract if a contractor, contractor employees, subcontractor, or subcontractor employees engage in severe forms of trafficking in persons or procures a commercial sex act during the period of performance of the contract, or uses forced labor in the performance of the contract. The rule provides that the contracting officer may consider whether the contractor had a Trafficking in Persons awareness program at the time of a violation as a mitigating factor when determining remedies; and a website where the contractor may obtain additional information about Trafficking in Persons and examples of awareness programs.

Item VIII—Trade Agreements—New Thresholds (FAR Case 2007–016)

This final rule converts the interim rule published in the **Federal Register** at 73 FR 10962 on February 28, 2008, and amended at 73 FR 16747 on March 28, 2008, to a final rule without change.

The rule adjusts the thresholds for application of the World Trade Organization Government Procurement Agreement and the Free Trade Agreements as determined by the United States Trade Representative, according to a formula set forth in the agreements.

Item IX—Technical Amendment

An editorial change is made at FAR 15.101–2.

Dated: December 24, 2008.

Edward Loeb,

Acting Director, Office of Acquisition Policy.

[FR Doc. E9–538 Filed 1–14–09; 8:45 am]

BILLING CODE 6820–EP–S

Federal Register

Thursday,
January 15, 2009

Part IV

Housing and Urban Development Department

24 CFR Part 30
Civil Money Penalties: Certain Prohibited Conduct; Final Rule

DEPARTMENT OF HOUSING AND URBAN DEVELOPMENT

24 CFR Part 30

[Docket No. FR–5081–F–02]

RIN 2501–AD23

Civil Money Penalties: Certain Prohibited Conduct

AGENCY: Office of the Secretary, HUD.

ACTION: Final rule.

SUMMARY: This final rule revises HUD's regulations that govern the imposition of civil money penalties. Specifically, this rule revises the definitions of ''material or materially'' and adds a definition of ''ability to pay,'' which is one factor used in determining the appropriateness of the amount of any civil money penalty. Additionally, this rule requires respondents, in their responses to the prepenalty notice, to specifically address the factors used in determining the appropriateness and amount of civil money penalty. This rule also allows government counsel to file complaints on behalf of the Mortgagee Review Board and departmental officials. Finally, this rule makes other minor clarifying changes. This final rule follows publication of an October 17, 2008, proposed rule, but makes no changes at this final rule stage.

DATES: *Effective Date:* February 17, 2009.

FOR FURTHER INFORMATION CONTACT: Dane Narode, Associate General Counsel for Program Enforcement, Department of Housing and Urban Development, 1250 Maryland Avenue, SW., Suite 200, Washington, DC 20024–0500; telephone number 202–708–2350 (this is not a toll-free number), or e-mail address *Dane.M.Narode@hud.gov.* Hearing- or speech-impaired individuals may access the telephone number listed above by calling the toll-free Federal Information Relay Service at 800–877–8339.

SUPPLEMENTARY INFORMATION:

I. Background—The October 17, 2008, Proposed Rule

HUD's civil money penalties regulations are located in 24 CFR part 30. In general, 24 CFR part 30 outlines the procedures and requirements that concern violations, prepenalty notices, and complaints.

On October 17, 2008, at 73 FR 61754, HUD published a rule that proposed to define ''ability to pay'' and to revise the definition of ''material'' or ''materially'' in § 30.10. Additionally, the rule proposed to revise § 30.35 to delete failure to comply with ''the terms of a settlement agreement with HUD'' from the list of actions for which the Mortgagee Review Board may initiate a civil money penalty action against a mortgagee or lender. HUD also proposed clarifications regarding acts that may constitute unsatisfactory management, violations of a housing assistance payments contract, the required contents of a prepenalty notice, and the procedures for responding to prepenalty notices. The rule also proposed to clarify that the respondent's ability to pay is presumed unless specifically raised by the respondent as an affirmative defense or mitigating factor, the complaint under § 30.85 will be issued by government counsel on behalf of the government officials authorized to issue such complaints, and a respondent may request a hearing within 15 days of receipt of the complaint.

II. This Final Rule

The October 17, 2008, proposed rule provided a 60-day public comment period, which closed on December 16, 2008. HUD received no public comments in response to the proposed rule. At this final rule stage, HUD adopts the proposed rule without change.

III. Findings and Certifications

Regulatory Flexibility Act

The Regulatory Flexibility Act (RFA) (5 U.S.C. 601 *et seq.*) generally requires an agency to conduct a regulatory flexibility analysis of any rule subject to notice and comment rulemaking requirements, unless the agency certifies that the rule will not have a significant economic impact on a substantial number of small entities. There are no anti-competitive discriminatory aspects of the rule with regard to small entities, and there are no unusual procedures that would need to be complied with by small entities. All entities, small or large, will be subject to the same potential penalties as established by statute and implemented by this rule. The statute does not provide an exemption for small entities. Therefore, this final rule will not have a significant economic impact on a substantial number of small entities. Accordingly, the undersigned certifies that this rule will not have a significant economic impact on a substantial number of small entities.

Environmental Impact

In accordance with 24 CFR 50.19(c)(6) of HUD's regulations, this rule involves the Department's regulations implementing civil money penalty statutes. In accordance with 24 CFR 50.19(c)(1) of HUD's regulations, this rule does not direct, provide for assistance or loan and mortgage insurance for, or otherwise govern or regulate, real property acquisition, disposition, leasing, rehabilitation, alteration, demolition, or new construction, or establish, revise, or provide for standards for construction or construction materials, manufactured housing, or occupancy. Therefore, this final rule is categorically excluded from the requirements of the National Environmental Policy Act (42 U.S.C. 4321 *et seq.*).

Executive Order 13132, Federalism

Executive Order 13132 (entitled ''Federalism'') prohibits, to the extent practicable and permitted by law, an agency from promulgating a regulation that has federalism implications and either imposes substantial direct compliance costs on state and local governments and is not required by statute, or preempts state law, unless the relevant requirements of Section 6 of the Executive Order are met. This rule affects only persons who fail to comply with the Department's requirements, it does not have federalism implications, and it does not impose substantial direct compliance costs on state and local governments or preempt state law within the meaning of the Executive Order.

Unfunded Mandates Reform Act

Title II of the Unfunded Mandates Reform Act of 1995 (UMRA) (2 U.S.C. 1531–1538) establishes requirements for federal agencies to assess the effects of their regulatory actions on state, local, and tribal governments and the private sector. This rule does not impose any federal mandate on any state, local, or tribal government or the private sector within the meaning of UMRA.

Small Business Concerns Related to Board Enforcement Actions

HUD is cognizant that section 222 of the Small Business Regulatory Enforcement Fairness Act of 1996 (Pub. L. 104–121) (SBREFA) requires the Small Business and Agriculture Regulatory Enforcement Ombudsman to ''work with each agency with regulatory authority over small businesses to ensure that small business concerns that receive or are subject to an audit, on-site inspection, compliance assistance effort, or other enforcement related communication or contact by agency personnel are provided with a means to comment on the enforcement activity conducted by this personnel.'' To

implement this statutory provision, the Small Business Administration has requested that federal agencies include the following language on agency publications and notices that are provided to small business concerns at the time the enforcement action is undertaken. The language is as follows:

Your Comments Are Important

The Small Business and Agriculture Regulatory Enforcement Ombudsman and 10 Regional Fairness Boards were established to receive comments from small businesses about federal agency enforcement actions. The Ombudsman will annually evaluate the enforcement activities and rate each agency's responsiveness to small business. If you wish to comment on the enforcement actions of [insert agency name], you will find the necessary comment forms at *www.sba.gov/ombudsman* or call 1–888–REG–FAIR (1–888–734–3247).

In accordance with its notice describing HUD's actions on the implementation of SBREFA, which was published on May 21, 1998 (63 FR 28214), HUD will include the language cited above on notices implementing enforcement actions, to ensure that small entities have the full means to comment on the enforcement activity conducted by HUD.

List of Subjects in 24 CFR Part 30

Administrative practice and procedure, Grant programs—housing and community development, Loan programs—housing and community development, Mortgages, Penalties.

■ For the reasons discussed in the preamble, HUD amends 24 CFR part 30 as follows:

PART 30—CIVIL MONEY PENALTIES: CERTAIN PROHIBITED CONDUCT

■ 1. The authority citation for 24 CFR part 30 continues to read as follows:

Authority: 12 U.S.C. 1701q–1, 1703, 1723i, 1735f–14, 1735f–15; 15 U.S.C. 1717a; 28 U.S.C. 2461 note; 42 U.S.C. 1437z–1 and 3535(d).

■ 2. Revise § 30.1 to read as follows:

§ 30.1 Purpose and scope.

Unless provided for elsewhere in this title or under separate authority, this part implements HUD's civil money penalty provisions. The procedural rules for hearings under this part are those applicable to hearings in accordance with the Administrative Procedure Act, as set forth in 24 CFR part 26.

■ 3. Amend § 30.10 by adding, in alphabetical order, the definition of ''*Ability to pay*'' and revising the definition of ''*Material or Materially*'' to read as follows:

§ 30.10 Definitions.

* * * * *

Ability to pay. Determined based on an assessment of the respondent's resources available both presently and prospectively from which the Department could ultimately recover the total award, which may be predicted based on historical evidence.

* * * * *

Material or Materially. Having the natural tendency or potential to influence, or when considering the totality of the circumstances, in some significant respect or to some significant degree.

* * * * *

■ 4. Amend § 30.35 by removing paragraph (a)(14) and by redesignating paragraph (a)(15) as (a)(14).

■ 5. Revise § 30.45(d) to read as follows:

§ 30.45 Multifamily and section 202 or 811 mortgagors.

* * * * *

(d) *Acceptable management.* For purposes of this rule, management acceptable to the Secretary under 12 U.S.C. 1735f–15(c)(1)(B)(xiv) shall include:

(1) Fiscal management in accordance with HUD regulations and requirements;

(2) Handling of vacancies and tenanting in accordance with HUD regulations and requirements;

(3) Handling of rent collection in accordance with HUD regulations and requirements;

(4) Maintenance in accordance with HUD regulations and requirements;

(5) Compliance with HUD regulations and requirements on tenant organization; and

(6) Any other matters that pertain to proper management in accordance with HUD regulations and requirements.

* * * * *

■ 6. In § 30.68(b), revise paragraph (b) introductory text to read as follows:

§ 30.68 Section 8 owners.

* * * * *

(b) *General.* The Assistant Secretary for Housing—Federal Housing Commissioner, or his or her designee, or the Assistant Secretary for Public and Indian Housing, or his or her designee, may initiate a civil money penalty against any owner, any general partner of a partnership owner, or any agent employed to manage the property that has an identity of interest with the owner or the general partner of a partnership owner of a property receiving project-based assistance under section 8 of the United States Housing Act of 1937 (42 U.S.C. 1437f) for a knowing and material breach of a housing assistance payments contract. Examples of covered violations include, but are not limited to, the following:

* * * * *

■ 7. Revise § 30.70 to read as follows:

§ 30.70 Prepenalty notice.

(a) Prior to determining whether to issue a complaint under § 30.85, the official designated in subpart B of this part, or his or her designee (or the chairperson of the Mortgagee Review Board, or his or her designee, in actions under § 30.35), shall issue a written notice to the respondent. This prepenalty notice shall include the following:

(1) That HUD is considering seeking a civil money penalty;

(2) The specific violations alleged;

(3) The maximum civil money penalty that may be imposed;

(4) The opportunity to reply in writing to the designated program official within 30 days after receipt of the notice;

(5) That failure to respond within the 30-day period may result in issuance of a complaint under § 30.85 without consideration of any information that the respondent may wish to provide; and

(6) That if a complaint is issued under § 30.85, the respondent may request a hearing before an administrative law judge in accordance with § 30.95.

(b) *Obligation to preserve documents.* Upon receipt of the prepenalty notice, the respondent is required to preserve and maintain all documents or data, including electronically stored data, within his or her possession or control that may relate to the violations alleged in the prepenalty notice. The Department shall also preserve such documents or data upon the issuance of the prepenalty notice.

■ 8. Revise § 30.75 to read as follows:

§ 30.75 Response to prepenalty notice.

(a) The response shall be in a format prescribed in the prepenalty notice. The response shall address the factors set forth in § 30.80 and include any arguments opposing the imposition of a civil money penalty that the respondent may wish to present.

(b) In any case where respondent seeks to raise ability to pay as an affirmative defense or argument in mitigation, the respondent shall provide documentary evidence as part of its response.

■ 9. Revise § 30.80 to read as follows:

§ 30.80 Factors in determining amount of civil money penalty.

After determining that a respondent has committed a violation as described

in Subpart B of this part that subjects the respondent to liability under this part, the officials designated in subpart B of this part shall consider the following factors to determine the amount of penalty to seek against a respondent, if any:

(a) The gravity of the offense;

(b) Any history of prior offenses;

(c) The ability to pay the penalty, which ability shall be presumed unless specifically raised as an affirmative defense or mitigating factor by the respondent;

(d) The injury to the public;

(e) Any benefits received by the violator;

(f) The extent of potential benefit to other persons;

(g) Deterrence of future violations;

(h) The degree of the violator's culpability;

(i) With respect to Urban Homestead violations under § 30.30, the expenditures made by the violator in connection with any gross profit derived; and

(j) Such other matters as justice may require.

(k) In addition to the above factors, with respect to violations under §§ 30.45, 30.55, 30.60, and 30.68, the Assistant Secretary for Housing—Federal Housing Commissioner, or his or her designee, or the Assistant Secretary for Public and Indian Housing, or his or her designee, shall also consider:

(1) Any injury to tenants; and/or

(2) Any injury to lot owners.

(l) HUD may consider the factors listed in paragraphs (a) through (k) of this section to determine the appropriateness of imposing a penalty under § 30.35(c)(2); however, HUD cannot change the amount of the penalty under § 30.35(c)(2).

■ 10. In § 30.85, revise paragraphs (b) introductory text, (c), and (d) and add paragraph (e) to read as follows:

§ 30.85 Complaint.

* * * * *

(b) If a determination is made to seek a civil money penalty, government counsel shall issue a complaint to the respondent on behalf of the officials listed at subpart B of this part or the Mortgagee Review Board for violations under § 30.35. The complaint shall be served upon respondent and simultaneously filed with the Office of Administrative Law Judges, and shall state the following:

* * * * *

(c) A copy of this part and of 24 CFR part 26, subpart B, shall be included with the complaint.

(d) *Service of the complaint.* The complaint shall be served on the respondent by first class mail, personal delivery, or other means.

(e) Before taking an action under §§ 30.35 for violation of 12 U.S.C. § 1735f–14(b)(1)(D) or (F), 30.36, or 30.50 for violation of 12 U.S.C. 1723i(b)(1)(G) or (I), the Secretary shall inform the Attorney General of the United States, which may be accomplished by providing a copy of the complaint. The Secretary shall include in the body of the complaint a statement confirming that this action was taken.

■ 11. In § 30.90, revised paragraph (a), redesignate paragraph (b) as (c), and revise the new paragraph (b) to read as follows:

§ 30.90 Response to the complaint.

(a) *Request for a hearing.* If the respondent desires a hearing before an administrative law judge, the respondent shall submit a request for a hearing to HUD and the Office of Administrative Law Judges no later than 15 days following receipt of the complaint, as required by statute. This mandated period cannot be extended.

(b) *Answer.* In any case in which the respondent has requested a hearing, the respondent shall serve upon HUD and file with the Office of Administrative Law Judges a written answer to the complaint within 30 days of receipt of the complaint, unless such time is extended by the administrative law judge for good cause. The answer shall include the admission or denial of each allegation of liability made in the complaint; any defense on which the respondent intends to rely; any reasons why the civil money penalty should be less than the amount sought in the complaint, based on the factors listed at § 30.80; and the name, address, and telephone number of the person who will act as the respondent's representative, if any.

* * * * *

■ 12. Revise § 30.95 to read as follows:

§ 30.95 Hearings.

Hearings under this part shall be conducted in accordance with the procedures applicable to hearings in accordance with the Administrative Procedure Act, set forth in 24 CFR part 26.

■ 13. Revise § 30.100 to read as follows:

§ 30.100 Settlement of a civil money penalty action.

The officials listed at subpart B of this part, or their designees (or the Mortgagee Review Board, or designee, for violations under § 30.35), are authorized to enter into settlement agreements resolving civil money penalty actions that may be brought under part 30.

Dated: January 9, 2009.

Roy A. Bernardi,

Deputy Secretary.

[FR Doc. E9–851 Filed 1–14–09; 8:45 am]

BILLING CODE 4210–67–P

Federal Register

Thursday,
January 15, 2009

Part V

The President

Proclamation 8338—Religious Freedom Day, 2009

Federal Register
Vol. 74, No. 10
Thursday, January 15, 2009

Presidential Documents

Title 3—

The President

Proclamation 8338 of January 13, 2009

Religious Freedom Day, 2009

By the President of the United States of America

A Proclamation

Religious freedom is the foundation of a healthy and hopeful society. On Religious Freedom Day, we recognize the importance of the 1786 passage of the Virginia Statute for Religious Freedom. We also celebrate the first liberties enshrined in our Constitution's Bill of Rights, which guarantee the free exercise of religion for all Americans and prohibit an establishment of religion.

Our Nation was founded by people seeking haven from religious persecution, and the religious liberty they found here remains one of this land's greatest blessings. As Americans, we believe that all people have inherent dignity and worth. Though we may profess different creeds and worship in different manners and places, we respect each other's humanity and expression of faith. People with diverse views can practice their faiths here while living together in peace and harmony, carrying on our Nation's noble tradition of religious freedom.

The United States also stands with religious dissidents and believers from around the globe who practice their faith peacefully. Freedom is not a grant of government or a right for Americans alone; it is the birthright of every man, woman, and child throughout the world. No human freedom is more fundamental than the right to worship in accordance with one's conscience.

Religious Freedom Day is an opportunity to celebrate our legacy of religious liberty, foster a culture of tolerance and peace, and renew commitments to ensure that every person on Earth can enjoy these basic human rights.

NOW, THEREFORE, I, GEORGE W. BUSH, President of the United States of America, by virtue of the authority vested in me by the Constitution and laws of the United States, do hereby proclaim January 16, 2009, as Religious Freedom Day. I call on all Americans to reflect on the great blessing of religious liberty, endeavor to preserve this freedom for future generations, and commemorate this day with appropriate events and activities.

IN WITNESS WHEREOF, I have hereunto set my hand this thirteenth day of January, in the year of our Lord two thousand nine, and of the Independence of the United States of America the two hundred and thirty-third.

[FR Doc. E9–1032
Filed 1–14–09; 11:15 am]
Billing code 3195–W9–P

Reader Aids

Federal Register

Vol. 74, No. 10

Thursday, January 15, 2009

CUSTOMER SERVICE AND INFORMATION

Federal Register/Code of Federal Regulations	
General Information, indexes and other finding aids	**202–741–6000**
Laws	**741–6000**
Presidential Documents	
Executive orders and proclamations	**741–6000**
The United States Government Manual	**741–6000**
Other Services	
Electronic and on-line services (voice)	**741–6020**
Privacy Act Compilation	**741–6064**
Public Laws Update Service (numbers, dates, etc.)	**741–6043**
TTY for the deaf-and-hard-of-hearing	**741–6086**

ELECTRONIC RESEARCH

World Wide Web

Full text of the daily Federal Register, CFR and other publications is located at: **http://www.gpoaccess.gov/nara/index.html**

Federal Register information and research tools, including Public Inspection List, indexes, and links to GPO Access are located at: **http://www.archives.gov/federal_register**

E-mail

FEDREGTOC-L (Federal Register Table of Contents LISTSERV) is an open e-mail service that provides subscribers with a digital form of the Federal Register Table of Contents. The digital form of the Federal Register Table of Contents includes HTML and PDF links to the full text of each document.

To join or leave, go to **http://listserv.access.gpo.gov** and select *Online mailing list archives, FEDREGTOC-L, Join or leave the list (or change settings);* then follow the instructions.

PENS (Public Law Electronic Notification Service) is an e-mail service that notifies subscribers of recently enacted laws.

To subscribe, go to **http://listserv.gsa.gov/archives/publaws-l.html** and select *Join or leave the list (or change settings);* then follow the instructions.

FEDREGTOC-L and **PENS** are mailing lists only. We cannot respond to specific inquiries.

Reference questions. Send questions and comments about the Federal Register system to: **fedreg.info@nara.gov**

The Federal Register staff cannot interpret specific documents or regulations.

Reminders. Effective January 1, 2009, the Reminders, including Rules Going Into Effect and Comments Due Next Week, no longer appear in the Reader Aids section of the Federal Register. This information can be found online at **http://www.regulations.gov.**

CFR Checklist. Effective January 1, 2009, the CFR Checklist no longer appears in the Federal Register. This information can be found online at **http://bookstore.gpo.gov/.**

FEDERAL REGISTER PAGES AND DATE, JANUARY

1–200 2
201–392 5
393–608 6
609–768 7
769–854 8
855–1142 9
1143–1582 12
1583–1870 13
1871–2292 14
2293–2756 15

CFR PARTS AFFECTED DURING JANUARY

At the end of each month, the Office of the Federal Register publishes separately a List of CFR Sections Affected (LSA), which lists parts and sections affected by documents published since the revision date of each title.

3 CFR

Proclamations:
8333 609
8334 611
8335 1557
8336 1565
8337 1577
8338 2753

Executive Orders:
13241 (amended by 13484) 2285
13484 2285
13485 2287
13486 2289

Administrative Orders:
Memorandums:
Memorandum of December 23, 2008 1585
Memorandum of March 19, 2002 (superseded by EO 13485) 2287
Presidential Determinations:
No. 2009-10 of January 1, 2009 1583

5 CFR

532 1871

Proposed Rules:
532 1948

7 CFR

60 2658
65 2658
246 544
662 1587
966 855
1466 2293
1467 2317
1780 393
1980 1872

Proposed Rules:
305 651
319 651
625 1954
985 1971
1000 1976
1033 1976
1780 411

8 CFR

103 395
212 395
214 395
245 395
299 395
1001 201
1003 201
1274a 2337
1292 201

9 CFR

71 1
83 1
93 1

Proposed Rules:
71 1634
77 1634
78 1634
79 1634
80 1634

10 CFR

72 1143
150 1872
431 1091

Proposed Rules:
430 1643
431 ..... 411, 1992

12 CFR

622 2340
1202 2342
1250 2347
1773 2347

13 CFR

Proposed Rules:
120 1992
121 1153
125 1153
127 1153
134 1153

14 CFR

11 201
25 1143
71 ..... 769, 1872, 1874, 2350
95 396
97 ..... 202, 205
121 2351

Proposed Rules:
39 ..... 664, 1153, 1155, 1158, 1159, 1164, 1646, 1649, 2425
65 1280
71 ..... 1651, 1652, 2427
119 1280
121 1280
135 1280
142 1280

15 CFR

742 2355
744 ..... 770, 2355
746 2355
806 1590

Proposed Rules:
736 413

16 CFR

1 857
3 1804

4 1804
Proposed Rules:
1500 ....2428, 2433, 2435, 2439

17 CFR
210 2158
211 2158
229 2158
249 2158

18 CFR
Proposed Rules:
284 2443

21 CFR
56 2358
73 207
101 207
520 1146
558 6
866 6
Proposed Rules:
131 2443

22 CFR
42 2369
215 9

23 CFR
Proposed Rules:
511 1993

24 CFR
30 2750
203 2369
1003 1868
3500 2369
4001 617

26 CFR
1 340
301 ....340, 2370
602 340
Proposed Rules:
1 236
31 789
301 236

27 CFR
478 1875
555 1878

28 CFR
545 1892
550 1892

29 CFR
1910 858
1915 858
1917 858
1918 858
1926 858
2560 ....17, 2373
4044 772

30 CFR
926 217
Proposed Rules:
936 868
938 2005

33 CFR
165 2373

34 CFR
99 400

37 CFR
Proposed Rules:
201 666

38 CFR
Proposed Rules:
3 2016

39 CFR
3020 ....219, 622, 858

40 CFR
19 626
51 2376
52 ....1146, 1148, 1591, 1899, 1903, 1927, 2376, 2383, 2387, 2392
81 1148
82 21
180 ....629, 634, 637
Proposed Rules:
51 2460
52 ....667, 2018, 2460
112 2461
257 41

41 CFR
102-42 2395
301-10 ....2396, 2397
Proposed Rules:
102-192 870

42 CFR
422 1494
423 1494
424 166
Proposed Rules:
423 1550

43 CFR
3500 637

44 CFR
64 ....641, 773
65 775
67 ....401, 778
Proposed Rules:
67 ....238, 241, 244, 245, 246, 247, 789

45 CFR
46 2399

46 CFR
401 220
Proposed Rules:
197 414

47 CFR
73 ....1593, 2405
79 1594
Proposed Rules:
73 1653
74 61
79 1654

48 CFR
Ch. 1 ....2710, 2746
1 ....2712, 2733
2 ....1937, 2712, 2713
3 2713
4 ....2712, 2724
5 2731
6 2731
7 2733
11 2740
12 ....2712, 2713, 2741
15 ....2724, 2746
17 2724
18 2733
22 ....1937, 2724, 2741, 2745
23 ....2713, 2740
24 2731
25 ....2713, 2745
28 2733
32 2733
33 2733
39 2740
43 2733
50 2733
52 ....1937, 2712, 2713, 2724, 2733, 2740, 2741, 2745
202 2407
203 ....2407, 2408, 2410
204 2411
209 ....2408, 2413, 2414
212 2415
216 2416
218 2407
225 ....2417, 2418
236 2417
237 2421
252 ....2408, 2410, 2411, 2417, 2418, 2421, 2422
542 863
543 864
552 ....863, 864
Proposed Rules:
22 872
52 872

49 CFR
171 ....1770, 2200
172 ....1770, 2200
173 ....1770, 2200
174 1770
175 2200
176 2200
178 2200
179 1770
213 1605
580 643
Proposed Rules:
1201 248
1242 248
1301 416

50 CFR
216 ....1456, 1607
224 1937
300 1607
622 ....1148, 1621
640 1148
648 233
679 ....233, 868, 1631, 1946
Proposed Rules:
17 ....419, 2465
32 1838
223 249
224 249
253 2467
300 ....2019, 2032
600 2467
648 2478
660 252
679 254