AUTHENTICATED
U.S. GOVERNMENT
INFORMATION
GPO

# FEDERAL REGISTER

Vol. 80 Thursday,
No. 204 October 22, 2015

Pages 63889–64304

OFFICE OF THE FEDERAL REGISTER

The **FEDERAL REGISTER** (ISSN 0097–6326) is published daily, Monday through Friday, except official holidays, by the Office of the Federal Register, National Archives and Records Administration, Washington, DC 20408, under the Federal Register Act (44 U.S.C. Ch. 15) and the regulations of the Administrative Committee of the Federal Register (1 CFR Ch. I). The Superintendent of Documents, U.S. Government Publishing Office, Washington, DC 20402 is the exclusive distributor of the official edition. Periodicals postage is paid at Washington, DC.

The **FEDERAL REGISTER** provides a uniform system for making available to the public regulations and legal notices issued by Federal agencies. These include Presidential proclamations and Executive Orders, Federal agency documents having general applicability and legal effect, documents required to be published by act of Congress, and other Federal agency documents of public interest.

Documents are on file for public inspection in the Office of the Federal Register the day before they are published, unless the issuing agency requests earlier filing. For a list of documents currently on file for public inspection, see *www.ofr.gov.*

**The seal of the National Archives and Records Administration authenticates the Federal Register** as the official serial publication established under the Federal Register Act. Under 44 U.S.C. 1507, the contents of the **Federal Register** shall be judicially noticed.

The **Federal Register** is published in paper and on 24x microfiche. It is also available online at no charge at *www.fdsys.gov*, a service of the U.S. Government Publishing Office.

The online edition of the **Federal Register** is issued under the authority of the Administrative Committee of the Federal Register as the official legal equivalent of the paper and microfiche editions (44 U.S.C. 4101 and 1 CFR 5.10). It is updated by 6:00 a.m. each day the **Federal Register** is published and includes both text and graphics from Volume 59, 1 (January 2, 1994) forward. For more information, contact the GPO Customer Contact Center, U.S. Government Publishing Office. Phone 202-512-1800 or 866-512-1800 (toll free). E-mail, *gpocusthelp.com.*

The annual subscription price for the **Federal Register** paper edition is $749 plus postage, or $808, plus postage, for a combined **Federal Register, Federal Register** Index and List of CFR Sections Affected (LSA) subscription; the microfiche edition of the **Federal Register** including the **Federal Register** Index and LSA is $165, plus postage. Six month subscriptions are available for one-half the annual rate. The prevailing postal rates will be applied to orders according to the delivery method requested. The price of a single copy of the daily **Federal Register,** including postage, is based on the number of pages: $11 for an issue containing less than 200 pages; $22 for an issue containing 200 to 400 pages; and $33 for an issue containing more than 400 pages. Single issues of the microfiche edition may be purchased for $3 per copy, including postage. Remit check or money order, made payable to the Superintendent of Documents, or charge to your GPO Deposit Account, VISA, MasterCard, American Express, or Discover. Mail to: U.S. Government Publishing Office—New Orders, P.O. Box 979050, St. Louis, MO 63197-9000; or call toll free 1-866-512-1800, DC area 202-512-1800; or go to the U.S. Government Online Bookstore site, see *bookstore.gpo.gov.*

There are no restrictions on the republication of material appearing in the **Federal Register.**

**How To Cite This Publication:** Use the volume number and the page number. Example: 80 FR 12345.

**Postmaster:** Send address changes to the Superintendent of Documents, Federal Register, U.S. Government Publishing Office, Washington, DC 20402, along with the entire mailing label from the last issue received.

## SUBSCRIPTIONS AND COPIES

**PUBLIC**

**Subscriptions:**

| | |
|---|---|
| Paper or fiche | **202–512–1800** |
| Assistance with public subscriptions | **202–512–1806** |
| **General online information** | **202–512–1530; 1–888–293–6498** |

**Single copies/back copies:**

| | |
|---|---|
| Paper or fiche | **202–512–1800** |
| Assistance with public single copies | **1–866–512–1800 (Toll-Free)** |

**FEDERAL AGENCIES**

**Subscriptions:**

Assistance with Federal agency subscriptions:

| | |
|---|---|
| Email | *FRSubscriptions@nara.gov* |
| Phone | **202–741–6000** |

Printed on recycled paper.

# Contents

**Federal Register**

Vol. 80, No. 204

Thursday, October 22, 2015

**Agricultural Marketing Service**
**RULES**
Defining Bona Fide Cotton Spot Markets for the World Cotton Futures Contract, 63889–63890
Soybean Promotion and Research:
Order to Adjust Representation on the United Soybean Board; Amendment, 63909–63910

**Agriculture Department**
*See* Agricultural Marketing Service
*See* Farm Service Agency

**Centers for Disease Control and Prevention**
**NOTICES**
Proposed Vaccine Information Materials:
HPV (Human Papillomavirus) Gardasil–9 Vaccine, 64002–64003

**Centers for Medicare & Medicaid Services**
**PROPOSED RULES**
Basic Health Programs:
Federal Funding Methodology for Program Years 2017 and 2018, 63936–63950

**Children and Families Administration**
**NOTICES**
Agency Information Collection Activities; Proposals, Submissions, and Approvals, 64003–64005

**Coast Guard**
**RULES**
Drawbridge Operations:
English Kills, Brooklyn, NY, 63918–63919
Willamette River, Portland, OR, 63919
Safety Zones:
Ironman 70.3 Miami; Miami, FL, 63919–63921
Mississippi River between Mile 467.0 and 472.0; Transylvania, LA, 63923–63926
Mississippi River between Mile 488.0 and 480.5; Lake Providence, LA, 63926–63928
Pago Pago Harbor, American Samoa, 63921–63923
Special Local Regulations:
Battle of Hampton, Hampton River, Hampton, VA, 63916–63918
**PROPOSED RULES**
Liquid Chemical Categorization Updates, 64192–64259

**Commerce Department**
*See* International Trade Administration
*See* National Oceanic and Atmospheric Administration

**Commodity Futures Trading Commission**
**NOTICES**
Agency Information Collection Activities; Proposals, Submissions, and Approvals, 63971–63972

**Defense Acquisition Regulations System**
**RULES**
Defense Federal Acquisition Regulation Supplements:
Network Penetration Reporting and Contracting for Cloud Services, 63928–63929

**Defense Department**
*See* Defense Acquisition Regulations System
*See* Engineers Corps

**Delaware River Basin Commission**
**NOTICES**
Meetings, 63973–63974
Proposed Methodology for the 2016 Delaware River and Bay Water Quality Assessment Report, 63973

**Education Department**
**NOTICES**
Agency Information Collection Activities; Proposals, Submissions, and Approvals:
Application for Grants under the Educational Opportunity Centers Program, 63988
Meetings:
National Board for Education Sciences, 63974–63975
Proposed Priorities, Requirements, Definitions, and Selection Criteria:
Performance Partnership Pilots for Disconnected Youth, 63975–63987

**Employment and Training Administration**
**NOTICES**
Worker Adjustment Assistance Eligibility; Determinations, 64014–64016
Worker Adjustment Assistance Eligibility; Investigations, 64012–64014

**Energy Department**
*See* Federal Energy Regulatory Commission
**NOTICES**
Meetings:
Environmental Management Site-Specific Advisory Board, Nevada, 63989
Environmental Management Site-Specific Advisory Board, Oak Ridge Reservation, 63990
Environmental Management Site-Specific Advisory Board, Paducah, 63988–63989
Environmental Management Site-Specific Advisory Board, Savannah River Site, 63989–63990

**Engineers Corps**
**NOTICES**
Environmental Impact Statements; Availability, etc.:
Final Integrated Feasibility Report, Los Angeles River Ecosystem Restoration Study, City of Los Angeles, Los Angeles County, CA, 63973
Proposed Changes in Levels of Service at Locks and Dams on the Ouachita and Black Rivers, 63972

**Environmental Protection Agency**
**RULES**
Greenhouse Gas Reporting:
Petroleum and Natural Gas Systems; Revisions and Confidentiality Determinations, 64262–64298
National Pollutant Discharge Elimination System Electronic Reporting, 64064–64158

PROPOSED RULES
Air Quality State Implementation Plans; Approvals and Promulgations:
Minnesota and Michigan; Revision to Taconite Federal Implementation Plan, 64160–64189
Amendments to Regional Consistency Regulations, 63935–63936
NOTICES
Administrative Agreements:
Post Removal Site Control Activities by Bona Fide Prospective Purchaser, Rocky Flats Industrial Park Superfund Site, Jefferson County, CO, 63995–63996
Meetings:
Board of Scientific Counselors Chemical Safety for Sustainability Subcommittee; Public Teleconference, 63994–63995
Proposed Settlement Agreements:
WildEarth Guardians; Sierra Club, 63993–63994

**Farm Service Agency**
RULES
Agriculture Priorities and Allocations System, 63890–63909

**Federal Aviation Administration**
RULES
Clarification of Applicability of Aircraft Registration Requirements for Unmanned Aircraft Systems and Request for Information Regarding Electronic Registration, 63912–63914
NOTICES
Agency Information Collection Activities; Proposals, Submissions, and Approvals:
Application for Certificate of Waiver or Authorization, 64052
Hazardous Materials Training Requirements, 64055
Suspected Unapproved Parts Notification, 64054–64055
Training and Qualification Requirements for Check Airmen and Flight Instructors, 64051–64052
Environmental Assessments; Availability, etc.:
Proposed Part 139 Operating Certificate and Related Actions; Public Hearing at Paulding Northwest Atlanta Airport, 64053
Meetings:
Fifth RTCA Special Committee 232 Airborne Selective Calling Equipment, 64053
Ninth RTCA Special Committee 228 Minimum Operational Performance Standards for Unmanned Aircraft Systems, 64054
RTCA Special Committee 222 AMS(R)S, 64051
RTCA Special Committee 231 Terrain Awareness Warning Systems, 64051
RTCA Special Committee Aeronautical Databases Joint with EUROCAE WG–44—Aeronautical Databases, 64050–64051
RTCA Tactical Operations Committee, 64050
Records of Decision:
Proposed Replacement Airport Serving D–III Aircraft, Williston, ND, 64053–64054

**Federal Election Commission**
NOTICES
Meetings; Sunshine Act, 63996

**Federal Emergency Management Agency**
NOTICES
Guidelines for Implementing Executive Order 11988, Floodplain Management, and Executive Order 13690, Establishing a Federal Flood Risk Management Standard and a Process for Further Soliciting and Considering Stakeholder Input, 64008

**Federal Energy Regulatory Commission**
NOTICES
Applications:
Pacific Gas and Electric Co., 63992
Combined Filings, 63991–63993

**Federal Housing Finance Agency**
NOTICES
Establishment of Housing Price Index, 63996–64000

**Federal Reserve System**
NOTICES
Agency Information Collection Activities; Proposals, Submissions, and Approvals, 64000–64002
Changes in Bank Control:
Acquisitions of Shares of a Bank or Bank Holding Company, 64000
Formations of, Acquisitions by, and Mergers of Bank Holding Companies, 64000

**Federal Retirement Thrift Investment Board**
NOTICES
Meetings; Sunshine Act, 64002

**Fish and Wildlife Service**
NOTICES
Environmental Assessments; Availability, etc.:
Dallas Zoo Management; Dallas, TX, 64008–64009

**Food and Drug Administration**
NOTICES
Guidance for Industry and Staff:
Selection of the Appropriate Package Type Terms and Recommendations for Labeling Injectable Medical Products Packaged in Multiple-Dose, Single-Dose, and Single-Patient-Use Containers for Human Use, 64005–64007

**Health and Human Services Department**
*See* Centers for Disease Control and Prevention
*See* Centers for Medicare & Medicaid Services
*See* Children and Families Administration
*See* Food and Drug Administration
*See* National Institutes of Health

**Homeland Security Department**
*See* Coast Guard
*See* Federal Emergency Management Agency
RULES
Commonwealth of Northern Mariana Islands-Only Transitional Worker Numerical Limitation:
Fiscal Year 2016, 63911–63912

**Interior Department**
*See* Fish and Wildlife Service
*See* Land Management Bureau
*See* Surface Mining Reclamation and Enforcement Office

**International Trade Administration**
NOTICES
Subsidy Programs Provided by Countries Exporting Softwood Lumber and Softwood Lumber Products to the U.S., 63957

**International Trade Commission**
NOTICES
Complaint; Solicitation of Comments Relating to the Public Interest, 64011–64012
Complaints:
Certain Air Mattress Systems, Components Thereof, and Methods of Using the Same, 64010–64011

**Labor Department**
*See* Employment and Training Administration
NOTICES
Agency Information Collection Activities; Proposals, Submissions, and Approvals:
Ground Control Plans for Surface Coal Mines and Surface Work Areas of Underground Coal Mines, 64019
Health Standards for Diesel Particulate Matter Exposure in Underground Metal and Nonmetal Mines, 64018
Migrant and Seasonal Farmworker Monitoring Report and One-Stop Career Center Complaint/Referral Record, 64020
Prohibited Transaction Class Exemption for Cross-Trades of Securities by Index and Model-Driven Funds, 64016–64017
Safety Standards for Roof Bolts in Metal and Nonmetal Mines and Underground Coal Mines, 64017
Unemployment Compensation for Federal Employees, 64020–64021
Meetings:
Advisory Committee on Veterans' Employment, Training and Employer Outreach, 64021–64022

**Land Management Bureau**
NOTICES
Filings of Plats of Surveys:
Oregon/Washington, 64010
Plats of Survey:
Eastern States, 64009–64010

**Management and Budget Office**
NOTICES
Circular No. A–130, Managing Information as a Strategic Resource; Draft Revisions, 64022

**National Aeronautics and Space Administration**
NOTICES
Charter Renewals:
Aerospace Safety Advisory Panel, 64022–64023
International Space Station National Laboratory Advisory Committee, 64023
Meetings:
NASA Advisory Council; Aeronautics Committee, 64024
NASA Advisory Council; Institutional Committee, 64023

**National Credit Union Administration**
PROPOSED RULES
Investment and Deposit Activities—Bank Notes, 63932–63933

**National Highway Traffic Safety Administration**
NOTICES
Petitions for Inconsequential Noncompliance:
Cooper Tire and Rubber Co., 64057–64058
Ford Motor Co., 64058–64060
Mack Trucks, Inc., 64056–64057

**National Institutes of Health**
NOTICES
Meetings:
Center for Scientific Review, 64007

**National Oceanic and Atmospheric Administration**
RULES
Fisheries of the Exclusive Economic Zone Off Alaska:
Pacific Ocean Perch in the Bering Sea Subarea of the Bering Sea and Aleutian Islands Management Area, 63930–63931
Fisheries of the Northeastern United States:
Atlantic Herring Fishery; Georges Bank Haddock Catch Cap Harvested, 63929–63930
Schedule of Fees for Access to NOAA Environmental Data, Information, and Related Products and Services, 63914–63916
PROPOSED RULES
Fisheries of the Exclusive Economic Zone Off Alaska:
Bering Sea and Aleutian Islands Crab Rationalization Program, 63950–63956
NOTICES
Proposed Amendment to the Puerto Rico Coastal Zone Management Program, 63957–63958
Takes of Marine Mammals Incidental to Specified Activities:
U.S. Navy Civilian Port Defense Activities at the Ports of Los Angeles/Long Beach, CA, 63958–63971

**National Science Foundation**
NOTICES
Agency Information Collection Activities; Proposals, Submissions, and Approvals:
Biological Sciences Proposal Classification Form, 64024–64025

**Nuclear Regulatory Commission**
NOTICES
Environmental Impact Statements; Availability, etc.:
Construction Permit Application for the SHINE Medical Radioisotope Production Facility, 64025
Meetings:
Advisory Committee on Reactor Safeguards Subcommittee on Metallurgy and Reactor Fuels, 64025–64026

**Pension Benefit Guaranty Corporation**
NOTICES
Agency Information Collection Activities; Proposals, Submissions, and Approvals:
Qualified Domestic Relations Orders, 64026–64027

**Postal Regulatory Commission**
NOTICES
New Postal Products, 64027

**Presidential Documents**
PROCLAMATIONS
Special Observances:
National Character Counts Week (Proc. 9351), 64299–64302
National Forest Products Week (Proc. 9352), 64303–64304

**Securities and Exchange Commission**
NOTICES
Meetings; Sunshine Act, 64030–64031, 64038

Orders:
Temporary Conditional Exemption for Nationally Recognized Statistical Rating Organizations from Requirements under the Securities Exchange Act, 64031–64033
Self-Regulatory Organizations; Proposed Rule Changes:
Financial Industry Regulatory Authority, Inc., 64039–64041
International Securities Exchange, LLC, 64037–64038, 64041–64046
ISE Gemini, LLC, 64033–64037, 64046–64048
NYSE Arca, Inc., 64027–64028
Options Clearing Corp., 64028–64030

**Small Business Administration**
**NOTICES**
Agency Information Collection Activities; Proposals, Submissions, and Approvals, 64048

**Social Security Administration**
**NOTICES**
Agency Information Collection Activities; Proposals, Submissions, and Approvals, 64048–64049

**State Department**
**NOTICES**
Meetings:
Overseas Security Advisory Council, 64049–64050

**Surface Mining Reclamation and Enforcement Office**
**PROPOSED RULES**
Virginia Regulatory Program, 63933–63935

**Transportation Department**
*See* Federal Aviation Administration
*See* National Highway Traffic Safety Administration
**RULES**
Clarification of Applicability of Aircraft Registration Requirements for Unmanned Aircraft Systems and Request for Information Regarding Electronic Registration, 63912–63914
**NOTICES**
Agency Information Collection Activities; Proposals, Submissions, and Approvals, 64060–64061

**Veterans Affairs Department**
**NOTICES**
Preliminary Draft Final Master Plan:
West Los Angeles VA Medical Center, 64061–64062

## Separate Parts In This Issue

**Part II**
Environmental Protection Agency, 64064–64158

**Part III**
Environmental Protection Agency, 64160–64189

**Part IV**
Homeland Security Department, Coast Guard, 64192–64259

**Part V**
Environmental Protection Agency, 64262–64298

**Part VI**
Presidential Documents, 64299–64304

## Reader Aids

Consult the Reader Aids section at the end of this issue for phone numbers, online resources, finding aids, and notice of recently enacted public laws.

To subscribe to the Federal Register Table of Contents LISTSERV electronic mailing list, go to http://listserv.access.gpo.gov and select Online mailing list archives, FEDREGTOC-L, Join or leave the list (or change settings); then follow the instructions.

## CFR PARTS AFFECTED IN THIS ISSUE

A cumulative list of the parts affected this month can be found in the Reader Aids section at the end of this issue.


**3 CFR**

**Proclamations:**

9351 ..... 64301
9352 ..... 64303

**7 CFR**

27 ..... 63889
789 ..... 63890
1220 ..... 63909

**8 CFR**

214 ..... 63911

**12 CFR**

**Proposed Rules:**

703 ..... 63932

**14 CFR**

Ch. I (2 documents) ..... 63912

**15 CFR**

950 ..... 63914

**30 CFR**

**Proposed Rules:**

946 ..... 63933

**33 CFR**

100 ..... 63916
117 (2 documents) ..... 63918, 63919
165 (4 documents) ..... 63919, 63921, 63923, 63926

**40 CFR**

9 ..... 64064
98 ..... 64262
122 ..... 64064
123 ..... 64064
124 ..... 64064
127 ..... 64064
403 ..... 64064
501 ..... 64064
503 ..... 64064

**Proposed Rules:**

52 ..... 64160
56 ..... 63935

**42 CFR**

**Proposed Rules:**

600 ..... 63936

**46 CFR**

**Proposed Rules:**

30 ..... 64192
150 ..... 64192
153 ..... 64192

**48 CFR**

202 ..... 63928
204 ..... 63928
212 ..... 63928
239 ..... 63928
252 ..... 63928

**50 CFR**

648 ..... 63929
679 ..... 63930

**Proposed Rules:**

680 ..... 63950

# Rules and Regulations

Federal Register

Vol. 80, No. 204

Thursday, October 22, 2015

This section of the FEDERAL REGISTER contains regulatory documents having general applicability and legal effect, most of which are keyed to and codified in the Code of Federal Regulations, which is published under 50 titles pursuant to 44 U.S.C. 1510.

The Code of Federal Regulations is sold by the Superintendent of Documents. Prices of new books are listed in the first FEDERAL REGISTER issue of each week.

## DEPARTMENT OF AGRICULTURE

### Agricultural Marketing Service

### 7 CFR Part 27

**[Doc. #AMS–CN–14–0050]**

**RIN 0581–AD38**

## Defining Bona Fide Cotton Spot Markets for the World Cotton Futures Contract

**AGENCY:** Agricultural Marketing Service, USDA.

**ACTION:** Final rule.

**SUMMARY:** The Agricultural Marketing Service (AMS) is amending the regulatory language to designate which bona fide cotton spot markets will be used to determine actual commercial differences in value for various grades above or below the basis grade in the settlement of World cotton futures contracts on the Intercontinental Exchange (ICE). Designating bona fide cotton spot markets for the World cotton futures contract in the regulatory language will allow for AMS to collect spot market price data and publish spot quotes for the settlement of these specific contracts.

**DATES:** *Effective Date:* November 23, 2015.

**FOR FURTHER INFORMATION CONTACT:** Darryl Earnest, Deputy Administrator, Cotton & Tobacco Program, AMS, USDA, 3275 Appling Road, Room 11, Memphis, TN 38133. Telephone (901) 384–3060, facsimile (901) 384–3021, or email *darryl.earnest@ams.usda.gov.*

**SUPPLEMENTARY INFORMATION:**

### Executive Order 12866 and Executive Order 13563

Executive Orders 12866 and 13563 direct agencies to access all costs and benefits of available regulatory alternatives and, if regulation is necessary, to select regulatory approaches that maximize net benefits (including potential economic, environmental, public health, and safety effects, distributive impacts and equity). Executive Order 13563 emphasizes the importance of quantifying both costs and benefits, reducing costs, harmonizing rules, and promoting flexibility. This action has been designated as a ''non-significant regulatory action'' under section 3(f) of Executive Order 12866 and therefore has not been reviewed by the Office of Management and Budget (OMB).

### Executive Order 13175

This action has been reviewed in accordance with the requirements of Executive Order 13175, Consultation and Coordination with Indian Tribal Governments. The review reveals that this regulation would not have substantial and direct effects on Tribal governments and would not have significant Tribal implications.

### Executive Order 12988

This final rule has been reviewed under Executive Order 12988, Civil Justice Reform. It is not intended to have retroactive effect. There are no administrative procedures that must be exhausted prior to any judicial challenge to the provisions of this rule.

### Regulatory Flexibility Act

Pursuant to requirements set forth in the Regulatory Flexibility Act (RFA) (5 U.S.C. 601–612), AMS has considered the economic impact of this action on small entities and has determined that its implementation will not have a significant economic impact on a substantial number of small businesses.

The purpose of the RFA is to fit regulatory actions to the scale of businesses subject to such actions so that small businesses will not be disproportionately burdened. There are approximately sixty cotton merchant organizations of various sizes active in trading U.S. cotton. Many of these cotton merchants are small businesses under the criteria established by the Small Business Administration (13 CFR 121.201). Small business entities that are merchants in the U.S. cotton industry are defined as having fewer than 100 employees. Amendments to the regulation concerning bona fide cotton spot market designations will not significantly affect small businesses as defined in the RFA because:

(1) How spot prices are estimated are not expected to be impacted by this action;

(2) Business practices of the U.S. cotton industry are not expected to change as a result of this action;

(3) Costs associated with providing market news services will not be significantly changed by this action;

(4) Market news services are paid for by appropriated funds, therefore users are not charged fees for the provision of the services.

### Paperwork Reduction Act

In compliance with OMB regulations (5 CFR part 1320), which implement the Paperwork Reduction Act (PRA) (44 U.S.C. 3501), the information collection requirements contained in the provisions to be amended by this proposed rule have been previously approved by OMB and were assigned OMB control number 0581–0009, Cotton Classification and Market News Service.

### Background

The Secretary of Agriculture is authorized under the United States Cotton Futures Act (7 U.S.C. 15b) to designate at least five bona fide cotton spot markets from which cotton price information can be collected. A spot market—also called the ''cash market'' or ''physical market''—is a market where commodities are sold on the spot for cash at current market prices and delivered immediately. Designation of these bona fide cotton spot markets and the determination of which counties and states compose each of these spot markets was most recently published in the **Federal Register** on April 30, 2013 (78 FR 25181). For each of these bona fide cotton spot markets, the Cotton and Tobacco Program of the Agricultural Marketing Service collects market price information under the United States Cotton Futures Act (7 U.S.C. 15b), the Cotton Statistics and Estimates Act (7 U.S.C. 473b) and the Agricultural Marketing Act of 1946 (7 U.S.C. 1622(g)). This price information is then used to calculate price differences for the settlement of cotton futures contracts.

In order to better manage price risk in the global cotton market, the American Cotton Shippers Association (ACSA) and the International Cotton Association (ICA) requested that the Intercontinental Exchange (ICE) offer a World cotton futures contract. In response, ICE

announced its intention to begin offering World cotton contracts beginning in the fourth quarter of 2015. To determine actual commercial differences in value for various grades above or below the basis grade in the settlement of this new World cotton futures contract, AMS was asked by these same stakeholders to collect and publish cotton spot market price information relevant to the World cotton contract. Therefore, AMS is amending § 27.94 to designate the same bona fide cotton spot markets for the World cotton futures contract as have been designated for the No. 2 cotton futures contract.

**Summary of Comments**

A proposed rule was published in the **Federal Register** on December 16, 2014, with a comment period of December 16, 2014 through January 16, 2015 (79 FR 74654). No comments were received by AMS.

The U.S. cotton industry and ICE requested that AMS, Cotton and Tobacco Program to collect and publish cotton spot market price information relevant to the World cotton contract prior to the offering of this new futures contract, which is scheduled for the fourth quarter of 2015.

**List of Subjects in 7 CFR Part 27**

Commodity futures, Cotton.

For the reasons set forth in the preamble, 7 CFR part 27 is amended as follows:

## PART 27—[Amended]

■ 1. The authority citation for 7 CFR part 27 continues to read as follows:

**Authority:** 7 U.S.C. 15b, 7 U.S.C. 473b, 7 U.S.C. 1622(g).

■ 2. In § 27.94, paragraph (a) is revised to read as follows:

**§ 27.94 Spot markets for contract settlement purposes.**

* * * * *

(a) For cotton delivered in settlement of any Cotton No. 2 or World Cotton contract on the Intercontinental Exchange (ICE); the spot markets are Southeastern, North and South Delta, Eastern Texas and Oklahoma, West Texas, and Desert Southwest.

* * * * *

Dated: October 19, 2015.

**Rex A. Barnes,**

*Associate Administrator, Agricultural Marketing Service.*

[FR Doc. 2015–26953 Filed 10–21–15; 8:45 am]

**BILLING CODE 3410–02–P**

## DEPARTMENT OF AGRICULTURE

### Farm Service Agency

### 7 CFR Part 789

**RIN 0560–AH68**

## Agriculture Priorities and Allocations System

**AGENCY:** Farm Service Agency, USDA.

**ACTION:** Final rule.

**SUMMARY:** The Farm Service Agency (FSA) is establishing the regulation for the Agriculture Priorities and Allocations System (APAS). Food is a critical commodity essential to the national defense (including civil emergency preparedness and response). To avoid civilian hardship during national defense emergencies, it may be necessary to regulate the production, processing, storage, and wholesale distribution of food. Through the APAS rule, the U.S. Department of Agriculture (USDA) will respond to requests to place priority ratings on contracts or orders (establishing priority on which contracts or orders are filled first) for agriculture commodities up through the wholesale levels, including agriculture production equipment, and allocate resources, as specified in the Defense Production Act (DPA) of 1950, as amended, if the necessity arises. FSA is implementing this rule as a way to redirect the agriculture commodities and resources to areas of hardship or potential hardship due to national emergencies. In most cases, there is likely to be no economic impact in filling priority orders because it would generally just be changing the timing in which orders are completed.

**DATES:** Effective December 21, 2015.

**FOR FURTHER INFORMATION CONTACT:** Robert Haughton, telephone (202) 702–0135. Persons with disabilities who require alternative means for communication (Braille, large print, audiotape, etc.) should contact the USDA Target Center at (202) 720–2600 (voice and TDD).

**SUPPLEMENTARY INFORMATION:**

**Executive Summary**

APAS is a USDA program that supports not only national defense needs (such as food for combat rations), but also emergency preparedness initiatives by addressing essential civilian needs (food and food resources) through the placing of priorities on contracts for items and services or allocating resources, as necessary. Although a specific Presidential disaster designation is not required, the ability to prioritize or allocate items or services can be triggered by a determination by the President or designated entities that this action is necessary or appropriate to promote national defense including the imminent need for emergency preparedness. Under DPA (50 U.S.C. App. 2061 to 2170, 2171, and 2172), the term ''national defense'' includes emergency preparedness, response, and critical infrastructure protection and restoration. Authority for priorities and allocations is specified in DPA and further defined in Executive Order 13603, ''National Defense Resources Preparedness,'' dated March 16, 2012. Executive Order 13603 replaced Executive Order 12919 (referenced in the proposed rule) and further defined jurisdictional areas and national defense preparedness roles and responsibilities for specific Departments. Executive Order 13603 did not change the intent of DPA as it applies to USDA's functions in national defense, including emergency preparedness; instead it gave additional jurisdiction to USDA for livestock, veterinary, and plant health resources.

For the final rule, only those sections in the ''Supplementary Information'' part of the proposed rule preamble that required modifications due to Executive Order 13603 or for other reasons are further discussed in the ''Supplementary Information'' section of this final rule. A more thorough explanation along with examples of APAS applicability was provided in the proposed rule that was published on May 19, 2011 (76 FR 29084–29106). References in those examples to Executive Order 12919 should be read to mean Executive Order 13603. Also contained in this summary are descriptions of comments received and responses developed on the proposed rule. We are not reiterating the ''Section by Section Discussion of Rule'' section of the proposed rule preamble in this document. Any changes to those sections are discussed in this document.

**Jurisdiction**

Title I of DPA and Executive Order 13603 authorize jurisdictional areas for each Department that is involved in national defense including emergency preparedness. USDA has jurisdiction for items that fall under the categories of:

(1) Food resources (including potable water packaged in commercially marketable containers) and food resource facilities;

(2) Livestock resources, veterinary resources, and plant health resources; and

(3) Domestic distribution of farm equipment and commercial fertilizer.

USDA cannot use its DPA authority for items or services not in its

jurisdiction. Those persons [1] in need of items or services that do not fall under the jurisdiction of USDA will request priorities or allocations assistance from the applicable resource agency.[2] USDA will direct the requesters to the appropriate resource agency if the request comes to USDA.

USDA intends to work with other resource agencies to address instances where USDA does not have jurisdiction for all of the items necessary to complete the order. For example, if an order for the delivery of milk needs to be prioritized, USDA would have jurisdiction over the milk as a food resource, but it would not have jurisdiction over the truck or fuel for the vehicle. Therefore, USDA intends to work with the other resource agencies to receive delegations to prioritize contracts or orders for other items or services necessary for use in support of programs approved for use by USDA (see next section). Until such delegations are received, USDA will follow the procedure described in the previous paragraph.

USDA also plans to provide delegations to other resource agencies to ensure they can respond timely to emergency events.

**APAS Programs Approved for Use by USDA**

USDA has three approved programs for priorities and allocations support under section 202 of Executive Order 13603. Items or services for which USDA may provide priorities or allocations support must fall under one of the following programs:

(1) Food and food resources (civilian): Programs involving food and food resources processing and storage in support of emergency preparedness activities conducted pursuant to Title VI of the Robert T. Stafford Disaster Relief and Emergency Assistance Act (Stafford Act, 42 U.S.C. 5195–5197h).

(2) Agriculture and food critical infrastructure protection and restoration (civilian): Programs to protect or restore the agriculture and food system from terrorist attacks, major disasters, and other emergencies.

(3) Military food rations: Programs to provide the Department of Defense with food resources for combat rations.

For all other requests for items under USDA's jurisdiction that are not covered by these three programs, USDA will request concurrence from the Secretary of Homeland Security before placing a priority rating on the items.

**Scope**

APAS covers only those government and private entities that have national defense, or emergency preparedness, response, and recovery responsibilities. This small realm strictly limits the participants eligible to request assistance through APAS. Also, the vendors that supply agriculture related items (food, food resources) and in the quantity that is expected to be requested is inherently limited in scope. Only a limited number of vendors are able to produce or deliver the large quantities of items required for emergency preparedness activities that would fall under the authority of Title I of DPA. For example, for preparations in advance of Hurricane Ike hitting the Texas Coast in 2008, one Federal agency considered requesting 1 million meals-ready-to-eat. In this example, it is clear that there would be limited companies that would be able to quickly supply 1 million meals-ready-to-eat. This is a representative example of the type of needs for which a priority rating would be requested through APAS. As a result, this program has a very limited customer base of large manufacturers and suppliers as well as those Government and public agencies (for example, the Red Cross), having national defense, or emergency preparedness, response, and recovery responsibilities.

Government organizations may request priority ratings through APAS to ensure that they are able to obtain critical resources during or in anticipation of an emergency to lessen the effects of the hazard on civilian populations.

As an example of how the Department of Commerce (DOC) has needed to use its Defense Priorities and Allocations System (DPAS) (15 CFR part 700), during the aftermath of Hurricane Katrina, after the request was endorsed by the Federal Emergency Management Agency (FEMA), DOC authorized a railroad to place a priority rated order with Company X for equipment to repair the damages to the railroad system supporting commodity movements in and around the New Orleans area. This rated order allowed the vendor responsible for repairing the railroad infrastructure around the New Orleans area to complete repairs in the fastest time possible. This allowed the response organizations to quickly receive items in bulk quantities needed to support the mass care and housing of those displaced by the hurricane and its aftermath. When the railroad placed the rated order for equipment, Company X was required to fill the railroad's order first, before any other orders, unless Company X had a legal basis for rejecting the rated order. In addition, all customers currently under contract obligations from Company X would not have breach-of-contract cause of action against Company X if their orders could not be filled by the original agreed-to time due to unplanned delays due to filling the rated order.

**DPA Priorities and Allocations Authority**

Section 101 of DPA (50 U.S.C. App. 2071) establishes the broad authority for the President to require the acceptance and priority performance of contracts or orders (other than contracts of employment) to support or promote the national defense over performance of any other contracts or orders, and to allocate materials, services, and facilities as deemed necessary or appropriate to promote the national defense. This is commonly referred to as ''priorities and allocations'' authority. Through Executive Order 13603 the President delegated the DPA section 101 priorities and allocations authority to the following agency heads:

- The Secretary of Agriculture with respect to food resources (including potable water packaged in commercially marketable containers), food resource facilities, livestock resources, veterinary resources, plant health resources, and the domestic distribution of farm equipment and commercial fertilizer.
- The Secretary of Energy with respect to all forms of energy.
- The Secretary of Health and Human Services with respect to health resources.
- The Secretary of Transportation with respect to all forms of civil transportation.
- The Secretary of Defense with respect to water resources.
- The Secretary of Commerce with respect to all other materials, services, and facilities, including construction materials.

Since the initial enactment, Congress has continued to reauthorize DPA. On September 30, 2009, Congress enacted the Defense Production Act Reauthorization (DPAR) of 2009 (Pub. L.111–67). A significant difference in that reauthorization was the requirement for Departments other than DOC to initiate rulemaking to implement their responsibilities under DPA. Specifically, section 101(d) of DPA (50 U.S.C. App. 2071(d)), as added by DPAR, directed the head of each Federal agency to issue final rules that establish standards and procedures to use the authority of section 101 to promote the national defense under both emergency and nonemergency

[1] The term ''person'' as used here refers to the requester of the priority rating. A person includes an individual, corporation, partnership, association, or any other organized group of persons, or legal successor or representative thereof, or any State or local government or agency thereof, or any Federal agency.

[2] The term ''resource agency'' as used here refers to any Federal agency that is delegated priorities and allocations authority as specified in § 789.2 of this final rule.

conditions and, as appropriate and to the extent necessary, consult with the heads of other Federal agencies to develop a consistent and unified Federal Priorities and Allocations System (FPAS).

DPA was extended again through September 30, 2019, by Pub. L. 113–172 (Sept. 26, 2014). In the most recent reauthorization, Congress retained the requirement in section 101(d) (50 U.S.C. App. 2071(d)) to issue final rules but also added a requirement to annually review and update those regulations whenever appropriate.

FEMA in the Department of Homeland Security (DHS) is responsible for coordinating priorities and allocations rulemaking efforts among the six Federal agencies that have been delegated DPA section 101 authority (referred to as ''resource agencies'') to ensure consistency and uniformity of rule language and provisions across resource agency jurisdictions. Together, the priorities and allocations system regulations of each resource agency will constitute FPAS.

USDA is working with FEMA and the other Departments that have DPA authority to have common rules for the implementation of priorities and allocations. Those Departments are in various stages of developing and publishing their own rules covering the jurisdictional areas outlined in Executive Order 13603. DOC published a final rule revising its DPAS regulation on August 14, 2014 (79 FR 47560). The Department of Energy published the rule for the Energy Priorities and Allocations System on June 9, 2011 (76 FR 33615); the Department of Transportation published the rule for the Transportation Priorities and Allocations System on October 1, 2012 (77 FR 59793); and the Department of Health and Human Services published the rule for the Health Resources Priority and Allocations System on July 17, 2015 (80 FR 42408–42423).

Within USDA, authority to administer APAS has been delegated to the FSA Administrator. FSA will manage APAS for all USDA.

This rule establishes APAS, one-part of the FPAS, to implement USDA's administration of its delegated authority under DPA section 101 and other related statutes such as the priorities provisions of the Military Selective Service Act [3] (50 U.S.C. App. 468) (see Executive Order 12742, ''National Security Industrial Responsiveness,'' dated Jan. 8, 1991). APAS is consistent with the existing DPAS regulation (15 CFR part 700) implemented by DOC to provide continuity with long-established priorities system procedures and to make use of a proven foundation for a consistent and unified FPAS, as appropriate and to the extent practicable.[4]

**APAS Description**

APAS provides guidance and procedures for use of DPA priorities and allocations authority with respect to the resource areas delegated by the President to the Secretary of Agriculture as specified in Executive Order 13603: Food resources; food resource facilities; livestock, veterinary, and plant health resources; and the domestic distribution of farm equipment and commercial fertilizer. As specified in Executive Order 13603, section 202, priorities and allocations may be used only to support programs that have been determined in writing ''as necessary or appropriate to promote the national defense'' by:

(a) The Secretary of Defense with respect to military production and construction, military assistance to foreign nations, military use of civil transportation, stockpiles managed by the Department of Defense, space, and directly related activities;

(b) The Secretary of Energy with respect to energy production and construction, distribution and use, and directly related activities; or

(c) The Secretary of Homeland Security, with respect to all other national defense programs, including civil defense and continuity of Government.

Under DPA, the term ''national defense'' specifically includes emergency preparedness activities conducted pursuant to title VI of the Stafford Act.[5] The Stafford Act, in section 602(b) of title VI, also cross-references DPA by stating that ''[t]he terms 'national defense' and 'defense', as used in [DPA], includes [sic] emergency preparedness activities conducted pursuant to this title.'' (See 42 U.S.C. 5195a(b).) Emergency preparedness activities include a broad range of measures to be taken in preparation for, during, and in response to natural disasters or accidental or man-caused events (that is, hazards).[6] Priority ratings are expected to be used most for:

(1) Preparedness, including actions taken before an event occurs to lessen the severity of hardships to civilians,

(2) Response, including actions taken immediately after the event happens, but before any recovery actions are taken, to relieve the effects on civilians; response includes both the anticipation of the event and the immediate response to it; and

(3) Recovery, including actions taken to restore critical infrastructure and key resources to normal operations.

USDA expects the requests for priority ratings will predominately be from Federal government agencies, and the State and local governments with a responsibility in emergency preparedness. USDA expects that a request from a private entity will be for the purpose of fulfilling a government contract; however, USDA will act on other requests that are appropriate for the regulation.

According to Executive Order 13603 the priorities and allocations authority of DPA may be used by the Secretary of Agriculture only to support programs that have been determined in writing as necessary or appropriate to promote the national defense. USDA has coordinated with the Secretary of Homeland Security and the Secretary of Defense to identify and approve programs that will cover everything for which we expect to need to provide priorities and allocations as covered in this regulation.

USDA has two programs that have been approved by the Secretary of Homeland Security for priorities and allocations support pursuant to the authority of the Secretary of Homeland Security as currently reflected in section 202(c) of Executive Order 13603:

(1) Food and food resources (civilian): Programs involving food and food resources processing and storage in support of emergency preparedness activities conducted pursuant to Title VI of the Stafford Act. Such programs involve activities and measures designed or undertaken to prepare for or minimize the effects of a hazard upon the civilian population, to handle immediate emergency conditions that would be created by the hazard, and to

[3] References to the Military Selective Service Act apply to those required deliveries to the Government exclusively for the use of the armed forces or for the use of the Atomic Energy Commission.

[4] DPAS regulations provided the starting point for development of the common rule language discussed above.

[5] The term ''national defense'' is defined in section 702(14) of DPA as ''programs for military and energy production or construction, military or critical infrastructure assistance to any foreign nation, homeland security, stockpiling, space, and any directly related activity. Such term includes emergency preparedness activities conducted pursuant to title VI of the [Stafford Act] and critical infrastructure protection and restoration.'' See 50 U.S.C. App. 2152(14).

[6] The term ''emergency preparedness'' is defined in section 602(a) of the Stafford Act as ''all those activities and measures designed or undertaken to prepare for or minimize the effects of a hazard upon the civilian population, to deal with the immediate emergency conditions which would be created by the hazard, and to effectuate emergency repairs to, or the emergency restoration of, vital utilities and facilities destroyed or damaged by the hazard.'' (See 42 U.S.C. 5195a(a).) Section 602(a) also provides a non-exhaustive list of specific measures that constitute emergency preparedness.

make emergency repairs to, or the emergency restoration of, vital utilities and food resource facilities destroyed or damaged by the hazard.

(2) Agricultural and food critical infrastructure protection and restoration: Programs to protect or restore the agriculture and food system from terrorist attacks, major disasters, and other emergencies. In Homeland Security Presidential Directive HSPD–9, ''Defense of United States Agriculture and Food,'' dated January 30, 2004, such programs involve activities and measures to:

- Identify and prioritize critical infrastructure and key resources in the agriculture and food system for establishing protection requirements;
- Develop awareness and early warning capabilities to recognize threats;
- Mitigate vulnerabilities at critical production and processing nodes;
- Enhance screening procedures for domestic and imported products; and
- Enhance response and recovery procedures.

These programs support the national defense by providing for essential civilian needs to ensure a viable food and agriculture sector during an emergency preparedness event or a military conflict. Both programs involve emergency preparedness activities and the maintenance and restoration of the critical infrastructure and key resources.

USDA has one program, Food Resources (combat rations), that has been approved by the Secretary of Defense for priorities and allocations support pursuant to the authority of the Secretary of Defense as currently reflected in section 202(a) of Executive Order 13603. USDA delegated implementation authority of the agricultural portion of DPA to DOC. DOC in turn delegated authority to the Department of Defense to administer a ''priorities'' program for combat rations to meet troop requirements (an agreement between DOC and USDA, dated January 28, 1991, and approved by FEMA on February 1, 1991). USDA is rescinding the delegation of authority with DOC and delegating authority directly to the Department of Defense to administer the combat rations programs.

The approved programs are listed in Schedule I of the APAS regulation (see Schedule I at the end of this document for a complete list of approved programs).

Before USDA can exercise its priorities or allocations authority for any requirements not covered under the approved programs, as specified in section 202 of Executive Order 13603, the Secretaries of Defense, Energy, or Homeland Security, as appropriate, would have to concur, in writing, with USDA that use of priorities or allocations authority by USDA would be necessary or appropriate to promote the national defense.

Commodities covered under the APAS regulation include those items required for production of agriculture commodities (including fertilizer, agriculture seed, and livestock feed), raw and processed agriculture products for wholesale distribution, and agriculture production equipment.

**Priorities and Allocations**

APAS has two principal components: Priorities and allocations.

**Priorities**

In the ''priorities'' component of APAS, certain contracts between the government and private parties, or contracts between private parties, would be required to be given priority (priority rating) over other respective contracts to ensure timely delivery of an item needed for an ''approved program.'' ''Approved program'' is defined in 7 CFR 789.8 as a program determined by the Secretary of Defense, the Secretary of Energy, or the Secretary of Homeland Security to be necessary or appropriate to promote the national defense, as specified in section 202 of Executive Order 13603. As stated above, certain USDA programs have been approved by the Secretary of Homeland Security and by the Secretary of Defense as necessary or appropriate to promote the national defense. Other programs could be approved in the future.

**Use of Priority Ratings**

If you (as a vendor) receive a rated order, you must give it preferential treatment as required by subpart C, §§ 789.10 through 789.18 (see the proposed rule for the section by section discussion of the regulation). This means that you must accept and fill rated orders for items that you normally supply and consistent with regularly established terms of sale (see § 789.13(a)). Failure to comply with the provisions of the rated order may result in legal actions and fines against the recipient of the rated order. However, certain grounds for mandatory rejection or optional rejection of the rated order may apply (see § 789.13(b) and (c)). Rated orders must be accepted or rejected within specified time frames (see §§ 789.13(d) and 789.13(e)).

All rated orders must be scheduled in a manner and to the extent possible to ensure timely delivery by the required delivery date contained in each order (see § 789.14(a)).

The existence of previously accepted unrated orders or contracts or lower rated orders is not sufficient reason for rejecting a rated order. In fact, you (as a supplier or vendor) are required to displace or defer lower rated or unrated orders if they conflict with your performance against a higher rated order (see § 789.14(b)). When you receive multiple rated orders for specific goods or services and the orders have the same rating level and scheduled date, you must give precedence to the conflicting order in the sequence in which they are to be delivered or performed (not to the receipt dates). If the conflicting orders are scheduled to be delivered or performed on the same day, the person must give precedence to those orders that have the earliest receipt dates (see § 789.14(c)).

To ensure that contracts and orders for authorized programs are completed in a timely fashion, you (as a supplier or vendor) must place, as necessary, a priority rating on all the contracts and orders you issue with suppliers for items needed to fill rated orders you have received (see § 789.15). This requirement ensures that priority treatment will be afforded your orders by your suppliers and from vendor to vendor throughout the supply chain. Other requirements apply to changes or cancellations of priority ratings and rated orders (see § 789.16) and use of rated orders for certain items (see § 789.17).

You may place a priority rating on your contracts or orders only if you are in receipt of a rated order or if you have been otherwise explicitly authorized to do so by USDA or a delegate agency (see § 789.18 for other limitations on placing rated orders).

**Allocations**

An ''allocation'' is defined in § 789.8 as the control of the distribution of materials, services, or facilities for a purpose deemed necessary or appropriate to promote the national defense. As specified in the allocations component of the APAS regulation (see subpart E, §§ 789.30 through 789.37), USDA has the authority to allocate specified items to promote the national defense.

Allocations authority would be used only when there is insufficient supply of a material, service, or facility to satisfy national defense supply requirements through the use of priorities authority or when the use of the priorities authority would cause a severe and prolonged disruption in the supply of materials, services, or facilities available to support normal U.S. economic activities (see

§ 789.30(a)). Under no circumstances would allocations be used to ration materials or services at the retail level (see § 789.30(a)). Allocations orders would be distributed equitably among the suppliers of the resource(s) being allocated and would not require any person to relinquish a disproportionate share of the civilian market (see § 789.30(b)).

Additionally, as specified in DPA section 101(b) and section 201(e) of Executive Order 13603, USDA may not use an allocation to control the general distribution of a material in the civilian market unless:

- The Secretary has made a written finding that such material is a scarce and critical material essential to the national defense and the requirements of the national defense for such material cannot otherwise be met without a significant dislocation of the normal distribution of such material in the civilian market to such a degree as to create appreciable hardship;
- The Secretary has submitted the finding for the President's approval through the Assistant to the President and National Security Advisor and the Assistant to the President for Homeland Security and Counterterrorism; and
- The President has approved the finding (see § 789.33).

DOC has extensive experience using its priorities authority (under its DPAS regulation), but has not used its allocations authority in more than 50 years. Much like DPAS, APAS is expected to primarily be used for prioritizing contracts and to a much lesser extent for making allocations. However, USDA is including allocations in the regulation to have the option ready, if needed. The allocations standards and procedures provide strong assurance that allocations would only be used in situations where the circumstances justify such orders.

For example, in a situation where dairy operations are brought to a standstill due to a detected presence of Foot and Mouth disease. The output of milk produced in the United States is curtailed by 80 percent as a result of reduced herd numbers in response to the outbreak. Prices for processed and unprocessed milk would skyrocket. In such an example, when USDA determines that allocating milk commodities to processors or wholesalers is necessary to promote the national defense, namely, as an emergency response action under Title VI of the Stafford Act (which is an approved program by the Secretary of Homeland Security under section 202(c) of Executive Order 13603). Because allocating this commodity would involve controlling its general distribution in the market, USDA then makes the required finding as specified in DPA section 101(b) for allocating this food commodity and forwards that finding to the President through the National Security Advisor. After Presidential concurrence with the determination, per Executive Order 13603, USDA may allocate this commodity on a pre-determined basis to processors or wholesalers. The purpose of this allocation would be to control the distribution of milk to ensure civilian hardships are minimized. USDA would allocate existing and new milk sources to redistribute milk products in a way that ensures previously established priorities for this food product (for example, school food programs and nutritional programs for mothers and infant children to continue to provide some level of resources for those already enrolled in such programs) are met and would continue implementing allocation policies until USDA determines that this food source shortfall no longer meets the requirements for allocation programs.

**Proposed Rule Comments**

FSA's proposed rule had a 60-day comment period that ended on July 18, 2011. This final rule addresses the comments received on the proposed rule; and makes minor revisions to address the public comments and the recently published Executive Order 13603. As explained above, Executive Order 13603 added new categories to USDA's jurisdiction. These additional categories did not require substantive changes to the regulation; therefore, additional comments are not being requested.

FSA received two comments; one comment was from a pet food association and the other comment was submitted jointly by a grain and feed association (representing all sectors of the grain and feed industry—not limited to food) and a trade association. The comments raised the same set of concerns about APAS, including concerns on how APAS will be initiated or triggered, and how APAS will affect the agricultural sectors in potential cases of market disturbances or disruptions. The following summarizes each issue raised by the commenters and FSA's response to each issue.

Comment: Improper use of APAS authority poses a risk of undermining the United States' hard-fought reputation as a reliable supplier of agricultural products to domestic and foreign markets.

Response: APAS authority is granted to USDA by DPA and Executive Order 13603. APAS provides the ability to expedite the provision of agricultural resources to areas affected by a disaster, and is only authorized for times when the normal market channels cannot provide the resources to the disaster areas in a timely manner. If normal market channels are capable of providing the resources, APAS will not be used to expedite delivery of the resources. Further, with respect to allocations, FSA expects that the allocations section of this regulation would be used only in worst case scenarios, relying first on priorities authority to respond to emergency conditions. This is evident by the fact that DOC has the same allocations authority under DPA and has not used the allocations authority in over 50 years. Additionally, even if allocations orders were issued, the regulation has strict parameters in place. As stated in § 789.30(b), allocation orders, when used, will be distributed equitably among the suppliers of the materials, services, or facilities being allocated and not require any person to relinquish a disproportionate share of the civilian market. As a result, FSA expects that if APAS were used in the event of an emergency, domestic and foreign markets would not be adversely affected, including the United States' ability to readily supply agricultural products to domestic and foreign markets. Therefore, no change was made to the regulation in response to this comment.

Comment: USDA should fully investigate whether it has sufficient existing authority under the Commodity Credit Corporation (CCC) Charter Act or other laws to execute orders to prioritize and reallocate the distribution of food resources.

Response: The CCC Charter Act (15 U.S.C. 714–714p) was established with the intent to stabilize commodity market prices for agricultural producers during volatile economic periods through price support and disaster programs. The intent of the CCC Charter Act was never to provide immediate food and food resource assistance to a civilian population that has been impacted by a disaster. As a result, the CCC has no jurisdiction in this area of national defense and emergency preparedness. Therefore, no change was made to the regulation in response to this comment.

Comment: Craft language in the regulation itself specifying the triggering events(s) under which USDA would activate APAS, and more clearly define the 'national defense' aspects of APAS, differentiating those from a limited regional or local natural disaster for which the ability to respond effectively already exists.

Response: The term ''national defense'' is defined in DPA. In implementing DPA, Executive Order 13603 also uses that definition. The Federal Departments that collaborated on developing a priorities and allocations common regulation use the definition found in Executive Order 13603 in their respective regulation. FEMA and other Federal agencies responsible for emergency response and recovery by law cannot enter a disaster impacted zone unless specific protocols have been met. The protocols are to ensure that first response is the responsibility of State, local, and Tribal authorities, and only when those State, local, and Tribal authorities are overwhelmed and national security is at risk, then the Federal agencies begin to play a role. If the disaster or event is of such a magnitude that the State, local, and Tribal authorities cannot meet the needs of the public, then APAS could be used by Federal Departments with response functions to request priority ratings to support the efforts of first responders in national defense (including emergency preparedness) initiatives. Under DPA and Executive Order 13603, Federal Departments do not need a Stafford Act declaration to use their priorities and allocations authorities. Therefore, no change was made to the regulation in response to this comment.

Comment: The proposed regulation, if finalized, should vest in the President the sole power to activate the use of APAS's priority-ranking and allocations-order authority. Further, the Secretary of Agriculture should have sole power to authorize the actual issuance of any order under APAS.

Response: Executive Order 13603 delegates the President's priorities and allocations authorities under DPA to the heads of specific Federal agencies. This includes the authority to require acceptance and priority performance of contracts or orders to promote the national defense over performance of any other contracts or orders, as well as authority to allocate materials, services, and facilities as deemed necessary or appropriate to promote the national defense. Subject to the Executive Order's limitation that the priorities and allocations authority be used only to support programs that have been determined in writing (by the Secretaries of Defense, Energy, or Homeland Security, depending on the activity) as necessary or appropriate to promote the national defense, the agency heads have broad discretion in determining the circumstances in which the priorities or allocations authority will be used. The President has delegated these authorities to the Secretary of Agriculture in Executive Order 13603 with respect to certain resource areas (and previously in Executive Order 12919). The Secretary of Agriculture has re-delegated DPA authority to the FSA Administrator through the Under Secretary for Farm and Foreign Agricultural Services (see 7 CFR 2.16(a)(6); 2.42(a)(5)). Therefore, no change was made to the regulation in response to this comment; however, minor changes were made in this rule as a result of the release of Executive Order 13603 to include a revised definition of ''food resources.''

Comment: The proposed rule dismisses and fails to accurately assess the economic cost of APAS to the agriculture industry and other sectors, including transporters, if USDA uses its authority to issue orders that circumvent existing commercial and governmental contracts.

Response: As noted above, there is a limited group of participants eligible for participation in the APAS program; therefore, there were limited data available to analyze the economic costs. DOC's use of DPAS, which has been used for similar priority ratings using its delegation of authority from the Secretary of Agriculture, has not resulted in known economic hardships to participants involved in the agricultural industry and other sectors. USDA and other Federal agencies will not use APAS to circumvent existing commercial and government contracts. Instead, they will use APAS to speed up delivery of items under contract or increase amounts procured under contract. Therefore, no change was made to the regulation in response to this comment.

Comment: As proposed, APAS requires that parties accept or reject priority orders received in response to emergency preparedness conditions within 6 to 12 hours, as opposed to the 15 days generally provided under the DPAS. Such a requirement may be unreasonably short to make such a management-level decision.

Response: The requirement for acceptance or rejection of a rated order for certain emergency preparedness conditions within 6 hours (where the order is issued in response to a hazard that has occurred) or the greater of 12 hours or the time specified in the order (where the order is issued to prepare for an imminent hazard) was based on the principle that food and drinking water are critical elements to sustain human life and any delays after this timeframe can cause life-threatening hardships. The 15 days requirement for DO-rated orders pertains to other conditions, when time is not as critical to provide food resources to the population. If a vendor cannot meet the requirement of the 6 to 12 hours to accept a rated order, it must reject the order on the basis that it cannot meet the required timeframe. Vendors should not accept rated orders if they are unsure of their capacity to fill the order. Therefore, no change was made to the regulation in response to this comment.

Comment: The FSA Administrator should not be authorized to reject a request for an informal hearing to appeal a rated order, particularly since the agency would continue to require that contract performance under the order not be stayed pending the outcome of the appeal.

Response: Due to the nature of this regulation and the potential life and death situations that warrant use of priority ratings, we cannot grant every request for an informal hearing during an appeal. The FSA Administrator will address each request on a case by case basis. Therefore, no change was made to the regulation in response to this comment.

Comment: If USDA proceeds to finalize an APAS rule, it needs to reexamine and improve upon the proposed language currently found in § 789.70, which provides legal protection to private-sector companies that find it necessary to cancel or delay their performance on other commercial contracts so they can fulfill any APAS-related orders prioritized by USDA.

Response: The text of 7 CFR 789.70 restates the liability protection provisions of DPA (50 U.S.C. app. 2157). USDA believes that the DPA liability protection from damages or penalties for actions resulting directly or indirectly from compliance with APAS extends to legal actions brought by private parties and covers not only the vendor(s) receiving a rated order or subject to an allocations order, but also to other vendors whose contracts are affected as a result of the other vendor's compliance with the rated order or allocation. Therefore, no change was made to the regulation in response to this comment.

**Other Rule Changes**

As explained above, the jurisdiction delegated by the President to the Secretary of Agriculture as specified in Executive Order 13603 was expanded to include livestock, veterinary, and plant health resources, in addition to the previous delegations for food resources, food resource facilities, and the domestic distribution of farm equipment and commercial fertilizer. Therefore, nondiscretionary changes were made

throughout the regulation to include livestock, veterinary, and plant health resources in the following places:

- § 789.1, ''Purpose;''
- Section 789.2, ''Priorities and Allocations Authority,'' which summarizes the delegations of priorities and allocations authority; and
- Section 789.8, ''Definitions.''

USDA's Animal and Plant Health Inspection Service developed the definitions that were added for the new jurisdiction for livestock, veterinary, and plant health resources. These new definitions are:

- ''Animal'' means any member of the animal kingdom (except a human).[7]
- ''Livestock'' means all farm-raised animals.[8]
- ''Livestock resources'' means materials, facilities, vehicles, health supplies, services, and equipment required for the production and distribution of livestock.
- ''Plant health resources'' means biological products, materials, facilities, vehicles, supplies, services, and equipment required to prevent the impairment of, improve, or restore plant health conditions.
- ''Veterinary resources'' means drugs, biological products, medical devices, materials, facilities, vehicles, health supplies, services, and equipment required to diagnose, mitigate or prevent the impairment of, improve, treat, cure, or restore the health conditions of the animal population.

Executive Order 13603 modifies the following definitions: ''Civil transportation,'' ''energy,'' ''food resources,'' ''food resource facilities,'' ''health resources,'' and ''water resources.'' The most significant changes are in the definitions of ''food resources'' and ''water resources,'' which establish that the jurisdiction for potable water packaged in commercially marketable containers belongs to the Secretary of Agriculture. All other modifications clarify existing definitions.

In addition, several non-substantive changes were made for consistency with the related regulations being implemented by other agencies. For example, minor edits were made to this rule to parallel edits made to the final DPA rule published by the Department of Transportation on October 1, 2012 (77 FR 59793–59818). The nature of all of these changes was minor clarifying changes, for example:

- Updated the Executive Order number from 12919 to 13603 and updated the citation,
- Updated the references to the authorizing jurisdictions throughout for consistency with the changes made by Executive Order 13603,
- Revised the definitions for ''civil transportation,'' ''energy,'' ''food resources,'' ''food resource facilities,'' ''health resources,'' and ''water resources'' for consistency with Executive Order 13603,
- Removed, to avoid confusion, the reference to the Federal Priorities and Allocations System because it is only the concept of the combination of all of the priorities and allocations rules being implemented by each of the agencies required to implement DPA,
- Added a citation to the DOC regulation, and
- Updated titles for clearances required for the President's approval, and
- Corrected minor typographical errors.

**Executive Order 12866**

The Office of Management and Budget (OMB) designated this rule as significant under Executive Order 12866, ''Regulatory Planning and Review,'' and has reviewed this rule. A summary of the cost benefit analysis is provided below; the cost benefit analysis is available at *www.regulations.gov* with the supporting materials for this rule.

**Summary of Cost Benefit Analysis**

DPA requires the head of each Federal agency to which the President delegates authority to prioritize contracts and orders to meet the needs of national defense. In Executive Order 13603 the President delegated DPA authority with respect to food resources; food resource facilities; livestock, veterinary, and plant health resources; and the domestic distribution of farm equipment and commercial fertilizer to the Secretary of Agriculture. To implement DPA, FSA is implementing the APAS regulation, which is modeled after DPAS.

Food is essential to national defense including civil emergency response. APAS is designed to use the DPA authority to help ensure that food is available when and where it is needed most, such as after a hurricane or an earthquake. The authority under DPA extends beyond emergency conditions to also cover nonemergency conditions. Under DPA, USDA may develop plans and programs to expedite and expand the supply of critical resources from the private sector for the production, processing, storage, and distribution of agricultural commodities to promote national defense and to prevent civilian hardship in the food marketplace. In addition, DPA enables USDA to further support domestic emergency preparedness, response, and recovery activities, critical infrastructure protection and restoration, and homeland security activities.

The impact of APAS on private companies receiving priority orders is expected to vary depending on economic factors. In most cases, there is likely to be no economic impact in filling priority orders because it would generally just be changing the timing in which orders are completed. No data were provided by the commenters to change this analysis, anecdotally, the comments stated that ''manufacturing and distribution processes . . . would be altered by allocation orders . . . will have a negative economic impact.''

APAS is expected to primarily be used for prioritizing contracts and to a lesser extent for determining allocations. USDA does not expect any program outlays under APAS for prioritizing contracts and potentially determining allocations. USDA will likely incur administrative expenses associated with assessing priorities and allocations requests and providing oversight for approved requests. The administrative expenses are expected to be marginal as APAS will presumably be administered using existing USDA personnel.

APAS is expected to have an overall positive impact on the U.S. public and industry by maintaining and restoring the production, processing, storage, and distribution of agricultural commodities during times of both emergency and nonemergency conditions to promote national defense and to prevent civilian hardship in the food marketplace. While USDA has not yet administered APAS under DPA authority, the continued use of the Department of Commerce's DPAS by the Department of Defense proves the usefulness of a priorities and allocations system.

As discussed above, FSA received one comment about the analysis, as follows:

Comment: The proposed rule dismisses and fails to accurately assess the economic cost of APAS to the agriculture industry and other sectors, including transporters, if USDA uses its authority to issue orders that circumvent existing commercial and governmental contracts.

Response: As noted above, there are a limited group of participants eligible for participation in the APAS program; therefore, there were limited data available to analyze the economic costs. DOC's use of DPAS, which has been used for similar priority ratings using its delegation of authority from the Secretary of Agriculture, has not resulted in any known economic hardships to participants involved in the agricultural industry and other sectors. USDA and other Federal

[7] Definition of ''animal'' from the Animal Health Protection Act (Pub. L. 107–171, Title X, Subtitle E).

[8] Definition of ''livestock'' from the Animal Health Protection Act (Pub. L. 107–171, Title X, Subtitle E).

agencies will not use APAS to circumvent existing commercial and government contracts. Instead, they will use APAS to speed up delivery of items under contract or increase procurement of items under contract. Therefore, no change was made to the analysis in response to this comment.

**Regulatory Flexibility Act**

The Regulatory Flexibility Act (5 U.S.C. 601–612), as amended by the Small Business Regulatory Enforcement Fairness Act of 1996 (SBREFA), generally requires an agency to prepare a regulatory flexibility analysis of any rule subject to the notice and comment rulemaking requirements under the Administrative Procedure Act (5 U.S.C. 553) or any other statute, unless the agency certifies that the rule will not have a significant economic impact on a substantial number of small entities. FSA has determined that this rule will not have a significant impact on a substantial number of small entities for the reasons explained below. Consequently, FSA has not prepared a regulatory flexibility analysis.

Small entities include small businesses, small organizations, and small governmental jurisdictions. For purposes of assessing the impacts of this rule on small entities, a small business, as described in the Small Business Administration's Table of Small Business Size Standards Matched to North American Industry Classification System Codes (August 2008 Edition), has a maximum annual revenue of $33.5 million and a maximum of 1,500 employees (for some business categories, these numbers are lower). Due to the scope of this rule and for consistency with DPAS and other regulations implementing DPA, these general size standards were used for this analysis. The range of small business size standards varies. For example, SBA classifies a small business for Food Manufacturing as one that has a maximum annual revenue of $750,000 and for Crop or Animal Production a maximum of 500 employees. Due to the wide variety of businesses that could be involved in APAS, and that the potential impacts are expected to be minor, the more narrow categories were not used for this analysis. A small governmental jurisdiction is a government of a city, town, school district or special district with a population of less than 50,000. A small organization is any not-for-profit enterprise that is independently owned and operated and is not dominant in its field.

This rule establishes criteria under which USDA (or agencies to which USDA delegates authority) will authorize prioritization of certain orders or contracts as well as criteria under which USDA would issue orders allocating resources or production facilities. Because the rule affects commercial transactions, USDA believes that small organizations and small governmental jurisdictions are unlikely to be affected by this rule. However, FSA has no basis on which to estimate the number of small businesses that are likely to be affected by this rule.

FSA believes that any impact that this rule might have on small businesses would be minor. The rule has two principal components: Prioritization and allocation. Prioritization is the process that is, by far, more likely to be used. Under prioritization, USDA designates certain orders, which may be placed by Government or by private entities, and assigned under one of two possible priority levels. Once so designated, such orders are referred to as ''rated orders.'' The recipient of a rated order must give it priority over an unrated order. The recipient of a rated order with a higher priority rating must give that order priority over any rated orders with the lower priority rating and over unrated orders as necessary to meet the delivery requirements of each rated order. A recipient of a rated order may place more than one order at the same priority level with suppliers and subcontractors for supplies and services necessary to fulfill the recipient's rated order and the suppliers and subcontractors must treat the request from the rated order recipient as a rated order with the same priority level as the original rated order. The rule does not require recipients to fulfill rated orders if the price or terms of sale are not consistent with the price or terms of sale of similar non-rated orders. The rule provides a defense from any liability for damages or penalties for actions or inactions made in compliance with the rule.

Although rated orders could require a recipient to fill one order prior to filling another, they would not require a reduction in the total volume of orders nor would they require the recipient to reduce prices or provide rated orders with more favorable terms than a similar non-rated order. Under these circumstances, the economic effects on the rated order recipient of substituting one order for another are likely to be mutually offsetting, resulting in no net loss.

Allocations could be used to control the general distribution of materials or services in the civilian market. Specific allocations actions that FSA might take are set-asides, allocations directives, and allotments. Any allocations actions would be used only in extraordinary circumstances. As required by section 101(b) of DPA (50 U.S.C. App. 2071) and by section 201(e) of Executive Order 13603, allocations may be implemented only if the Secretary of Agriculture made, and the President approved, a finding: (1) That the material [or service] is a scarce and critical material [or service] essential to the national defense, and (2) that the requirements of the national defense for such material [or service] cannot otherwise be met without creating a significant dislocation of the normal distribution of such material [or service] in the civilian market to such a degree as to create appreciable hardship.

Any allocations actions would also have to comply with section 701(e) of DPA (50 U.S.C. app. sec. 2151(e)), which provides that small business be included. To the extent practicable, a fair share of the material, including services, will be provided to small business in proportion to the share received by such business concerns under normal conditions. Although FSA cannot determine precisely the number of small entities that would be affected by this rule, FSA believes that the overall impact on such entities would not be significant. In most instances, rated contracts would be in addition to other (unrated) contracts and would not reduce the total amount of business the firm receives. Because allocations can be imposed only after a determination by the President, and there have been no allocations actions under DPA authority in more than 50 years, allocations are expected to be a rare occurrence. Therefore, estimating the impact of an allocation, should one occur, is difficult. FSA believes that the requirement for a Presidential determination and the provisions of section 701 of the DPA provide reasonable assurance that any impact on small business will not be significant.

Therefore, for the reasons set forth above, FSA certifies that this action would not have a significant impact on a substantial number of small entities.

**Environmental Review**

The environmental impacts of this rule have been considered in a manner consistent with the provisions of the National Environmental Policy Act (NEPA, 42 U.S.C. 4321–4347), the regulations of the Council on Environmental Quality (40 CFR parts 1500 through 1508), and the FSA regulation for compliance with NEPA (7 CFR part 799). The provisions of this rule are specifically related to acquisition and are considered solely

administrative in nature. Therefore, FSA has determined that NEPA does not apply to this rule and no environmental assessment or environmental impact statement will be prepared.

**Executive Order 12372**

Executive Order 12372, ''Intergovernmental Review of Federal Programs,'' requires consultation with State and local officials. The objectives of the Executive Order are to foster an intergovernmental partnership and a strengthened Federalism, by relying on State and local processes for State and local government coordination and review of proposed Federal Financial assistance and direct Federal development. This rule does not provide Federal financial assistance, direct Federal development, grants, or cooperative agreements. Therefore, this program is not subject to Executive Order 12372.

**Executive Order 12988**

This rule has been reviewed under Executive Order 12988, ''Civil Justice Reform.'' This rule would not preempt State and or local laws, and regulations, or policies unless they present an irreconcilable conflict with this rule. Before any judicial action may be brought concerning the provisions of this rule, appeal provisions of 7 CFR parts 11 and 780 would need to be exhausted.

**Executive Order 13132**

This final rule has been reviewed under Executive Order 13132, ''Federalism.'' The policies contained in this rule do not have any substantial direct effect on States, the relationship between the Federal government and the States, or the distribution of power and responsibilities among the various levels of government. Nor does this rule impose substantial direct compliance costs on State and local governments. Therefore, consultation with the States is not required.

**Executive Order 13175**

This final rule has been reviewed for compliance with Executive Order 13175, ''Consultation and Coordination with Indian Tribal Governments.'' The policies contained in this rule do not have Tribal implications that preempt Tribal law. FSA continues to consult with Tribal officials to have a meaningful consultation and collaboration on the development and strengthening of FSA regulations.

**Unfunded Mandates**

Title II of the Unfunded Mandates Reform Act of 1995 (UMRA, Pub. L. 104–4) requires Federal agencies to assess the effects of their regulatory actions on State, local, or tribal governments or the private sector. Agencies generally must prepare a written statement, including a cost benefit analysis, for proposed and final rules with Federal mandates that may result in expenditures of $100 million or more in any 1 year for State, local, or tribal governments, in the aggregate, or to the private sector. UMRA generally requires agencies to consider alternatives and adopt the more cost effective or least burdensome alternative that achieves the objectives of the rule. This rule contains no Federal mandates as defined by Title II of UMRA for State, local, or tribal governments or for the private sector. Therefore, this rule is not subject to the requirements of sections 202 and 205 of UMRA.

**Paperwork Reduction Act**

In accordance with the Paperwork Reduction Act of 1995 (44 U.S.C. 3501–3520), FSA described the new information collection activities in the request for public comment in the proposed rule. No comments related to the Paperwork Reduction Act were received, and no change to the information collection was required. The currently approved information collection is covered under OMB control number 0560–0280.

**E-Government Act Compliance**

FSA is committed to complying with the E-Government Act, to promote the use of the Internet and other information technologies to provide increased opportunities for citizen access to Government information and services, and for other purposes.

**List of Subjects in 7 CFR Part 789**

Administrative practice and procedure, Business and industry, Government contracts, National defense, Reporting and recordkeeping requirements.

■ For the reasons discussed in the preamble, FSA adds 7 CFR part 789 to read as follows:

## PART 789—AGRICULTURE PRIORITIES AND ALLOCATIONS SYSTEM (APAS)


**Subpart A—General**

Sec.
789.1 Purpose.
789.2 Priorities and allocations authority.
789.3 Program eligibility.

**Subpart B—Definitions**

789.8 Definitions.

**Subpart C—Placement of Rated Orders**

789.10 Delegations of authority.
789.11 Priority ratings.
789.12 Elements of a rated order.
789.13 Acceptance and rejection of rated orders.
789.14 Preferential scheduling.
789.15 Extension of priority ratings.
789.16 Changes or cancellations of priority ratings and rated orders.
789.17 Use of rated orders.
789.18 Limitations on placing rated orders.

**Subpart D—Special Priorities Assistance**

789.20 General provisions.
789.21 Requests for priority rating authority.
789.22 Examples of assistance.
789.23 Criteria for assistance.
789.24 Instances where assistance must not be provided.

**Subpart E—Allocations Actions**

789.30 Policy.
789.31 General procedures.
789.32 Precedence over priority rated orders.
789.33 Controlling the general distribution of a material in the civilian market.
789.34 Types of allocations orders.
789.35 Elements of an allocations order.
789.36 Mandatory acceptance of allocations orders.
789.37 Changes or cancellations of allocations orders.

**Subpart F—Official Actions**

789.40 General provisions.
789.41 Rating authorizations.
789.42 Directives.
789.43 Letters of understanding.

**Subpart G—Compliance**

789.50 General provisions.
789.51 Audits and investigations.
789.52 Compulsory process.
789.53 Notification of failure to comply.
789.54 Violations, penalties, and remedies.
789.55 Compliance conflicts.

**Subpart H—Adjustments, Exceptions, and Appeals**

789.60 Adjustments or exceptions.
789.61 Appeals.

**Subpart I—Miscellaneous Provisions**

789.70 Protection against claims.
789.71 Records and reports.
789.72 Applicability of this part and official actions.
789.73 Communications.

Schedule I to Part 789—Approved Programs and Delegate Agencies


**Authority:** 50 U.S.C. App. 2061–2170, 2171, and 2172; 42 U.S.C. 5195–5197h.

### Subpart A—General

**§ 789.1 Purpose.**

This part provides guidance and procedures for use of the Defense Production Act priorities and allocations authority by the United States Department of Agriculture (USDA) with respect to food resources,

food resource facilities, livestock resources, veterinary resources, plant health resources, and the domestic distribution of farm equipment and commercial fertilizer in this part. (The guidance and procedures in this part are consistent with the guidance and procedures provided in other regulations issued under Executive Order 13603. Guidance and procedures for use of the Defense Production Act priorities and allocations authority with respect to other types of resources are as follows: For all forms of energy, refer to the Department of Energy's Energy Priorities and Allocations System (EPAS) regulation in 10 CFR part 217; for all forms of civil transportation, refer to the Department of Transportation's Transportation Priorities and Allocations System (TPAS) regulation in 49 CFR part 33; for water resources, refer to the Department of Defense; for health resources, refer to the Department of Health and Human Services' Health Resources Priorities and Allocations System in 45 CFR part 101; and for all other materials, services, and facilities, including construction materials, refer to the Department of Commerce's Defense Priorities and Allocations System (DPAS) regulation in 15 CFR part 700.)

**§ 789.2 Priorities and allocations authority.**

(a) Section 201 of Executive Order 13603 (3 CFR, 2012 Comp., p. 225) delegates the President's authority under section 101 of the Defense Production Act to require acceptance and priority performance of contracts and orders (other than contracts of employment) to promote the national defense over performance of any other contracts or orders, and to allocate materials, services, and facilities as deemed necessary or appropriate to promote the national defense to the following agencies. Essentially, this allows the following agencies to place priority on the performance of contracts for items and materials under their jurisdiction as required for national defense initiatives including emergency preparedness activities:

(1) The Secretary of Agriculture with respect to food resources, food resource facilities, livestock resources, veterinary resources, plant health resources, and the domestic distribution of farm equipment and commercial fertilizer;

(2) The Secretary of Energy with respect to all forms of energy;

(3) The Secretary of Health and Human Services with respect to health resources;

(4) The Secretary of Transportation with respect to all forms of civil transportation;

(5) The Secretary of Defense with respect to water resources; and

(6) The Secretary of Commerce with respect to all other materials, services, and facilities, including construction materials.

(b) Section 202 of Executive Order 13603 specifies that the priorities and allocations authority may be used only to support programs that have been determined in writing as necessary or appropriate to promote the national defense by:

(1) The Secretary of Defense with respect to military production and construction, military assistance to foreign nations, military use of civil transportation, stockpiles managed by the Department of Defense, space, and directly related activities;

(2) The Secretary of Energy with respect to energy production and construction, distribution and use, and directly related activities; or

(3) The Secretary of Homeland Security with respect to all other national defense programs, including civil defense and continuity of Government.

**§ 789.3 Program eligibility.**

Certain programs that promote the national defense are eligible for priorities and allocations support. These include programs for military and energy production or construction, military or critical infrastructure assistance to any foreign nation, homeland security, stockpiling, space, and any directly related activity. Other eligible programs include emergency preparedness activities conducted pursuant to Title VI of the Stafford Act and critical infrastructure protection and restoration.

## Subpart B—Definitions

**§ 789.8 Definitions.**

*Allocations* means the control of the distribution of materials, services, or facilities for a purpose deemed necessary or appropriate to promote the national defense.

*Allocations order* means an official action to control the distribution of materials, services, or facilities for a purpose deemed necessary or appropriate to promote the national defense.

*Allotment* means an official action that specifies the maximum quantity for a specific use of a material, service, or facility authorized to promote the national defense.

*Animal* means any member of the animal kingdom (except a human).

*APAS* means the Agriculture Priorities and Allocations System established by this part.

*Applicant* means the person applying for assistance under APAS. (See definition of ''person.'')

*Approved program* means a program determined by the Secretary of Defense, the Secretary of Energy, or the Secretary of Homeland Security to be necessary or appropriate to promote the national defense, as specified in section 202 of Executive Order 13603.

*Civil transportation* includes movement of persons and property by all modes of transportation in interstate, intrastate, or foreign commerce within the United States, its territories and possessions, and the District of Columbia, and related public storage and warehousing, ports, services, equipment and facilities, such as transportation carrier shop and repair facilities. ''Civil transportation'' also includes direction, control, and coordination of civil transportation capacity regardless of ownership. ''Civil transportation'' does not include transportation owned or controlled by the Department of Defense, use of petroleum and gas pipelines, and coal slurry pipelines used only to supply energy production facilities directly.

*Construction* means the erection, addition, extension, or alteration of any building, structure, or project, using materials or products that are to be an integral and permanent part of the building, structure, or project. Construction does not include maintenance and repair.

*Critical infrastructure* means any systems and assets, whether physical or cyber-based, so vital to the United States that the degradation or destruction of such systems and assets would have a debilitating impact on national security, including, but not limited to, national economic security and national public health or safety.

*Defense Production Act* means the Defense Production Act of 1950, as amended (50 U.S.C. App. 2061 to 2170, 2171, and 2172).

*Delegate agency* means a government agency authorized by delegation from USDA to place priority ratings on contracts or orders needed to support approved programs.

*Directive* means an official action that requires a person to take or refrain from taking certain actions in accordance with the provisions.

*Emergency preparedness* means all those activities and measures designed or undertaken to prepare for or minimize the effects of a hazard upon the civilian population, to deal with the immediate emergency conditions that would be created by the hazard, and to make emergency repairs to, or the emergency restoration of, vital utilities

and facilities destroyed or damaged by the hazard. Emergency preparedness includes the following:

(1) Measures to be undertaken in preparation for anticipated hazards (including the establishment of appropriate organizations, operational plans, and supporting agreements, the recruitment and training of personnel, the conduct of research, the procurement and stockpiling of necessary materials and supplies, the provision of suitable warning systems, the construction or preparation of shelters, shelter areas, and control centers, and, when appropriate, the non-military evacuation of the civilian population).

(2) Measures to be undertaken during a hazard (including the enforcement of passive defense regulations prescribed by duly established military or civil authorities, the evacuation of personnel to shelter areas, the control of traffic and panic, and the control and use of lighting and civil communications).

(3) Measures to be undertaken following a hazard (including activities for fire fighting, rescue, emergency medical, health and sanitation services, monitoring for specific dangers of special weapons, unexploded bomb reconnaissance, essential debris clearance, emergency welfare measures, and immediately essential emergency repair or restoration of damaged vital facilities).

*Energy* means all forms of energy including petroleum, gas (both natural and manufactured), electricity, solid fuels (including all forms of coal, coke, coal chemicals, coal liquefaction and coal gasification), solar, wind, other types of renewable energy, atomic energy, and the production, conservation, use, control, and distribution (including pipelines) of all of these forms of energy.

*Facilities* includes all types of buildings, structures, or other improvements to real property (but excluding farms, churches or other places of worship, and private dwelling houses), and services relating to the use of any such building, structure, or other improvement.

*Farm equipment* means equipment, machinery, and repair parts manufactured for use on farms in connection with the production or preparation for market use of food resources.

*Feed* is a nutritionally adequate manufactured food for animals (livestock and poultry raised for agriculture production); and by specific formula is compounded to be fed as the sole ration and is capable of maintaining life and promoting production without any additional substance being consumed except water.

*Fertilizer* means any product or combination of products that contain one or more of the elements—nitrogen, phosphorus, and potassium—for use as a plant nutrient.

*Food resources* means all commodities and products (simple, mixed, or compound), or complements to such commodities or products, that are capable of being ingested by either human beings or animals, irrespective of other uses to which such commodities or products may be put, at all stages of processing from the raw commodity to the products suitable for sale for human or animal consumption. Food resources also means potable water packaged in commercially marketable containers, all starches, sugars, vegetable and animal or marine fats and oils, seed, cotton, hemp, and flax fiber, but does not mean any such material after it loses its identity as an agricultural commodity or agricultural product.

*Food resource facilities* means plants, machinery, vehicles (including on-farm), and other facilities required for the production, processing, distribution, and storage (including cold storage) of food resources, and for the domestic distribution of farm equipment and fertilizer (excluding transportation for that distribution).

*Hazard* means an emergency or disaster resulting from a natural disaster; or from an accidental or man-caused event.

*Health resources* means drugs, biological products, medical devices, materials, facilities, health supplies, services, and equipment required to diagnose, mitigate, or prevent the impairment of, improve, treat, cure, or restore the physical or mental health conditions of the population.

*Homeland security* includes efforts:

(1) To prevent terrorist attacks within the United States;

(2) To reduce the vulnerability of the United States to terrorism;

(3) To minimize damage from a terrorist attack in the United States; and

(4) To recover from a terrorist attack in the United States.

*Industrial resources* means all materials, services, and facilities, including construction materials, but not including: Food resources, food resource facilities, livestock resources, veterinary resources, plant health resources, and the domestic distribution of farm equipment and commercial fertilizer; all forms of energy; health resources; all forms of civil transportation; and water resources.

*Item* means any raw, in process, or manufactured material, article, commodity, supply, equipment, component, accessory, part, assembly, or product of any kind, technical information, process, or service.

*Letter of understanding* means an official action that may be issued in resolving special priorities assistance cases to reflect an agreement reached by all parties (USDA, the Department of Commerce (if applicable), a delegate agency (if applicable), the supplier, and the customer).

*Livestock* means all farm-raised animals.

*Livestock resources* means materials, facilities, vehicles, health supplies, services, and equipment required for the production and distribution of livestock.

*Maintenance and repair and operating supplies (MRO)* means:

(1) *Maintenance* is the upkeep necessary to continue any plant, facility, or equipment in working condition.

(2) *Repair* is the restoration of any plant, facility, or equipment to working condition when it has been rendered unsafe or unfit for service by wear and tear, damage, or failure of parts.

(3) *Operating supplies* are any resources carried as operating supplies according to a person's established accounting practice. Operating supplies may include hand tools and expendable tools, jigs, dies, fixtures used on production equipment, lubricants, cleaners, chemicals, and other expendable items.

(4) *MRO* does not include items produced or obtained for sale to other persons or for installation upon or attachment to the property of another person, or items required for the production of such items; items needed for the replacement of any plant, facility, or equipment; or items for the improvement of any plant, facility, or equipment by replacing items that are still in working condition with items of a new or different kind, quality, or design.

*Materials* includes:

(1) Any raw materials (including minerals, metals, and advanced processed materials), commodities, articles, components (including critical components), products, and items of supply; and

(2) Any technical information or services ancillary to the use of any such materials, commodities, articles, components, products, or items.

*National defense* means programs for military and energy production or construction, military or critical infrastructure assistance to any foreign nation, homeland security, stockpiling, space, and any directly related activity. Such term includes emergency preparedness activities conducted

pursuant to Title VI of the Stafford Act and critical infrastructure protection and restoration.

*Official action* means an action taken by USDA or another resource agency under the authority of the Defense Production Act, Executive Order 13603, or this part. Such actions include the issuance of rating authorizations, directives, set-asides, allotments, letters of understanding, demands for information, inspection authorizations, and administrative subpoenas.

*Person* includes an individual, corporation, partnership, association, or any other organized group of persons, or legal successor or representative thereof, or any State or local government or agency thereof, or any Federal agency.

*Plant health resources* means biological products, materials, facilities, vehicles, supplies, services, and equipment required to prevent the impairment of, improve, or restore plant health conditions.

*Rated order* means a prime contract, a subcontract, or a purchase order in support of an approved program issued as specified in the provisions of this part. Persons may request an order (contract) be rated in response to a need that is defined in this part. However, an order does not become rated until the request is approved by USDA. USDA will assign a rating priority for each rating request approved that designates the priority of that order over other orders that have similar order specifics.

*Resource agency* means any agency that is delegated priorities and allocations authority as specified in § 789.2.

*Secretary* means the Secretary of Agriculture.

*Seed* is used with its commonly understood meaning and includes all seed grown for and customarily sold to users for planting for the production of agriculture crops.

*Services* includes any effort that is needed for or incidental to:

(1) The development, production, processing, distribution, delivery, or use of an industrial resource or a critical technology item;

(2) The construction of facilities;

(3) The movement of individuals and property by all modes of civil transportation; or

(4) Other national defense programs and activities.

*Set-aside* means an official action that requires a person to reserve materials, services, or facilities capacity in anticipation of the receipt of rated orders.

*Stafford Act* means the Robert T. Stafford Disaster Relief and Emergency Assistance Act, as amended (42 U.S.C. 5195–5197h).

*USDA* means the U.S. Department of Agriculture.

*Veterinary resources* means drugs, biological products, medical devices, materials, facilities, vehicles, health supplies, services, and equipment required to diagnose, mitigate or prevent the impairment of, improve, treat, cure, or restore the health conditions of the animal population.

*Water resources* means all usable water, from all sources, within the jurisdiction of the United States, that can be managed, controlled, and allocated to meet emergency requirements, except water resources does not include usable water that qualifies as food resources.

## Subpart C—Placement of Rated Orders

### § 789.10 Delegations of authority.

(a) [Reserved]

(b) Within USDA, authority to administer APAS has been delegated to the Administrator, Farm Service Agency, through the Under Secretary for Farm and Foreign Agricultural Services. (See §§ 2.16(a)(6) and 2.42(a)(5) of this title.) The Farm Service Agency Administrator will coordinate APAS implementation and administration through the Director, USDA Office of Homeland Security and Emergency Coordination, as delegated by the Assistant Secretary for Administration. (See §§ 2.24(a)(8)(ii)(A) and 2.24(a)(8)(v); 2.95(b)(1)(i) and 2.95(b)(4) of this title.)

### § 789.11 Priority ratings.

(a) *Levels of priority.* Priority levels designate differences between orders based on national defense including emergency preparedness requirements.

(1) There are two levels of priority established by APAS, identified by the rating symbols ''DO'' and ''DX.''

(2) All DO-rated orders have equal priority with each other and take precedence over unrated orders. All DX-rated orders have equal priority with each other and take precedence over DO-rated orders and unrated orders. (For resolution of conflicts among rated orders of equal priority, see § 789.14(c).)

(3) In addition, a directive regarding priority treatment for a given item issued by the resource agency with priorities jurisdiction for that item takes precedence over any DX-rated order, DO-rated order, or unrated order, as stipulated in the directive. (For more information on directives, see § 789.42.)

(b) *Program identification symbols.* Program identification symbols indicate which approved program is being supported by a rated order. The list of currently approved programs and their identification symbols are listed in Schedule I. For example, P1 identifies a program involving food and food resources processing and storage. Program identification symbols, in themselves, do not connote any priority. Additional programs may be approved under the procedures of Executive Order 13603 at any time.

(c) *Priority ratings.* A priority rating consists of the rating symbol DO or DX followed by the program identification symbol, such as P1 or P2. Thus, a contract for the supply of livestock feed will contain a DO–P1 or DX–P1 priority rating.

### § 789.12 Elements of a rated order.

(a) Each rated order must include:

(1) The appropriate priority rating (for example, DO–P1 for food and food resources processing and storage);

(2) A required delivery date or dates. The words ''immediately'' or ''as soon as possible'' do not constitute a delivery date. Some purchase orders, such as a ''requirements contract,'' ''basic ordering agreement,'' ''prime vendor contract,'' or similar procurement document, bearing a priority rating may contain no specific delivery date or dates if it provides for the furnishing of items or services from time-to-time or within a stated period against specific purchase orders, such as calls, requisitions, and delivery orders. Specific purchase orders must specify a required delivery date or dates and are to be considered as rated as of the date of their receipt by the supplier and not as of the date of the original procurement document;

(3) The written signature on a manually placed order, or the digital signature or name on an electronically placed order, of an individual authorized to sign rated orders for the person placing the order. The signature or use of the name certifies that the rated order is authorized under this part and that the requirements of this part are being followed; and

(4) A statement as follows:

(i) A statement that reads:

This is a rated order certified for national defense use, and you are required to follow all the provisions of the Agriculture Priorities and Allocations System regulation in 7 CFR part 789.

(ii) If the rated order is placed in support of emergency preparedness requirements and expedited action is necessary and appropriate to meet these requirements, the following sentences should be added following the

statement specified in paragraph (a)(4)(i) of this section:

This rated order is placed for the purpose of emergency preparedness. It must be accepted or rejected within six (6) hours after receipt of the order if the order is issued in response to a hazard that has occurred; or within the greater of twelve (12) hours or the time specified in the order, if the order is issued to prepare for an imminent hazard, in accordance with 7 CFR 789.13(e).

(b) [Reserved]

**§ 789.13 Acceptance and rejection of rated orders.**

(a) *Mandatory acceptance.* A person must accept a rated order in accordance with the following requirements:

(1) Except as otherwise specified in this section, a person must accept every rated order received and must fill such orders regardless of any other rated or unrated orders that have been accepted.

(2) A person must not discriminate against rated orders in any manner such as by charging higher prices or by imposing different terms and conditions than for comparable unrated orders.

(b) *Mandatory rejection.* Unless otherwise directed by USDA for a rated order involving food resources, food resource facilities, livestock resources, veterinary resources, plant health resources, or the domestic distribution of farm equipment and commercial fertilizer:

(1) A person must not accept a rated order for delivery on a specific date if unable to fill the order by that date. However, the person must inform the customer of the earliest date on which delivery can be made and offer to accept the order on the basis of that date. Scheduling conflicts with previously accepted lower rated or unrated orders are not sufficient reason for rejection in this section.

(2) A person must not accept a DO-rated order for delivery on a date that would interfere with delivery of any previously accepted DO- or DX-rated orders. However, the person must offer to accept the order based on the earliest delivery date otherwise possible.

(3) A person must not accept a DX-rated order for delivery on a date that would interfere with delivery of any previously accepted DX-rated orders, but must offer to accept the order based on the earliest delivery date otherwise possible.

(4) If a person is unable to fill all of the rated orders of equal priority status received on the same day, the person must accept, based upon the earliest delivery dates, only those orders that can be filled, and reject the other orders. For example, a person must accept order A requiring delivery on December 15 before accepting order B requiring delivery on December 31. However, the person must offer to accept the rejected orders based on the earliest delivery dates otherwise possible.

(5) A person must reject the rated order if the person is prohibited by Federal law from meeting the terms of the order.

(c) *Optional rejection.* Unless otherwise directed by USDA for a rated order involving food resources, food resource facilities, livestock resources, veterinary resources, plant health resources, or the domestic distribution of farm equipment and commercial fertilizer, rated orders may be rejected in any of the following cases as long as a supplier does not discriminate among customers:

(1) If the person placing the order is unwilling or unable to meet regularly established terms of sale or payment;

(2) If the order is for an item not supplied or for a service not capable of being performed;

(3) If the order is for an item or service produced, acquired, or provided only for the supplier's own use for which no orders have been filled for 2 years prior to the date of receipt of the rated order. If, however, a supplier has sold some of these items or provided similar services, the supplier is obligated to accept rated orders up to that quantity or portion of production or service, whichever is greater, sold or provided within the past 2 years;

(4) If the person placing the rated order, other than the Federal Government, makes the item or performs the service being ordered;

(5) If acceptance of a rated order or performance against a rated order would violate any other regulation, official action, or order of USDA, issued under the authority of the Defense Production Act or another relevant law.

(d) *Customer notification requirements.* A person in receipt of a rated order is required to provide to the customer placing the order written or electronic notification of acceptance or rejection of the order.

(1) Except as provided in paragraph (e) of this section, a person must accept or reject a rated order in writing or electronically within fifteen (15) working days after receipt of a DO-rated order and within ten (10) working days after receipt of a DX-rated order. If the order is rejected, the person must give reasons in writing or electronically for the rejection.

(2) If a person has accepted a rated order and subsequently finds that shipment or performance will be delayed, the person must notify the customer immediately, give the reasons for the delay, and advise of a new shipment or performance date. If notification is given verbally, written or electronic confirmation must be provided within 5 working days.

(e) *Exception for emergency preparedness conditions.* If the rated order is placed for the purpose of emergency preparedness and includes the additional statement as specified in § 789.12(a)(4)(ii), a person must accept or reject a rated order and send the acceptance or rejection in writing or in an electronic format:

(1) Within 6 hours after receipt of the order if the order is issued in response to a hazard that has occurred; or

(2) Within the greater of 12 hours or the time specified in the order, if the order is issued to prepare for an imminent hazard.

**§ 789.14 Preferential scheduling.**

(a) A person must schedule operations, including the acquisition of all needed production items or services, in a timely manner to satisfy the delivery requirements of each rated order. Modifying production or delivery schedules is necessary only when required delivery dates for rated orders cannot otherwise be met.

(b) DO-rated orders must be given production preference over unrated orders, if necessary to meet required delivery dates, even if this requires the diversion of items being processed or ready for delivery or services being performed against unrated orders. Similarly, DX-rated orders must be given preference over DO-rated orders and unrated orders. (Examples: If a person receives a DO-rated order with a delivery date of June 3 and if meeting that date would mean delaying production or delivery of an item for an unrated order, the unrated order must be delayed. If a DX-rated order is received calling for delivery on July 15 and a person has a DO-rated order requiring delivery on June 2 and operations can be scheduled to meet both deliveries, there is no need to alter production schedules to give any additional preference to the DX-rated order.)

(c) For conflicting rated orders:

(1) If a person finds that delivery or performance against any accepted rated orders conflicts with the delivery or performance against other accepted rated orders of equal priority status, the person must give precedence to the conflicting orders in the sequence in which they are to be delivered or performed (not to the receipt dates). If the conflicting orders are scheduled to be delivered or performed on the same day, the person must give precedence to

those orders that have the earliest receipt dates.

(2) If a person is unable to resolve rated order delivery or performance conflicts as specified in this section, the person should promptly seek special priorities assistance as provided in §§ 789.20 through 789.24. If the person's customer objects to the rescheduling of delivery or performance of a rated order, the customer should promptly seek special priorities assistance as specified in §§ 789.20 through 789.24. For any rated order against which delivery or performance will be delayed, the person must notify the customer as provided in § 789.13(d)(2).

(d) If a person is unable to purchase needed production items in time to fill a rated order by its required delivery date, the person must fill the rated order by using inventoried production items. A person who uses inventoried items to fill a rated order may replace those items with the use of a rated order as provided in § 789.17(b).

**§ 789.15 Extension of priority ratings.**

(a) A person must use rated orders as necessary with suppliers to obtain items or services needed to fill a rated order. The person must use the priority rating indicated on the customer's rated order, except as otherwise provided in this part or as directed by USDA.

(b) The priority rating must be included as necessary on each successive order placed to obtain items or services needed to fill a customer's rated order. This continues from contractor to subcontractor to supplier throughout the entire procurement chain.

**§ 789.16 Changes or cancellations of priority ratings and rated orders.**

(a) The priority rating on a rated order may be changed or canceled by:

(1) An official action of USDA; or

(2) Written notification from the person who placed the rated order.

(b) If an unrated order is amended so as to make it a rated order, or a DO rating is changed to a DX rating, the supplier must give the appropriate preferential treatment to the order as of the date the change is received by the supplier.

(c) An amendment to a rated order that significantly alters a supplier's original production or delivery schedule constitutes a new rated order as of the date of its receipt. The supplier must accept or reject the amended order according to the provisions of § 789.13.

(d) The following amendments do not constitute a new rated order:

(1) A change in shipping destination;

(2) A reduction in the total amount of the order;

(3) An increase in the total amount of the order that has a negligible impact upon deliveries;

(4) A minor variation in size or design; or

(5) A change that is agreed upon between the supplier and the customer.

(e) If a person no longer needs items or services to fill a rated order, any rated orders placed with suppliers for the items or services, or the priority rating on those orders, must be canceled.

(f) When a priority rating is added to an unrated order, or is changed or canceled, all suppliers must be promptly notified in writing.

**§ 789.17 Use of rated orders.**

(a) A person must use rated orders as necessary to obtain:

(1) Items that will be physically incorporated into other items to fill rated orders, including that portion of such items normally consumed or converted into scrap or by-products in the course of processing;

(2) Containers or other packaging materials required to make delivery of the finished items against rated orders;

(3) Services, other than contracts of employment, needed to fill rated orders; and

(4) MRO needed to produce the finished items to fill rated orders.

(b) A person may use a rated order to replace inventoried items (including finished items) if such items were used to fill rated orders, as follows:

(1) The order must be placed within 90 days of the date of use of the inventory.

(2) A DO rating and the program identification symbol indicated on the customer's rated order must be used on the order. A DX rating must not be used even if the inventory was used to fill a DX-rated order.

(3) If the priority ratings on rated orders from one customer or several customers contain different program identification symbols, the rated orders may be combined. In this case, the program identification symbol P4 must be used (that is DO–P4).

(c) A person may combine DX- and DO-rated orders from one customer or several customers if the items or services covered by each level of priority are identified separately and clearly. If different program identification symbols are indicated on those rated orders of equal priority, the person must use the program identification symbol P4 (that is DO–P4 or DX–P4).

(d) For combining rated and unrated orders:

(1) A person may combine rated and unrated order quantities on one purchase order provided that:

(i) The rated quantities are separately and clearly identified; and

(ii) The four elements of a rated order, as required by § 789.12, are included on the order with the statement required in § 789.12(a)(4)(i) modified to read:

> This purchase order contains rated order quantities certified for national defense use, and you are required to follow all the provisions of the Agriculture Priorities and Allocations System regulation in 7 CFR part 789 only as it pertains to the rated quantities.

(2) A supplier must accept or reject the rated portion of the purchase order as provided in § 789.13 and give preferential treatment only to the rated quantities as required by this part. This part must not be used to require preferential treatment for the unrated portion of the order.

(3) Any supplier who believes that rated and unrated orders are being combined in a manner contrary to the intent of this part or in a fashion that causes undue or exceptional hardship may submit a request for adjustment or exception as specified in § 789.60.

(e) A person may place a rated order for the minimum commercially procurable quantity even if the quantity needed to fill a rated order is less than that minimum. However, a person must combine rated orders as provided in paragraph (c) of this section, if possible, to obtain minimum procurable quantities.

(f) A person is not required to place a priority rating on an order for less than $75,000 or one-half of the Simplified Acquisition Threshold (as established in the Federal Acquisition Regulation (FAR) (see 48 CFR 2.101) or in other authorized acquisition regulatory or management systems) whichever amount is greater, provided that delivery can be obtained in a timely fashion without the use of the priority rating.

**§ 789.18 Limitations on placing rated orders.**

(a) *General limitations.* Rated orders may be placed only by persons with the proper authority for items and services that are needed to support approved programs.

(1) A person must not place a DO- or DX-rated order unless authorized by USDA to do so under this part.

(2) Rated orders must not be used to obtain:

(i) Delivery on a date earlier than needed;

(ii) A greater quantity of the item or services than needed, except to obtain a minimum procurable quantity. Separate rated orders must not be placed solely for the purpose of obtaining minimum procurable quantities on each order;

(iii) Items or services in advance of the receipt of a rated order, except as specifically authorized by USDA (see § 789.21(c) for information on obtaining authorization for a priority rating in advance of a rated order);

(iv) Items that are not needed to fill a rated order, except as specifically authorized by USDA or as otherwise permitted by this part;

(v) Any of the following items unless specific priority rating authority has been obtained from USDA or the Department of Commerce, as appropriate:

(A) Items for plant improvement, expansion, or construction, unless they will be physically incorporated into a construction project covered by a rated order; and

(B) Production or construction equipment or items to be used for the manufacture of production equipment. For information on requesting priority rating authority, see § 789.21; or

(vi) Any items related to the development of chemical or biological warfare capabilities or the production of chemical or biological weapons, unless such development or production has been authorized by the President or the Secretary of Defense.

(b) *Jurisdictional limitations.* (1) Unless authorized by the resource agency with jurisdiction (see § 789.10), the provisions of this part are not applicable to the following resources:

(i) All forms of energy (Resource agency with jurisdiction—Department of Energy);

(ii) Health resources (Resource agency with jurisdiction—Department of Health and Human Services);

(iii) All forms of civil transportation (Resource agency with jurisdiction—Department of Transportation);

(iv) Water resources (Resource agency with jurisdiction—Department of Defense, U.S. Army Corps of Engineers);

(v) All materials, services, and facilities, including construction materials for which the authority has not been delegated to other agencies under Executive Order 13603 (Resource agency with jurisdiction—Department of Commerce); and

(2) The priorities and allocations authority in this part may not be applied to communications services subject to Executive Order 13618 of July 6, 2012 (3 CFR, 2012 Comp., p. 273).

## Subpart D—Special Priorities Assistance

### § 789.20 General provisions.

(a) APAS is designed to be largely self-executing. However, if production or delivery problems arise, a person should immediately contact the Farm Service Agency Administrator for special priorities assistance pursuant to §§ 789.20 through 789.24 and as directed by § 789.73. If the Farm Service Agency is unable to resolve the problem or to authorize the use of a priority rating and believes additional assistance is warranted, USDA may forward the request to another resource agency, as appropriate, for action. Special priorities assistance is a service provided to alleviate problems.

(b) Special priorities assistance is available for any reason consistent with this part. Generally, special priorities assistance is provided to expedite deliveries, resolve delivery conflicts, place rated orders, locate suppliers, or verify information supplied by customers and vendors. Special priorities assistance may also be used to request rating authority for items that are not normally eligible for priority treatment.

(c) A request for special priorities assistance or priority rating authority must be submitted on Form AD–2102 (OMB Control Number 0560–0280) to the Farm Service Agency as provided in paragraph (a) of this section. Form AD–2102 may be obtained from USDA by downloading the form and instructions from *http://forms.sc.egov.usda.gov/eForms/welcomeAction.do?Home* or by contacting the Administrator of the Farm Service Agency as specified in § 789.73. Either mail or fax the form to USDA, using the address or fax number shown on the form.

### § 789.21 Requests for priority rating authority.

(a) *Rating authority for items or services not normally rated.* If a rated order is likely to be delayed because a person is unable to obtain items or services not normally rated under this part, the person may request the authority to use a priority rating in ordering the needed items or services.

(b) *Rating authority for production or construction equipment.* For a rated order for production or construction equipment not under the resource jurisdiction of USDA, follow the regulation in 15 CFR part 700.

(1) A request for priority rating authority for production or construction equipment must be submitted to the U.S. Department of Commerce on Form BIS–999 (see 15 CFR 700.51). Form BIS–999 may be obtained from USDA as specified in § 789.20(c) or from the Department of Commerce as specified in 15 CFR 700.50.

(2) When the use of a priority rating is authorized for the procurement of production or construction equipment, a rated order may be used either to purchase or to lease such equipment. However, in the latter case, the equipment may be leased only from a person engaged in the business of leasing such equipment or from a person willing to lease rather than sell.

(c) For rating authority in advance of a rated prime contract:

(1) In certain cases and upon specific request, USDA, in order to promote the national defense, may authorize a person to place a priority rating on an order to a supplier in advance of the issuance of a rated prime contract. In these instances, the person requesting advance rating authority must obtain sponsorship of the request from USDA. The person assumes any business risk associated with the placing of a rated order if the order has to be canceled in the event the rated prime contract is not issued.

(2) The person must state the following in the request:

> It is understood that the authorization of a priority rating in advance of our receiving a rated prime contract from USDA and our use of that priority rating with our suppliers in no way commits USDA or any other government agency to enter into a contract or order or to expend funds. Further, we understand that the Federal Government will not be liable for any cancellation charges, termination costs, or other damages that may accrue if a rated prime contract is not eventually placed and, as a result, we must subsequently cancel orders placed with the use of the priority rating authorized as a result of this request.

(3) In reviewing requests for rating authority in advance of a rated prime contract, USDA will consider, among other things, the following criteria:

(i) The probability that the prime contract will be awarded;

(ii) The impact of the resulting rated orders on suppliers and on other authorized programs;

(iii) Whether the contractor is the sole source;

(iv) Whether the item being produced has a long lead time; and

(v) The time period for which the rating is being requested.

(4) USDA may require periodic reports on the use of the rating authority granted through paragraph (c) of this section.

(5) If a rated prime contract is not issued, the person will promptly notify each supplier who has received any rated order related to the advanced rating authority that the priority rating on the order is canceled.

### § 789.22 Examples of assistance.

(a) While special priorities assistance may be provided for any reason in

support of this part, it is usually provided in situations in which:

(1) A person is experiencing difficulty in obtaining delivery against a rated order by the required delivery date; or

(2) A person cannot locate a supplier for an item or service needed to fill a rated order.

(b) Other examples of special priorities assistance include:

(1) Ensuring that rated orders receive preferential treatment by suppliers;

(2) Resolving production or delivery conflicts between various rated orders;

(3) Assisting in placing rated orders with suppliers;

(4) Verifying the urgency of rated orders; and

(5) Determining the validity of rated orders.

### § 789.23 Criteria for assistance.

(a) Requests for special priorities assistance should be timely (for example, the request has been submitted promptly and enough time exists for USDA to meaningfully resolve the problem), and must establish that:

(1) There is an urgent need for the item; and

(2) The applicant has made a reasonable effort to resolve the problem.

(b) [Reserved]

### § 789.24 Instances in which assistance must not be provided.

(a) Special priorities assistance is provided at the discretion of USDA when it is determined that such assistance is warranted to meet the objectives of this part. Examples in which assistance must not be provided include situations in which a person is attempting to:

(1) Secure a price advantage;

(2) Obtain delivery prior to the time required to fill a rated order;

(3) Gain competitive advantage;

(4) Disrupt an industry apportionment program in a manner designed to provide a person with an unwarranted share of scarce items; or

(5) Overcome a supplier's regularly established terms of sale or conditions of doing business.

(b) [Reserved]

## Subpart E—Allocations Actions

### § 789.30 Policy.

(a) It is the policy of the Federal Government that the allocations authority under Title I of the Defense Production Act may:

(1) Only be used when there is insufficient supply of a material, service, or facility to satisfy national defense supply requirements through the use of the priorities authority or when the use of the priorities authority would cause a severe and prolonged disruption in the supply of materials, services, or facilities available to support normal U.S. economic activities; and

(2) Not be used to ration materials or services at the retail level.

(b) Allocations orders, when used, will be distributed equitably among the suppliers of the materials, services, or facilities being allocated and not require any person to relinquish a disproportionate share of the civilian market.

### § 789.31 General procedures.

(a) When USDA plans to execute its allocations authority to address a supply problem within its resource jurisdiction, USDA will develop a plan that includes the following information:

(1) A copy of the written determination made in accordance with section 202 of Executive Order 13603, that the program or programs that would be supported by the allocations action are necessary or appropriate to promote the national defense;

(2) A detailed description of the situation to include any unusual events or circumstances that have created the requirement for an allocations action;

(3) A statement of the specific objective(s) of the allocations action;

(4) A list of the materials, services, or facilities to be allocated;

(5) A list of the sources of the materials, services, or facilities that will be subject to the allocations action;

(6) A detailed description of the provisions that will be included in the allocations orders, including the type(s) of allocations orders, the percentages or quantity of capacity or output to be allocated for each purpose, and the duration of the allocations action (for example, anticipated start and end dates);

(7) An evaluation of the impact of the proposed allocations action on the civilian market; and

(8) Proposed actions, if any, to mitigate disruptions to civilian market operations.

(b) [Reserved]

### § 789.32 Precedence over priority rated orders.

If a conflict occurs between an allocations order and an unrelated rated order or priorities directive, the allocations order takes precedence.

### § 789.33 Controlling the general distribution of a material in the civilian market.

(a) No allocations by USDA may be used to control the general distribution of a material in the civilian market, unless the Secretary has:

(1) Made a written finding that:

(i) Such material is a scarce and critical material essential to the national defense; and

(ii) The requirements of the national defense for such material cannot otherwise be met without creating a significant dislocation of the normal distribution of such material in the civilian market to such a degree as to create appreciable hardship;

(2) Submitted the finding for the President's approval through the Assistant to the President and National Security Advisor and the Assistant to the President for Homeland Security and Counterterrorism; and

(3) The President has approved the finding.

(b) [Reserved]

### § 789.34 Types of allocations orders.

(a) The three types of allocations orders that may be used for allocations actions are:

(1) Set-asides;

(2) Directives; and

(3) Allotments.

(b) [Reserved]

### § 789.35 Elements of an allocations order.

(a) Each allocations order will include:

(1) A detailed description of the required allocations action(s);

(2) Specific start and end calendar dates for each required allocations action;

(3) The Secretary's written signature on a manually placed order, or the digital signature or name on an electronically placed order, of the Secretary. The signature or use of the name certifies that the order is authorized as specified in this part and that the requirements of this part are being followed;

(4) A statement that reads: ''This is an allocations order certified for national defense use. [Insert the legal name of the person receiving the order] is required to comply with this order, in accordance with the provisions of 7 CFR part 789;'' and

(5) A current copy of the APAS regulation (7 CFR part 789).

(b) [Reserved]

### § 789.36 Mandatory acceptance of allocations orders.

(a) A person must accept every allocations order received that the person is capable of fulfilling, and must comply with such orders regardless of any rated order that the person may be in receipt of or other commitments involving the resource(s) covered by the allocations order.

(b) A person must not discriminate against an allocations order in any

manner such as by charging higher prices for resources covered by the order or by imposing terms and conditions for contracts and orders involving allocated resources(s) that differ from the person's terms and conditions for contracts and orders for the resource(s) prior to receiving the allocations order.

(c) If circumstances prevent a person from being able to accept an allocations order, the person must comply with the provisions specified in § 789.60 upon realization of the inability to accept the order.

**§ 789.37 Changes or cancellations of allocations orders.**

An allocations order may be changed or canceled by an official action of USDA.

## Subpart F—Official Actions

**§ 789.40 General provisions.**

(a) USDA may take specific official actions to implement the provisions of this part.

(b) Several of these official actions (rating authorizations, directives, and letters of understanding) are discussed in this subpart. Other official actions that pertain to compliance (administrative subpoenas, demands for information, and inspection authorizations) are discussed in § 789.51(c).

**§ 789.41 Rating authorizations.**

(a) A rating authorization is an official action granting specific priority rating authority that:

(1) Permits a person to place a priority rating on an order for an item or service not normally ratable under this part; or

(2) Authorizes a person to modify a priority rating on a specific order or series of contracts or orders.

(b) To request priority rating authority, see section § 789.21.

**§ 789.42 Directives.**

(a) A directive is an official action that requires a person to take or refrain from taking certain actions in accordance with the provisions of the directive.

(b) A person must comply with each directive issued. However, a person may not use or extend a directive to obtain any items from a supplier, unless expressly authorized to do so in the directive.

(c) A priorities directive takes precedence over all DX-rated orders, DO-rated orders, and unrated orders previously or subsequently received, unless a contrary instruction appears in the directive.

(d) An allocations directive takes precedence over all priorities directives, DX-rated orders, DO-rated orders, and unrated orders previously or subsequently received, unless a contrary instruction appears in the directive.

**§ 789.43 Letters of understanding.**

(a) A letter of understanding is an official action that may be issued in resolving special priorities assistance cases to reflect an agreement reached by all parties (USDA, the Department of Commerce (if applicable), a delegate agency (if applicable), the supplier, and the customer).

(b) A letter of understanding is not used to alter scheduling between rated orders, to authorize the use of priority ratings, to impose restrictions under this part, or to take other official actions. Rather, letters of understanding are used to confirm production or shipping schedules that do not require modifications to other rated orders.

## Subpart G—Compliance

**§ 789.50 General provisions.**

(a) USDA may take specific official actions for any reason necessary or appropriate to the enforcement or the administration of the Defense Production Act and other applicable statutes, this part, or an official action. Such actions include administrative subpoenas, demands for information, and inspection authorizations.

(b) Any person who places or receives a rated order or an allocations order must comply with the provisions of this part.

(c) Willful violation of the provisions of Title I or section 705 of the Defense Production Act and other applicable statutes, this part, or an official action of USDA, is a criminal act, punishable as provided in the Defense Production Act and other applicable statutes, and as specified in § 789.54.

**§ 789.51 Audits and investigations.**

(a) Audits and investigations are official examinations of books, records, documents, other writings, and information to ensure that the provisions of the Defense Production Act and other applicable statutes, this part, and official actions have been properly followed. An audit or investigation may also include interviews and a systems evaluation to detect problems or failures in the implementation of this part.

(b) When undertaking an audit, investigation, or other inquiry, USDA will:

(1) *Scope and purpose.* Define the scope and purpose in the official action given to the person under investigation; and

(2) *Information not available.* Have ascertained that the information sought or other adequate and authoritative data are not available from any Federal or other responsible agency.

(c) In administering this part, USDA may issue the following documents that constitute official actions:

(1) *Administrative subpoenas.* An administrative subpoena requires a person to appear as a witness before an official designated by USDA to testify under oath on matters of which that person has knowledge relating to the enforcement or the administration of the Defense Production Act and other applicable laws, this part, or official actions. An administrative subpoena may also require the production of books, papers, records, documents, and physical objects or property.

(2) *Demands for information.* A demand for information requires a person to furnish to a duly authorized representative of USDA any information necessary or appropriate to the enforcement or the administration of the Defense Production Act and other applicable statutes, this part, or official actions.

(3) *Inspection authorizations.* An inspection authorization requires a person to permit a duly authorized representative of USDA to interview the person's employees or agents, to inspect books, records, documents, other writings, and information, including electronically-stored information, in the person's possession or control at the place where that person usually keeps them or otherwise, and to inspect a person's property when such interviews and inspections are necessary or appropriate to the enforcement or the administration of the Defense Production Act and other related laws, this part, or official actions.

(d) The production of books, records, documents, other writings, and information will not be required at any place other than where they are usually kept if, prior to the return date specified in the administrative subpoena or demand for information, a duly authorized official of USDA is furnished with copies of such material that are certified under oath to be true copies. As an alternative, a person may enter into a stipulation with a duly authorized official of USDA as to the content of the material.

(e) An administrative subpoena, demand for information, or inspection authorization will include the name, title, or official position of the person to be served, the evidence sought, and its general relevance to the scope and purpose of the audit, investigation, or other inquiry. If employees or agents are to be interviewed; if books, records, documents, other writings, or

information are to be produced; or if property is to be inspected; the administrative subpoena, demand for information, or inspection authorization will describe the requirements.

(f) Service of documents will be made in the following manner:

(1) *In person.* Service of a demand for information or inspection authorization will be made personally, or by certified mail-return receipt requested at the person's last known address. Service of an administrative subpoena will be made personally. Personal service may also be made by leaving a copy of the document with someone at least 18 years old at the person's last known dwelling or place of business.

(2) *Other than to the named individual.* Service upon other than an individual may be made by serving a partner, corporate officer, or a managing or general agent authorized by appointment or by law to accept service of process. If an agent is served, a copy of the document will be mailed to the person named in the document.

(3) *Delivering individual and documentation.* Any individual 18 years of age or over may serve an administrative subpoena, demand for information, or inspection authorization. When personal service is made, the individual making the service must prepare an affidavit specifying the manner in which service was made and the identity of the person served, and return the affidavit, and in the case of subpoenas, the original document, to the issuing officer. In case of failure to make service, the reasons for the failure will be stated on the original document.

**§ 789.52 Compulsory process.**

(a) If a person refuses to permit a duly authorized representative of USDA to have access to any premises or source of information necessary to the administration or the enforcement of the Defense Production Act and other applicable laws, this part, or official actions, the USDA representative may seek compulsory process. Compulsory process is the institution of appropriate legal action, including ex parte application for an inspection warrant or its equivalent, in any forum of appropriate jurisdiction.

(b) Compulsory process may be sought in advance of an audit, investigation, or other inquiry, if, in the judgment of USDA, there is reason to believe that a person will refuse to permit an audit, investigation, or other inquiry, or that other circumstances exist that make such process desirable or necessary.

**§ 789.53 Notification of failure to comply.**

(a) At the conclusion of an audit, investigation, or other inquiry, or at any other time, USDA may inform the person in writing when compliance with the requirements of the Defense Production Act and other applicable laws, this part, or an official action was not met.

(b) In cases in which USDA determines that failure to comply with the provisions of the Defense Production Act and other applicable laws, this part, or an official action was inadvertent, the person may be informed in writing of the particulars involved and the corrective action to be taken. Failure to take corrective action may then be construed as a willful violation of the Defense Production Act and other applicable laws, this part, or an official action.

**§ 789.54 Violations, penalties, and remedies.**

(a) Willful violation of the Defense Production Act, the priorities provisions of the Military Selective Service Act (50 U.S.C. App. 468), this part, or an official action, is a crime and upon conviction, a person may be punished by fine or imprisonment, or both. The maximum penalty provided by the Defense Production Act is a $10,000 fine, or 1 year in prison, or both. The maximum penalty provided by the Military Selective Service Act is a $50,000 fine, or 3 years in prison, or both.

(b) The Government may also seek an injunction from a court of appropriate jurisdiction to prohibit the continuance of any violation of, or to enforce compliance with, the Defense Production Act, this part, or an official action.

(c) In order to secure the effective enforcement of the Defense Production Act and other applicable laws, this part, and official actions, certain actions as follows are prohibited:

(1) Soliciting, influencing, or permitting another person to perform any act prohibited by, or to omit any act required by, the Defense Production Act and other applicable laws, this part, or an official action.

(2) Conspiring or acting in concert with any other person to perform any act prohibited by, or to omit any act required by, the Defense Production Act and other applicable laws, this part, or an official action.

(3) Delivering any item if the person knows or has reason to believe that the item will be accepted, redelivered, held, or used in violation of the Defense Production Act and other applicable laws, this part, or an official action. In such instances, the person must immediately notify USDA that, in accordance with this provision, delivery has not been made.

**§ 789.55 Compliance conflicts.**

If compliance with any provision of the Defense Production Act and other applicable laws, this part, or an official action would prevent a person from filling a rated order or from complying with another provision of the Defense Production Act and other applicable laws, this part, or an official action, the person must immediately notify USDA for resolution of the conflict.

## Subpart H—Adjustments, Exceptions, and Appeals

**§ 789.60 Adjustments or exceptions.**

(a) A person may submit a request to the Farm Service Agency Deputy Administrator for Management, as directed in § 789.73, for an adjustment or exception on the ground that:

(1) A provision of this part or an official action results in an undue or exceptional hardship on that person not suffered generally by others in similar situations and circumstances; or

(2) The consequences of following a provision of this part or an official action is contrary to the intent of the Defense Production Act and other applicable laws, or this part.

(b) Each request for adjustment or exception must be in writing and contain a complete statement of all the facts and circumstances related to the provision of this part or official action from which adjustment is sought and a full and precise statement of the reasons why relief should be provided.

(c) The submission of a request for adjustment or exception will not relieve any person from the obligation of complying with the provision of this part or official action in question while the request is being considered unless such interim relief is granted in writing by the Farm Service Agency Deputy Administrator for Management.

(d) A decision of the Farm Service Agency Deputy Administrator for Management under this section may be appealed to the Farm Service Agency Administrator. (For information on the appeal procedure, see § 789.61.)

**§ 789.61 Appeals.**

(a) Any person whose request for adjustment or exception has been denied by the Farm Service Agency Deputy Administrator for Management as specified in § 789.60, may appeal to the Farm Service Agency Administrator who will review and reconsider the denial.

(b) A person must submit the appeal in writing to the Farm Service Agency Administrator as follows:

(1) Except as provided in paragraph (b)(2) of this section, an appeal must be received by the Farm Service Agency Administrator no later than 45 days after receipt of a written notice of denial from the Farm Service Agency Deputy Administrator for Management. After the 45-day period, an appeal may be accepted at the discretion of the Farm Service Agency Administrator if the person shows good cause.

(2) For requests for adjustment or exception involving rated orders placed for the purpose of emergency preparedness (see § 789.13(e)), an appeal must be received by the Farm Service Agency Administrator no later than 15 days after receipt of a written notice of denial from the Farm Service Agency Deputy Administrator for Management.

(c) Contract performance under the order may not be stayed pending resolution of the appeal.

(d) Each appeal must be in writing and contain a complete statement of all the facts and circumstances related to the appealed action and a full and precise statement of the reasons the decision should be modified or reversed.

(e) In addition to the written materials submitted in support of an appeal, an appellant may request, in writing, an opportunity for an informal hearing. This request may be granted or denied at the discretion of the Farm Service Agency Administrator.

(f) When a hearing is granted, the Farm Service Agency Administrator may designate an employee of the Farm Service Agency to conduct the hearing and to prepare a report. The hearing officer will determine all procedural questions and impose such time or other limitations deemed reasonable. If the hearing officer decides that a printed transcript is necessary, the transcript expenses must be paid by the appellant.

(g) When determining an appeal, the Farm Service Agency Administrator may consider all information submitted during the appeal as well as any recommendations, reports, or other relevant information and documents available to USDA, or consult with any other person or group.

(h) The submission of an appeal under this section will not relieve any person from the obligation of complying with the provision of this part or official action in question while the appeal is being considered unless such relief is granted in writing by the Farm Service Agency Administrator.

(i) The decision of the Farm Service Agency Administrator will be made within 5 days after receipt of the appeal, or within 1 day for appeals pertaining to emergency preparedness, and will be the final administrative action. The Administrator will issue a written statement of the reasons for the decision to the appellant.

## Subpart I—Miscellaneous Provisions

### § 789.70 Protection against claims.

A person will not be held liable for damages or penalties for any act or failure to act resulting directly or indirectly from compliance with any provision of this part, or an official action, even if such provision or action is subsequently declared invalid by judicial or other competent authority.

### § 789.71 Records and reports.

(a) Persons are required to make and preserve for at least 3 years, accurate and complete records of any transaction covered by this part or an official action.

(b) Records must be maintained in sufficient detail to permit the determination, upon examination, of whether each transaction complies with the provisions of this part or any official action. However, this part does not specify any particular method or system to be used.

(c) Records required to be maintained by this part must be made available for examination on demand by duly authorized representatives of USDA as provided in § 789.51.

(d) In addition, persons must develop, maintain, and submit any other records and reports to USDA that may be required for the administration of the Defense Production Act and other applicable statutes, and this part.

(e) Section 705(d) of the Defense Production Act, as implemented by Executive Order 13603, provides that information obtained under that section which the Secretary deems confidential, or with reference to which a request for confidential treatment is made by the person furnishing such information, will not be published or disclosed unless the Secretary determines that the withholding of this information is contrary to the interest of the national defense. Information required to be submitted to USDA in connection with the enforcement or administration of the Defense Production Act, this part, or an official action, is deemed to be confidential under section 705(d) of the Defense Production Act and will be handled in accordance with applicable Federal law.

### § 789.72 Applicability of this part and official actions.

(a) This part and all official actions, unless specifically stated otherwise, apply to transactions in any State, territory, or possession of the United States and the District of Columbia.

(b) This part and all official actions apply not only to deliveries to other persons but also include deliveries to affiliates and subsidiaries of a person and deliveries from one branch, division, or section of a single entity to another branch, division, or section under common ownership or control.

(c) This part and its schedules will not be construed to affect any administrative actions taken by USDA, or any outstanding contracts or orders placed based on any of the regulations, orders, schedules, or delegations of authority previously issued by USDA based on authority granted to the President in the Defense Production Act. Such actions, contracts, or orders will continue in full force and effect under this part unless modified or terminated by proper authority.

### § 789.73 Communications.

Except as otherwise provided, all communications concerning this part, including requests for copies of this part and explanatory information, requests for guidance or clarification, and submission of appeals as specified in § 789.61 will be addressed to the Administrator, Farm Service Agency, Room 4752, Mail Stop 0512, USDA, 1400 Independence Ave. SW., Washington, DC 20250–0512 or email: *FSA.EPD@wdc.usda.gov.* This address is also to be used for requests for adjustments or exceptions to the Farm Service Agency Deputy Administrator for Management as specified in § 789.60.

## SCHEDULE I TO PART 789—APPROVED PROGRAMS AND DELEGATE AGENCIES

The programs listed in this schedule have been approved for priorities and allocations support under this part by the Department of Defense, Department of Energy, or Department of Homeland Security as required by section 202 of Executive Order 13603. They have equal preferential status. USDA has authorized the delegate agencies to use the authorities in this part in support of those programs assigned to them, as indicated below.

| Program identification symbol | Approved program | Authorized delegate agency |
|---|---|---|
| Agriculture programs: | | |
| P1 | Food and food resources (civilian) | USDA, Department of Homeland Security, Federal Emergency Management Agency |
| P2 | Agriculture and food critical infrastructure protection and restoration. | USDA |
| P3 | Food resources (combat rations) | Department of Defense [1] |
| P4 | Certain combined orders (see § 789.17) | USDA |

[1] Department of Defense includes: The Office of the Secretary of Defense, the Military Departments, the Joint Staff, the Combatant Commands, the Defense Agencies, the Defense Field Activities, all other organizational entities in the Department of Defense, and for purpose of this part, the Central Intelligence Agency, and the National Aeronautics and Space Administration as Associated Agencies.

**Val Dolcini,**

*Administrator, Farm Service Agency.*

[FR Doc. 2015–26766 Filed 10–21–15; 8:45 am]

BILLING CODE 3410–05–P

## DEPARTMENT OF AGRICULTURE

## Agricultural Marketing Service

## 7 CFR Part 1220

**[Doc. No. AMS–LPS–15–0016]**

## Soybean Promotion and Research: Amend the Order To Adjust Representation on the United Soybean Board

**AGENCY:** Agricultural Marketing Service, USDA.

**ACTION:** Final rule.

**SUMMARY:** This final rule adjusts the number of members on the United Soybean Board (Board) to reflect changes in production levels that have occurred since the Board was last reapportioned in 2012. As required by the Soybean Promotion, Research, and Consumer Information Act (Act), membership on the Board is reviewed every 3 years and adjustments are made accordingly. This change will result in an increase in Board membership for three States, resulting in an increase in the total number of Board members from 70 to 73. These changes will be reflected in the Soybean Promotion and Research Order (Order) and will be effective for the 2016 appointment process.

**DATES:** *Effective Date:* October 23, 2015.

**FOR FURTHER INFORMATION CONTACT:** James Brow; Research and Promotion Division, Livestock, Poultry, and Seed Program, Agricultural Marketing Service (AMS), USDA, Room 2096–S, STOP 0249, 1400 Independence Avenue SW., Washington, DC 20250–0249, telephone 202–720–0633, fax 202–720–1125, or email: *James.Brow@ams.usda.gov.*

**SUPPLEMENTARY INFORMATION:**

### Executive Order 12866

The Office of Management and Budget has waived the review process required by Executive Order 12866 for this action.

### Executive Order 12988

This final rule was reviewed under Executive Order 12988, Civil Justice Reform. It is not intended to have a retroactive effect. This action would not preempt any State or local laws, regulations, or policies unless they present an irreconcilable conflict with this rule.

The Act provides that administrative proceedings must be exhausted before parties may file suit in court. Under section 1971 of the Act, a person subject to the Order may file a petition with the U.S. Department of Agriculture (USDA) stating that the Order, any provision of the Order, or any obligation imposed in connection with the Order, is not in accordance with the law and request a modification of the Order or an exemption from the Order. The petitioner is afforded the opportunity for a hearing on the petition. After a hearing, USDA would rule on the petition. The Act provides that district courts of the United States in any district in which such person is an inhabitant, or has their principal place of business, has jurisdiction to review USDA's ruling on the petition, if a complaint for this purpose is filed within 20 days after the date of the entry of the ruling.

### Regulatory Flexibility Act

AMS has determined that this rule will not have a significant economic impact on a substantial number of small entities, as defined by the Regulatory Flexibility Act (RFA) (5 U.S.C. 601–612), because it only adjusts representation on the Board to reflect changes in production levels that have occurred since the Board was last reapportioned in 2012. The purpose of the RFA is to fit regulatory actions to the scale of businesses subject to such actions so that small businesses will not be disproportionately burdened. As such, these changes will not impose a significant impact on persons subject to the program.

There are an estimated 569,998 soybean producers and an estimated 10,000 first purchasers who collect the assessment, most of whom would be considered small businesses under the criteria established by the Small Business Administration (SBA) [13 CFR 121.201]. SBA defines small agricultural producers as those having annual receipts of less than $750,000.

### Paperwork Reduction Act

In accordance with the Paperwork Reduction Act of 1995 (44 U.S.C. Chapter 35), the reporting and recordkeeping requirements included in 7 CFR part 1220 were previously approved by OMB and were assigned control number 0581–0093.

### Background and Proposed Changes

The Act (7 U.S.C. 6301–6311) provides for the establishment of a coordinated program of promotion and research designed to strengthen the soybean industry's position in the marketplace, and to maintain and expand domestic and foreign markets and uses for soybeans and soybean products. The program is financed by an assessment of 0.5 percent of the net market price of soybeans sold by producers. Pursuant to the Act, an Order was made effective July 9, 1991. The Order established an initial Board with 60 members. For purposes of establishing the Board, the United States was divided into 31 States and geographical units. Representation on the Board from each unit was determined by the level of production in each unit. The initial Board was appointed on July 11, 1991. The Board is comprised of soybean producers.

Section 1220.201(c) of the Order provides that at the end of each 3-year period, the Board shall review soybean production levels in the geographic units throughout the United States. The Board may recommend to the Secretary of Agriculture (Secretary) modification in the levels of production necessary for Board membership for each unit.

Section 1220.201(d) of the Order provides that at the end of each 3-year

period, the Secretary must review the volume of production of each unit and adjust the boundaries of any unit and the number of Board members from each such unit as necessary to conform with the criteria set forth in § 1220.201(e): (1) To the extent practicable, States with annual average soybean production of less than 3,000,000 bushels shall be grouped into geographically contiguous units, each of which has a combined production level equal to or greater than 3,000,000 bushels, and each such group shall be entitled to at least one member on the Board; (2) units with at least 3,000,000 bushels, but fewer than 15,000,000 bushels shall be entitled to one board member; (3) units with 15,000,000 bushels or more but fewer than 70,000,000 bushels shall be entitled to two Board members; (4) units with 70,000,000 bushels or more but fewer than 200,000,000 bushels shall be entitled to three Board members; and (5) units with 200,000,000 bushels or more shall be entitled to four Board members.

The Board was last reapportioned in 2012. The total Board membership increased from 69 to 70 members, with Mississippi gaining one additional member. The final rule was published in the **Federal Register** (74 FR 27467) on January 2, 2013. This change was effective with the 2013 appointments.

Currently, the Board has 70 members representing 31 geographical units. This membership is based on average production levels for the years 2007–2011 (excluding crops in years that production was the highest and production was the lowest) as reported by USDA's National Agricultural Statistics Service (NASS).

This final rule increases total membership on the Board from 70 to 73. Production data for the years 2010–2014 (excluding the crops in years in which production was the highest and in which production was the lowest) was gathered from NASS. This change will not affect the number of geographical units. The NASS information combines the production from the Western and Eastern Regions into one production data without distinguishing between the two regions. The NASS data does not support a change in membership for either region. As such, this final rule will leave the membership of both regions unchanged with one member each.

This final rule adjusts representation on the Board as follows:

| State | Current representation | New representation |
|---|---|---|
| Missouri | 3 | 4 |
| New Jersey | 0 | 1 |
| Wisconsin | 2 | 3 |

Board adjustments will become effective with the 2016 appointment process.

**Comments**

A proposed rule was published in the **Federal Register** (80 FR 34325) on June 16, 2015, with a 60-day comment period. USDA received no comments.

During the drafting of this final rule, AMS found a typographical error in the table titled ''§ 1220.201 Membership of board'' as presented in the proposed rule. The table showed the State of Georgia with two representatives on the Board. Based on production, Georgia is currently entitled to one member. As a result, AMS has corrected the table in this final rule to reflect Georgia with one member rather than two. This correction does not impact the makeup of the Board or this reapportionment.

**List of Subjects in 7 CFR Part 1220**

Administrative practice and procedure, Advertising, Agricultural research, Marketing agreements, Soybeans and soybean products, Reporting and recordkeeping requirements.

For the reasons set forth in the preamble, Title 7, part 1220 is amended as follows:

## PART 1220—SOYBEAN PROMOTION, RESEARCH, AND CONSUMER INFORMATION

■ 1. The authority citation for 7 CFR part 1220 continues to read as follows:

**Authority:** 7 U.S.C. 6301–6311 and 7 U.S.C. 7401.

■ 2. In § 1220.201, the table immediately following paragraph (a) is revised to read as follows:

**§ 1220.201 Membership of Board.**

* * * * *

| Unit | Number of members |
|---|---|
| Illinois | 4 |
| Iowa | 4 |
| Minnesota | 4 |
| Indiana | 4 |
| Nebraska | 4 |
| Ohio | 4 |
| Missouri | 4 |
| Arkansas | 3 |
| South Dakota | 3 |
| Kansas | 3 |
| Michigan | 3 |
| North Dakota | 3 |
| Mississippi | 3 |
| Wisconsin | 3 |
| Louisiana | 2 |
| Tennessee | 2 |
| North Carolina | 2 |
| Kentucky | 2 |
| Pennsylvania | 2 |
| Virginia | 2 |
| Maryland | 2 |
| Georgia | 1 |
| South Carolina | 1 |
| Alabama | 1 |
| Delaware | 1 |
| Texas | 1 |
| Oklahoma | 1 |
| New York | 1 |
| New Jersey | 1 |
| Eastern Region (Massachusetts, Connecticut, Florida, Rhode Island, Vermont, New Hampshire, Maine, West Virginia, District of Columbia, and Puerto Rico | 1 |
| Western Region (Montana, Wyoming, Colorado, New Mexico, Idaho, Utah, Arizona, Washington, Oregon, Nevada, California, Hawaii, and Alaska) | 1 |

* * * * *

Dated: October 19, 2015

**Rex A. Barnes,**

*Associate Administrator.*

[FR Doc. 2015–26952 Filed 10–21–15; 8:45 am]

BILLING CODE 3410–02–P

**DEPARTMENT OF HOMELAND SECURITY**

**8 CFR Part 214**

**[CIS No. 2565–15; DHS Docket No. USCIS–2012–0010]**

**RIN 1615–ZB43**

## Commonwealth of the Northern Mariana Islands (CNMI)-Only Transitional Worker Numerical Limitation for Fiscal Year 2016

**AGENCY:** U.S. Citizenship and Immigration Services, DHS.

**ACTION:** Notification of numerical limitation.

**SUMMARY:** The Secretary of Homeland Security announces that the annual fiscal year numerical limitation for the Commonwealth of the Northern Mariana Islands (CNMI)-Only Transitional Worker (CW–1) nonimmigrant classification for fiscal year (FY) 2016 (Oct. 1, 2015–Sept. 30, 2016) is set at 12,999. This document announces the mandated annual reduction of the CW–1 numerical limitation and provides the public with additional information regarding the new CW–1 numerical limit. This docuemnt ensures that CNMI employers and employees have sufficient information regarding the maximum number of foreign workers who may be granted CW–1 transitional worker status during FY 2016.

**DATES:** *Effective Date:* October 22, 2015.

**FOR FURTHER INFORMATION CONTACT:** Paola Rodriguez Hale, Adjudications Officer (Policy), Office of Policy and Strategy, U.S. Citizenship and Immigration Services, Department of Homeland Security, 20 Massachusetts Avenue NW., Washington, DC 20529–2060. Contact telephone (202) 272–1470.

**SUPPLEMENTARY INFORMATION:**

### I. Background

Title VII of the Consolidated Natural Resources Act of 2008 (CNRA) extended U.S. immigration law to the CNMI and provided CNMI-specific provisions affecting foreign workers. *See* Pub. L. 110–229, 122 Stat. 754, 853–854. The CNRA provided for a ''transition period'' to phase-out the CNMI's nonresident contract worker program and phase-in the U.S. federal immigration system in a manner that minimizes adverse economic and fiscal effects and maximizes the CNMI's potential for future economic and business growth. *See* sections 701(b) and 702(a) of the CNRA.

The CNRA authorized the Department of Homeland Security (DHS) to create a nonimmigrant classification that would ensure adequate employment in the CNMI during the transition period. *See* section 702(a) of the CNRA; 48 U.S.C. 1806(d). DHS published a final rule on September 7, 2011, amending the regulations at 8 CFR 214.2(w) to implement a temporary, CNMI-only transitional worker nonimmigrant classification (CW classification, which includes CW–1 for principal workers and CW–2 for spouses and minor children). *See Commonwealth of the Northern Mariana Islands Transitional Worker Classification,* 76 FR 55502 (Sept. 7, 2011).

The CNRA mandates an annual reduction in the allocation of the number of permits issued per year and the total elimination of the CW nonimmigrant classification by December 31, 2019. *See* section 702(d)(2) of the CNRA, as amended by the Consolidated And Further Continuing Appropriations Act, 2015, Pub. L. 113–235, § 10, 128 Stat. 2130, 2134 (Dec. 16, 2014); 48 U.S.C. 1806(d)(2). At the outset of the transitional worker program, DHS set the CW–1 numerical limitation for FY 2011 at 22,417 and for FY 2012 at 22,416. DHS announced these annual numerical limitations in DHS regulations at 8 CFR 214.2(w)(1)(viii)(A) and (B).

DHS subsequently opted to publish any future annual numerical limitations by **Federal Register** notice. *See* 8 CFR 214.2(w)(1)(viii)(C). Instead of developing a numerical limit reduction plan, DHS determined that it would instead assess the CNMI's workforce needs on a yearly basis during the transition period. *Id.* This approach to the allocation system ensured that CNMI employers had an adequate supply of workers to better facilitate a smooth transition into the federal immigration system. It also provided DHS with the flexibility to adjust to the future needs of the CNMI economy and to assess the total foreign workforce needs based on the number of requests for transitional worker nonimmigrant classification received following implementation of the CW–1 program.

DHS followed this same rationale for the FY 2013 and FY 2014 fiscal year numerical limitations. After assessing all workforce needs, including the opportunity for economic growth, DHS set the CW–1 numerical limitation at 15,000 and 14,000 respectively for FY 2013 and FY 2014. *See CNMI-Only Transitional Worker Numerical Limitation for Fiscal Year 2013,* 77 FR 71287 (Nov. 30, 2012) and *CNMI-Only Transitional Worker Numerical Limitation for Fiscal Year 2014,* 78 FR 58867 (Sept. 25, 2013). The FY 2013 and FY 2014 numerical limitations were based on the actual demonstrated need for foreign workers within the CNMI during FY 2012. *See* 77 FR 71287, 78 FR 58867.

The CNRA directed that the U.S. Secretary of Labor determine whether an extension of the CW program for an additional period of up to 5 years is necessary to ensure that an adequate number of workers will be available for legitimate businesses in the CNMI, and further provided the Secretary of Labor with the authority to provide for such an extension through notice in the **Federal Register**. *See* 48 U.S.C. 1806(d)(5). On June 3, 2014, the Secretary of Labor extended the CW program for an additional 5 years, through December 31, 2019. *See Secretary of Labor Extends the Transition Period of the Commonwealth of the Northern Mariana Islands-Only Transitional Worker Program,* 79 FR 31988 (June 3, 2014).

The FY 2015 numerical limitation was based on a number of factors, including:

- The Department of Labor's extension of the CW program;
- The CNMI's labor market needs; and
- The CNRA's mandate to annually reduce the number of transitional workers until the end of the extended transitional worker program. *See CNMI-Only Transitional Worker Numerical Limitation for Fiscal Year 2015,* 79 FR 58241 (Sept. 29, 2014).

Since the Secretary of Labor significantly extended the CW program at least until December 31, 2019, DHS decided to preserve the status quo, or current conditions, rather than aggressively reduce CW–1 numbers for FY 2015. DHS therefore reduced the numerical limitation nominally by one, resulting in an FY 2015 limit of 13,999. *See id.*

On December 16, 2014, Congress amended the CNRA to extend the transition period until December 31, 2019. *See* Consolidated and Further Continuing Appropriations Act of 2015, Public Law 113–235, § 10, 128 Stat. 2130, 2134 (amending 48 U.S.C. 1806(d)). Congress also eliminated the Secretary of Labor's authority to provide for future extensions of the CW–1 program, requiring the CW–1 program to end (or sunset) on December 31, 2019. *See id.*

### II. Maximum Number of CW–1 Nonimmigrant Workers for Fiscal Year 2016

The CNRA requires an annual reduction in the number of transitional

workers but does not mandate a specific reduction. *See* 48 U.S.C. 1806(d)(2). In addition, DHS regulations provide that the numerical limitation for any fiscal year will be less than the number established for the previous fiscal year, and that it will be reasonably calculated to reduce the number of CW–1 nonimmigrant workers to zero by the end of the program. 8 CFR 214.2(w)(1)(viii)(C). DHS may adjust the numerical limitation at any time by publishing a notice in the **Federal Register**, but may only reduce the figure. *See* 8 CFR 214.2(w)(1)(viii)(D).

To comply with these requirements, meet the CNMI's labor market's needs, provide opportunity for growth, and preserve access to foreign labor, DHS has set the numerical limitation for FY 2016 at 12,999. DHS arrived at this figure by taking the number of CW–1 nonimmigrant workers needed based on the FY 2015 limitation of 13,999, and then moderately reducing it by 1,000 or approximately 7.2 percent. The new number will accommodate continued economic growth within the CNMI that might result in a need for additional CW–1 nonimmigrant workers during FY 2016. Therefore, CNMI businesses can continue to hire CW–1 workers to meet their current and future need for foreign workers.

In setting this new numerical limitation for FY 2016, DHS considered its effect in conjunction with the published media reports indicating that the CNMI economy continues to grow [1] and that any reduction in the number of CW–1 workers available will have to account for new investments and the expansion of existing businesses in order to support such economic growth.[2]

For the aforementioned reasons, DHS recognizes that any numerical limitation must account for the fact that the CNMI economy continues to be based on a workforce composed primarily of foreign workers. Therefore, any new fiscal year numerical limit should allow for economic growth until the end of the transitional worker program, which is now December 31, 2019. DHS must reduce the annual numerical limitation as statutorily mandated, but also should ensure that there are enough CW–1 workers for future fiscal years until the end of the program.

As noted previously, Congress has mandated that the transition period end on December 31, 2019, without the possibility of an administrative extension of the CW program. *See* 48 U.S.C. 1806(a), (d). Given this firm sunset date and the CNRA's requirement to reduce the number of transitional workers to zero by the end of the transition period, DHS believes that a prudent approach to the numerical limit for the next fiscal year is to institute a meaningful but moderate reduction in the numerical limitation. As such, DHS believes that a reduction of 1,000 is appropriate for FY 2016. This new baseline preserves access to foreign labor within the CNMI and provides a cushion for demand growth, yet provides a meaningful reduction that aids DHS in the implementation of the mandated cap reductions to zero over the transition period. Accordingly, DHS is reducing the number of transitional workers from the current fiscal year numerical limitation of 13,999, and establishing the maximum number of persons who may be granted CW–1 nonimmigrant status in FY 2016 at 12,999.

The FY 2016 numerical limitation for CW–1 nonimmigrant workers will be in effect beginning on October 1, 2015. DHS still retains the ability to adjust the numerical limitation for a fiscal year or other period, in its discretion, at any time by notice in the **Federal Register.** *See* 8 CFR 214.2(w)(1)(viii)(C) and (D). Consistent with the rules applicable to other nonimmigrant worker visa classifications, if the numerical limitation for the fiscal year is not reached, the unused numbers do not carry over to the next fiscal year. *See* 8 CFR 214.2(w)(1)(viii)(E).

Generally, each CW–1 nonimmigrant worker with an approved employment start date that falls within FY 2016 [3] will be counted against the new numerical limitation of 12,999. Counting each CW–1 nonimmigrant worker in this manner will help ensure that U.S. Citizenship and Immigration Services does not approve requests for more than 12,999 CW–1 nonimmigrant workers.

This document does not affect the current immigration status of foreign workers who have CW–1 nonimmigrant status. Foreign workers, however, will be affected by this document when their CNMI employers file:

- For an extension of their CW–1 nonimmigrant classification, or
- A change of status from another nonimmigrant status to that of CW–1 nonimmigrant status.

This document does not affect the status of any individual currently holding CW–2 nonimmigrant status as the spouse or minor child of a CW–1 nonimmigrant worker. This document also does not directly affect the ability of any individual to extend or otherwise obtain CW–2 status, as the numerical limitation applies to CW–1 principals only. This document, however, may indirectly affect individuals seeking CW–2 status since their status depends on the CW–1 principal's ability to obtain or retain CW–1 status.

**Jeh Charles Johnson,**

*Secretary.*

[FR Doc. 2015–26963 Filed 10–21–15; 8:45 am]

**BILLING CODE 9111–97–P**

[1] *See* Cherrie Anne E. Villahermosa, *CNMI Sustaining Economic Growth Momentum,* Marianas Variety, June 30, 2015, *available at http://pidp.eastwestcenter.org/pireport/2015/June/06-30-19.htm.*

[2] *See* Raquel C. Bagnol, *Labor Chief Says CW Allocation Needs to be Revisited,* Marianas Variety, June 17, 2015, *available at http://www.mvariety.com/cnmi/cnmi-news/local/77978-labor-chief-says-cw-allocation-needs-to-be-revisited.*

[3] FY 2016 refers to the period between October 1, 2015, and September 30, 2016.

## DEPARTMENT OF TRANSPORTATION

### Office of the Secretary

### Federal Aviation Administration

### 14 CFR Chapter I

**[Docket No. FAA–2015–4378]**

## Clarification of the Applicability of Aircraft Registration Requirements for Unmanned Aircraft Systems (UAS) and Request for Information Regarding Electronic Registration for UAS

**AGENCY:** Department of Transportation and Federal Aviation Administration.

**ACTION:** Clarification and request for information.

**SUMMARY:** This document clarifies the applicability of the statutory requirements regarding aircraft registration to UAS, including those operating as model aircraft. In addition, the DOT announces the formation of a UAS registration task force to explore and develop recommendations to streamline the registration process for UAS to ease the burden associated with the existing aircraft registration process. This document requests information and recommendations regarding what information and registration platform would be appropriate for UAS registration and ways to minimize the burden to the regulated community. In addition, we request comment on which UAS, based on their weight or performance capabilities, warrant a continued exercise of discretion with respect to requiring registration because of the negligible risk they pose to the national airspace system (NAS).

**DATES:** This clarification goes into effect October 22, 2015. To assist the task force in developing its recommendations, the Department

requests that comments in response to the request for information be submitted to docket FAA–2015–4378 at *www.regulations.gov,* by November 6, 2015.

The docket will remain open after this time and the Department will consider all comments received in developing a registration process.

**ADDRESSES:** You may submit comments by any of the following methods:

- *Federal Rulemaking Portal: http://www.regulations.gov.* Follow the instructions for submitting comments.
- *Fax:* 202–493–2251.
- *Mail:* Dockets Management System; U.S. Department of Transportation, Dockets Operations, M–30, Ground Floor, Room W12–140, 1200 New Jersey Avenue SE., Washington, DC 20590–0001.
- *Hand Delivery:* To U.S. Department of Transportation, Dockets Operations, M–30, Ground Floor, Room W12–140, 1200 New Jersey Avenue SE., Washington, DC 20590–0001, between 9:00 a.m. and 5:00 p.m., Monday through Friday, except Federal holidays. Instructions: Include the agency name and docket number FAA–2015–4378 for this document at the beginning of your comment. Note that all comments received will be posted without change to *http://www.regulations.gov* including any personal information provided. If sent by mail, comments must be submitted in duplicate. Persons wishing to receive confirmation of receipt of their comments must include a self-addressed stamped postcard.

*Privacy Act:* Anyone is able to search the electronic form of any written communications and comments received into any of our dockets by the name of the individual submitting the document (or signing the document, if submitted on behalf of an association, business, labor union, etc.). You may review DOT's complete Privacy Act Statement at *http://www.dot.gov/privacy.*

*Docket:* You may view the public docket through the Internet at *http://www.regulations.gov* or in person at the Docket Operations office at the above address (See **ADDRESSES**).

**FOR FURTHER INFORMATION CONTACT:** Questions regarding this document may be directed to Earl Lawrence, Director, FAA UAS Integration Office, 800 Independence Ave. SW., Washington DC 20591; phone: (202) 267–6556; email: *UASRegistration@faa.gov.*

**SUPPLEMENTARY INFORMATION:**

## Background

In the FAA Modernization and Reform Act of 2012 (Pub. L. 112–95) (the Act), Congress mandated that the DOT, in consultation with other government partners and industry stakeholders, develop a comprehensive plan to safely accelerate the integration of civil UAS in the NAS. Since 2012, the Department has made progress in enabling UAS operations, through issuing exemptions under section 333 of the Act to permit commercial operations; creating a UAS test site program to encourage further research and testing of UAS operations in real-world environments; issuing a notice of proposed rulemaking, Operation and Certification of Small Unmanned Aircraft Systems (RIN 2120–AJ60) (small UAS NPRM), that sets forth a framework for integrating small UAS operations in the NAS; and developing a Pathfinder program to encourage research and innovation that will enable advanced UAS operations.

A foundational statutory and regulatory requirement that the Department has employed for each of these integration programs is aircraft registration and marking. In order to operate in the NAS, the Department must ensure that operators are not only aware of the system in which they are operating, but that we also have a means to identify and track the UAS to its operator. One means to accomplish this is through aircraft registration and marking. To date, UAS operators that the Department has authorized have been required to register their UAS through the FAA's existing paper-based registration process under 14 CFR part 47. As an exercise of discretion, historically we have not required model aircraft to be registered under this system.

UAS hold enormous promise for our economy and for the aviation industry. But for the industry to develop to its full potential, we have to ensure that it develops safely. Over the past several months, we have received increasing reports of unauthorized and unsafe use of small UAS. Pilot reports of UAS sightings in 2015 are double the rate of 2014. Pilots have reported seeing drones at altitudes up to 10,000 feet, or as close as half-a-mile from the approach end of a runway. In recent weeks, the presence of multiple UAS in the vicinity of wild fires in the western part of the country prompted firefighters to ground their aircraft on several occasions. These UAS operations are unsafe and illegal. However, only a small percentage of these incidents have resulted in enforcement actions against individuals for unsafe or unauthorized UAS operation because identifying an individual or entity responsible for the dangerous operation of UAS is very difficult. This situation is troubling to the unmanned aircraft industry, to responsible model aircraft users, and to users of the NAS, all of whom always put safety first.

The risk of unsafe operations will only increase as more UAS enter the NAS. Some retailers have projected huge holiday sales. We are committed to ensuring that the U.S. continues to lead the world in the development and implementation of aviation technology, and in doing so, that we create a space for the creativity, innovation and exploration that will drive this industry forward in the years and decades ahead. At the same time, we must create a culture of accountability and responsibility among all UAS operators. To maintain safety in the NAS, the Department has reconsidered its past practice of exercising discretion with respect to requiring UAS to be registered, consistent with statutory requirements of 49 U.S.C. 44101–44103, and has determined that registration of all UAS is necessary to enforce personal accountability while operating an aircraft in our skies.

Federal law requires that a person may only operate an aircraft when it is registered with the FAA. 49 U.S.C. 44101(a).[1] ''Aircraft'' is defined as ''any contrivance invented, used, or designed to navigate, or fly in, the air.'' [2] 49 U.S.C. 40102(a)(6). In 2012, Congress confirmed that UAS, including those used for recreation or hobby purposes, are aircraft consistent with the statutory definition set forth in 49 U.S.C. 40102(a)(6). *See* Public Law 112–95, sec. 331(8), 336 (defining an unmanned aircraft as ''an aircraft that is that is operated without the possibility of direct human intervention from within or on the aircraft,'' and model aircraft as ''an unmanned aircraft that is capable of sustained flight in the atmosphere, flown within visual line of sight of the person operating the aircraft, and flown for hobby or recreational purposes''); *see also Administrator* v. *Pirker,* NTSB Order No. EA–5730, at 12 (Nov. 17, 2014) (affirming that the statutory definition of aircraft is clear and unambiguous and ''includes any air aircraft, manned or unmanned, large or small.''). Because UAS, including model aircraft, are aircraft, they are subject to FAA regulation, including the statutory

[1] The FAA is charged with registering and issuing a certificate of registration to the owner of an aircraft that meets the requirements of 49 U.S.C. 44102. *See* 49 U.S.C. 44102–03. These statutory requirements are augmented by regulations in part 47 of title 14, Code of Federal Regulations.

[2] Similarly, FAA regulations define ''aircraft'' as ''a device that is used or intended to be used for flight in the air.'' 14 CFR 1.1.

requirements regarding registration set forth in 49 U.S.C. 44101(a), and further prescribed in regulation at 14 CFR part 47.

Historically, the FAA, through the exercise of its discretion, has not enforced the statutory requirements for aircraft registration in 49 U.S.C. 44101 for model aircraft. As evidenced by the recent reports of unsafe UAS operations, the lack of awareness of operators regarding what must be done to operate UAS safely in the NAS, and the lack of identification of UAS and their operators pose significant challenges in ensuring accountability for responsible use. Without increased awareness and knowledge of the statutory and regulatory requirements for safe operation, the risk of unsafe UAS operations will only rise. Aircraft identification and marking will assist the Department in identifying owners of UAS that are operated in an unsafe manner, so we may continue to educate these users, and when appropriate, take enforcement action.

Requiring registration of all UAS, including those operated for hobby or recreation, embraces and applies the Academy of Model Aeronautics' (AMA)'s policy of identification to UAS operators who may not be modelers registered with the AMA. Additionally, it would ensure consistency with other UAS operations currently required to be registered, such as public aircraft, those operated under exemptions, and certificated aircraft, as well as those operations contemplated in the small UAS NPRM.

Based on the Department's experience in registering small UAS authorized by exemptions granted under the authority of section 333 of the FAA Modernization and Reform Act of 2012, and the comments received on the proposed registration requirements in the small UAS NPRM, it is apparent that the current paper-based system for aircraft registration is too burdensome for small UAS, to include model aircraft. To facilitate compliance with the statutory obligation for registration, the DOT is currently evaluating options for a streamlined, electronic-based registration system for small UAS. The Department has convened a UAS registration task force, under the FAA's authority in 49 U.S.C. 106(p)(5) to designate aviation rulemaking committees. This task force will provide recommendations on the type of registration platform needed to accommodate small UAS, as well as the information that will need to be provided to register these aircraft. The UAS registration task force also will explore and provide recommendations on whether it is appropriate for the FAA to continue to exercise discretion with respect to requiring registration of certain UAS based on their weight and performance capabilities. The task force will meet and provide its recommendations to the Department by November 20, 2015. To facilitate the task force's work, we are requesting information and data from the public in the following areas:

1. What methods are available for identifying individual products? Does every UAS sold have an individual serial number? Is there another method for identifying individual products sold without serial numbers or those built from kits?

2. At what point should registration occur (*e.g.* point-of-sale or prior-to-operation)? How should transfers of ownership be addressed in registration?

3. If registration occurs at point-of-sale, who should be responsible for submission of the data? What burdens would be placed on vendors of UAS if DOT required registration to occur at point-of-sale? What are the advantages of a point-of-sale approach relative to a prior-to-operation approach?

4. Consistent with past practice of discretion, should certain UAS be excluded from registration based on performance capabilities or other characteristics that could be associated with safety risk, such as weight, speed, altitude operating limitations, duration of flight? If so, please submit information or data to help support the suggestions, and whether any other criteria should be considered.

5. How should a registration process be designed to minimize burdens and best protect innovation and encourage growth in the UAS industry?

6. Should the registration be electronic or web-based? Are there existing tools that could support an electronic registration process?

7. What type of information should be collected during the registration process to positively identify the aircraft owner and aircraft?

8. How should the registration data be stored? Who should have access to the registration data? How should the data be used?

9. Should a registration fee be collected and if so, how will the registration fee be collected if registration occurs at point-of-sale? Are there payment services that can be leveraged to assist (*e.g.* PayPal)?

10. Are there additional means beyond aircraft registration to encourage accountability and responsible use of UAS?

Comments received by November 6, 2015 would be most helpful in assisting the UAS registration task force in developing its recommendations. The comment period will remain open after this period and the Department will consider the comments received, in addition to the UAS registration task force's recommendations, in developing a stream-lined registration process for small UAS, including model aircraft.

Issued in Washington, DC, on October 19, 2015.

**Anthony R. Foxx,**

*Secretary of Transportation.*

**Michael P. Huerta,**

*Administrator of the Federal Aviation Administration.*

[FR Doc. 2015–26874 Filed 10–20–15; 11:15 am]

**BILLING CODE 4910–9X–P**

## DEPARTMENT OF COMMERCE

### National Oceanic and Atmospheric Administration

### 15 CFR Part 950

**[Docket No: 150202106–5879–02]**

**RIN 0648–BE86**

## Schedule of Fees for Access to NOAA Environmental Data, Information, and Related Products and Services

**AGENCY:** National Environmental Satellite, Data and Information Service (NESDIS), National Oceanic and Atmospheric Administration (NOAA), Department of Commerce.

**ACTION:** Final rule.

**SUMMARY:** In this final rule, NESDIS establishes a new schedule of fees for the sale of its data, information, and related products and services to users. NESDIS is revising the fee schedule that has been in effect since 2013 to ensure that the fees accurately reflect the costs of providing access to the environmental data, information, and related products and services. NESDIS is authorized under 15 U.S.C. 1534 to assess fees, up to fair market value, for access to environmental data, information, and products derived from, collected, and/or archived by NOAA. Other than depreciation, costs to upgrade computer hardware and software systems will not be included in the fees charged to users. NESDIS is updating its schedule of fees for access to NOAA Environmental Data, Information, and Related Products and Services as costs of providing access have changed since 2013.

**DATES:** *Effective date:* November 23, 2015.

**FOR FURTHER INFORMATION CONTACT:** James Lewis (301) 713–7073.

**SUPPLEMENTARY INFORMATION:**

## Background

NESDIS operates NOAA's National Center for Environmental Information (NCEI). Through NCEI, NESDIS provides and ensures timely access to global environmental data from satellites and other sources, provides information services, and develops science products.

NESDIS maintains some 1,300 databases containing over 2,400 environmental variables at NCEI and seven World Data Centers. These centers respond to over 2,000,000 requests for these data and products annually from over 70 countries. This collection of environmental data and products is growing rapidly, both in size and sophistication, and as a result the associated costs have increased.

Users have the ability to access the data offline, online and through the NESDIS *e-Commerce System (NeS) online store.* Our ability to provide data, information, products and services depends on user fees.

New Fee Schedule

In this final rule, NESDIS establishes a new schedule of fees for the sale of its data, information, and related products and services to users. NESDIS is revising the fee schedule that has been in effect since 2013 to ensure that the fees accurately reflect the costs of providing access to the environmental data, information, and related products and services. The new fee schedule lists both the current fee charged for each item and the new fee to be charged to users that will take effect beginning November 23, 2015. The schedule applies to the listed services provided by NESDIS on or after this date, except for products and services covered by a subscription agreement in effect as of this date that extends beyond this date. In those cases, the increased fees will apply upon renewal of the subscription agreement or at the earliest amendment date provided by the agreement.

NESDIS will continue to review the user fees periodically, and will revise such fees as necessary. Any future changes in the user fees and their effective date will be announced through notice in the **Federal Register**.

Classification

This rule has been determined to be not significant for purposes of E.O. 12866. The provisions of the Administrative Procedure Act (5 U.S.C. 553) requiring notice of proposed rulemaking and the opportunity for public participation are inapplicable because this rule falls within the public property exception of subparagraph (a)(2) of section 553, as it is limited only to the assessment of fees, per 15 U.S.C. 1534, that accurately reflect the costs of providing access to publicly available environmental data, information, and related products. Further, no other law requires that a notice of proposed rulemaking and an opportunity for public comment be given for this rule. Because a notice of proposed rulemaking and an opportunity for public comment are not required to be given for this rule under 5 U.S.C. 553 or by any other law, the requirements of the Regulatory Flexibility Act (5 U.S.C. 601 *et seq.*) are not applicable. Accordingly, no Regulatory Flexibility Analysis is required and none has been prepared.

**List of Subjects in 15 CFR Part 950**

Organization and functions (Government agencies).

**Cherish Johnson,**

*Chief, Financial Officer (CFO/CAO).*

For the reasons set forth above, 15 CFR part 950 is amended as follows:

## PART 950—ENVIRONMENTAL DATA AND INFORMATION

■ 1. The authority citation for part 950 continues to read as follows:

**Authority:** (5 U.S.C. 552, 553). Reorganization Plan No. 4 of 1970.

■ 2. Appendix A to Part 950 is revised to read as follows:

### Appendix A to Part 950—Schedule of User Fees for Access to NOAA Environmental Data

| Name of product/data/publication/information/service | Current fee | New fee |
|---|---|---|
| NOAA National Center for Environmental Information: | | |
| Department of Commerce Certification | $86.00 | $16.00 |
| General Certification | 72.00 | 92.00 |
| Paper Copy | 2.00 | 3.00 |
| Data Poster | 18.00 | 18.00 |
| Shipping Service | 4.00 | 8.00 |
| Rush Order Fee | 60.00 | 60.00 |
| Super Rush Order Fee | 100.00 | 100.00 |
| Foreign Handling Fee | 67.00 | 43.00 |
| NEXRAD Doppler Radar Color Prints | 14.00 | 21.00 |
| Paper Copy from Electronic Media | 6.00 | 8.00 |
| Offline In-Situ Digital Data | 124.00 | 175.00 |
| Microfilm Copy (roll to paper) per frame from existing film | 14.00 | 20.00 |
| Satellite Image Product | 73.00 | 92.00 |
| Offline Satellite, Radar, and Model Digital Data (average unit size is 1 terabyte) | 615.00 | 753.00 |
| Conventional CD–ROM/DVD | 60.00 | 110.00 |
| Specialized CD–ROM/DVD | 131.00 | 208.00 |
| CD–ROM/DVD Copy, Offline | 30.00 | 43.00 |
| CD–ROM/DVD Copy, Online Store | 15.00 | 16.00 |
| Facsimile Service | 78.00 | 89.00 |
| Order Handling | 8.00 | 11.00 |
| Non-Digital Order Consultation | 6.00 | 10.00 |
| Digital Order Consultation | 18.00 | 28.00 |
| Non-Serial Publications | 27.00 | 32.00 |
| Non-Standard Data; Select/Copy to CD, DVD or Electronic Transfer, Specialized, Offline | 59.00 | 77.00 |
| Digital and Non-Digital Off-the-Shelf Products, Online | 9.00 | 13.00 |
| Digital and Non-Digital Off-the-Shelf Products, Offline | 11.00 | 17.00 |
| Order Consultation Fee | 2.00 | 4.00 |
| Handling and Packing Fee | 8.00 | 12.00 |
| World Ocean Database-World Ocean Atlas 2009 DVDs | 15.00 | * |
| Mini Poster | 1.00 | 2.00 |

| Name of product/data/publication/information/service | Current fee | New fee |
|---|---|---|
| Icosahedron Globe | 1.00 | 1.00 |
| Convert Data to Standard Image | 6.00 | 8.00 |
| Single Orbit OLS & Subset | 18.00 | 19.00 |
| Single Orbit OLS & Subset, Additional Orbits | 5.00 | 6.00 |
| Geolocated Data | 47.00 | 50.00 |
| Subset of Pre-existing Geolocated Data | 28.00 | 32.00 |
| Global Nighttime Lights Annual Composite from One Satellite | 74,032.00 | 74,924.00 |
| Most Recent DMSP–OLS Thermal Band/Cloud Cover Mosaics from Multiple Satellites | 259.00 | * |
| Daily or Nightly Global Mosaics (visible & thermal band, single spectral band or environmental data) | 241.00 | 332.00 |
| Global Nighttime Lights Lunar Cycle | 6,531.00 | 8,259.00 |
| Radiance Calibrated Global DMSP–OLS Nighttime Lights Annual Composite from One Satellite | 82,075.00 | * |
| Research Data Series CD–ROM/DVD | 25.00 | 25.00 |
| Custom Analog Plotter Prints | 60.00 | * |
| NOS Bathymetric Maps and Miscellaneous Archived Publication Inventory | 7.00 | 8.00 |
| Global Annual Composite of Nighttime Lights in Monthly Increments From One Satellite | 8,305.00 | 10,794.00 |
| High Definition Geomagnetic Model | 20,060.00 | 20,262.00 |
| Provision of Global Nighttime VIIRS day/night band data in geotiff format | | 55,727.00 |
| Provision of Global Nighttime VIIRS day/night band data in HDF5 Format | | 27,888.00 |
| Provision of regional data from the VIIRS instrument on a daily basis | | 14,306.00 |

* Reflects a product no longer offered.

[FR Doc. 2015–26850 Filed 10–21–15; 8:45 am]

**BILLING CODE 3510–22–P**

## DEPARTMENT OF HOMELAND SECURITY

## Coast Guard

## 33 CFR Part 100

**[Docket Number USCG–2015–0820]**

**RIN 1625–AA08**

## Special Local Regulation for Battle of Hampton; Hampton River, Hampton, VA

**AGENCY:** Coast Guard, DHS.

**ACTION:** Temporary final rule.

**SUMMARY:** The Coast Guard is establishing a special local regulation on the navigable waters of Hampton River, in the vicinity of the Crowne Plaza Hampton Marina in Hampton, Virginia. This regulated area will restrict vessel movement in the specified area during the revolutionary sea battle re-enactment Battle of Hampton. This action is necessary to provide for the safety of life and property on the surrounding navigable waters during the re-enactment.

**DATES:** This rule is effective from 1 p.m. on October 24 through 1:30 p.m. on October 25, 2015. This rule will only be enforced from 1:00 p.m. to 1:30 p.m. each day.

**ADDRESSES:** To view documents mentioned in this preamble as being available in the docket, go to *http://www.regulations.gov,* type USCG–2015–0820 in the ''SEARCH'' box and click ''SEARCH.'' Click on Open Docket Folder on the line associated with this rule.

**FOR FURTHER INFORMATION CONTACT:** If you have questions on this rule, call or email LCDR Barbara Wilk, Waterways Management Division Chief, Sector Hampton Roads, Coast Guard; 757–668–5580, email *HamptonRoadsWaterway@uscg.mil*.

**SUPPLEMENTARY INFORMATION:**

### I. Table of Abbreviations

CFR Code of Federal Regulations
DHS Department of Homeland Security
E.O. Executive order
FR Federal Register
NPRM Notice of proposed rulemaking
Pub. L. Public Law
§ Section
U.S.C. United States Code

### II. Background Information and Regulatory History

The Coast Guard is issuing this temporary rule without prior notice and opportunity to comment pursuant to authority under section 4(a) of the Administrative Procedure Act (APA) (5 U.S.C. 553(b)). This provision authorizes an agency to issue a rule without prior notice and opportunity to comment when the agency for good cause finds that those procedures are ''impracticable, unnecessary, or contrary to the public interest.'' Under 5 U.S.C. 553(b)(B), the Coast Guard finds that good cause exists for not publishing a notice of proposed rulemaking (NPRM) with respect to this rule due to the short time period between event planners notifying the Coast Guard of details concerning the event, on August 15, 2015, and publication of this special local regulation. As such, it is impracticable for the Coast Guard to provide a full comment period due to lack of time. Furthermore, delaying the effective date of this special local regulation would be contrary to the public interest as immediate action is needed to ensure the safety of the event participants, patrol vessels, spectator craft and other vessels transiting the event area. The Coast Guard will provide advance notifications to users of the affected waterway via marine information broadcasts, local notice to mariners. This same location is used for an annually occurring marine event, Blackbeard Festival, that is regulated under 33 CFR 100.501, Table to § 100.501, section (c) line 1, and includes sea battle re-enactments and fireworks. The organizers wanted to hold an additional revolutionary sea battle re-enactment closer to the anniversary date of the actual historical battle in Hampton, VA. This event will become an annual marine event and will be scheduled to occur on the second to last weekend in October.

We are issuing this rule, and under 5 U.S.C. 553(d)(3), the Coast Guard finds that good cause exists for making it effective less than 30 days after publication in the **Federal Register.** Due to the need for immediate action, the restriction on vessel traffic is necessary to protect life, property, and the environment; therefore, a 30-day notice is impracticable. Delaying the effective date would be contrary to the special local regulation intended objectives of protecting persons and vessels, and enhancing public and maritime safety.

### III. Legal Authority and Need for Rule

On October 24 and October 25, 2015, the Hampton History Museum and City of Hampton Parks and Recreation will sponsor the ''Battle of Hampton'' on the waters of the Hampton River in Hampton, VA. The event will consist of approximately four time-period vessels carrying out a revolutionary sea battle

re-enactment on the waters of the Hampton River. As part of the sea battle re-enactment, participants onboard the vessels will be firing off 18th century cannons and weapons aimed towards the shoreline. To provide for the safety of participants, spectators, support and transiting vessels, the Coast Guard will temporarily restrict vessel traffic in the event area during the sea battle re-enactment. The regulation at 33 CFR 100.501 will be enforced for the duration of the event. Under the provisions of 33 CFR 100.501, from 1 p.m. through 1:30 p.m. on October 24 and October 25, 2015, vessels may not enter the regulated area unless they receive permission from the Coast Guard Patrol Commander.

This special local regulation will restrict vessel movement in the navigable waters of the Hampton River from hazards associated with battle re-enactments. The potential hazards to mariners within the special local regulation include accidental shockwaves, flying debris and loud noises.

## IV. Discussion of the Rule

The Captain of the Port of Hampton Roads will establish a special local regulation on the waters of the Hampton River, near the Crowne Plaza Hampton Marina, bounded by the shoreline and a line drawn from 37°01′30.09″ N./076°20′25.44″ W., to 37°01′29.47″ N./076°20′24.24″ W., to 37° 01′22.93″ N./076°20′30.62″ W., to 37°01′24.47″ N./076°20′31.43″ W. (NAD 1983), in Hampton, Virginia. This regulation will be enforced on October 24 and October 25, 2015 between the hours of 1 p.m. and 1:30 p.m. Access to the regulated area will be restricted during the specified date and time.

Except for vessels authorized by the Captain of the Port or his Representative, no person or vessel may enter or remain in the regulated area during the time frame listed. The COTP will give notice of the enforcement of the regulated area by all appropriate means to provide the widest dissemination of notice among the affected segments of the public. This will include publication in the Local Notice to Mariners and Marine Information Broadcasts.

## V. Regulatory Analyses

We developed this rule after considering numerous statutes and executive orders (E.O.s) related to rulemaking. Below we summarize our analyses based on a number of these statutes and E.O.s, and we discuss First Amendment rights of protestors.

### *A. Regulatory Planning and Review*

E.O.s 12866 and 13563 direct agencies to assess the costs and benefits of available regulatory alternatives and, if regulation is necessary, to select regulatory approaches that maximize net benefits. E.O. 13563 emphasizes the importance of quantifying both costs and benefits, of reducing costs, of harmonizing rules, and of promoting flexibility. This rule has not been designated a ''significant regulatory action,'' under E.O. 12866. Accordingly, it has not been reviewed by the Office of Management and Budget.

This regulatory action determination is based on the size, location, duration, and time-of-year of the restricted area. Although this regulation restricts access to the regulated area, the effect of this rule will not be significant because: (i) This rule will only be enforced for the limited size and duration of the event; and (ii) the Coast Guard will make extensive notification to the maritime community via marine information broadcasts so mariners may adjust their plans accordingly.

### *B. Impact on Small Entities*

The Regulatory Flexibility Act of 1980, 5 U.S.C. 601–612, as amended, requires Federal agencies to consider the potential impact of regulations on small entities during rulemaking. The term ''small entities'' comprises small businesses, not-for-profit organizations that are independently owned and operated and are not dominant in their fields, and governmental jurisdictions with populations of less than 50,000. The Coast Guard certifies under 5 U.S.C. 605(b) that this rule will not have a significant economic impact on a substantial number of small entities.

This rule affects the following entities, some of which might be small entities: the owners or operators of vessels intending to transit or anchor in waters of the Hampton River, during the enforcement period.

This regulated area will not have a significant economic impact on a substantial number of small entities for the following reasons: (i) it will only be in effect for a limited duration, and (ii) before the enforcement period, Sector Hampton Roads will issue maritime advisories widely available to users of the Hampton River, allowing mariners to adjust their plans accordingly.

Under section 213(a) of the Small Business Regulatory Enforcement Fairness Act of 1996 (Pub. L. 104–121), we want to assist small entities in understanding this rule. If the rule would affect your small business, organization, or governmental jurisdiction and you have questions concerning its provisions or options for compliance, please contact the person listed in the **FOR FURTHER INFORMATION CONTACT** section.

Small businesses may send comments on the actions of Federal employees who enforce, or otherwise determine compliance with, Federal regulations to the Small Business and Agriculture Regulatory Enforcement Ombudsman and the Regional Small Business Regulatory Fairness Boards. The Ombudsman evaluates these actions annually and rates each agency's responsiveness to small business. If you wish to comment on actions by employees of the Coast Guard, call 1–888–REG–FAIR (1–888–734–3247). The Coast Guard will not retaliate against small entities that question or complain about this rule or any policy or action of the Coast Guard.

### *C. Collection of Information*

This rule will not call for a new collection of information under the Paperwork Reduction Act of 1995 (44 U.S.C. 3501–3520).

### *D. Federalism and Indian Tribal Governments*

A rule has implications for federalism under E.O. 13132, Federalism, if it has a substantial direct effect on the States, on the relationship between the national government and the States, or on the distribution of power and responsibilities among the various levels of government. We have analyzed this rule under that Order and have determined that it is consistent with the fundamental federalism principles and preemption requirements described in E.O. 13132.

Also, this rule does not have tribal implications under E.O. 13175, Consultation and Coordination with Indian Tribal Governments, because it does not have a substantial direct effect on one or more Indian tribes, on the relationship between the Federal Government and Indian tribes, or on the distribution of power and responsibilities between the Federal Government and Indian tribes. If you believe this rule has implications for federalism or Indian tribes, please contact the person listed in the **FOR FURTHER INFORMATION CONTACT** section above.

### *E. Unfunded Mandates Reform Act*

The Unfunded Mandates Reform Act of 1995 (2 U.S.C. 1531–1538) requires Federal agencies to assess the effects of their discretionary regulatory actions. In particular, the Act addresses actions that may result in the expenditure by a

State, local, or tribal government, in the aggregate, or by the private sector of $100,000,000 (adjusted for inflation) or more in any one year. Though this rule will not result in such an expenditure, we do discuss the effects of this rule elsewhere in this preamble.

*F. Environment*

We have analyzed this rule under Department of Homeland Security Management Directive 023–01 and Commandant Instruction M16475.lD, which guide the Coast Guard in complying with the National Environmental Policy Act of 1969 (42 U.S.C. 4321–4370f), and have determined that this action is one of a category of actions that do not individually or cumulatively have a significant effect on the human environment. This rule involves implementation of regulations within 33 CFR part 100 that apply to organized marine events on the navigable waters of the United States that may have potential for negative impact on the safety or other interest of waterway users and shore side activities in the event area. The category of water activities includes but is not limited to sailboat regattas, boat parades, power boat racing, swimming events, crew racing, canoe and sailboard racing. It is categorically excluded from further review under paragraph 34(h) of Figure 2–1 of the Commandant Instruction. An environmental analysis checklist supporting this determination and a Categorical Exclusion Determination are available in the docket where indicated under **ADDRESSES**. We seek any comments or information that may lead to the discovery of a significant environmental impact from this rule.

*G. Protest Activities*

The Coast Guard respects the First Amendment rights of protesters. Protesters are asked to contact the person listed in the **FOR FURTHER INFORMATION CONTACT** section to coordinate protest activities so that your message can be received without jeopardizing the safety or security of people, places or vessels.

**List of Subjects in 33 CFR Part 100**

Marine safety, Navigation (water), Reporting and recordkeeping requirements, Waterways.

For the reasons discussed in the preamble, the Coast Guard amends 33 CFR part 100 as follows:

## PART 100—SAFETY OF LIFE ON NAVIGABLE WATERS

■ 1. The authority citation for part 100 continues to read as follows:

**Authority:** 33 U.S.C. 1233.

■ 2. In § 100.501, in the Table to § 100.501, under ''(c.) Coast Guard Sector Hampton Roads—COTP Zone,'' add entry 10, effective from 1 p.m. on October 24 through 1:30 p.m. on October 25, 2015, to read as follows:

**§ 100.501 Special Local Regulations; Marine Events in the Fifth Coast Guard District.**

* * * * *

TABLE TO § 100.501

| No. | Date | Event | Sponsor | Location |
|---|---|---|---|---|
| * | * | * | * | * |
| **(c.) Coast Guard Sector Hampton Roads—COTP Zone** | | | | |
| * | * | * | * | * |
| 10 ..... | October-second to last weekend. | Hampton Roads ... | Hampton History Museum and City of Hampton Parks and Recreation. | Regulated area includes all waters of the Hampton River, near the Crowne Plaza Hampton Marina, bounded by the shoreline and a line drawn from 37°01′30.09″ N./076°20′25.44″ W., to 37°01′29.47″ N./076°20′24.24″ W., to 37°01′22.93″ N./076°−20′−30.62″ W., to 37°01′24.47″ N./076°20′31.43″ W. (NAD 1983), in Hampton, Virginia. |
| * | * | * | * | * |

Dated: October 13, 2015.

**Christopher S. Keane,**

*Captain, U.S. Coast Guard, Captain of the Port Hampton Roads.*

[FR Doc. 2015–26962 Filed 10–21–15; 8:45 am]

**BILLING CODE 9110–04–P**

## DEPARTMENT OF HOMELAND SECURITY

## Coast Guard

## 33 CFR Part 117

**[Docket No. USCG–2015–0952]**

## Drawbridge Operation Regulation; English Kills, Brooklyn, NY

**AGENCY:** Coast Guard, DHS.

**ACTION:** Notice of deviation from drawbridge regulation.

**SUMMARY:** The Coast Guard has issued a temporary deviation from the operating schedule that governs the Metropolitan Ave. Bridge across the English Kills, mile 3.4, at Brooklyn, New York. This deviation is necessary to perform operating machinery installation. This deviation allows the bridge to remain in the closed position for approximately 3 days.

**DATES:** This deviation is effective from 6 a.m. on November 2, 2015 to 5 p.m. on November 5, 2015.

**ADDRESSES:** The docket for this deviation, [USCG–2015–0952] is available at *http://www.regulations.gov.*

**FOR FURTHER INFORMATION CONTACT:** If you have questions on this temporary deviation, call or email Ms. Judy K. Leung-Yee, Project Officer, First Coast Guard District, telephone (212) 514–4330, email *judy.k.leung-yee@uscg.mil.*

**SUPPLEMENTARY INFORMATION:** The Metropolitan Ave. Bridge, mile 3.4, across the English Kills has a vertical clearance in the closed position of 10 feet at mean high water and 15 feet at mean low water. The existing bridge operating regulations are found at 33 CFR 117.801(e).

The waterway has one commercial facility located upstream of the bridge.

New York City DOT requested this temporary deviation from the normal

operating schedule to perform operating machinery installation.

Under this temporary deviation, the Metropolitan Ave. Bridge may remain in the closed position from 6 a.m. on November 2, 2015 through 5 p.m. on November 5, 2015.

Vessels able to pass through the bridge in the closed positions may do so at any time. The bridge will not be able to open for emergencies and there is no immediate alternate route for vessel to pass.

The Coast Guard will also inform the users of the waterways through our Local and Broadcast Notice to Mariners of the change in operating schedule for the bridge so that vessels can arrange their transits to minimize any impact caused by the temporary deviation.

In accordance with 33 CFR 117.35(e), the drawbridge must return to its regular operating schedule immediately at the end of the effective period of this temporary deviation. This deviation from the operating regulations is authorized under 33 CFR 117.35.

Dated: October 8, 2015.

**C.J. Bisignano,**

*Supervisory Bridge Management Specialist, First Coast Guard District.*

[FR Doc. 2015–26957 Filed 10–21–15; 8:45 am]

**BILLING CODE 9110–04–P**

---

## DEPARTMENT OF HOMELAND SECURITY

## Coast Guard

## 33 CFR Part 117

**[Docket No. USCG–2015–0967]**

## Drawbridge Operation Regulation; Willamette River, Portland, OR

**AGENCY:** Coast Guard, DHS.

**ACTION:** Notice of temporary deviation from regulations.

**SUMMARY:** The Coast Guard has issued a temporary deviation from the operating schedule that governs the Hawthorne Bridge, mile 13.1, across the Willamette River at Portland, OR. The deviation is necessary for maintenance repairs to the bridge lifting mechanism. This deviation allows the bridges to remain in the closed-to-navigation position to allow safe and timely movement of workers.

**DATES:** This deviation is effective from 5 a.m. to 5 p.m. on November 15, 2015.

**ADDRESSES:** The docket for this deviation, [USCG–2015–0967] is available at *http://www.regulations.gov.* Type the docket number in the ''SEARCH'' box and click ''SEARCH''. Click on Open Docket Folder on the line associated with this deviation.

**FOR FURTHER INFORMATION CONTACT:** If you have questions on this temporary deviation, call or email the Bridge Administrator, Coast Guard Thirteenth District; telephone 206–220–7234 email *d13-pf-d13bridges@uscg.mil.*

**SUPPLEMENTARY INFORMATION:** Multnomah County has requested that the Hawthorne Bridge, mile 13.1, across the Willamette River at Portland, Oregon remain in the closed-to-navigation position from 5 a.m. until 5 p.m. on November 15, 2015 to allow for critical maintenance repairs to the bridge lifting mechanism.

The Hawthorne Bridge is a vertical lift bridge providing 49 feet of vertical clearance in the closed-to-navigation position, and unlimited clearance in the open position referenced to the vertical clearance above Columbia River Datum 0.0. The Hawthorne Bridge operates in accordance with 33 CFR 117.897, which allows the bridge to remain closed between 7 a.m. and 9 a.m. and 4 p.m. and 6 p.m. Monday through Friday. No advance notice for an opening is required.

Moderate to heavy vessel traffic exists on this part of the Willamette River, including vessels ranging from commercial tug and barge to small pleasure craft. The average number of drawbridge openings for the time covered by this deviation is three lifts. This deviation allows the lift span of the Hawthorne Bridge across the Willamette River, mile 13.1, to remain in the closed-to-navigation position, and need not open for maritime traffic from 5 a.m. until 5 p.m. on November 15, 2015. The bridge shall operate in accordance to 33 CFR 117.897 at all other times.

Vessels able to pass through the bridge in the closed-to-navigation position may do so at anytime. The bridge will not be able to immediately open for emergencies, and there is no immediate alternate route for vessels to pass. However, with a two hour notification for an emergency opening request, the lift mechanism may be reassembled for the lift span to be opened. Major waterway users have been notified and coordinated with for this deviation period. The Coast Guard will also inform the users of the waterways through our Local and Broadcast Notices to Mariners of the change in operating schedule for the bridges so that vessels can arrange their transits to minimize any impact caused by the temporary deviation.

In accordance with 33 CFR 117.35(e), the drawbridge must return to its regular operating schedule immediately at the end of the designated time period. This deviation from the operating regulations is authorized under 33 CFR 117.35.

Dated: October 16, 2015.

**Steven M. Fischer,**

*Bridge Administrator, Thirteenth Coast Guard District.*

[FR Doc. 2015–26819 Filed 10–21–15; 8:45 am]

**BILLING CODE 9110–04–P**

---

## DEPARTMENT OF HOMELAND SECURITY

## Coast Guard

## 33 CFR Part 165

**[Docket Number USCG–2015–0483]**

**RIN 1625–AA00**

## Safety Zone; Ironman 70.3 Miami; Miami, FL

**AGENCY:** Coast Guard, DHS.

**ACTION:** Temporary final rule.

**SUMMARY:** The Coast Guard is establishing a safety zone on the waters of Biscayne Bay, east of Bayfront Park, in Miami, Florida during the 2015 Ironman 70.3 Miami, a triathlon. The Ironman 70.3 Miami is scheduled to take place on October 25, 2015. Approximately 2,500 participants are anticipated to participate in the swim portion of the event. No spectators are expected to be present during the event. The safety zone is necessary to ensure the safety of participants, vessels, and the general public during the event. Persons and vessels, except those participating in the event, are prohibited from entering, transiting through, anchoring in, or remaining within the regulated area unless authorized by the Captain of the Port Miami or a designated representative.

**DATES:** This rule is effective and will be enforced from 6 a.m. to 11 a.m. on October 25, 2015.

**ADDRESSES:** To view documents mentioned in this preamble as being available in the docket, go to *http://www.regulations.gov,* type USCG–2015–0483 in the ''SEARCH'' box and click ''SEARCH.'' Click on Open Docket Folder on the line associated with this rule.

**FOR FURTHER INFORMATION CONTACT:** If you have questions on this rule, call or email Petty Officer Benjamin Colbert, Waterways Management Division, U.S. Coast Guard; telephone 305–535–4317, email *Benjamin.R.Colbert@uscg.mil.*

**SUPPLEMENTARY INFORMATION:**

### I. Table of Abbreviations

CFR Code of Federal Regulations

DHS Department of Homeland Security
E.O. Executive order
FR Federal Register
NPRM Notice of proposed rulemaking
Pub. L. Public Law
§ Section
U.S.C. United States Code

## II. Background Information and Regulatory History

On May 27, 2015, the Miami Tri Events, LLC notified the Coast Guard that from 6:30 a.m. to 10 a.m., on October 25, 2015, it will organize a triathlon with a swim portion in Biscayne Bay east of Bayfront Park. In response, on August 14, 2015, the Coast Guard published a notice of proposed rulemaking (NPRM) titled Safety Zone; Mack Ironman 70.3, Biscayne Bay; Miami, FL (80 FR 48784). There, we stated why we issued the NPRM and invited comments on our proposed regulatory action related to this swim event. During the comment period that ended September 28, 2015, we received no comments.

Under 5 U.S.C. 553(d)(3), the Coast Guard finds that good cause exists for making this rule effective less than 30 days after publication in the **Federal Register**. There was insufficient time between the close of the comment period and the event date to publish with 30 days or more before the effective date. In order to ensure the safety of the public during this event, the Coast Guard finds it necessary to establish this safety zone during the Ironman 70.3 swim event. Delay in publishing this rule would be impracticable, as the event will take place in less than 30 days. In addition to being impracticable, delay in publishing this rule would be contrary to public interest. This rule is required in order to ensure the safety of event participants as they swim across a busy waterway.

## III. Legal Authority and Need for Rule

The Coast Guard is issuing this rule under authority in 33 U.S.C. 1231; 50 U.S.C. 191; 33 CFR 1.05–1, 6.04–1, 6.04–6, and 160.5; Department of Homeland Security Delegation No. 0170.1. The Captain of the Port Miami (COTP) has determined that potential hazards associated with this swim event warrant a temporary safety zone. This zone will ensure necessary precautions are in place to mitigate dangers to human life.

## IV. Discussion of Comments and the Rule

As noted above, we received no comments on the NPRM published on August 14, 2015. The regulatory text of this rule is unchanged from the rule proposed in the NPRM.

This rule will establish a safety zone that will encompass certain waters of Biscayne Bay, Miami, Florida. The safety zone will be enforced from 6 a.m. until 11 a.m. on October 25, 2015. The safety zone will establish an area around the swim portion of the event where non-participant persons and vessels are prohibited from entering, transiting, anchoring, or remaining within. Non-participant persons and vessels may request authorization to enter, transit through, anchor in, or remain within the event area by contacting the Captain of the Port Miami by telephone at 305–535–4472, or a designated representative via VHF radio on channel 16. If authorization to enter, transit through, anchor in, or remain within the event area is granted by the Captain of the Port Miami or a designated representative, all persons and vessels receiving such authorization must comply with the instructions of the Captain of the Port Miami or a designated representative. The Coast Guard will provide notice of the safety zone by Local Notice to Mariners, Broadcast Notice to Mariners, and on-scene designated representatives.

## V. Regulatory Analyses

We developed this rule after considering numerous statutes and executive orders (E.O.s) related to rulemaking. Below we summarize our analyses based on a number of these statutes and E.O.s, and we discuss First Amendment rights of protestors.

### *A. Regulatory Planning and Review*

E.O.s 12866 and 13563 direct agencies to assess the costs and benefits of available regulatory alternatives and, if regulation is necessary, to select regulatory approaches that maximize net benefits. E.O. 13563 emphasizes the importance of quantifying both costs and benefits, of reducing costs, of harmonizing rules, and of promoting flexibility. This rule has not been designated a ''significant regulatory action,'' under E.O. 12866. Accordingly, it has not been reviewed by the Office of Management and Budget.

The economic impact of this rule is not significant for the following reasons: (1) The safety zone will be enforced for only five hours; (2) although non-participant persons and vessels will not be able to enter, transit through, anchor in, or remain within the event area without authorization from the Captain of the Port Miami or a designated representative, they may operate in the surrounding area during the enforcement period; (3) non-participant persons and vessels may still enter, transit through, anchor in, or remain within the event area during the enforcement period if authorized by the Captain of the Port Miami or a designated representative; and (4) the Coast Guard will provide advance notification of the safety zone to the local maritime community by Local Notice to Mariners and Broadcast Notice to Mariners.

### *B. Impact on Small Entities*

The Regulatory Flexibility Act of 1980, 5 U.S.C. 601–612, as amended, requires Federal agencies to consider the potential impact of regulations on small entities during rulemaking. The term ''small entities'' comprises small businesses, not-for-profit organizations that are independently owned and operated and are not dominant in their fields, and governmental jurisdictions with populations of less than 50,000. The Coast Guard received no comments from the Small Business Administration on this rulemaking. The Coast Guard certifies under 5 U.S.C. 605(b) that this rule will not have a significant economic impact on a substantial number of small entities.

While some owners or operators of vessels intending to transit the safety zone may be small entities, for the reasons stated in section V.A above, this rule will not have a significant economic impact on any vessel owner or operator.

Under section 213(a) of the Small Business Regulatory Enforcement Fairness Act of 1996 (Pub. L. 104–121), we want to assist small entities in understanding this rule. If the rule would affect your small business, organization, or governmental jurisdiction and you have questions concerning its provisions or options for compliance, please contact the person listed in the **FOR FURTHER INFORMATION CONTACT** section.

Small businesses may send comments on the actions of Federal employees who enforce, or otherwise determine compliance with, Federal regulations to the Small Business and Agriculture Regulatory Enforcement Ombudsman and the Regional Small Business Regulatory Fairness Boards. The Ombudsman evaluates these actions annually and rates each agency's responsiveness to small business. If you wish to comment on actions by employees of the Coast Guard, call 1–888–REG–FAIR (1–888–734–3247). The Coast Guard will not retaliate against small entities that question or complain about this rule or any policy or action of the Coast Guard.

*C. Collection of Information*

This rule will not call for a new collection of information under the Paperwork Reduction Act of 1995 (44 U.S.C. 3501–3520).

*D. Federalism and Indian Tribal Governments*

A rule has implications for federalism under E.O. 13132, Federalism, if it has a substantial direct effect on the States, on the relationship between the national government and the States, or on the distribution of power and responsibilities among the various levels of government. We have analyzed this rule under that Order and have determined that it is consistent with the fundamental federalism principles and preemption requirements described in E.O. 13132.

Also, this rule does not have tribal implications under E.O. 13175, Consultation and Coordination with Indian Tribal Governments, because it does not have a substantial direct effect on one or more Indian tribes, on the relationship between the Federal Government and Indian tribes, or on the distribution of power and responsibilities between the Federal Government and Indian tribes. If you believe this rule has implications for federalism or Indian tribes, please contact the person listed in the **FOR FURTHER INFORMATION CONTACT** section above.

*E. Unfunded Mandates Reform Act*

The Unfunded Mandates Reform Act of 1995 (2 U.S.C. 1531–1538) requires Federal agencies to assess the effects of their discretionary regulatory actions. In particular, the Act addresses actions that may result in the expenditure by a State, local, or tribal government, in the aggregate, or by the private sector of $100,000,000 (adjusted for inflation) or more in any one year. Though this rule will not result in such an expenditure, we do discuss the effects of this rule elsewhere in this preamble.

*F. Environment*

We have analyzed this rule under Department of Homeland Security Management Directive 023–01 and Commandant Instruction M16475.lD, which guide the Coast Guard in complying with the National Environmental Policy Act of 1969(42 U.S.C. 4321–4370f), and have determined that this action is one of a category of actions that do not individually or cumulatively have a significant effect on the human environment. This rule involves a safety zone lasting less than 5 hours. It is categorically excluded from further review under paragraph 34(g) of Figure 2–1 of the Commandant Instruction. An environmental analysis checklist supporting this determination and a Categorical Exclusion Determination are available in the docket where indicated under **ADDRESSES**. We seek any comments or information that may lead to the discovery of a significant environmental impact from this rule.

*G. Protest Activities*

The Coast Guard respects the First Amendment rights of protesters. Protesters are asked to contact the person listed in the **FOR FURTHER INFORMATION CONTACT** section to coordinate protest activities so that your message can be received without jeopardizing the safety or security of people, places or vessels.

**List of Subjects in 33 CFR Part 165**

Harbors, Marine safety, Navigation (water), Reporting and recordkeeping requirements, Security measures, Waterways.

For the reasons discussed in the preamble, the Coast Guard amends 33 CFR part 165 as follows:

## PART 165— REGULATED NAVIGATION AREAS AND LIMITED ACCESS AREAS

■ 1. The authority citation for part 165 continues to read as follows:

**Authority:** 33 U.S.C. 1231; 50 U.S.C. 191; 33 CFR 1.05–1, 6.04–1, 6.04–6, and 160.5; Department of Homeland Security Delegation No. 0170.1.

■ 2. Add a temporary § 165.T07–0483 to read as follows:

**§ 165.T07–0483 Safety Zone; Ironman 70.3 Miami, Biscayne Bay; Miami, FL.**

(a) *Regulated area.* The following regulated area is a safety zone. All waters of Biscayne Bay located east of Bayfront Park and encompassed within the following points: Starting at Point 1 in position 25°46′44″ N., 080°10′59″ W.; thence southeast to Point 2 in position 25°46′24″ N., 080°10′44″ W.; thence southwest to Point 3 in position 25°46′18″ N., 080°11′05″ W.; thence north to Point 4 in position 25°46′33″ N., 080°11′05″ W.; thence northeast back to origin. All coordinates are North American Datum 1983.

(b) *Definition.* The term ''designated representative'' means Coast Guard Patrol Commanders, including Coast Guard coxswains, petty officers, and other officers operating Coast Guard vessels, and Federal, state, and local officers designated by or assisting the Captain of the Port Miami in the enforcement of the regulated area.

(c) *Regulations.* (1) Non-participant persons and vessels are prohibited from entering, transiting through, anchoring in, or remaining within the regulated area unless authorized by Captain of the Port Miami or a designated representative.

(2) Non-participant persons and vessels may request authorization to enter, transit through, anchor in, or remain within the regulated area by contacting the Captain of the Port Miami by telephone at 305–535–4472, or a designated representative via VHF radio on channel 16. If authorization is granted by the Captain of the Port Miami or a designated representative, all persons and vessels receiving such authorization must comply with the instructions of the Captain of the Port Miami or a designated representative.

(3) The Coast Guard will provide notice of the safety zone by Local Notice to Mariners, Broadcast Notice to Mariners and on-scene designated representatives.

(d) *Enforcement period.* This rule will be enforced on October 25, 2015 from 6 a.m. until 11:00 a.m.

Dated: October 16, 2015.

**M.C. Long,**

*Captain, U.S. Coast Guard, Acting Captain of the Port Miami.*

[FR Doc. 2015–26832 Filed 10–21–15; 8:45 am]

BILLING CODE 9110–04–P

---

## DEPARTMENT OF HOMELAND SECURITY

## Coast Guard

## 33 CFR Part 165

**[Docket Number USCG–2015–0906]**

**RIN 1625–AA00**

## Safety Zone; Pago Pago Harbor, American Samoa

**AGENCY:** Coast Guard, DHS.

**ACTION:** Temporary final rule.

**SUMMARY:** The Coast Guard is establishing a safety zone during the 2015 Fautasi Ocean Challenge in Pago Pago Harbor, American Samoa. This action is necessary to safeguard the participants and spectators, including all crews, vessels, and persons on the water in Pago Pago Harbor during the Fautasi Race. This regulation will functionally close the port to commercial vessel traffic during the start and finish of the race, but will not require the evacuation of any vessels from harbor. Entry into, transiting, or anchoring in the harbor is prohibited to all vessels not registered with the

sponsor as participants or not part of the race patrol, unless specifically authorized by the Captain of the Port (COTP) Honolulu or a designated representative.

**DATES:** This rule is effective from 10:00 a.m. (SST) to 4:00 p.m. (SST) on November 11, 2015 and from 10:00 a.m. (SST) to 4:00 p.m. (SST) on November 27, 2015.

**ADDRESSES:** To view documents mentioned in this preamble as being available in the docket, go to *http://www.regulations.gov,* type USCG–2015–0906 in the ''SEARCH'' box and click ''SEARCH.'' Click on Open Docket Folder on the line associated with this rule.

**FOR FURTHER INFORMATION CONTACT:** If you have questions on this rule, call or email Lieutenant Commander Nicolas Jarboe, Waterways Management Division, U.S. Coast Guard Sector Honolulu; telephone (808) 541–4359, email *nicolas.a.jarboe@uscg.mil*.

**SUPPLEMENTARY INFORMATION:**

## I. Table of Abbreviations

CFR Code of Federal Regulations
DHS Department of Homeland Security
E.O. Executive order
FR Federal Register
NPRM Notice of proposed rulemaking
Pub. L. Public Law
§ Section
U.S.C. United States Code

## II. Background Information and Regulatory History

The Coast Guard is issuing this temporary rule without prior notice and opportunity to comment pursuant to authority under section 4(a) of the Administrative Procedure Act (APA) (5 U.S.C. 553(b)). This provision authorizes an agency to issue a rule without prior notice and opportunity to comment when the agency for good cause finds that those procedures are ''impracticable, unnecessary, or contrary to the public interest.'' Under 5 U.S.C. 553(b)(B), the Coast Guard finds that good cause exists for not publishing a notice of proposed rulemaking (NPRM) with respect to this rule because the specific details of the event were received less than 90 days prior to event and needed to be worked through between the event coordinator and the Coast Guard over an extended period of time. The Coast Guard's discussions with the event sponsor to determine the requirements for this zone were finalized on 28 September 2015, which would not allow for a 30 day comment period. This safety zone is required to restrict vessel traffic to ensure the safety of the participants, spectators, the marine patrol and race officials. It is impracticable to publish an NPRM because we must establish this safety zone by November 11, 2015.

We are issuing this rule, and under 5 U.S.C. 553(d)(3), the Coast Guard finds that good cause exists for making it effective less than 30 days after publication in the **Federal Register**. Delaying the effective date of this rule would be contrary to public interest because immediate action is needed to ensure the safety of the participants, spectators, the marine patrol and race officials.

## III. Legal Authority and Need for Rule

The statutory basis for this rulemaking is 33 U.S.C. 1231, which gives the Coast Guard, under a delegation from the Secretary of Homeland Security, regulatory authority to enforce the Ports and Waterways Safety Act. A safety zone is a water area, shore area, or water and shore area, for safety or environmental purposes, of which access is limited to authorized persons, vehicles, or vessels.

The purpose of this rule is to minimize vessel traffic in Pago Pago Harbor during the start and finish of the Fautasi canoe race. This is a major marine event in American Samoa. It is anticipated that a large number of spectator pleasure crafts will be drawn to the event. These vessels will pose a significant hazard to those operating in or near the area. The COTP Honolulu is establishing a temporary safety zone for Pago Pago Harbor. This rule is needed to safeguard persons and vessels during the canoe boat races.

## IV. Discussion of the Rule

This rule will create a safety zone in Pago Pago Harbor. The Coast Guard is closing the harbor to all vessels not authorized by the Captain of the Port to enter, depart, or transit within the port for the duration of the event. The Captain of the Port authorizes registered participants, support vessels, and enforcement vessels to enter and remain in the zone. The harbor will remain closed until the Coast Guard issues an ''All Clear'' for the harbor after the race has concluded and the harbor is deemed safe for normal operations. This rule does not require any vessel to evacuate the port if moored.

## V. Regulatory Analyses

We developed this rule after considering numerous statutes and executive orders (E.O.s) related to rulemaking. Below we summarize our analyses based on a number of these statutes and E.O.s, and we discuss First Amendment rights of protestors.

### *A. Regulatory Planning and Review*

E.O.s 12866 and 13563 direct agencies to assess the costs and benefits of available regulatory alternatives and, if regulation is necessary, to select regulatory approaches that maximize net benefits. E.O. 13563 emphasizes the importance of quantifying both costs and benefits, of reducing costs, of harmonizing rules, and of promoting flexibility. This rule has not been designated a ''significant regulatory action,'' under E.O. 12866. Accordingly, it has not been reviewed by the Office of Management and Budget.

This regulatory action determination is based on the size, location, duration, and time-of-day of the safety zone. Due to the number of participants and the size of the harbor, vessels cannot safely transit the harbor during the race. Moreover, the Coast Guard would issue a Broadcast Notice to Mariners via VHF–FM marine channel 16 about the zone, and the rule would allow vessels to seek permission to enter the zone.

### *B. Impact on Small Entities*

The Regulatory Flexibility Act of 1980, 5 U.S.C. 601–612, as amended, requires Federal agencies to consider the potential impact of regulations on small entities during rulemaking. The term ''small entities'' comprises small businesses, not-for-profit organizations that are independently owned and operated and are not dominant in their fields, and governmental jurisdictions with populations of less than 50,000. The Coast Guard certifies under 5 U.S.C. 605(b) that this rule will not have a significant economic impact on a substantial number of small entities.

While some owners or operators of vessels intending to transit the safety zone may be small entities, for the reasons stated in section V.A above, this rule will not have a significant economic impact on any vessel owner or operator.

Under section 213(a) of the Small Business Regulatory Enforcement Fairness Act of 1996 (Pub. L. 104–121), we want to assist small entities in understanding this rule. If the rule would affect your small business, organization, or governmental jurisdiction and you have questions concerning its provisions or options for compliance, please contact the person listed in the **FOR FURTHER INFORMATION CONTACT** section.

Small businesses may send comments on the actions of Federal employees who enforce, or otherwise determine compliance with, Federal regulations to the Small Business and Agriculture Regulatory Enforcement Ombudsman

and the Regional Small Business Regulatory Fairness Boards. The Ombudsman evaluates these actions annually and rates each agency's responsiveness to small business. If you wish to comment on actions by employees of the Coast Guard, call 1–888–REG–FAIR (1–888–734–3247). The Coast Guard will not retaliate against small entities that question or complain about this rule or any policy or action of the Coast Guard.

*C. Collection of Information*

This rule will not call for a new collection of information under the Paperwork Reduction Act of 1995 (44 U.S.C. 3501–3520).

*D. Federalism and Indian Tribal Governments*

A rule has implications for federalism under E.O. 13132, Federalism, if it has a substantial direct effect on the States, on the relationship between the national government and the States, or on the distribution of power and responsibilities among the various levels of government. We have analyzed this rule under that Order and have determined that it is consistent with the fundamental federalism principles and preemption requirements described in E.O. 13132.

Also, this rule does not have tribal implications under E.O. 13175, Consultation and Coordination with Indian Tribal Governments, because it does not have a substantial direct effect on one or more Indian tribes, on the relationship between the Federal Government and Indian tribes, or on the distribution of power and responsibilities between the Federal Government and Indian tribes. If you believe this rule has implications for federalism or Indian tribes, please contact the person listed in the **FOR FURTHER INFORMATION CONTACT** section above.

*E. Unfunded Mandates Reform Act*

The Unfunded Mandates Reform Act of 1995 (2 U.S.C. 1531–1538) requires Federal agencies to assess the effects of their discretionary regulatory actions. In particular, the Act addresses actions that may result in the expenditure by a State, local, or tribal government, in the aggregate, or by the private sector of $100,000,000 (adjusted for inflation) or more in any one year. Though this rule will not result in such an expenditure, we do discuss the effects of this rule elsewhere in this preamble.

*F. Environment*

We have analyzed this rule under Department of Homeland Security Management Directive 023–01 and Commandant Instruction M16475.lD, which guide the Coast Guard in complying with the National Environmental Policy Act of 1969(42 U.S.C. 4321–4370f), and have determined that this action is one of a category of actions that do not individually or cumulatively have a significant effect on the human environment. This rule involves temporary and limited safety zone in Pago Pago Harbor. It is categorically excluded from further review under paragraph 34(g) of Figure 2–1 of the Commandant Instruction. An environmental analysis checklist supporting this determination and a Categorical Exclusion Determination are available in the docket where indicated under **ADDRESSES**. We seek any comments or information that may lead to the discovery of a significant environmental impact from this rule.

*G. Protest Activities*

The Coast Guard respects the First Amendment rights of protesters. Protesters are asked to contact the person listed in the **FOR FURTHER INFORMATION CONTACT** section to coordinate protest activities so that your message can be received without jeopardizing the safety or security of people, places or vessels.

**List of Subjects in 33 CFR Part 165**

Harbors, Marine safety, Navigation (water), Reporting and recordkeeping requirements, Safety measures, and Waterways.

For the reasons discussed in the preamble, the Coast Guard amends 33 CFR part 165 as follows:

## PART 165— REGULATED NAVIGATION AREAS AND LIMITED ACCESS AREAS

■ 1. The authority citation for part 165 continues to read as follows:

**Authority:** 33 U.S.C. 1231; 50 U.S.C. 191; 33 CFR 1.05–1, 6.04–1, 6.04–6, and 160.5; Department of Homeland Security Delegation No. 0170.1.

■ 2. Add § 165.T15–0906 to read as follows:

**§ 165.T15–0906 Safety Zone; Pago Pago Harbor, America Samoa.**

(a) *Location.* The following area is a safety zone: Breakers Point (eastern edge of Pago Pago Harbor entrance) thence southeast to 14°18′47″ S, 170°38′54.5″ W thence southwest to 14°19′03″ S, 170°39′14″ W, thence northwest to Tulutulu Point and then following the coastline encompassing Pago Pago Harbor. This regulated area extends from the surface of the water to the ocean floor.

(b) *Enforcement period.* This rule will be enforced from 10:00 a.m. (SST) to 4:00 p.m. (SST) on November 11, 2015 and from 10:00 a.m. (SST) to 4:00 p.m. (SST) on November 27, 2015.

(c) *Regulations.* (1) All persons and vessels not registered with the sponsor as participants or support/enforcement vessels are considered spectators. The ''support/enforcement vessels'' consist of any territory, or local law enforcement and sponsor provided vessels assigned or approved by the Captain of the Port Honolulu to patrol the safety zone.

(2) No spectator shall anchor, block, loiter or impede the through transit of participants or support/enforcement vessels in the safety zone during the effective date and times, unless cleared for entry by or through a support/enforcement vessel.

(3) Spectator vessels may be moored to a waterfront facility within the safety zone in such a way that they shall not interfere with the progress of the event. Such mooring must be complete at least 30 minutes prior to the establishment of the safety zone and remain moored through the duration of the event.

(d) *Informational Broadcasts.* The Captain of the Port or a designated representative will inform the public through broadcast notices to mariners of the enforcement period for the safety zone. The harbor will remain closed until the Coast Guard issues an ''All Clear'' for the harbor after the race has concluded the harbor is deemed safe for normal operations.

(e) *Penalties.* Vessels or persons violating this rule would be subject to the penalties set forth in 33 U.S.C. 1232.

Dated: September 29, 2015.

**S.N. Gilreath,**

*Captain, U.S. Coast Guard, Captain of the Port Honolulu.*

[FR Doc. 2015–26955 Filed 10–21–15; 8:45 am]

BILLING CODE 9110–04–P

## DEPARTMENT OF HOMELAND SECURITY

## Coast Guard

## 33 CFR Part 165

**[Docket Number USCG–2015–0893]**

**RIN 1625–AA00**

## Safety Zone; Mississippi River Between Mile 467.0 and 472.0; Transylvania, LA

**AGENCY:** Coast Guard, DHS.

**ACTION:** Temporary final rule.

**SUMMARY:** The Coast Guard is establishing an emergency temporary safety zone for all waters of the Lower Mississippi River between mile 467.0 and 472.0. Transit into and through this area is prohibited beginning at 11:32 p.m. on September 10, 2015 and will continue through October 31, 2015 or until the width and depth of the navigational channel improves. This safety zone is needed to protect persons, property and infrastructure from the safety hazards associated with the navigational channel being reduced in width and depth due to shallow water and shifting shoals. This has created an especially hazardous situation that does not allow for normal transit through this reach of the river. Deviation from the safety zone is prohibited unless specifically authorized by the Captain of the Port (COTP) Lower Mississippi River or a designated representative.

**DATES:** This rule is effective without actual notice from October 22, 2015 until 11:59 p.m. on October 31, 2015. For purposes of enforcement, actual notice will be used from 11:32 p.m. on September 10, 2015 until October 22, 2015.

**ADDRESSES:** Documents mentioned in this preamble are part of docket [USCG–2015–0893]. To view documents mentioned in this preamble as being available in the docket, go to *http://www.regulations.gov,* type the docket number in the ''SEARCH'' box and click ''SEARCH.'' Click on Open Docket Folder on the line associated with this rulemaking. You may also visit the Docket Management Facility in Room W12–140 on the ground floor of the Department of Transportation West Building, 1200 New Jersey Avenue SE., Washington, DC 20590, between 9 a.m. and 5 p.m., Monday through Friday, except Federal holidays.

**FOR FURTHER INFORMATION CONTACT:** If you have questions on this rule, call or email LT Tyrone L. Conner, U.S. Coast Guard; telephone 901–521–4825, email *Tyrone.L.Conner@uscg.mil.* If you have questions on viewing or submitting material to the docket, call Cheryl F. Collins, Program Manager, Docket Operations, telephone 202–366–9826.

**SUPPLEMENTARY INFORMATION:**

## Table of Acronyms

APA Administrative Procedures Act
BNM Broadcast Notice to Mariners
COTP Captain of the Port
DHS Department of Homeland Security
FR Federal Register
LNM Local Notice to Mariners
MM Mile Marker
NPRM Notice of Proposed Rulemaking

## A. Regulatory History and Information

The Coast Guard is issuing this temporary final rule without prior notice and opportunity to comment pursuant to authority under section 4(a) of the Administrative Procedure Act (APA) (5 U.S.C. 553(b)). This provision authorizes an agency to issue a rule without prior notice and opportunity to comment when the agency for good cause finds that those procedures are ''impracticable, unnecessary, or contrary to the public interest.'' Under 5 U.S.C. 553(b)(B), the Coast Guard finds that good cause exists for not publishing a notice of proposed rulemaking (NPRM) with respect to this rule.

On September 10, 2015 the Coast Guard was notified that shallow water and shifting shoals have reduced the width and depth of the navigational channel, creating an especially hazardous situation that does not to allow for normal transit through this reach of the river. This safety zone may include waterways closures, navigation restrictions, and/or other requirements that are vital to maintaining safe navigation. Accordingly, the Coast Guard has determined that immediate and emergency action is necessary to restrict navigation on this stretch of the river.

Therefore, it is impracticable to publish an NPRM because we must establish this safety zone by September 10, 2015. Broadcast Notices to Mariners (BNM) and information sharing with the waterway users will update mariners of the restrictions, requirements, and enforcement times during this emergency situation.

For the same reasons, under 5 U.S.C. 553(d)(3), the Coast Guard finds that good cause exists for making this emergency rule effective less than 30 days after publication in the **Federal Register**. Delaying the effect date of this rule would be contrary to public interest because immediate action is needed to protect life and property from the hazards associated with and resulting from the navigational channel being reduced in width and depth due to shallow water and shifting shoals. This situation has created an especially hazardous situation that does not to allow for normal transit through this reach of the river. Accordingly, the Coast Guard has determined that immediate and emergency action is necessary to restrict navigation on this stretch of the river.

## B. Basis and Purpose

The legal basis and authorities for this rule are found in 33 U.S.C. 1231; 50 U.S.C. 191; 33 CFR 1.05–1; 6.04–1, 6.04–6, and 160.5; Department of Homeland Security Delegation No. 0170.1, which collectively authorize the Coast Guard to establish and define safety zones.

The purpose of this emergency safety zone is to protect life and property from safety hazards associated with the navigational channel being reduced in width and depth due to shallow water and shifting shoals. This situation poses significant safety hazards to vessels and mariners operating in the area. Establishing a safety zone that may include waterways closures, navigation restrictions, and/or other requirements that extends from mile 467.0 to mile 472.0 on Mississippi River is necessary for the Coast Guard to maintain navigational safety.

## C. Discussion of the Temporary Final Rule

The Coast Guard is establishing a temporary emergency safety zone for all vessel traffic on the Mississippi River between mile 467.0 and mile 472.0, extending the entire width of the Mississippi River. Transit into and through this area is prohibited beginning at 11:32 p.m. on September 10, 2015 and will continue through October 31, 2015 or until navigational channel width and depth is improved and response efforts are complete. Deviation from this emergency safety zone is prohibited unless specifically authorized by the COTP Lower Mississippi River, or a designated representative. Deviation requests will be considered and reviewed on a case-by-case basis. The COTP Lower Mississippi River may be contacted by telephone at 1–901–521–4822 or can be reached by VHF–FM channel 16.

## D. Regulatory Analyses

We developed this rule after considering numerous statutes and executive orders related to rulemaking. Below we summarize our analyses based on a number of these statutes or executive orders.

### *1. Regulatory Planning and Review*

This rule is not a significant regulatory action under section 3(f) of Executive Order 12866, Regulatory Planning and Review, as supplemented by Executive Order 13563, Improving Regulation and Regulatory Review, and does not require an assessment of potential costs and benefits under section 6(a)(3) of Executive Order 12866 or under section 1 of Executive Order 13563. The Office of Management and Budget has not reviewed it under those Orders. This rule establishes a temporary emergency safety zone for

vessels on all waters of the Mississippi River from mile 467.0 to mile 472.0. Notifications of enforcement times will be communicated to the marine community via BNM and through Local Notice to Mariners (LNM). The impacts on navigation will be limited to ensuring the safety of mariners and vessels associated with hazards associated with the navigational channel being reduced in width, depth, shoaling, swift currents, and stream eddies.

*2. Impact on Small Entities*

The Regulatory Flexibility Act of 1980 (RFA), 5 U.S.C. 601–612, as amended, requires federal agencies to consider the potential impact of regulations on small entities during rulemaking. The term ''small entities'' comprises small businesses, not-for-profit organizations that are independently owned and operated and are not dominant in their fields, and governmental jurisdictions with populations of less than 50,000. The Coast Guard certifies under 5 U.S.C. 605(b) that this rule will not have a significant economic impact on a substantial number of small entities.

This rule will affect the following entities, some of which may be small entities: The owners or operators of vessels intending to transit the Mississippi River, from 11:32 p.m. on September 10, 2015 to 11:59 p.m. on October 31, 2015. This emergency safety zone will not have a significant economic impact on a substantial number of small entities due to its limited scope and short duration. Additionally, requests to deviate from the rule will be considered on a case-by-case basis. Notifications to the marine community will be made through BNM, LNM, and communications with local waterway users. Notices of changes to the safety zone and effective times will also be made.

*3. Assistance for Small Entities*

Under section 213(a) of the Small Business Regulatory Enforcement Fairness Act of 1996 (Pub. L. 104–121), we want to assist small entities in understanding this rule. If the rule would affect your small business, organization, or governmental jurisdiction and you have questions concerning its provisions or options for compliance, please contact the person listed in the **FOR FURTHER INFORMATION CONTACT**, above.

Small businesses may send comments on the actions of Federal employees who enforce, or otherwise determine compliance with, Federal regulations to the Small Business and Agriculture Regulatory Enforcement Ombudsman and the Regional Small Business Regulatory Fairness Boards. The Ombudsman evaluates these actions annually and rates each agency's responsiveness to small business. If you wish to comment on actions by employees of the Coast Guard, call 1–888–REG–FAIR (1–888–734–3247). The Coast Guard will not retaliate against small entities that question or complain about this rule or any policy or action of the Coast Guard.

*4. Collection of Information*

This rule will not call for a new collection of information under the Paperwork Reduction Act of 1995 (44 U.S.C. 3501–3520).

*5. Federalism*

A rule has implications for federalism under Executive Order 13132, Federalism, if it has a substantial direct effect on the States, on the relationship between the national government and the States, or on the distribution of power and responsibilities among the various levels of government. We have analyzed this rule under that Order and determined that this rule does not have implications for federalism.

*6. Protest Activities*

The Coast Guard respects the First Amendment rights of protesters. Protesters are asked to contact the person listed in the **FOR FURTHER INTFORMATION CONTACT** section to coordinate protest activities so that your message can be received without jeopardizing the safety or security of people, places or vessels.

*7. Unfunded Mandates Reform Act*

The Unfunded Mandates Reform Act of 1995 (2 U.S.C. 1531–1538) requires Federal agencies to assess the effects of their discretionary regulatory actions. In particular, the Act addresses actions that may result in the expenditure by a State, local, or tribal government, in the aggregate, or by the private sector of $100,000,000 (adjusted for inflation) or more in any one year. Though this rule will not result in such an expenditure, we do discuss the effects of this rule elsewhere in this preamble.

*8. Taking of Private Property*

This rule will not cause a taking of private property or otherwise have taking implications under Executive Order 12630, Governmental Actions and Interference with Constitutionally Protected Property Rights.

*9. Civil Justice Reform*

This rule meets applicable standards in sections 3(a) and 3(b)(2) of Executive Order 12988, Civil Justice Reform, to minimize litigation, eliminate ambiguity, and reduce burden.

*10. Protection of Children*

We have analyzed this rule under Executive Order 13045, Protection of Children from Environmental Health Risks and Safety Risks. This rule is not an economically significant rule and does not create an environmental risk to health or risk to safety that may disproportionately affect children.

*11. Indian Tribal Governments*

This rule does not have tribal implications under Executive Order 13175, Consultation and Coordination with Indian Tribal Governments, because it does not have a substantial direct effect on one or more Indian tribes, on the relationship between the Federal Government and Indian tribes, or on the distribution of power and responsibilities between the Federal Government and Indian tribes.

*12. Energy Effects*

This action is not a ''significant energy action'' under Executive Order 13211, Actions Concerning Regulations That Significantly Affect Energy Supply, Distribution, or Use.

*13. Technical Standards*

This rule does not use technical standards. Therefore, we did not consider the use of voluntary consensus standards.

*14. Environment*

We have analyzed this rule under Department of Homeland Security Management Directive 023–01 and Commandant Instruction M16475.lD, which guide the Coast Guard in complying with the National Environmental Policy Act of 1969 (NEPA)(42 U.S.C. 4321–4370f), and have determined that this action is one of a category of actions that do not individually or cumulatively have a significant effect on the human environment. This rule is categorically excluded from further review under paragraph 34(g) of Figure 2–1 of the Commandant Instruction. Because this safety zone is established in response to an emergency situation and is less than one week in duration, an environmental analysis checklist and a categorical exclusion determination are not required. Should this emergency situation require a safety zone lasting longer than one week, an environmental analysis checklist and a categorical exclusion determination will be made available as indicated under **ADDRESSES**.

**List of Subjects in 33 CFR Part 165**

Harbors, Marine safety, Navigation (water), Reporting and recordkeeping requirements, Security measures, Waterways.

For the reasons discussed in the preamble, the Coast Guard amends 33 CFR part 165 as follows:

## PART 165—REGULATED NAVIGATION AREAS AND LIMITED ACCESS AREAS

■ 1. The authority citation for part 165 continues to read as follows:

**Authority:** 33 U.S.C. 1231; 50 U.S.C. 191; 33 CFR 1.05–1; 6.04–1, 6.04–6, and 160.5; Department of Homeland Security Delegation No. 0170.1.

■ 2. A new temporary § 165.T08–0893 is added to read as follows:

**§ 165.T08–0893 Safety Zone; Mississippi River between mile 467.0 and 472.0, Transylvania, LA.**

(a) *Location.* The following area is a safety zone: All waters of the Mississippi River between mile 467.0 and mile 472.0, Transylvania, LA, extending the entire width of the Mississippi River.

(b) *Effective and Enforcement Period.* This rule is effective from 11:32 p.m. on September 10, 2015 until 11:59 p.m. on October 31, 2015, or unless the width and depth of the river improve earlier and response efforts are complete, whichever occurs earlier.

(c) *Regulations.* (1) In accordance with the general regulations in § 165.23 of this part, entry into this zone is prohibited unless authorized by the Captain of the Port (COTP) Lower Mississippi River or a designated representative.

(2) Persons or vessels desiring to enter into or passage through the zone must request permission from the COTP Lower Mississippi River or a designated representative. They may be contacted on VHF–FM channel 16 or by telephone at 901–521–4822.

(3) If permission is granted, all persons and vessels shall comply with the instructions of the COTP Lower Mississippi River or designated representative.

(d) *Informational Broadcasts.* The COTP Lower Mississippi River or a designated representative will inform the public through broadcast notices to mariners of the enforcement period for the emergency safety zone as well as any changes in the dates and times of enforcement.

Dated: September 10,2015.

**T.J. Wendt,**

*Captain, U.S. Coast Guard, Captain of the Port, Lower Mississippi River.*

[FR Doc. 2015–26958 Filed 10–21–15; 8:45 am]

BILLING CODE 9110–04–P

---

## DEPARTMENT OF HOMELAND SECURITY

## Coast Guard

## 33 CFR Part 165

**[Docket Number USCG–2015–0894]**

**RIN 1625–AA00**

## Safety Zone; Mississippi River Between Mile 488.0 and 480.5; Lake Providence, LA

**AGENCY:** Coast Guard, DHS.

**ACTION:** Temporary final rule.

**SUMMARY:** The Coast Guard is establishing an emergency temporary safety zone for all waters of the Lower Mississippi River between mile 488.0 and 480.5. Transit into and through this area is prohibited beginning at 5:43 p.m. on September 9, 2015 and will continue through October 31, 2015 or until the width and depth of the navigational channel improves. This safety zone is needed to protect persons, property and infrastructure from the safety hazards associated with the navigational channel being reduced in width and depth due to shallow water and shifting shoals. This has created an especially hazardous situation that does not allow for normal transit through this reach of the river. Deviation from the safety zone is prohibited unless specifically authorized by the Captain of the Port (COTP) Lower Mississippi River or a designated representative.

**DATES:** This rule is effective without actual notice from October 22, 2015 until 11:59 p.m. on October 31, 2015. For purposes of enforcement, actual notice will be used from 5:43 p.m. on September 9, 2015 until October 22, 2015.

**ADDRESSES:** Documents mentioned in this preamble are part of docket [USCG–2015–0894]. To view documents mentioned in this preamble as being available in the docket, go to *http://www.regulations.gov,* type the docket number in the ''SEARCH'' box and click ''SEARCH.'' Click on Open Docket Folder on the line associated with this rulemaking. You may also visit the Docket Management Facility in Room W12–140 on the ground floor of the Department of Transportation West Building, 1200 New Jersey Avenue SE., Washington, DC 20590, between 9 a.m. and 5 p.m., Monday through Friday, except Federal holidays.

**FOR FURTHER INFORMATION CONTACT:** If you have questions on this rule, call or email LT Tyrone L. Conner, U.S. Coast Guard; telephone 901–521–4825, email *Tyrone.L.Conner@uscg.mil.* If you have questions on viewing or submitting material to the docket, call Cheryl F. Collins, Program Manager, Docket Operations, telephone 202–366–9826.

**SUPPLEMENTARY INFORMATION:**

**Table of Acronyms**

APA Administrative Procedures Act
BNM Broadcast Notice to Mariners
COTP Captain of the Port
DHS Department of Homeland Security
FR Federal Register
LNM Local Notice to Mariners
MM Mile Marker
NPRM Notice of Proposed Rulemaking

**A. Regulatory History and Information**

The Coast Guard is issuing this temporary final rule without prior notice and opportunity to comment pursuant to authority under section 4(a) of the Administrative Procedure Act (APA) (5 U.S.C. 553(b)). This provision authorizes an agency to issue a rule without prior notice and opportunity to comment when the agency for good cause finds that those procedures are ''impracticable, unnecessary, or contrary to the public interest.'' Under 5 U.S.C. 553(b)(B), the Coast Guard finds that good cause exists for not publishing a notice of proposed rulemaking (NPRM) with respect to this rule. On September 9, 2015, the Coast Guard was notified that shallow water and shifting shoals have reduced the width and depth of the navigational channel, creating an especially hazardous situation that does not to allow for normal transit through this reach of the river. This safety zone may include waterways closures, navigation restrictions, and/or other requirements that are vital to maintaining safe navigation. Accordingly, the Coast Guard has determined that immediate and emergency action is necessary to restrict navigation on this stretch of the river.

Therefore, delaying the effective date for this emergency safety zone to complete the NPRM process is impracticable because we must establish this safety zone by September 9, 2015. Broadcast Notices to Mariners (BNM) and information sharing with the waterway users will update mariners of the restrictions, requirements, and enforcement times during this emergency situation.

For the same reasons, under 5 U.S.C. 553(d)(3), the Coast Guard finds that

good cause exists for making this emergency rule effective less than 30 days after publication in the **Federal Register**. Delaying the effective date of this rule would be contrary to public interest because immediate action is needed to protect life and property from the hazards associated with and resulting from the navigational channel being reduced in width and depth due to shallow water and shifting shoals. This situation has created an especially hazardous situation that does not to allow for normal transit through this reach of the river. Accordingly, the Coast Guard has determined that immediate and emergency action is necessary to restrict navigation on this stretch of the river.

**B. Basis and Purpose**

The legal basis and authorities for this rule are found in 33 U.S.C. 1231; 50 U.S.C. 191; 33 CFR 1.05–1; 6.04–1, 6.04–6, and 160.5; Department of Homeland Security Delegation No. 0170.1, which collectively authorize the Coast Guard to establish and define safety zones.

The purpose of this emergency safety zone is to protect life and property from safety hazards associated with the navigational channel being reduced in width and depth due to shallow water and shifting shoals. This situation poses significant safety hazards to vessels and mariners operating in the area. Establishing a safety zone that may include waterways closures, navigation restrictions, and/or other requirements that extends from mile 488.0 to mile 480.5 on Mississippi River is necessary for the Coast Guard to maintain navigational safety.

**C. Discussion of the Temporary Final Rule**

The Coast Guard is establishing a temporary emergency safety zone for all vessel traffic on the Mississippi River between mile 488.0 and mile 480.5, extending the entire width of the Mississippi River. Transit into and through this area is prohibited beginning at 5:43 p.m. on September 9, 2015 and will continue through October 31, 2015 or until navigational channel width and depth is improved and response efforts are complete. Deviation from this emergency safety zone is prohibited unless specifically authorized by the COTP Lower Mississippi River, or a designated representative. Deviation requests will be considered and reviewed on a case-by-case basis. The COTP Lower Mississippi River may be contacted by telephone at 1–901–521–4822 or can be reached by VHF–FM channel 16.

**D. Regulatory Analyses**

We developed this rule after considering numerous statutes and executive orders related to rulemaking. Below we summarize our analyses based on a number of these statutes or executive orders.

*1. Regulatory Planning and Review*

This rule is not a significant regulatory action under section 3(f) of Executive Order 12866, Regulatory Planning and Review, as supplemented by Executive Order 13563, Improving Regulation and Regulatory Review, and does not require an assessment of potential costs and benefits under section 6(a)(3) of Executive Order 12866 or under section 1 of Executive Order 13563. The Office of Management and Budget has not reviewed it under those Orders. This rule establishes a temporary emergency safety zone for vessels on all waters of the Mississippi River from mile 488.0 to mile 480.5. Notifications of enforcement times will be communicated to the marine community via BNM and through Local Notice to Mariners (LNM). The impacts on navigation will be limited to ensuring the safety of mariners and vessels associated with hazards associated with the navigational channel being reduced in width, depth and shoaling.

*2. Impact on Small Entities*

The Regulatory Flexibility Act of 1980 (RFA), 5 U.S.C. 601–612, as amended, requires federal agencies to consider the potential impact of regulations on small entities during rulemaking. The term ''small entities'' comprises small businesses, not-for-profit organizations that are independently owned and operated and are not dominant in their fields, and governmental jurisdictions with populations of less than 50,000. The Coast Guard certifies under 5 U.S.C. 605(b) that this rule will not have a significant economic impact on a substantial number of small entities.

This rule will affect the following entities, some of which may be small entities: the owners or operators of vessels intending to transit the Mississippi River, from 5:43 p.m. September 9, 2015 to 11:59 p.m. on September 16, 2015. This emergency safety zone will not have a significant economic impact on a substantial number of small entities due to its limited scope and short duration. Additionally, requests to deviate from the rule will be considered on a case-by-case basis. Notifications to the marine community will be made through BNM, LNM, and communications with local waterway users. Notices of changes to the safety zone and effective times will also be made.

*3. Assistance for Small Entities*

Under section 213(a) of the Small Business Regulatory Enforcement Fairness Act of 1996 (Pub. L. 104–121), we want to assist small entities in understanding this rule. If the rule would affect your small business, organization, or governmental jurisdiction and you have questions concerning its provisions or options for compliance, please contact the person listed in the **FOR FURTHER INFORMATION CONTACT**, above.

Small businesses may send comments on the actions of Federal employees who enforce, or otherwise determine compliance with, Federal regulations to the Small Business and Agriculture Regulatory Enforcement Ombudsman and the Regional Small Business Regulatory Fairness Boards. The Ombudsman evaluates these actions annually and rates each agency's responsiveness to small business. If you wish to comment on actions by employees of the Coast Guard, call 1–888–REG–FAIR (1–888–734–3247). The Coast Guard will not retaliate against small entities that question or complain about this rule or any policy or action of the Coast Guard.

*4. Collection of Information*

This rule will not call for a new collection of information under the Paperwork Reduction Act of 1995 (44 U.S.C. 3501–3520).

*5. Federalism*

A rule has implications for federalism under Executive Order 13132, Federalism, if it has a substantial direct effect on the States, on the relationship between the national government and the States, or on the distribution of power and responsibilities among the various levels of government. We have analyzed this rule under that Order and determined that this rule does not have implications for federalism.

*6. Protest Activities*

The Coast Guard respects the First Amendment rights of protesters. Protesters are asked to contact the person listed in the **FOR FURTHER INTFORMATION CONTACT** section to coordinate protest activities so that your message can be received without jeopardizing the safety or security of people, places or vessels.

*7. Unfunded Mandates Reform Act*

The Unfunded Mandates Reform Act of 1995 (2 U.S.C. 1531–1538) requires

Federal agencies to assess the effects of their discretionary regulatory actions. In particular, the Act addresses actions that may result in the expenditure by a State, local, or tribal government, in the aggregate, or by the private sector of $100,000,000 (adjusted for inflation) or more in any one year. Though this rule will not result in such an expenditure, we do discuss the effects of this rule elsewhere in this preamble.

*8. Taking of Private Property*

This rule will not cause a taking of private property or otherwise have taking implications under Executive Order 12630, Governmental Actions and Interference with Constitutionally Protected Property Rights.

*9. Civil Justice Reform*

This rule meets applicable standards in sections 3(a) and 3(b)(2) of Executive Order 12988, Civil Justice Reform, to minimize litigation, eliminate ambiguity, and reduce burden.

*10. Protection of Children*

We have analyzed this rule under Executive Order 13045, Protection of Children from Environmental Health Risks and Safety Risks. This rule is not an economically significant rule and does not create an environmental risk to health or risk to safety that may disproportionately affect children.

*11. Indian Tribal Governments*

This rule does not have tribal implications under Executive Order 13175, Consultation and Coordination with Indian Tribal Governments, because it does not have a substantial direct effect on one or more Indian tribes, on the relationship between the Federal Government and Indian tribes, or on the distribution of power and responsibilities between the Federal Government and Indian tribes.

*12. Energy Effects*

This action is not a ''significant energy action'' under Executive Order 13211, Actions Concerning Regulations That Significantly Affect Energy Supply, Distribution, or Use.

*13. Technical Standards*

This rule does not use technical standards. Therefore, we did not consider the use of voluntary consensus standards.

*14. Environment*

We have analyzed this rule under Department of Homeland Security Management Directive 023–01 and Commandant Instruction M16475.lD, which guide the Coast Guard in complying with the National Environmental Policy Act of 1969 (NEPA) (42 U.S.C. 4321–4370f), and have determined that this action is one of a category of actions that do not individually or cumulatively have a significant effect on the human environment. This rule is categorically excluded from further review under paragraph 34(g) of Figure 2–1 of the Commandant Instruction. Because this safety zone is established in response to an emergency situation and is less than one week in duration, an environmental analysis checklist and a categorical exclusion determination are not required. Should this emergency situation require a safety zone lasting longer than one week, an environmental analysis checklist and a categorical exclusion determination will be made available as indicated under **ADDRESSES**.

**List of Subjects in 33 CFR Part 165**

Harbors, Marine safety, Navigation (water), Reporting and recordkeeping requirements, Security measures, Waterways.

For the reasons discussed in the preamble, the Coast Guard amends 33 CFR part 165 as follows:

## PART 165—REGULATED NAVIGATION AREAS AND LIMITED ACCESS AREAS

■ 1. The authority citation for part 165 continues to read as follows:

**Authority:** 33 U.S.C. 1231; 50 U.S.C. 191; 33 CFR 1.05–1; 6.04–1, 6.04–6, and 160.5; Department of Homeland Security Delegation No. 0170.1.

■ 2. A new temporary § 165.T08–0894 is added to read as follows:

**§ 165.T08–0894 Safety Zone; Mississippi River between mile 488.0 and 480.5, Lake Providence, LA.**

(a) *Location.* The following area is a safety zone: all waters of the Mississippi River between mile 488.0 and mile 480.5, Lake Providence, LA, extending the entire width of the Mississippi River.

(b) *Enforcement Period.* This rule will be enforced from 5:43 p.m. on September 9, 2015 through 11:59 p.m. on October 31, 2015, or unless the width and depth of river increase earlier and response efforts are complete, whichever occurs earlier.

(c) *Regulations.* (1) In accordance with the general regulations in § 165.23 of this part, entry into this zone is prohibited unless authorized by the Captain of the Port (COTP) Lower Mississippi River or a designated representative.

(2) Persons or vessels desiring to enter into or passage through the zone must request permission from the COTP Lower Mississippi River or a designated representative. They may be contacted on VHF–FM channel 16 or by telephone at 901–521–4822.

(3) If permission is granted, all persons and vessels shall comply with the instructions of the COTP Lower Mississippi River or designated representative.

(d) *Informational Broadcasts.* The COTP Lower Mississippi River or a designated representative will inform the public through broadcast notices to mariners of the enforcement period for the emergency safety zone as well as any changes in the dates and times of enforcement.

Dated: September 9, 2015.

**T. J. Wendt,**

*Captain, U.S. Coast Guard, Captain of the Port, Lower Mississippi River.*

[FR Doc. 2015–26956 Filed 10–21–15; 8:45 am]

BILLING CODE 9110–04–P

## DEPARTMENT OF DEFENSE

### Defense Acquisition Regulations System

### 48 CFR Parts 202, 204, 212, 239, and 252

**[Docket No. DARS–2015–0039]**

**RIN 0750–AI61**

### Defense Federal Acquisition Regulation Supplement: Network Penetration Reporting and Contracting for Cloud Services (DFARS Case 2013–D018)

**AGENCY:** Defense Acquisition Regulations System, Department of Defense (DoD).

**ACTION:** Interim rule; extension of comment period.

**SUMMARY:** DoD issued an interim rule (DFARS Case 2013–D018) on August 26, 2015, amending the Defense Federal Acquisition Regulation Supplement (DFARS) to implement a section of the National Defense Authorization Act for Fiscal Year 2013 and a section of the National Defense Authorization Act for Fiscal Year 2015, both of which require contractor reporting on network penetrations. The comment period on the interim rule is being extended to November 20, 2015.

**DATES:** For the interim rule published on August 26, 2015 (80 FR 51739), submit comments by November 20, 2015.

**ADDRESSES:** Submit comments identified by DFARS Case 2013–D018, using any of the following methods:

○ *Regulations.gov: http://www.regulations.gov.* Submit comments via the Federal eRulemaking portal by entering ''DFARS Case 2013–D018'' under the heading ''Enter keyword or ID'' and selecting ''Search.'' Select the link ''Submit a Comment'' that corresponds with ''DFARS Case 2013–D018.'' Follow the instructions provided at the ''Submit a Comment'' screen. Please include your name, company name (if any), and ''DFARS Case 2013–D018'' on your attached document.

○ *Email: osd.dfars@mail.mil.* Include DFARS Case 2013–D018 in the subject line of the message.

○ *Fax:* 571–372–6094.

○ *Mail:* Defense Acquisition Regulations System, Attn: Mr. Dustin Pitsch, OUSD(AT&L)DPAP/DARS, Room 3B855, 3060 Defense Pentagon, Washington, DC 20301–3060.

Comments received generally will be posted without change to *http://www.regulations.gov,* including any personal information provided. To confirm receipt of your comment(s), please check *www.regulations.gov,* approximately two to three days after submission to verify posting (except allow 30 days for posting of comments submitted by mail).

**FOR FURTHER INFORMATION CONTACT:** Mr. Dustin Pitsch, telephone 571–372–6090.

**SUPPLEMENTARY INFORMATION:**

## I. Background

On August 26, 2015, DoD published an interim rule (DFARS Case 2013–D018) in the **Federal Register** at 80 FR 51739 revising the DFARS to implement section 941 of the National Defense Authorization Act (NDAA) for Fiscal Year (FY) 2013 (Pub. L. 112–239) and section 1632 of the NDAA for FY 2015 (Pub. L. 113–291). Section 941 requires cleared defense contractors to report penetrations of networks and information systems and allows DoD personnel access to equipment and information to assess the impact of reported penetrations. Section 1632 requires that a contractor designated as operationally critical must report each time a cyber incident occurs on that contractor's network or information systems. This rule also implements DoD policies and procedures for use when contracting for cloud computing services.

The due date for comments on the interim rule (DFARS Case 2013–D018) is being extended from October 26, 2015 to November 20, 2015, to provide additional time for interested parties to submit comments on the interim rule.

**List of Subjects in 48 CFR Parts 202, 204, 212, 239, and 252**

Government procurement.

**Jennifer L. Hawes,**

*Editor, Defense Acquisition Regulations System.*

[FR Doc. 2015–26887 Filed 10–21–15; 8:45 am]

BILLING CODE 6820–EP–P

---

## DEPARTMENT OF COMMERCE

### National Oceanic and Atmospheric Administration

### 50 CFR Part 648

**[Docket No. 130919816–4205–02]**

**RIN 0648–XE266**

### Fisheries of the Northeastern United States; Atlantic Herring Fishery; Georges Bank Haddock Catch Cap Harvested

**AGENCY:** National Marine Fisheries Service (NMFS), National Oceanic and Atmospheric Administration (NOAA), Commerce.

**ACTION:** Temporary rule; closure.

**SUMMARY:** NMFS is closing the directed herring fishery in the Herring Georges Bank Haddock Accountability Measure Area based on a determination that the Georges Bank Haddock Catch Cap has been harvested. Federally permitted vessels may not fish for, possess, transfer, receive, land or sell more than 2,000 lb (907.2 kg) of Atlantic herring in or from the Herring Georges Bank Haddock Accountability Measure Area for the remainder of the fishing year. Also, vessels issued Federal permits for Atlantic herring fishing with midwater trawl gear, or vessels issued an All Areas and/or Areas 2 and 3 Limited Access Atlantic herring permit on a declared Atlantic herring trip, regardless of gear used, may not possess haddock, unless also on a declared Northeast multispecies trip with a Northeast multispecies permit.

**DATES:** Effective 0001 hr local time, October 22, 2015, through April 30, 2016.

**FOR FURTHER INFORMATION CONTACT:** Shannah Jaburek, Fishery Management Specialist, (978) 282–8456.

**SUPPLEMENTARY INFORMATION:** Regulations governing the Atlantic herring fishery and the Northeast (NE) multispecies fishery can be found at 50 CFR part 648. The NE multispecies regulations require specification of acceptable biological catches (ABC), annual catch limits, and overfishing limits for each of the NE multispecies stocks. The haddock catch allowance for vessels issued a Federal herring permit is one percent of each of the ABCs for Gulf of Maine haddock and Georges Bank (GB) haddock stocks. The 2015 haddock ABC is 53,717,835 million lb (24,366 mt), and one percent of the ABC has been allocated to the GB Haddock Catch Cap for the 2015 fishing year, which is further reduced by seven percent to 500,449 lb (227 mt) to account for management uncertainty (80 FR 25109).

The regulations at § 648.201 require the Administrator, Greater Atlantic Region, NMFS (Regional Administrator), to determine when the GB Haddock Catch Cap has been fully harvested. Once the GB Haddock Catch Cap has been harvested, regulations require NMFS to prohibit herring vessel permit holders from fishing for, possessing, transferring, receiving, landing, or selling more than 2,000 lb (907.2 kg) of herring per trip or calendar day in or from the Herring GB Haddock AM Area for the remainder of the fishing year. Additionally, federally permitted herring vessels fishing with midwater trawl gear can no longer possess haddock in the Herring GB Haddock Accountability Management (AM) Area for the reminder of the fishing year, unless vessels are also fishing on a declared NE multispecies trip with a NE multispecies permit. Vessels issued an All Areas or Areas 2 and 3 Limited Access herring permit on a declared herring trip cannot possess haddock in the Herring GB Haddock AM Area, regardless of the gear used.

The Regional Administrator has determined, based on dealer reports and other available information, that the herring fleet has fully harvested the GB Haddock Catch Cap. Therefore, effective 0001 hr local time, October 22, 2015, federally permitted vessels may not fish for, possess, transfer, receive, land, or sell more than 2,000 lb (907.2 kg) of herring per trip or calendar day, in or from the Herring GB Haddock AM Area through April 30, 2016, except vessels that have entered port before 0001 hr on October 22, 2015, may land and sell more than 2,000 lb (907.2 kg) of herring from the Herring GB Haddock AM Area from that trip. A vessel may transit through the Herring GB Haddock AM Area with more than 2,000 lb (907.2 kg) of herring on board, provided all herring onboard was caught outside the Herring GB Haddock AM Area and all fishing gear is stowed and not available for immediate use as defined by § 648.2. Effective 0001 hr, October 22, 2015, herring vessels fishing with midwater trawl gear cannot possess haddock and

vessels issued All Areas or Areas 2 and 3 Limited Access herring vessels on a declared herring trip cannot possess haddock regardless of gear used, unless on a declared NE multispecies trip with a NE multispecies permit. Effective 0001 hr, October 22, 2015, federally permitted dealers may not receive herring from federally permitted herring vessels that harvest more than 2,000 lb (907.2 kg) of herring from the Herring GB Haddock AM Area through 2400 hr local time, April 30, 2016, unless it is from a vessel that entered port before 0001 hr on October 22, 2015.

Classification

This action is required by 50 CFR part 648 and is exempt from review under Executive Order 12866.

NMFS finds good cause pursuant to 5 U.S.C. 553(b)(B) to waive prior notice and the opportunity for public comment because it would be contrary to the public interest and impracticable. This action severely restricts the catch of GB herring in the GB Haddock AM Area until May 1, 2016. The regulations at § 648.201(a) require such action to ensure that herring vessels do not exceed the haddock catch allocated to the herring fishery. Data indicating the herring fleet will have harvested GB Haddock Catch Cap have only recently become available. If implementation of this closure is delayed to solicit prior public comment, the catch of GB haddock allocated to the herring fishery for this fishing year may be exceeded, thereby undermining the conservation objectives of the FMP. NMFS further finds, pursuant to 5 U.S.C 553(d)(3), good cause to waive the 30-day delayed effectiveness period for the reasons stated above.

**Authority:** 16 U.S.C. 1801 *et seq.*

Dated: October 19, 2015.

**Emily H. Menashes,**

*Acting Director, Office of Sustainable Fisheries, National Marine Fisheries Service.*

[FR Doc. 2015–26875 Filed 10–19–15; 4:15 pm]

**BILLING CODE 3510–22–P**

## DEPARTMENT OF COMMERCE

### National Oceanic and Atmospheric Administration

### 50 CFR Part 679

**[Docket No. 141021887–5172–02]**

**RIN 0648–XE225**

## Fisheries of the Exclusive Economic Zone Off Alaska; Pacific Ocean Perch in the Bering Sea Subarea of the Bering Sea and Aleutian Islands Management Area

**AGENCY:** National Marine Fisheries Service (NMFS), National Oceanic and Atmospheric Administration (NOAA), Commerce.

**ACTION:** Temporary rule; modification of a closure.

**SUMMARY:** NMFS is opening directed fishing for Pacific ocean perch in the Bering Sea subarea of the Bering Sea and Aleutian Islands management area. This action is necessary to fully use the 2015 total allowable catch of Pacific ocean perch specified for the Bering Sea subarea of the Bering Sea and Aleutian Islands management area.

**DATES:** Effective 1200 hrs, Alaska local time (A.l.t.), October 20, 2015, through 1200 hrs, A.l.t., December 31, 2015. Comments must be received at the following address no later than 4:30 p.m., A.l.t., November 3, 2015.

**ADDRESSES:** You may submit comments on this document, identified by FDMS Docket Number 2014–0134, by any of the following methods:

- *Electronic Submission:* Submit all electronic public comments via the Federal e-Rulemaking Portal. Go to *www.regulations.gov/#!docketDetail;D=NOAA-NMFS-2014-0134,* click the ''Comment Now!'' icon, complete the required fields, and enter or attach your comments.
- *Mail:* Submit written comments to Glenn Merrill, Assistant Regional Administrator, Sustainable Fisheries Division, Alaska Region NMFS, Attn: Ellen Sebastian. Mail comments to P.O. Box 21668, Juneau, AK 99802–1668.

*Instructions:* Comments sent by any other method, to any other address or individual, or received after the end of the comment period, may not be considered by NMFS. All comments received are a part of the public record and will generally be posted for public viewing on *www.regulations.gov* without change. All personal identifying information (*e.g.,* name, address, etc.), confidential business information, or otherwise sensitive information submitted voluntarily by the sender will be publicly accessible. NMFS will accept anonymous comments (enter ''N/A'' in the required fields if you wish to remain anonymous). Attachments to electronic comments will be accepted in Microsoft Word, Excel, or Adobe PDF file formats only.

**FOR FURTHER INFORMATION CONTACT:** Steve Whitney, 907–586–7228.

**SUPPLEMENTARY INFORMATION:** NMFS manages the groundfish fishery in the Bering Sea and Aleutian Islands management area (BSAI) exclusive economic zone according to the Fishery Management Plan for Groundfish of the Bering Sea and Aleutian Islands management area (FMP) prepared by the North Pacific Fishery Management Council under authority of the Magnuson-Stevens Fishery Conservation and Management Act. Regulations governing fishing by U.S. vessels in accordance with the FMP appear at subpart H of 50 CFR part 600 and 50 CFR part 679.

NMFS closed directed fishing for Pacific ocean perch (POP) in the Bering Sea subarea of the BSAI under § 679.20(d)(1)(iii) (80 FR 11919, March 5, 2015).

NMFS has determined that approximately 5,000 metric tons of POP remain in the directed fishing allowance. Therefore, in accordance with § 679.25(a)(1)(i), (a)(2)(i)(C), and (a)(2)(iii)(D), and to fully utilize the 2015 total allowable catch of POP in the Bering Sea subarea of the BSAI, NMFS is terminating the previous closure and is opening directed fishing for POP in Bering Sea subarea of the BSAI, effective 1200 hrs, A.l.t., October 20, 2015, through 1200 hrs, A.l.t., December 31, 2015. This will enhance the socioeconomic well-being of harvesters dependent on POP in this area.

The Administrator, Alaska Region considered the following factors in reaching this decision: (1) the current catch of POP in the BSAI and, (2) the harvest capacity and stated intent on future harvesting patterns of vessels participating in this fishery.

### Classification

This action responds to the best available information recently obtained from the fishery. The Assistant Administrator for Fisheries, NOAA (AA), finds good cause to waive the requirement to provide prior notice and opportunity for public comment pursuant to the authority set forth at 5 U.S.C. 553(b)(B), as such requirement is impracticable and contrary to the public interest. This requirement is impracticable and contrary to the public interest as it would prevent NMFS from

responding to the most recent fisheries data in a timely fashion and would delay the opening of POP directed fishing in the Bering Sea subarea of the BSAI. NMFS was unable to publish a notice providing time for public comment because the most recent, relevant data only became available as of October 16, 2015.

The AA also finds good cause to waive the 30-day delay in the effective date of this action under 5 U.S.C. 553(d)(3). This finding is based upon the reasons provided above for waiver of prior notice and opportunity for public comment.

Without this inseason adjustment, NMFS could not allow the fishery for POP in the Bering Sea subarea of the BSAI to be harvested in an expedient manner and in accordance with the regulatory schedule. Under § 679.25(c)(2), interested persons are invited to submit written comments on this action to the above address until November 3, 2015.

This action is required by § 679.20 and § 679.25 and is exempt from review under Executive Order 12866.

**Authority:** 16 U.S.C. 1801 *et seq.*

Dated: October 19, 2015.

**Emily H. Menashes,**

*Acting Director, Office of Sustainable Fisheries, National Marine Fisheries Service.*

[FR Doc. 2015–26871 Filed 10–19–15; 4:15 pm]

BILLING CODE 3510–22–P

# Proposed Rules

Federal Register
Vol. 80, No. 204
Thursday, October 22, 2015

This section of the FEDERAL REGISTER contains notices to the public of the proposed issuance of rules and regulations. The purpose of these notices is to give interested persons an opportunity to participate in the rule making prior to the adoption of the final rules.

## NATIONAL CREDIT UNION ADMINISTRATION

### 12 CFR Part 703

**RIN 3133–AE55**

### Investment and Deposit Activities—Bank Notes

**AGENCY:** National Credit Union Administration (NCUA).

**ACTION:** Proposed rule.

**SUMMARY:** The NCUA Board (Board) proposes to amend the maturity requirement for bank notes to be permissible investments for federal credit unions (FCUs) by removing the word ''original'' from the current requirement that bank notes have ''original weighted average maturities of less than 5 years.'' This amendment will provide regulatory relief for FCUs.

**DATES:** Comments must be received on or before November 23, 2015.

**ADDRESSES:** You may submit comments by any of the following methods, but please send comments by one method only:

- *Federal eRulemaking Portal: http://www.regulations.gov.* Follow the instructions for submitting comments.
- *NCUA Web site: http://www.ncua.gov/RegulationsOpinionsLaws/proposed_regs/proposed_regs.html.* Follow the instructions for submitting comments.
- *Email:* Address to *regcomments@ncua.gov.* Include ''[Your name] — Comments on Proposed Rule— Bank Notes'' in the email subject line.
- *Fax:* (703) 518–6319. Use the subject line described above for email.
- *Mail:* Address to Gerard Poliquin, Secretary of the Board, National Credit Union Administration, 1775 Duke Street, Alexandria, Virginia 22314–3428.
- *Hand Delivery/Courier:* Same as mail address.

**FOR FURTHER INFORMATION CONTACT:** John Nilles, Senior Capital Markets Specialist, Office of Examination and Insurance, at the above address or telephone (703) 518–6360; or Justin M. Anderson, Senior Staff Attorney, Office of General Counsel, at the above address or telephone (703) 518–6540.

**SUPPLEMENTARY INFORMATION:**

### Table of Contents

I. Background
II. Proposed Amendments
III. Regulatory Procedures

### I. Background

By NCUA regulation, bank notes with original weighted average maturities of less than 5 years are permissible investments for FCUs.[1] The authority for FCUs to invest in these bank notes is derived from the provision of the Federal Credit Union Act (the Act) that permits FCUs to make deposits in, among other things, national and state banks. The Act does not provide authority for FCUs to purchase bank notes that are not deposits. The Act, however, does not define ''deposit.'' NCUA's long-standing policy has been to use the definition of deposit in Regulation D. Regulation D provides, in relevant part, that a liability of a depository institution can be a ''deposit'' if, among other things: (1) It is insured; (2) it is not subordinated to the claims of depositors; and (3) it has a weighted average maturity of less than five years.[2] The Board notes that the third prong of the above test does not include the word ''original.''

When the Board first added ''bank notes'' as a permissible investment to its investment regulation, Part 703, the Board noted in the preamble to that proposed rule that it was codifying the position NCUA had taken in previously issued legal opinions on the topic.[3] Those legal opinions articulated NCUA's policy of using the Regulation D definition of ''deposit'' and interpreting ''weighted average maturity'' as being the *original* weighted average maturity.[4] While this interpretation made it easier for FCUs to calculate the weighted average maturity,[5] the Board is aware that this may now be unintentionally burdensome to FCUs by limiting the offerings in which FCUs may invest. As such, the Board proposes to remove the word ''original'' from the maturity requirement and thereby more closely align NCUA's requirements regarding bank notes with Regulation D.

### II. Proposed Amendments

This proposed rule will amend the maturity requirement for bank notes to be permissible investments for FCUs by removing the word ''original'' from the current requirement that bank notes have ''original weighted average maturities of less than 5 years.'' As noted, this will more closely align NCUA's investment restrictions with the definition of ''deposit'' in Regulation D. This proposed rule also will provide FCUs with some measure of regulatory relief. By removing the word ''original,'' which ties the bank note's maturity to its original date of issuance, FCUs will be permitted to select from a much larger pool of possible bank note offerings. Expanding the list of permissible offerings will result in: (1) Cheaper execution prices, as the ''less than 5 years'' element resulted in those bank notes often selling at a premium; (2) flexibility for FCUs to purchase bank notes that were originally issued[6] with maturities greater than 5 years; and (3) FCUs being able to spend less time and effort in finding suitable offerings.

Further, removing the word ''original'' will not pose any safety or soundness concerns. Safety and soundness concerns generally apply to an FCU's overall maturity risk on a portfolio-wide basis and not to any one investment. If this rule is finalized as proposed, FCUs would be permitted to purchase bank notes that had original maturities greater than 5 years but have *remaining* maturities of *less than* 5 years.

The Board is issuing this proposal with a 30-day comment period rather than its traditional 60-day comment period. The shortened period reflects the simplicity of the proposed amendment and also enables the Board to provide expedited regulatory relief in this area.

[1] 12 CFR 703.14(f)(5).

[2] 12 CFR 204.2(a)(1)(vii)(C).

[3] 62 FR 32989, 32998 (June 18, 1997).

[4] *See* OGC Ops. 96–0625 (July 22, 1996) and 02–0830 (Dec. 4, 2002).

[5] *Id.*

[6] Under this proposal FCUs could purchase a bank note that was originally issued with a maturity longer than five years, provided that, at the time of purchase, the bank note has a remaining maturity of five years or less.

## III. Regulatory Procedures

*1. Regulatory Flexibility Act*

The Regulatory Flexibility Act requires NCUA to prepare an analysis of any significant economic impact a regulation may have on a substantial number of small entities (primarily those under $50 million in assets).[7] This proposed rule will have a minimal economic impact on credit unions as bank notes are just one small portion of a typical investment portfolio. Accordingly, NCUA certifies the rule will not have a significant economic impact on a substantial number of small credit unions.

*2. Paperwork Reduction Act*

The Paperwork Reduction Act of 1995 (PRA) applies to rulemakings in which an agency by rule creates a new paperwork burden or increases an existing burden.[8] For purposes of the PRA, a paperwork burden may take the form of a reporting or recordkeeping requirement, both referred to as information collections. This proposed rule creates new investment options for FCUs but will not create any new burdens or increase any existing burdens. Therefore, a PRA analysis is not required.

*3. Executive Order 13132*

Executive Order 13132 encourages independent regulatory agencies to consider the impact of their actions on state and local interests. NCUA, an independent regulatory agency as defined in 44 U.S.C. 3502(5), voluntarily complies with the executive order to adhere to fundamental federalism principles. The proposed rule does not have substantial direct effects on the states, on the relationship between the national government and the states, or on the distribution of power and responsibilities among the various levels of government. NCUA has, therefore, determined that this proposal does not constitute a policy that has federalism implications for purposes of the executive order.

*4. Assessment of Federal Regulations and Policies on Families*

NCUA has determined that this proposed rule will not affect family well-being within the meaning of section 654 of the Treasury and General Government Appropriations Act, 1999, Public Law 105–277, 112 Stat. 2681 (1998).

[7] 5 U.S.C. 603(a); 12 U.S.C. 1787(c)(1).

[8] 44 U.S.C. 3507(d); 5 CFR part 1320.

**List of Subjects in 12 CFR Part 703**

Credit unions, Investments.

By the National Credit Union Administration Board on October 15, 2015.

**Gerard Poliquin,**

*Secretary of the Board.*

For the reasons discussed above, the National Credit Union Administration proposes to amend 12 CFR part 703 as follows:

## PART 703—INVESTMENT AND DEPOSIT ACTIVITIES

■ 1. The authority citation for part 703 continues to read as follows:

**Authority:** 12 U.S.C. 1757(7), 1757(8), and 1757(15).

**§ 703.14 [Amended]**

■ 2. Amend § 703.14(f)(5) by removing the word ''original''.

[FR Doc. 2015–26788 Filed 10–21–15; 8:45 am]

BILLING CODE 7535–01–P

---

## DEPARTMENT OF THE INTERIOR

### Office of Surface Mining Reclamation and Enforcement

### 30 CFR Part 946

**[SATS No. VA–127–FOR; Docket ID: OSM–2015–0003; S1D1S SS08011000 SX064A000 167S180110; S2D2S SS08011000 SX064A000 16XS501520]**

### Virginia Regulatory Program

**AGENCY:** Office of Surface Mining Reclamation and Enforcement, Interior.

**ACTION:** Proposed rule; public comment period and opportunity for public hearing on proposed amendment.

**SUMMARY:** The Office of Surface Mining Reclamation and Enforcement (OSMRE), is announcing receipt of a proposed amendment to the Virginia regulatory program (the Virginia program) under the Surface Mining Control and Reclamation Act of 1977 (SMCRA or the Act). Through this proposed amendment, the State seeks to revise the Virginia Coal Surface Mining Reclamation Regulations (the State regulations) in light of legislative changes made by the General Assembly of Virginia. If approved, the proposed amendment would incorporate these legislative changes into the approved State program. Additionally, the State regulations would be amended to revise the language of the public participation regulations to clarify proof of publication, remove the self-bonding instrument, and remove duplicate pool bond regulations already addressed under the Code of Virginia.

This document gives the times and locations that the Virginia program and this proposed amendment to that program are available for your inspection, the comment period during which you may submit written comments on the amendment, and the procedures that we will follow for the public hearing, if one is requested.

**DATES:** We will accept written comments on this amendment until 4:00 p.m., Eastern Standard Time (E.S.T.), November 23, 2015. If requested, we will hold a public hearing on the amendment on November 16, 2015. We will accept requests to speak at a hearing until 4:00 p.m., E.S.T. on November 6, 2015.

**ADDRESSES:** You may submit comments, identified by SATS No. VA–127–FOR, by any of the following methods:

- Mail/Hand Delivery: Mr. Earl Bandy, Field Office Director, Knoxville Field Office, Office of Surface Mining Reclamation and Enforcement, 710 Locust Street, 2nd Floor, Knoxville, Tennessee 37902.
- Federal eRulemaking Portal: *http://www.regulations.gov.* Follow the instructions for submitting comments.

*Instructions:* All submissions received must include the agency name and docket number for this rulemaking. For detailed instructions on submitting comments and additional information on the rulemaking process, see the ''Public Comment Procedures'' heading of the **SUPPLEMENTARY INFORMATION** section of this document.

*Docket:* For access to the docket to review copies of the Virginia program, this amendment, a listing of any scheduled public hearings, and all written comments received in response to this document, you must go to the address listed below during normal business hours, Monday through Friday, excluding holidays. You may receive one free copy of the amendment by contacting OSMRE's Knoxville Field Office or the full text of the program amendment is available for you to read at *www.regulations.gov.*

Mr. Earl Bandy, Field Office Director, Knoxville Field Office, Office of Surface Mining Reclamation and Enforcement, 710 Locust Street, 2nd Floor, Knoxville, Tennessee 37902, Telephone: (865) 545–4103 ext 186, Email: *ebandy@osmre.gov.*

In addition, you may review a copy of the amendment during regular business hours at the following location:

Mr. Harve A. Mooney, Legal Services Officer, Virginia Department of Mines, Minerals and Energy, 3405 Mountain Empire Road, Big Stone Gap, Virginia

24219, Telephone: (276) 523–8271, Email: *harve.mooney@dmme.virginia.gov.*

**FOR FURTHER INFORMATION CONTACT:** Mr. Earl Bandy, Field Office Director, Knoxville Field Office. Telephone: (865) 545–4103 ext 186. Email: *ebandy@osmre.gov.*

**SUPPLEMENTARY INFORMATION:**

I. Background on the Virginia Program
II. Description of the Proposed Amendment
III. Public Comment Procedures
IV. Procedural Determinations

## I. Background on the Virginia Program

Section 503(a) of the Act permits a State to assume primacy for the regulation of surface coal mining and reclamation operations on non-Federal and non-Indian lands within its borders by demonstrating that its program includes, among other things, ''. . . State law which provides for the regulation of surface coal mining and reclamation operations in accordance with the requirements of this Act . . .; and rules and regulations consistent with regulations issued by the Secretary pursuant to this Act.'' *See* 30 U.S.C. 1253(a)(1) and (7). On the basis of these criteria, the Secretary of the Interior conditionally approved the Virginia program on December 15, 1981. You can find background information on the Virginia program, including the Secretary's findings, the disposition of comments, and conditions of approval, in the December 15, 1981, **Federal Register** (46 FR 61088). You can also find later actions concerning the Virginia program and program amendments at 30 CFR 946.12, 946.13, and 946.15.

## II. Description of the Proposed Amendment

By letter dated June 12, 2015 (Administrative Record No. VA 2024), the Virginia Department of Mines, Minerals and Energy (VADMME) sent us an amendment to its program under SMCRA (30 U.S.C. 1201 *et seq.*).

At the VADMME's request, an actuarial group performed an audit of the Virginia Coal Surface Mining Reclamation Fund (the Fund). In evaluation year 2013, the actuary group provided a final report (Administrative Record No. VA 2022) with recommendations to improve the financial soundness of the Fund. In an effort to improve the operation of the Fund, the General Assembly of Virginia enacted legislation to amend certain provisions of the Virginia Coal Surface Mining Control and Reclamation Act of 1979 (VASMCRA). *See* 2014 Bill Text VA H.B. 710. In its submission, VADMME provided us with a copy of House Bill 710 (H.B. 710) enacted March 5, 2014 (Administrative Record No. VA 2021), amending the Code of Virginia at Va. Code Ann. §§ 45.1–241, 45.1–270.3, and 45.1–270.4. The enactment of H.B. 710 revised the coal tax structure to collect the tax for all time periods of operation, increased the Fund balance cap from $2 million to $20 million, and removed an applicant's ability to submit its own bond without separate surety, thereby removing the self-bonding option.

Accordingly, VADMME now seeks to amend its State program to reflect the VASMCRA changes made through H.B. 710. VADMME's proposed changes to its State regulations are grouped into three categories for the purpose of this proposed rule notice and summarized below.

### *1. Removal of Duplicative Pool Bond Requirements Under Part 801 of the State Regulations*

VADMME proposes to amend its State program by removing certain duplicate regulations for the pool bond because it states that these items are already addressed in the amended VASMCRA at Va. Code Ann. § 45.1–241.

VADMME proposes to remove, in whole, the State regulations at 4 VAC 25–130–801.11, 801.14, and 801.16, which address participation in the pool bond fund, the reclamation tax, and reinstatement to the pool bond fund.

The proposed amendment would amend 4 VAC 25–130–801.12 entitled ''Entrance fee and bond'' by removing a majority of the language in subsection (a), and would delete subsections (d) and (g) of this regulations. Additionally, VADMME's proposed amendment would remove subsection (c) of this regulation since it references self-bonding, which is no longer permitted by the State as addressed in a separate category below. Approval of these proposed modifications would result in the renumbering of the remaining subsections.

As VADMME seeks to remove section 801.14 of the State regulations, the proposed revisions to 4 VAC 25–130–801.15, entitled ''Collection of the reclamation tax and penalties for non-payment'', entail an amended reference to § 45.1–270.4 of the Code of Virginia within subsections (b) and (d). A minor revision is also proposed at subsection (a) to update the point of contact for the Fund tax reporting form.

### *2. Revisions to the Public Participation and Proof of Publication Language Referenced in the State Regulations*

VADMME proposes to revise the public participation language referenced in 4 VAC 25–130–772.12, 778.21, and 800.40, to be consistent with the corresponding Federal regulations and to clarify proof of publication requirements.

The proposed amendment would revise the public notice language in subsection (c)(1) of 4 VAC 25–130–772.12, entitled ''Permit requirements for exploration removing more than 250 tons of coal, or occurring on lands designated as unsuitable for surface coal mining operations'' and the language in 4 VAC 25–130–778.21, entitled ''Proof of publication'' to be more consistent with the language provided in the Federal regulations at 30 CFR 772.12 and 778.21. The revised language would clarify that the required proof of publication shall be made a part of a subsequent submittal after the last date of publication prior to approval.

Additionally, the proposed amendment would revise the language in 4 VAC 25–130–800.40, entitled ''Requirements to release performance bonds'' referencing public notice and proof of publication required for bond release applications. VADMME also proposes to create a new subsection by moving language from 4 VAC 25–130–800.40(a)(2), discussing the permittee's duty to submit copies of notices sent to those within the locality as part of the bond release application, into a new subsection (a)(3). The existing subsection (a)(3) would be renumbered to (a)(4).

### *3. Removal of the Self-Bonding and Escrow Bonding Options*

In response to changes made to the Code of Virginia through the enactment of H.B. 710, VADMME proposes to remove the self-bonding instrument in an effort to improve the financial soundness of the Fund. As definitions associated with self-bonding procedures, VADMME also seeks to remove the definitions of ''Self-bonding'', ''Cognovit note'', and ''Indemnity agreement'' currently provided under 4 VAC 25–130–700.5. The corresponding Federal regulation for this section is 30 CFR 800.5.

Furthermore, VADMME proposes to remove the provision allowing for Escrow bonding, outlined at 4 VAC 25–130–800.23, to reflect changes in the bonding requirements in the Code of Virginia. This type of bonding, in addition to the self-bonding option,

would no longer be allowed under the proposed amendment.

The full text of the program amendment is available for you to read at the locations listed above under **ADDRESSES** or at *www.regulations.gov.*

**III. Public Comment Procedures**

Under the provisions of 30 CFR 732.17(h), we are seeking your comments on whether the amendment satisfies the applicable program approval criteria of 30 CFR 732.15. If we approve the amendment, it will become part of the State program.

*Electric or Written Comments*

If you submit written or electronic comments on the proposed rule during the 30-day comment period, they should be specific, confined to issues pertinent to the proposed regulations, and explain the reason for any recommended change(s). We appreciate any and all comments, but those most useful and likely to influence decisions on the final regulations will be those that either involve personal experience or include citations to and analyses of SMCRA, its legislative history, its implementing regulations, case law, other pertinent State or Federal laws or regulations, technical literature, or other relevant publications.

We cannot ensure that comments received after the close of the comment period (see **DATES**) or sent to an address other than those listed (see **ADDRESSES**) will be included and considered in the docket for this rulemaking.

*Public Availability of Comments*

Before including your address, phone number, email address, or other personal identifying information in your comment, you should be aware that your entire comment including your personal identifying information, may be made publicly available at any time. While you can ask us in your comment to withhold your personal identifying information from public review, we cannot guarantee that we will be able to do so.

*Public Hearing*

If you wish to speak at the public hearing, contact the person listed under **FOR FURTHER INFORMATION CONTACT** by 4:00 p.m., E.S.T. on November 6, 2015. If you are disabled and need reasonable accommodations to attend a public hearing, contact the person listed under **FOR FURTHER INFORMATION CONTACT**. We will arrange the location and time of the hearing with those persons requesting the hearing. If no one requests an opportunity to speak, we will not hold a hearing.

To assist the transcriber and ensure an accurate record, we request, if possible, that each person who speaks at the public hearing provide us with a written copy of his or her comments. The public hearing will continue on the specified date until everyone scheduled to speak has been given an opportunity to be heard. If you are in the audience and have not been scheduled to speak and wish to do so, you will be allowed to speak after those who have been scheduled. We will end the hearing after everyone scheduled to speak and others present in the audience who wish to speak, have been heard.

*Public Meeting*

If only one person requests an opportunity to speak, we may hold a public meeting rather than a public hearing. If you wish to meet with us to discuss the amendment, please request a meeting by contacting the person listed under **FOR FURTHER INFORMATION CONTACT**. All such meetings are open to the public and, if possible, we will post notices of meetings at the locations listed under **ADDRESSES**. We will make a written summary of each meeting a part of the administrative record.

**IV. Procedural Determinations**

*Executive Order 12866—Regulatory Planning and Review*

This rule is exempted from review by the Office of Management and Budget (OMB) under Executive Order 12866.

*Other Laws and Executive Orders Affecting Rulemaking*

When a State submits a program amendment to OSMRE for review, our regulations at 30 CFR 732.17(h) require us to publish a notice in the **Federal Register** indicating receipt of the proposed amendment, its text or a summary of its terms, and an opportunity for public comment. We conclude our review of the proposed amendment after the close of the public comment period and determine whether the amendment should be approved, approved in part, or not approved. At that time, we will also make the determinations and certifications required by the various laws and executive orders governing the rulemaking process and include them in the final rule.

**List of Subjects in 30 CFR Part 946**

Intergovernmental relations, Surface mining, Underground mining.

Dated: July 13, 2015.

**Thomas D. Shope,**

*Regional Director, Appalachian Region.*

[FR Doc. 2015–26842 Filed 10–21–15; 8:45 am]

BILLING CODE 4310–05–P

## ENVIRONMENTAL PROTECTION AGENCY

## 40 CFR Part 56

**[EPA–HQ–OAR–2014–0616; FRL–9936–11–OAR]**

**RIN 2060–AS53**

## Amendments to Regional Consistency Regulations

**AGENCY:** Environmental Protection Agency (EPA).

**ACTION:** Proposed rule; reopening of comment period.

**SUMMARY:** On August 19, 2015, the Environmental Protection Agency (EPA) proposed revisions to its Regional Consistency regulations. The EPA is reopening the comment period on the proposed rule that closed on October 19, 2015. The EPA received a single letter from 16 trade and business organizations requesting additional time to review and comment on the proposed rule revisions.

**DATES:** The public comment period for the proposed rule published in the **Federal Register** on August 19, 2015 (80 FR 50250), is being reopened. Written comments must be received on or before November 3, 2015.

**ADDRESSES:** Submit your comments, identified by Docket ID No. EPA–HQ–OAR–2014–0616, to the *Federal eRulemaking Portal: http://www.regulations.gov*. Follow the online instructions for submitting comments. Once submitted, comments cannot be edited or withdrawn. The EPA may publish any comment received to its public docket. Do not submit electronically any information you consider to be Confidential Business Information (CBI) or other information whose disclosure is restricted by statute. If you need to include CBI as part of your comment, please visit *http://www.epa.gov/dockets/comments.html* for instructions. Multimedia submissions (audio, video, etc.) must be accompanied by a written comment. The written comment is considered the official comment and should include discussion of all points you wish to make. For additional submission methods, the full EPA public comment policy, and general guidance on making effective comments, please visit *http://www.epa.gov/dockets/comments.html*.

**FOR FURTHER INFORMATION CONTACT:** For additional information, contact Greg Nizich, Air Quality Policy Division, Office of Air Quality Planning and Standards (C504–03), Environmental Protection Agency, Research Triangle Park, North Carolina 27711; telephone number (919) 541–3078; fax number (919) 541–5509; email address: *nizich.greg@epa.gov*.

**SUPPLEMENTARY INFORMATION:** After considering the request received from 16 trade and business organizations to extend the public comment period, the EPA has decided to reopen the public comment period until November 3, 2015. This extension will help ensure that the public has additional time to review the proposed changes to the existing rule.

Dated: October 16, 2015.

**Mary E. Henigin,**

*Acting Director, Office of Air Quality Planning and Standards.*

[FR Doc. 2015–26942 Filed 10–21–15; 8:45 am]

**BILLING CODE 6560–50–P**

---

## DEPARTMENT OF HEALTH AND HUMAN SERVICES

### Centers for Medicare & Medicaid Services

### 42 CFR Part 600

**[CMS–2396–PN]**

**RIN 0938–ZB21**

## Basic Health Program; Federal Funding Methodology for Program Years 2017 and 2018

**AGENCY:** Centers for Medicare & Medicaid Services (CMS), HHS.

**ACTION:** Proposed methodology.

**SUMMARY:** This document provides the methodology and data sources necessary to determine federal payment amounts made in program years 2017 and 2018 to states that elect to establish a Basic Health Program under the Affordable Care Act to offer health benefits coverage to low-income individuals otherwise eligible to purchase coverage through Affordable Insurance Marketplaces.

**DATES:** To be assured consideration, comments must be received at one of the addresses provided below, no later than 5 p.m. on November 23, 2015.

**ADDRESSES:** In commenting, refer to file code CMS–2396–PN. Because of staff and resource limitations, we cannot accept comments by facsimile (FAX) transmission.

You may submit comments in one of four ways (please choose only one of the ways listed):

1. *Electronically.* You may submit electronic comments on this regulation to *http://www.regulations.gov.* Follow the ''Submit a comment'' instructions.

2. *By regular mail.* You may mail written comments to the following address ONLY: Centers for Medicare & Medicaid Services, Department of Health and Human Services, Attention: CMS 2396–PN, P.O. Box 8016, Baltimore, MD 21244–8016.

Please allow sufficient time for mailed comments to be received before the close of the comment period.

3. *By express or overnight mail.* You may send written comments to the following address only: Centers for Medicare & Medicaid Services, Department of Health and Human Services, Attention: CMS–2396–PN, Mail Stop C4–26–05, 7500 Security Boulevard, Baltimore, MD 21244–1850.

4. *By hand or courier.* Alternatively, you may deliver (by hand or courier) your written only to the following addresses:

a. For delivery in Washington, DC—Centers for Medicare & Medicaid Services, Department of Health and Human Services, Room 445–G, Hubert H. Humphrey Building, 200 Independence Avenue SW., Washington, DC 20201.

(Because access to the interior of the Hubert H. Humphrey Building is not readily available to persons without Federal government identification, commenters are encouraged to leave their comments in the CMS drop slots located in the main lobby of the building. A stamp-in clock is available for persons wishing to retain a proof of filing by stamping in and retaining an extra copy of the comments being filed.)

b. For delivery in Baltimore, MD—Centers for Medicare & Medicaid Services, Department of Health and Human Services, 7500 Security Boulevard, Baltimore, MD 21244–1850.

If you intend to deliver your comments to the Baltimore address, call telephone number (410) 786–7195 in advance to schedule your arrival with one of our staff members.

Comments erroneously mailed to the addresses indicated as appropriate for hand or courier delivery may be delayed and received after the comment period.

*Submission of comments on paperwork requirements.* You may submit comments on this document's paperwork requirements by following the instructions at the end of the ''Collection of Information Requirements'' section in this document.

For information on viewing public comments, see the beginning of the **SUPPLEMENTARY INFORMATION** section.

**FOR FURTHER INFORMATION CONTACT:** Christopher Truffer, (410) 786–1264; Stephanie Kaminsky (410) 786–4653.

**SUPPLEMENTARY INFORMATION:**

*Inspection of Public Comments:* All comments received before the close of the comment period are available for viewing by the public, including any personally identifiable or confidential business information that is included in a comment. We post all comments received before the close of the comment period on the following Web site as soon as possible after they have been received: *http://www.regulations.gov.* Follow the search instructions on that Web site to view public comments.

Comments received timely will also be available for public inspection as they are received, generally beginning approximately 3 weeks after publication of a document, at the headquarters of the Centers for Medicare & Medicaid Services, 7500 Security Boulevard, Baltimore, Maryland 21244, Monday through Friday of each week from 8:30 a.m. to 4 p.m. To schedule an appointment to view public comments, phone 1–800–743–3951.

### Table of Contents

I. Background
II. Provisions of the Proposed Methodology
  A. Overview of the Funding Methodology and Calculation of the Payment Amount
  B. Federal BHP Payment Rate Cells
  C. Sources and State Data Considerations
  D. Discussion of Specific Variables Used in Payment Equations
  E. Adjustments for American Indians and Alaska Natives
  F. State Option to Use 2016 or 2017 QHP Premiums for BHP Payments
  G. State Option to Include Retrospective State-Specific Health Risk Adjustment in Certified Methodology
  H. Example Application of the BHP Funding Methodology
III. Collection of Information Requirements
IV. Response to Comments
V. Regulatory Impact Statement
  A. Overall Impact
  B. Unfunded Mandates Reform Act
  C. Regulatory Flexibility Act
  D. Federalism

### I. Background

Section 1331 of the Patient Protection and Affordable Care Act (Pub. L. 111–148, enacted on March 23, 2010), as amended by the Health Care and Education Reconciliation Act of 2010 (Pub. L. 111–152, enacted on March 30, 2010) (collectively referred as the Affordable Care Act) provides states with an option to establish a Basic Health Program (BHP). In the states that

elect to operate BHP, BHP will make affordable health benefits coverage available for individuals under age 65 with household incomes between 133 percent and 200 percent of the federal poverty level (FPL) who are not otherwise eligible for Medicaid, the Children's Health Insurance Program (CHIP), or affordable employer-sponsored coverage, or for individuals whose income is below these levels but are lawfully present non-citizens ineligible for Medicaid. (For those states that have expanded Medicaid coverage under section 1902(a)(10)(A)(i)(VIII) of the Social Security Act (the Act), the lower income threshold for BHP eligibility is effectively 138 percent due to the application of a required 5 percent income disregard in determining the upper limits of Medicaid income eligibility (section 1902(e)(14)(I) of the Act).

BHP provides another option for states in providing affordable health benefits to individuals with incomes in the ranges described above. States may find BHP a useful option for several reasons, including the ability to potentially coordinate standard health plans in BHP with their Medicaid managed care plans, or to potentially reduce the costs to individuals by lowering premiums or cost-sharing requirements.

Federal funding will be available for BHP based on the amount of PTC and cost-sharing reductions (CSRs) that BHP enrollees would have received had they been enrolled in QHPs through Marketplaces. These funds are paid to the states through trust funds dedicated to BHP, and the states then administer the payments to standard health plans within BHP.

In the March 12, 2014 **Federal Register** (79 FR 14112), we published a final rule entitled the ''Basic Health Program: State Administration of Basic Health Programs; Eligibility and Enrollment in Standard Health Plans; Essential Health Benefits in Standard Health Plans; Performance Standards for Basic Health Programs; Premium and Cost Sharing for Basic Health Programs; Federal Funding Process; Trust Fund and Financial Integrity'' (hereinafter referred to as the BHP final rule) implementing section 1331 of the Affordable Care Act), which directs the establishment of BHP. The BHP final rule establishes the standards for state and federal administration of BHP, including provisions regarding eligibility and enrollment, benefits, cost-sharing requirements and oversight activities. While the BHP final rule codifies the overall statutory requirements and basic procedural framework for the funding methodology, it does not contain the specific information necessary to determine federal payments. We anticipated that the methodology would be based on data and assumptions that would reflect ongoing operations and experience of BHP programs as well as the operation of the Marketplaces. For this reason, the BHP final rule indicated that the development and publication of the funding methodology, including any data sources, would be addressed in a separate annual BHP Payment Notice.

In the BHP final rule, we specified that the BHP Payment Notice process would include the annual publication of both a proposed and final BHP Payment Notice. The proposed BHP Payment Notice would be published in the **Federal Register** each October, and would describe the proposed methodology for the upcoming BHP program year, including how the Secretary considered the factors specified in section 1331(d)(3) of the Affordable Care Act, along with the proposed data sources used to determine the federal BHP payment rates. The final BHP Payment Notice would be published in the **Federal Register** in February, and would include the final BHP funding methodology, as well as the federal BHP payment rates for the next BHP program year. For example, payment rates published in February 2016 would apply to BHP program year 2017, beginning in January 2017. As discussed in section II.C of this proposed methodology, and as referenced in 42 CFR 600.610(b)(2), state data needed to calculate the federal BHP payment rates for the final BHP Payment Notice must be submitted to CMS.

As described in the BHP final rule, once the final methodology has been published, we will only make modifications to the BHP funding methodology on a prospective basis with limited exceptions. The BHP final rule provided that retrospective adjustments to the state's BHP payment amount may occur to the extent that the prevailing BHP funding methodology for a given program year permits adjustments to a state's federal BHP payment amount due to insufficient data for prospective determination of the relevant factors specified in the payment notice. Additional adjustments could be made to the payment rates to correct errors in applying the methodology (such as mathematical errors).

Under section 1331(d)(3)(ii) of the Affordable Care Act, the funding methodology and payment rates are expressed as an amount per eligible individual enrolled in a BHP standard health plan (BHP enrollee) for each month of enrollment. These payment rates may vary based on categories or classes of enrollees. Actual payment to a state would depend on the actual enrollment of individuals found eligible in accordance with a state's certified blueprint eligibility and verification methodologies in coverage through the state BHP. A state that is approved to implement BHP must provide data showing quarterly enrollment of eligible individuals in the various federal BHP payment rate cells. Such data should include the following:

1. Personal identifier;
2. Date of birth;
3. County of residence;
4. Indian status;
5. Family size;
6. Household income;
7. Number of person in household enrolled in BHP;
8. Family identifier;
9. Months of coverage;
10. Plan information; and
11. Any other data required by CMS to properly calculate the payment.

In the February 24, 2015 **Federal Register** (80 FR 9636), we published the final payment methodology entitled ''Basic Health Program; Federal Funding Methodology for Program Year 2016'' (hereinafter referred to as the 2016 payment methodology) that sets forth the methodology that will be used to calculate the federal BHP payments for the 2016 program year.

In this proposed payment notice, we are proposing that the methodology described within be for program years 2017 and 2018 for states that elect to establish a BHP under the Affordable Care Act to offer health benefits coverage to low-income individuals otherwise eligible to purchase coverage through Affordable Insurance Marketplaces. We are proposing that the payment methodology be for 2 years because after 2 years of publishing single year methodologies, few year-to-year changes are needed at this point. If we find, based on additional data that is generated from 2015 operations, that we would like to further analyze enrollment data for another year before finalizing the methodology for 2018, we will only finalize for 2017 and then either finalize later or repropose our payment methodology for 2018.

## II. Provisions of the Proposed Methodology

### *A. Overview of the Funding Methodology and Calculation of the Payment Amount*

Section 1331(d)(3) of the Affordable Care Act directs the Secretary to

consider several factors when determining the federal BHP payment amount, which, as specified in the statute, must equal 95 percent of the value of the PTC and CSRs that BHP enrollees would have been provided had they enrolled in a QHP through an Marketplace. Thus, the proposed BHP funding methodology is designed to calculate the PTC and CSRs as consistently as possible and in general alignment with the methodology used by Marketplaces to calculate the advance payments of the PTC and CSRs, and by the Internal Revenue Service (IRS) to calculate final PTCs. In general, we propose to rely on values for factors in the payment methodology specified in statute or other regulations as available, and we propose to develop values for other factors not otherwise specified in statute, or previously calculated in other regulations, to simulate the values of the PTC and CSRs that BHP enrollees would have received if they had enrolled in QHPs offered through an Marketplace. In accordance with section 1331(d)(3)(A)(iii) of the Affordable Care Act, the final funding methodology must be certified by the Chief Actuary of CMS, in consultation with the Office of Tax Analysis of the Department of the Treasury, as having met the requirements of section 1331(d)(3)(A)(ii) of the Affordable Care Act.

Section 1331(d)(3)(A)(ii) of the Affordable Care Act specifies that the payment determination shall take into account all relevant factors necessary to determine the value of the premium tax credits and cost-sharing reductions that would have been provided to eligible individuals, including the age and income of the enrollee, whether the enrollment is for self-only or family coverage, geographic differences in average spending for health care across rating areas, the health status of the enrollee for purposes of determining risk adjustment payments and reinsurance payments that would have been made if the enrollee had enrolled in a qualified health plan through an Marketplace, and whether any reconciliation of PTC and CSR would have occurred if the enrollee had been so enrolled. This proposed payment methodology takes each of these factors into account. We propose a methodology that is the same as the 2016 payment methodology, with minor changes to update the value of certain factors used to calculate the payments, but with no changes in methods. These updates are explained in later sections of this notice. Accordingly, while this notice uses the term ''proposed methodology'' throughout, the methodology proposed is essentially identical to that already in place for the BHP.

In this proposed methodology, we are proposing to establish a payment methodology for the 2017 and 2018 BHP program years. The same methodology would apply for both years, but the values of a number of factors would be updated for 2018, as noted throughout this notice. We reserve the right to specify a different methodology for 2018.

We propose that the total federal BHP payment amount would be based on multiple rate cells in each state. Each rate cell would represent a unique combination of age range, geographic area, coverage category (for example, self-only or two-adult coverage through BHP), household size, and income range as a percentage of FPL. Thus, there would be distinct rate cells for individuals in each coverage category within a particular age range who reside in a specific geographic area and are in households of the same size and income range. We would develop BHP payment rates that would be consistent with those states' rules on age rating. Thus, in the case of a state that does not use age as a rating factor on the Marketplace, the BHP payment rates would not vary by age.

The proposed rate for each rate cell would be calculated in two parts. The first part (as described in Equation (1)) would equal 95 percent of the estimated PTC that would have been paid if a BHP enrollee in that rate cell had instead enrolled in a QHP in the Marketplace. The second part (as described in Equation (2)) would equal 95 percent of the estimated CSR payment that would have been made if a BHP enrollee in that rate cell had instead enrolled in a QHP in the Marketplace. These 2 parts would be added together and the total rate for that rate cell would be equal to the sum of the PTC and CSR rates.

We propose that Equation (1) would be used to calculate the estimated PTC for eligible individuals enrolled in the BHP in each rate cell and Equation (2) would be used to calculate the estimated CSR payments for eligible individuals enrolled in the BHP in each rate cell. (Indeed, we note that throughout the payment notice, when we refer to enrollees and enrollment data, we mean data regarding individuals who are enrolled in the BHP who have been found eligible for the BHP using the eligibility and verification requirements that are applicable in the state's most recent certified Blueprint.) By applying the equations separately to rate cells based on age, income and other factors, we would effectively take those factors into account in the calculation. In addition, the equations would reflect the estimated experience of individuals in each rate cell if enrolled in coverage through the Marketplace, taking into account additional relevant variables. Each of the variables in the equations is defined in this section, and further detail is provided later in this section of the payment notice.

In addition, we describe how we propose to calculate the adjusted reference premium (described later in this section of the payment notice) that is used in Equations (1) and (2). This is defined in Equation (3a) and Equation (3b).

Equation 1: Estimated PTC by Rate Cell

We propose that the estimated PTC, on a per enrollee basis, would continue to be calculated for each rate cell for each state based on age range, geographic area, coverage category, household size, and income range. The PTC portion of the rate would be calculated in a manner consistent with the methodology used to calculate the PTC for persons enrolled in a QHP, with 3 adjustments. First, the PTC portion of the rate for each rate cell would represent the mean, or average, expected PTC that all persons in the rate cell would receive, rather than being calculated for each individual enrollee. Second, the reference premium used to calculate the PTC (described in more detail later in the section) would be adjusted for BHP population health status, and in the case of a state that elects to use 2016 premiums for the basis of the BHP federal payment, for the projected change in the premium from the 2016 to 2017, to which the rates announced in the final payment methodology would apply. These adjustments are described in Equation (3a) and Equation (3b). Third, the PTC would be adjusted prospectively to reflect the mean, or average, net expected impact of income reconciliation on the combination of all persons enrolled in BHP; this adjustment, as described in section II.D.5. of this proposed methodology, would account for the impact on the PTC that would have occurred had such reconciliation been performed. Finally, the rate is multiplied by 95 percent, consistent with section 1331(d)(3)(A)(i) of the Affordable Care Act. We note that in the situation where the average income contribution of an enrollee would exceed the adjusted reference premium, we would calculate the PTC to be equal to 0 and would not allow the value of the PTC to be negative.

We propose using Equation (1) to calculate the PTC rate, consistent with the methodology described above:

$$\textbf{Equation (1): } PTC_{a,g,c,h,i} = \left[ ARP_{a,g,c} - \frac{\sum_j I_{h,i,j} \times PTCF_{h,i,j}}{n} \right] \times IRF \times 95\%$$

$PTC_{a,g,c,h,i}$ = Premium tax credit portion of BHP payment rate
$a$ = Age range
$g$ = Geographic area
$c$ = Coverage status (self-only or applicable category of family coverage) obtained through BHP
$h$ = Household size
$i$ = Income range (as percentage of FPL)
$ARP_{a,g,c}$ = Adjusted reference premium
$I_{h,i,j}$ = Income (in dollars per month) at each 1 percentage-point increment of FPL
$j$ = $j^{th}$ percentage-point increment FPL
$n$ = Number of income increments used to calculate the mean PTC
$PTCF_{h,i,j}$ = Premium Tax Credit Formula percentage
$IRF$ = Income reconciliation factor

Equation 2: Estimated CSR Payment by Rate Cell

We propose that the CSR portion of the rate would continue to be calculated for each rate cell for each state based on age range, geographic area, coverage category, household size, and income range defined as a percentage of FPL. The CSR portion of the rate would be calculated in a manner consistent with the methodology used to calculate the CSR advance payments for persons enrolled in a QHP, as described in the ''HHS Notice of Benefit and Payment Parameters for 2016'' final rule published in the February 27, 2015 **Federal Register** (80 FR 10749), with 3 principal adjustments. (We further propose a separate calculation that includes different adjustments for American Indian/Alaska Native BHP enrollees, as described in section II.D.1 of this proposed methodology.) For the first adjustment, the CSR rate, like the PTC rate, would represent the mean expected CSR subsidy that would be paid on behalf of all persons in the rate cell, rather than being calculated for each individual enrollee. Second, this calculation would be based on the adjusted reference premium, as described in section II.A.3. of this proposed methodology. Third, this equation uses an adjusted reference premium that reflects premiums charged to non-tobacco users, rather than the actual premium that is charged to tobacco users to calculate CSR advance payments for tobacco users enrolled in a QHP. Accordingly, we propose that the equation include a tobacco rating adjustment factor that would account for BHP enrollees' estimated tobacco-related health costs that are outside the premium charged to non-tobacco-users. Finally, the rate would be multiplied by 95 percent, as provided in section 1331(d)(3)(A)(i) of the Affordable Care Act.

We propose using Equation (2) to calculate the CSR rate, consistent with the methodology described above:

$$\textbf{Equation (2): } CSR_{a,g,c,h,i} = \frac{ARP_{a,g,c} \times TRAF \times FRAC}{AV} \times IUF_{h,i} \times \Delta AV_{h,i} \times 95\%$$

$CSR_{a,g,c,h,i}$ = Cost-sharing reduction subsidy portion of BHP payment rate
$a$ = Age range
$g$ = Geographic area
$c$ = Coverage status (self-only or applicable category of family coverage) obtained through BHP
$h$ = Household size
$i$ = Income range (as percentage of FPL)
$ARP_{a,g,c}$ = Adjusted reference premium
$TRAF$ = Tobacco rating adjustment factor
$FRAC$ = Factor removing administrative costs
$AV$ = Actuarial value of plan (as percentage of allowed benefits covered by the applicable QHP without a cost-sharing reduction subsidy)
$IUF_{h,i}$ = Induced utilization factor
$\Delta AV_{h,i}$ = Change in actuarial value (as percentage of allowed benefits)

Equation 3a and Equation 3b: Adjusted Reference Premium Variable (Used in Equations 1 and 2)

As part of these calculations for both the PTC and CSR components, we propose to continue to calculate the value of the adjusted reference premium as described below. Consistent with the approach last year, we are proposing to allow states to choose between using the actual 2017 and 2018 QHP premiums or the 2016 and 2017 QHP premiums multiplied by the premium trend factor (for the 2017 and 2018 program years, respectively, and as described in section II.F). Therefore, we are proposing how we would calculate the adjusted reference premium under each option.

In the case of a state that elected to use the reference premium based on the 2017 premiums for the 2017 program year, we propose to calculate the value of the adjusted reference premium as specified in Equation (3a). The adjusted reference premium would be equal to the reference premium, which would be based on the second lowest cost silver plan premium in 2017, multiplied by the BHP population health factor (described in section II.D of this proposed methodology), which would reflect the projected impact that enrolling BHP-eligible individuals in QHPs on an Marketplace would have had on the average QHP premium.

$ARP_{a,g,c}$ = Adjusted reference premium
$a$ = Age range
$g$ = Geographic area
$c$ = Coverage status (self-only or applicable category of family coverage) obtained through BHP
$RP_{a,g,c}$ = Reference premium
$PHF$ = Population health factor

In the case of a state that elected to use the reference premium based on the 2016 premiums for the 2017 program year (as described in section II.F of this proposed methodology), we propose to calculate the value of the adjusted reference premium as specified in Equation (3b). The adjusted reference premium would be equal to the reference premium, which would be based on the second lowest cost silver plan premium in 2016, multiplied by the BHP population health factor (described in section II.D of this proposed methodology), which would reflect the projected impact that enrolling BHP-eligible individuals in QHPs on an Marketplace would have had on the average QHP premium, and by the premium trend factor, which would reflect the projected change in the premium level between 2016 and 2017 (including the estimated impact of changes resulting from the transitional

reinsurance program established in section 1341 of the Affordable Care Act).

$$\textbf{Equation (3b)}: \; ARP_{a,g,c} = RP_{a,g,c} \times PHF \times PTF$$

$ARP_{a,g,c}$ = Adjusted reference premium
$a$ = Age range
$g$ = Geographic area
$c$ = Coverage status (self-only or applicable category of family coverage) obtained through BHP
$RP_{a,g,c}$ = Reference premium
$PHF$ = Population health factor
$PTF$ = Premium trend factor

This methodology would also apply for the 2018 program year, using either actual 2018 QHP premiums or the 2017 QHP premiums multiplied by a premium trend factor.

Equation 4: Determination of Total Monthly Payment for BHP Enrollees in Each Rate Cell

In general, the rate for each rate cell would be multiplied by the number of BHP enrollees in that cell (that is, the number of enrollees that meet the criteria for each rate cell) to calculate the total monthly BHP payment. This calculation is shown in Equation 4.

$$\textbf{Equation (4)}: PMT = \sum \left[ \left( PTC_{a,g,c,h,i} + CSR_{a,g,c,h,i} \right) \times E_{a,g,c,h,i} \right]$$

$PMT$ = Total monthly BHP payment
$PTC_{a,g,c,h,i}$ = Premium tax credit portion of BHP payment rate
$CSR_{a,g,c,h,i}$ = Cost-sharing reduction subsidy portion of BHP payment rate
$E_{a,g,c,h,i}$ = Number of BHP enrollees
$a$ = Age range
$g$ = Geographic area
$c$ = Coverage status (self-only or applicable category of family coverage) obtained through BHP
$h$ = Household size
$i$ = Income range (as percentage of FPL)

*B. Federal BHP Payment Rate Cells*

Consistent with the 2015 and 2016 payment methodologies, we propose that a state implementing BHP provide us an estimate of the number of BHP enrollees it projects will enroll in the upcoming BHP program year, by applicable rate cell, prior to the first quarter and each subsequent quarter of program operations until actual enrollment data is available. Upon our approval of such estimates as reasonable, they would be used to calculate the prospective payment for the first and subsequent quarters of program operation until the state has provided us actual enrollment data. These data would be required to calculate the final BHP payment amount, and make any necessary reconciliation adjustments to the prior quarters' prospective payment amounts due to differences between projected and actual enrollment. Subsequent, quarterly deposits to the state's trust fund would be based on the most recent actual enrollment data submitted to us. Actual enrollment data must be based on individuals enrolled for the quarter submitted who the state found eligible and whose eligibility was verified using eligibility and verification requirements as agreed to by the state in its applicable BHP Blueprint for the quarter that enrollment data is submitted. Procedures will ensure that federal payments to a state reflect actual BHP enrollment during a year, within each applicable category, and prospectively determined federal payment rates for each category of BHP enrollment, with such categories defined in terms of age range, geographic area, coverage status, household size, and income range, as explained above.

We propose requiring the use of certain rate cells as part of the proposed methodology. For each state, we propose using rate cells that separate the BHP population into separate cells based on the 5 factors described as follows:

*Factor 1—Age:* We propose to continue separating enrollees into rate cells by age, using the following unchanged age ranges that capture the widest variations in premiums under HHS's Default Age Curve: [1]

- Ages 0–20.
- Ages 21–34.
- Ages 35–44.
- Ages 45–54.
- Ages 55–64.

*Factor 2—Geographic area:* For each state, we propose separating enrollees into rate cells by geographic areas within which a single reference premium is charged by QHPs offered through the state's Marketplace. Multiple, non-contiguous geographic areas would be incorporated within a single cell, so long as those areas share a common reference premium.[2] This provision would also be unchanged from the current method.

*Factor 3—Coverage status:* We propose to continue separating enrollees into rate cells by coverage status, reflecting whether an individual is enrolled in self-only coverage or persons are enrolled in family coverage through BHP, as provided in section 1331(d)(3)(A)(ii) of the Affordable Care Act. Among recipients of family coverage through BHP, separate rate cells, as explained below, would apply based on whether such coverage involves two adults alone or whether it involves children.

*Factor 4—Household size:* We propose to continue the current

[1] This curve is used to implement the Affordable Care Act's 3:1 limit on age-rating in states that do not create an alternative rate structure to comply with that limit. The curve applies to all individual market plans, both within and outside the Marketplace. The age bands capture the principal allowed age-based variations in premiums as permitted by this curve. More information can be found at *http://www.cms.gov/CCIIO/Resources/Files/Downloads/market-reforms-guidance-2-25-2013.pdf*. Both children and adults under age 21 are charged the same premium. For adults age 21–64, the age bands in this notice divide the total age-based premium variation into the three most equally-sized ranges (defining size by the ratio between the highest and lowest premiums within the band) that are consistent with the age-bands used for risk-adjustment purposes in the HHS-Developed Risk Adjustment Model. For such age bands, see Table 5, ''Age-Sex Variables,'' in HHS-Developed Risk Adjustment Model Algorithm Software, June 2, 2014, *http://www.cms.gov/CCIIO/Resources/Regulations-and-Guidance/Downloads/ra-tables-03-27-2014.xlsx*.

[2] For example, a cell within a particular state might refer to ''County Group 1,'' ''County Group 2,'' etc., and a table for the state would list all the counties included in each such group. These geographic areas are consistent with the geographic areas established under the 2014 Market Reform Rules. They also reflect the service area requirements applicable to qualified health plans, as described in 45 CFR 155.1055, except that service areas smaller than counties are addressed as explained below.

methods for separating enrollees into rate cells by household size that states use to determine BHP enrollees' income as a percentage of the FPL under § 600.320 (Administration, eligibility, essential health benefits, performance standards, service delivery requirements, premium and cost sharing, allotments, and reconciliation; Determination of eligibility for and enrollment in a standard health plan). We are proposing to require separate rate cells for several specific household sizes. For each additional member above the largest specified size, we propose to publish instructions for how we would develop additional rate cells and calculate an appropriate payment rate based on data for the rate cell with the closest specified household size. We propose to publish separate rate cells for household sizes of 1 through 10. In previous methodologies, we stated that we would publish rate cells for household sizes of 1 through 5. We believe that publishing rate cells for larger household sizes would be beneficial to states operating BHP. We have worked with states in 2015 to publish rate cells for household sizes 1 through 10.

*Factor 5—Income:* For households of each applicable size, we propose to continue the current methods for creating separate rate cells by income range, as a percentage of FPL. The PTC that a person would receive if enrolled in a QHP varies by income, both in level and as a ratio to the FPL, and the CSR varies by income as a percentage of FPL. Thus, we propose that separate rate cells would be used to calculate federal BHP payment rates to reflect different bands of income measured as a percentage of FPL. We propose using the following income ranges, measured as a ratio to the FPL:

- 0 to 50 percent of the FPL.
- 51 to 100 percent of the FPL.
- 101 to 138 percent of the FPL.[3]
- 139 to 150 percent of the FPL.
- 151 to 175 percent of the FPL.
- 176 to 200 percent of the FPL.

These rate cells would only be used to calculate the federal BHP payment amount. A state implementing BHP would not be required to use these rate cells or any of the factors in these rate cells as part of the state payment to the standard health plans participating in BHP or to help define BHP enrollees' covered benefits, premium costs, or out-of-pocket cost-sharing levels.

We propose using averages to define federal payment rates, both for income ranges and age ranges, rather than varying such rates to correspond to each individual BHP enrollee's age and income level. We believe that the proposed approach will increase the administrative feasibility of making federal BHP payments and reduce the likelihood of inadvertently erroneous payments resulting from highly complex methodologies. We believe that this approach should not significantly change federal payment amounts, since within applicable ranges, the BHP-eligible population is distributed relatively evenly.

The number of factors contributing to rate cells, when combined, can result in over 350,000 rate cells which can increase the complexity when generating quarterly payment amounts. In future years, we will consider whether to combine or eliminate certain rate cells, once we are certain that the effect on payment would be insignificant in the interest of administrative simplification.

### *C. Sources and State Data Considerations*

To the extent possible, we intend to continue to use data submitted to the federal government by QHP issuers seeking to offer coverage through an Marketplace to perform the calculations that determine federal BHP payment cell rates. We propose that the current methodology would not change, but we also propose clarifications regarding the submission of state data in this section.

States operating a State Based Marketplace in the individual market, however, must provide certain data, including premiums for second lowest cost silver plans, by geographic area, for CMS to calculate the federal BHP payment rates in those states. We propose that a State Based Marketplace interested in obtaining the applicable federal BHP payment rates for its state must submit such data accurately, completely, and as specified by CMS, by no later than October 15, 2016, for CMS to calculate the applicable rates for 2017 and by October 15, 2017 for 2018. If additional state data (that is, in addition to the second lowest cost silver plan premium data) are needed to determine the federal BHP payment rate, such data must be submitted in a timely manner, and in a format specified by CMS to support the development and timely release of annual BHP payment notices. The specifications for data collection to support the development of BHP payment rates will be published in CMS guidance and will be available at *http://www.medicaid.gov/Federal-Policy-Guidance/Federal-Policy-Guidance.html.*

States must submit to CMS enrollment data on a quarterly basis and should be technologically prepared to begin submitting data at the start of their BHP. This requirement is necessary for us to implement the payment methodology that is tied to a quarterly reconciliation based on actual enrollment data.

We newly propose 2 additional clarifications regarding state-submitted data. First, for states that have BHP enrollees who do not file federal tax returns (non-filers), the state must develop a methodology which they must submit to CMS as the time of their Blueprint submission to determine the enrollees' household income and household size consistently with Marketplace requirements. We reserve the right to approve or disapprove the state's methodology to determine income and household size for non-filers.

Second, as the federal payments are determined quarterly and the enrollment data is required to be submitted by the states to CMS quarterly, we propose that the quarterly payment would be based on the characteristics of the enrollee at the beginning of the quarter (or their first month of enrollment in BHP in each quarter). Thus, if an enrollee were to experience a change in county of residence, income, household size, or other factors related to the BHP payment determination during the quarter, the payment for the quarter would be based on the data as of the beginning of the quarter. Payments would still be made only for months that the person is enrolled in and eligible for BHP. We do not anticipate that this would have a significant effect on the federal BHP payment. The states must maintain data that are consistent with CMS' verification requirements, including auditable records for each individual enrolled, indicating an eligibility determination and a determination of income and other criteria relevant to the payment methodology as of the beginning of each quarter.

As described in § 600.610 (Secretarial determination of BHP payment amount), the state is required to submit certain data in accordance with this Notice. We require that this data be collected and validated by states operating BHP and that this data be submitted to CMS.

### *D. Discussion of Specific Variables Used in Payment Equations*

1. Reference Premium (RP)

To calculate the estimated PTC that would be paid if individuals enrolled in QHPs through the Marketplace, we must

[3] The three lowest income ranges would be limited to lawfully present immigrants who are ineligible for Medicaid because of immigration status.

calculate a reference premium (RP) because the PTC is based, in part, on the premiums for the applicable second lowest cost silver plan as explained in section II.C.4 of this proposed methodology, regarding the Premium Tax Credit Formula (PTCF). The proposal is unchanged from the current method except to update the reference years, and to provide additional methodological details to simplify calculations and to deal with potential ambiguities. Accordingly, for the purposes of calculating the BHP payment rates, the reference premium, in accordance with 26 U.S.C. 36B(b)(3)(C), is defined as the adjusted monthly premium for an applicable second lowest cost silver plan. The applicable second lowest cost silver plan is defined in 26 U.S.C. 36B(b)(3)(B) as the second lowest cost silver plan of the individual market in the rating area in which the taxpayer resides, which is offered through the same Marketplace. We propose to use the adjusted monthly premium for an applicable second lowest cost silver plan in 2017 and 2018 as the reference premium (except in the case of a state that elects to use the 2016 or 2017 premium, respectively, as the basis for the federal BHP payment, as described in section II.F of this final notice).

The reference premium would be the premium applicable to non-tobacco users. This is consistent with the provision in 26 U.S.C. 36B(b)(3)(C) that bases the PTC on premiums that are adjusted for age alone, without regard to tobacco use, even for states that allow insurers to vary premiums based on tobacco use in accordance with 42 U.S.C. 300gg(a)(1)(A)(iv).

Consistent with the policy set forth in 26 CFR 1.36B–3(f)(6) to calculate the PTC for those enrolled in a QHP through an Marketplace, we propose not to update the payment methodology, and subsequently the federal BHP payment rates, in the event that the second lowest cost silver plan used as the reference premium, or the lowest cost silver plan, changes (that is, terminates or closes enrollment during the year).

The applicable second lowest cost silver plan premium will be included in the BHP payment methodology by age range, geographic area, and self-only or applicable category of family coverage obtained through BHP.

American Indians and Alaska Natives with household incomes between 100 percent and 300 percent of the FPL are eligible for a full cost sharing subsidy regardless of the plan they select (as described in sections 1402(d) and 2901(a) of the Affordable Care Act). We assume that American Indians and Alaska Natives would be more likely to enroll in bronze plans as a result, as it would reduce the amount of the premium they would pay compared to the costs of enrolling in a silver plan; thus, for American Indian/Alaska Native BHP enrollees, we propose to use the lowest cost bronze plan as the basis for the reference premium for the purposes of calculating the CSR portion of the federal BHP payment as described further in section II.E of this proposed methodology.

We note that the choice of the second lowest cost silver plan for calculating BHP payments would rely on several simplifying assumptions in its selection. For the purposes of determining the second lowest cost silver plan for calculating PTC for a person enrolled in a QHP through an Marketplace, the applicable plan may differ for various reasons. For example, a different second lowest cost silver plan may apply to a family consisting of 2 adults, their child, and their niece than to a family with 2 adults and their children, because 1 or more QHPs in the family's geographic area might not offer family coverage that includes the niece. We believe that it would not be possible to replicate such variations for calculating the BHP payment and believe that in aggregate they would not result in a significant difference in the payment. Thus, we propose to use the second lowest cost silver plan available to any enrollee for a given age, geographic area, and coverage category.

This choice of reference premium relies on 2 assumptions about enrollment in the Marketplaces. First, we assume that all persons enrolled in BHP would have elected to enroll in a silver level plan if they had instead enrolled in a QHP through the Marketplaces. It is possible that some persons would have chosen not to enroll at all or would have chosen to enroll in a different metal-level plan (in particular, a bronze level plan with a premium that is less than the PTC for which the person was eligible). We do not believe it is appropriate to adjust the payment for an assumption that some BHP enrollees would not have enrolled in QHPs for purposes of calculating the BHP payment rates, since section 1331(d)(3)(A)(ii) of the Affordable Care Act requires the calculation of such rates as if the enrollee had enrolled in a qualified health plan through an Marketplace.

Second, we assume that, among all available silver plans, all persons enrolled in BHP would have selected the second-lowest cost plan. Both this and the prior assumption allow an administratively feasible determination of federal payment levels. They also have some implications for the CSR portion of the rate. If persons were to enroll in a bronze level plan through the Marketplace, they would not be eligible for CSRs, unless they were an eligible American Indian or Alaska Native; thus, assuming that all persons enroll in a silver level plan, rather than a plan with a different metal level, would increase the BHP payment. Assuming that all persons enroll in the second lowest cost silver plan for the purposes of calculating the CSR portion of the rate may result in a different level of CSR payments than would have been paid if the persons were enrolled in different silver level plans on the Marketplaces (with either lower or higher premiums). We believe that it would be difficult to project how many BHP enrollees would have enrolled in different silver level QHPs, and thus propose to use the second lowest cost silver plan as the basis for the reference premium and calculating the CSR portion of the rate. While some data is available from the Marketplaces, developing projections of how persons in different income ranges choose plans and extrapolating that to other states, with different numbers of plans and different premiums, would not be an improvement upon the current methodology. For American Indian/Alaska Native BHP enrollees, we propose to use the lowest cost bronze plan as the basis for the reference premium as described further in section II.E. of this proposed methodology.

The applicable age bracket will be one dimension of each rate cell. We propose to assume a uniform distribution of ages and estimate the average premium amount within each rate cell. We believe that assuming a uniform distribution of ages within these ranges is a reasonable approach and would produce a reliable determination of the PTC and CSR components.

We also believe this approach would avoid potential inaccuracies that could otherwise occur in relatively small payment cells if age distribution were measured by the number of persons eligible or enrolled.

We propose to use geographic areas based on the rating areas used in the Marketplaces. We propose to define each geographic area so that the reference premium is the same throughout the geographic area. When the reference premium varies within a rating area, we propose defining geographic areas as aggregations of counties with the same reference premium. Although plans are allowed to serve geographic areas smaller than counties after obtaining our approval, we propose that no geographic area, for

purposes of defining BHP payment rate cells, will be smaller than a county. We do not believe that this assumption will have a significant impact on federal payment levels and it would likely simplify both the calculation of BHP payment rates and the operation of BHP.

Finally, in terms of the coverage category, we propose that federal payment rates only recognize self-only and two-adult coverage, with exceptions that account for children who are potentially eligible for BHP. First, in states that set the upper income threshold for children's Medicaid and CHIP eligibility below 200 percent of FPL (based on modified adjusted gross income), children in households with incomes between that threshold and 200 percent of FPL would be potentially eligible for BHP. Currently, the only states in this category are Arizona, Idaho, and North Dakota.[4] Second, BHP would include lawfully present immigrant children with incomes at or below 200 percent of FPL in states that have not exercised the option under the sections 1903(v)(4)(A)(ii) and 2107(e)(1)(E) of the Act to qualify all otherwise eligible, lawfully present immigrant children for Medicaid and CHIP. States that fall within these exceptions would be identified based on their Medicaid and CHIP State Plans, and the rate cells would include appropriate categories of BHP family coverage for children. For example, Idaho's Medicaid and CHIP eligibility is limited to families with MAGI at or below 185 percent FPL. If Idaho implemented BHP, Idaho children with incomes between 185 and 200 percent could qualify. In other states, BHP eligibility will generally be restricted to adults, since children who are citizens or lawfully present immigrants and who live in households with incomes at or below 200 percent of FPL will qualify for Medicaid or CHIP and thus be ineligible for BHP under section 1331 (e)(1)(C) of the Affordable Care Act, which limits BHP to individuals who are ineligible for minimum essential coverage (as defined in section 5000A(f) of the Internal Revenue Code of 1986).

2. Population Health Factor (PHF)

We propose that the population health factor be included in the methodology to account for the potential differences in the average health status between BHP enrollees and persons enrolled in the Marketplace. To the extent that BHP enrollees would have been enrolled in the Marketplace in the absence of BHP in a state, the exclusion of those BHP enrollees in the Marketplace may affect the average health status of the overall population and the expected QHP premiums. Our proposal continues the methodology currently in place, except to update reference years.

We currently do not believe that there is evidence that the BHP population would have better or poorer health status than the Marketplace population. At this time, there is a lack of experience available in the Marketplace that limits the ability to analyze the health differences between these groups of enrollees. Marketplaces have been in operation since 2014, and 2 states have operated BHP in 2015, but we do not have the data available to do the analysis necessary to make this adjustment at this time. In addition, differences in population health may vary across states. Thus, at this time, we believe that it is not feasible to develop a methodology to make a prospective adjustment to the population health factor that is reliably accurate.

Given these analytic challenges and the limited data about Marketplace coverage and the characteristics of BHP-eligible consumers that will be available by the time we establish federal payment rates for 2017 and 2018, we believe that the most appropriate adjustment for 2017 and 2018 would be 1.00.

In the 2015 and 2016 payment methodologies, we included an option for states to include a retrospective population health status adjustment. Similarly, we propose for the 2017 and 2018 payment methodology to provide states with the same option, as described further in section II.G of this proposed methodology, to include a retrospective population health status adjustment in the certified methodology, which is subject to our review and approval. Regardless of whether a state elects to include a retrospective population health status adjustment, we anticipate that, in future years, when additional data become available about Marketplace coverage and the characteristics of BHP enrollees, we may estimate this factor differently.

While the statute requires consideration of risk adjustment payments and reinsurance payments insofar as they would have affected the PTC and CSRs that would have been provided to BHP-eligible individuals had they enrolled in QHPs, we are not proposing to require that a BHP program's standard health plans receive such payments. As explained in the BHP final rule, BHP standard health plans are not included in the risk adjustment program operated by HHS on behalf of states. Further, standard health plans do not qualify for payments from the transitional reinsurance program established under section 1341 of the Affordable Care Act.[5] To the extent that a state operating a BHP determines that, because of the distinctive risk profile of BHP-eligible consumers, BHP standard health plans should be included in mechanisms that share risk with other plans in the state's individual market, the state would need to use other methods for achieving this goal.

3. Income (I)

Household income is a significant determinant of the amount of the PTC and CSRs that are provided for persons enrolled in a QHP through the Marketplace. Accordingly, both the current and proposed BHP payment methodology incorporates income into the calculations of the payment rates through the use of income-based rate cells. We propose defining income in accordance with the definition of modified adjusted gross income in 26 U.S.C. 36B(d)(2)(B) and consistent with the definition in 45 CFR 155.300. Income would be measured relative to the FPL, which is updated periodically in the **Federal Register** by the Secretary under the authority of 42 U.S.C. 9902(2), based on annual changes in the consumer price index for all urban consumers (CPI–U). In our proposed methodology, household size and income as a percentage of FPL would be used as factors in developing the rate cells. We propose using the following income ranges measured as a percentage of FPL:[6]

- 0–50 percent.
- 51–100 percent.
- 101–138 percent.
- 139–150 percent.
- 151–175 percent.
- 176–200 percent.

We further propose to assume a uniform income distribution for each federal BHP payment cell. We believe that assuming a uniform income distribution for the income ranges proposed would be reasonably accurate for the purposes of calculating the PTC and CSR components of the BHP

[4] CMCS. ''State Medicaid and CHIP Income Eligibility Standards Effective January 1, 2014.''

[5] See 45 CFR 153.400(a)(2)(iv) (BHP standard health plans are not required to submit reinsurance contributions), 153.20 (definition of ''Reinsurance-eligible plan'' as not including ''health insurance coverage not required to submit reinsurance contributions''), § 153.230(a) (reinsurance payments under the national reinsurance parameters are available only for ''Reinsurance-eligible plans'').

[6] These income ranges and this analysis of income apply to the calculation of the PTC. Many fewer income ranges and a much simpler analysis apply in determining the value of CSRs, as specified below.

payment and would avoid potential errors that could result if other sources of data were used to estimate the specific income distribution of persons who are eligible for or enrolled in BHP within rate cells that may be relatively small.

Thus, when calculating the mean, or average, PTC for a rate cell, we propose to calculate the value of the PTC at each one percentage point interval of the income range for each federal BHP payment cell and then calculate the average of the PTC across all intervals. This calculation would rely on the PTC formula described in section II.4 of this proposed methodology.

As the PTC for persons enrolled in QHPs would be calculated based on their income during the open enrollment period, and that income would be measured against the FPL at that time, we propose to adjust the FPL by multiplying the FPL by a projected increase in the CPI–U between the time that the BHP payment rates are calculated and the QHP open enrollment period, if the FPL is expected to be updated during that time. We propose that the projected increase in the CPI–U would be based on the intermediate inflation forecasts from the most recent OASDI and Medicare Trustees Reports.[7]

4. Premium Tax Credit Formula (PTCF)

In Equation 1 described in section II.A.1 of this proposed methodology, we propose to use the formula described in 26 U.S.C. 36B(b) to calculate the estimated PTC that would be paid on behalf of a person enrolled in a QHP on an Marketplace as part of the BHP payment methodology. This formula is used to determine the contribution amount (the amount of premium that an individual or household theoretically would be required to pay for coverage in a QHP on an Marketplace), which is based on (A) the household income; (B) the household income as a percentage of FPL for the family size; and (C) the schedule specified in 26 U.S.C. 36B(b)(3)(A) and shown below. The difference between the contribution amount and the adjusted monthly premium for the applicable second lowest cost silver plan is the estimated amount of the PTC that would be provided for the enrollee.

The PTC amount provided for a person enrolled in a QHP through an Marketplace is calculated in accordance with the methodology described in 26 U.S.C. 36B(b)(2). The amount is equal to the lesser of the premium for the plan in which the person or household enrolls, or the adjusted premium for the applicable second lowest cost silver plan minus the contribution amount.

The applicable percentage is defined in 26 U.S.C. 36B (b)(3)(A) and 26 CFR 1.36B–3(g) as the percentage that applies to a taxpayer's household income that is within an income tier specified in Table 1, increasing on a sliding scale in a linear manner from an initial premium percentage to a final premium percentage specified in the table (see Table 1). The methodology is unchanged, but we propose to update the percentages:

**TABLE 1: Applicable Percentage Table for (CY) 2016**[8]

| In the case of household income (expressed as a percent of poverty line) within the following income tier: | The initial premium percentage is– | The final premium percentage is– |
|---|---|---|
| Up to 133% | 2.03% | 2.03% |
| 133% but less than 150% | 3.05% | 4.07% |
| 150% but less than 200% | 4.07% | 6.41% |
| 200% but less than 250% | 6.41% | 8.18% |
| 250% but less than 300% | 8.18% | 9.66% |
| 300% but not more than 400% | 9.66% | 9.66% |

These are the applicable percentages for calendar year (CY) 2016 and would be used for the 2017 payment methodology. We plan to use the CY 2017 percentages when they become available for the 2018 payment methodology, as the percentages are indexed annually and published by the Internal Revenue Service (IRS). The applicable percentages will be updated in future years in accordance with 26 U.S.C. 36B(b)(3)(A)(ii).

5. Income Reconciliation Factor (IRF)

For persons enrolled in a QHP through an Marketplace who receive an advance payment of the premium tax credit (APTC), there will be an annual reconciliation following the end of the year to compare the advance payments to the correct amount of PTC based on household circumstances shown on the federal income tax return. Any difference between the latter amounts and the advance payments made during the year would either be paid to the taxpayer (if too little APTC was paid) or charged to the taxpayer as additional tax (if too much APTC was made, subject to any limitations in statute or regulation), as provided in 26 U.S.C. 36B(f).

Section 1331(e)(2) of the Affordable Care Act specifies that an individual eligible for BHP may not be treated as a qualified individual under section 1312 eligible for enrollment in a QHP offered through an Marketplace. We are defining ''eligible'' to mean anyone for whom the state agency or the Marketplace assesses or determines, based on the single streamlined application or renewal form, as eligible for enrollment in the BHP. Because

[7] See Table IV A1 from the 2013 reports in *http://www.cms.gov/Research-Statistics-Data-and-Systems/Statistics-Trends-and-Reports/ReportsTrustFunds/Downloads/TR2014.pdf.*

[8] Examination of returns and claims for refund, credit, or abatement; determination of correct tax liability. *http://www.irs.gov/pub/irs-drop/rp-14-62.pdf.*

enrollment in a QHP is a requirement for PTC for the enrolled individual's coverage, individuals determined or assessed as eligible for a BHP are not eligible to receive APTC assistance for coverage in the Marketplace. Because they do not receive APTC assistance, BHP enrollees, on whom the 2017 and 2018 payment methodology is based, are not subject to the same income reconciliation as Marketplace consumers. Nonetheless, there may still be differences between a BHP enrollee's household income reported at the beginning of the year and the actual income over the year. These may include small changes (reflecting changes in hourly wage rates, hours worked per week, and other fluctuations in income during the year) and large changes (reflecting significant changes in employment status, hourly wage rates, or substantial fluctuations in income). There may also be changes in household composition. Thus, we believe that using unadjusted income as reported prior to the BHP program year may result in calculations of estimated PTC that are inconsistent with the actual incomes of BHP enrollees during the year. Even if the BHP program adjusts household income determinations and corresponding claims of federal payment amounts based on household reports during the year or data from third-party sources, such adjustments may not fully capture the effects of tax reconciliation that BHP enrollees would have experienced had they been enrolled in a QHP through an Marketplace and received APTC assistance.

Therefore, in accordance with current practice, we propose including in Equation 1 an income adjustment factor that would account for the difference between calculating estimated PTC using: (a) Income relative to FPL as determined at initial application and potentially revised mid-year, under proposed § 600.320, for purposes of determining BHP eligibility and claiming federal BHP payments; and (b) actual income relative to FPL received during the plan year, as it would be reflected on individual federal income tax returns. This adjustment would seek prospectively to capture the average effect of income reconciliation aggregated across the BHP population had those BHP enrollees been subject to tax reconciliation after receiving APTC assistance for coverage provided through QHPs. Consistent with the methodology used in 2015 (and that will be used in 2016), for 2017 and 2018, we propose estimating reconciliation effects based on tax data for 2 years, reflecting income and tax unit composition changes over time among BHP-eligible individuals.

The Office of Tax Analysis in the U.S. Department of Treasury (OTA) maintains a model that combines detailed tax and other data, including Marketplace enrollment and PTC claimed, to project Marketplace premiums, enrollment, and tax credits. For each enrollee, this model compares the APTC based on household income and family size estimated at the point of enrollment with the PTC based on household income and family size reported at the end of the tax year. The former reflects the determination using enrollee information furnished by the applicant and tax data furnished by the IRS. The latter would reflect the PTC eligibility based on information on the tax return, which would have been determined if the individual had not enrolled in BHP. We propose that the ratio of the reconciled PTC to the initial estimation of PTC would be used as the income reconciliation factor in Equation (1) for estimating the PTC portion of the BHP payment rate.

For 2016, OTA estimated that the income reconciliation factor for states that have implemented the Medicaid eligibility expansion to cover adults up to 133 percent of the FPL will be 100.25 percent, and for states that have not implemented the Medicaid eligibility expansion and do not cover adults up to 133 percent of the FPL will be 100.24 percent. In the 2016 payment methodology, the IRF was set equal to 100.25 percent. We propose updating this calculation and the IRF for 2017 and 2018.

6. Tobacco Rating Adjustment Factor (TRAF)

As described previously, the reference premium is estimated, for purposes of determining both the PTC and related federal BHP payments, based on premiums charged for non-tobacco users, including in states that allow premium variations based on tobacco use, as provided in 42 U.S.C. 300gg (a)(1)(A)(iv). In contrast, as described in 45 CFR 156.430, the CSR advance payments are based on the total premium for a policy, including any adjustment for tobacco use. Accordingly, we propose to continue our current methodology and to incorporate a tobacco rating adjustment factor into Equation 2 that reflects the average percentage increase in health care costs that results from tobacco use among the BHP-eligible population and that would not be reflected in the premium charged to non-users. This factor will also take into account the estimated proportion of tobacco users among BHP-eligible consumers.

To estimate the average effect of tobacco use on health care costs (not reflected in the premium charged to non-users), we propose to calculate the ratio between premiums that silver level QHPs charge for tobacco users to the premiums they charge for non-tobacco users at selected ages. To calculate estimated proportions of tobacco users, we propose to use data from the Centers for Disease Control and Prevention to estimate tobacco utilization rates by state and relevant population characteristic.[9] For each state, we propose to calculate the tobacco usage rate based on the percentage of persons by age who use cigarettes and the percentage of persons by age that use smokeless tobacco, and calculate the utilization rate by adding the two rates together. The data is available for 3 age intervals: 18–24; 25–44; and 45–64. For the BHP payment rate cell for persons ages 21–34, we would calculate the factor as (4/14 * the utilization rate of 18–24 year olds) plus (10/14 * the utilization rate of 25–44 year olds), which would be the weighted average of tobacco usage for persons 21–34 assuming a uniform distribution of ages; for all other age ranges used for the rate cells, we would use the age range in the CDC data in which the BHP payment rate cell age range is contained.

We propose to provide tobacco rating factors that may vary by age and by geographic area within each state. To the extent that the second lowest cost silver plans have a different ratio of tobacco user rates to non-tobacco user rates in different geographic areas, the tobacco rating adjustment factor may differ across geographic areas within a state. In addition, to the extent that the second lowest cost silver plan has a different ratio of tobacco user rates to non-tobacco user rates by age, or that there is a different prevalence of tobacco use by age, the tobacco rating adjustment factor may differ by age.

7. Factor for Removing Administrative Costs (FRAC)

The Factor for Removing Administrative Costs represents the average proportion of the total premium that covers allowed health benefits, and we propose to continue including this factor in our calculation of estimated CSRs in Equation 2. The product of the reference premium and the Factor for Removing Administrative Costs would

[9] Centers for Disease Control and Prevention, *Tobacco Control State Highlights 2012: http://www.cdc.gov/tobacco/data_statistics/state_data/state_highlights/2012/index.htm.*

approximate the estimated amount of Essential Health Benefit (EHB) claims that would be expected to be paid by the plan. This step is needed because the premium also covers such costs as taxes, fees, and QHP administrative expenses. We are proposing to set this factor equal to 0.80, which is the same percentage for the factor to remove administrative costs for calculating CSR advance payments for established in the 2016 HHS Notice of Benefit and Payment Parameters.

8. Actuarial Value (AV)

The actuarial value is defined as the percentage paid by a health plan of the total allowed costs of benefits, as defined under 45 CFR 156.20. (For example, if the average health care costs for enrollees in a health insurance plan were $1,000 and that plan has an actuarial value of 70 percent, the plan would be expected to pay on average $700 ($1,000 × 0.70) for health care costs per enrollee.) By dividing such estimated costs by the actuarial value in the proposed methodology, we would calculate the estimated amount of total EHB-allowed claims, including both the portion of such claims paid by the plan and the portion paid by the consumer for in-network care. (To continue with that same example, we would divide the plan's expected $700 payment of the person's EHB-allowed claims by the plan's 70 percent actuarial value to ascertain that the total amount of EHB-allowed claims, including amounts paid by the consumer, is $1,000.)

For the purposes of calculating the CSR rate in Equation 2, we propose to continue to use the standard actuarial value of the silver level plans in the individual market, which is equal to 70 percent.

9. Induced Utilization Factor (IUF)

The induced utilization factor is proposed to continue to be a factor in calculating estimated CSRs in Equation 2 to account for the increase in health care service utilization associated with a reduction in the level of cost sharing a QHP enrollee would have to pay, based on the cost-sharing reduction subsidies provided to enrollees.

The 2016 HHS Notice of Benefit and Payment Parameters provided induced utilization factors for the purposes of calculating cost-sharing reduction advance payments for 2016. In that Notice, the induced utilization factors for silver plan variations ranged from 1.00 to 1.12, depending on income. Using those utilization factors, the induced utilization factor for all persons who would qualify for BHP based on their household income as a percentage of FPL is 1.12; this would include persons with household income between 100 percent and 200 percent of FPL, lawfully present non-citizens below 100 percent of FPL who are ineligible for Medicaid because of immigration status, and American Indians and Alaska Natives with household income between 100 and 300 percent of FPL, not subject to any cost-sharing. Thus, consistent with last year, we propose to set the induced utilization factor equal to 1.12 for the BHP payment methodology.

We note that for CSRs for QHPs, there will be a final reconciliation at the end of the year and the actual level of induced utilization could differ from the factor proposed in the rule. Our proposed methodology for BHP funding would not include any reconciliation for utilization and thus may understate or overstate the impact of the effect of the subsidies on health care utilization.

10. Change in Actuarial Value (ΔAV)

The increase in actuarial value would account for the impact of the cost-sharing reduction subsidies on the relative amount of EHB claims that would be covered for or paid by eligible persons, and we propose including it as a factor in calculating estimated CSRs in Equation 2.

The actuarial values of QHPs for persons eligible for cost-sharing reduction subsidies are defined in 45 CFR 156.420(a), and eligibility for such subsidies is defined in 45 CFR 155.305(g)(2)(i) through (iii). For QHP enrollees with household incomes between 100 percent and 150 percent of FPL, and those below 100 percent of FPL who are ineligible for Medicaid because of their immigration status, CSRs increase the actuarial value of a QHP silver plan from 70 percent to 94 percent. For QHP enrollees with household incomes between 150 percent and 200 percent of FPL, CSRs increase the actuarial value of a QHP silver plan from 70 percent to 87 percent.

We propose to continue to apply this factor by subtracting the standard AV from the higher AV allowed by the applicable cost-sharing reduction. For BHP enrollees with household incomes at or below 150 percent of FPL, this factor would be 0.24 (94 percent minus 70 percent); for BHP enrollees with household incomes more than 150 percent but not more than 200 percent of FPL, this factor would be 0.17 (87 percent minus 70 percent).

*E. Adjustments for American Indians and Alaska Natives*

There are several exceptions made for American Indians and Alaska Natives enrolled in QHPs through an Marketplace to calculate the PTC and CSRs. Thus, we propose adjustments to the payment methodology described above to be consistent with the Marketplace rules.

We propose the following adjustments, unchanged from the current methodology: 1. We propose that the adjusted reference premium for use in the CSR portion of the rate would use the lowest cost bronze plan instead of the second lowest cost silver plan, with the same adjustment for the population health factor (and in the case of a state that elects to use the 2016 or 2017 premiums as the basis of the federal BHP payment, the same adjustment for the premium trend factor). American Indians and Alaska Natives are eligible for CSRs with any metal level plan, and thus we believe that eligible persons would be more likely to select a bronze level plan instead of a silver level plan. (It is important to note that this would not change the PTC, as that is the maximum possible PTC payment, which is always based on the applicable second lowest cost silver plan.)

2. We propose that the actuarial value for use in the CSR portion of the rate would be 0.60 instead of 0.70, which is consistent with the actuarial value of a bronze level plan.

3. We propose that the induced utilization factor for use in the CSR portion of the rate would be 1.15 for 2017/2018, which is consistent with the 2016 HHS Notice of Benefit and Payment Parameters induced utilization factor for calculating advance CSR payments for persons enrolled in bronze level plans and eligible for CSRs up to 100 percent of actuarial value.

4. We propose that the change in the actuarial value for use in the CSR portion of the rate would be 0.40. This reflects the increase from 60 percent actuarial value of the bronze plan to 100 percent actuarial value, as American Indians and Alaska Natives with household incomes between 100 and 300 percent FPL are eligible to receive CSRs up to 100 percent of actuarial value.

*F. State Option To Use 2016 or 2017 QHP Premiums for BHP Payments*

In the interest of allowing states greater certainty in the total BHP federal payments for 2017 or 2018, we propose providing states the option to have their final 2017 and 2018 federal BHP

payment rates, respectively, calculated using the projected 2017 and 2018 adjusted reference premium (that is, using 2016 or 2017 premium data multiplied by the premium trend factor defined below), as described in Equation (3b).

For a state that would elect to use the 2016 or 2017 premiums as the basis for the 2017 and 2018 BHP federal payments, respectively, we propose requiring that the state inform us no later than May 15, 2016 for the 2017 program year and May 15, 2017 for the 2018 program year. Our experience to date has been that states have elected to use the premium data that correlates to the year of payment. If this trend continues, we will consider in future payment notices whether to eliminate the choice of the premium from the prior year moving forward.

For Equation (3b), we propose to continue to define the premium trend factor, with minor changes in calculation sources and methods, as follows:

Premium Trend Factor (PTF): In Equation (3b), we propose to calculate an adjusted reference premium (ARP) based on the application of certain relevant variables to the reference premium (RP), including a premium trend factor (PTF). In the case of a state that would elect to use the 2016 or 2017 premiums as the basis for determining the BHP payment, it would be appropriate to apply a factor that would account for the change in health care costs between the year of the premium data and the BHP plan year. We are proposing to define this as the premium trend factor in the BHP payment methodology. This factor would approximate the change in health care costs per enrollee, which would include, but not be limited to, changes in the price of health care services and changes in the utilization of health care services. This would provide an estimate of the adjusted monthly premium for the applicable second lowest cost silver plan that would be more accurate and reflective of health care costs in the BHP program year, which would be the year following issuance of the final federal payment notice. In addition, we believe that it would be appropriate to adjust the trend factor for the estimated impact of changes to the transitional reinsurance program on the average QHP premium.

For the trend factor we propose to use the annual growth rate in private health insurance expenditures per enrollee from the National Health Expenditure projections, developed by the Office of the Actuary in CMS (*https://www.cms.gov/Research-Statistics-Data-and-Systems/Statistics-Trends-and-Reports/NationalHealthExpendData/Downloads/proj2014.pdf*).

We propose to also include an adjustment for changes in the transitional reinsurance program. We propose that this adjustment would be developed from analysis by CMS' Center for Consumer Information and Insurance Oversight (CCIIO).

States may want to consider that the increase in premiums for QHPs from 2016 to 2017 or from 2017 to 2018 may differ from the premium trend factor developed for the BHP funding methodology for several reasons. In particular, states may want to consider that the second lowest cost silver plan for 2016 or 2017 may not be the same as the second lowest cost silver plan in 2017 or 2018, respectively. This may lead to the premium trend factor being greater than or less than the actual change in the premium of the second lowest cost silver plan in 2016 compared to the premium of the second lowest cost silver plan in 2017 (or from 2017 to 2018).

### *G. State Option To Include Retrospective State-Specific Health Risk Adjustment in Certified Methodology*

To determine whether the potential difference in health status between BHP enrollees and consumers in the Marketplace would affect the PTC, CSRs, risk adjustment and reinsurance payments that would have otherwise been made had BHP enrollees been enrolled in coverage on the Marketplace, we propose to continue to provide states implementing the BHP the option to propose and to implement, as part of the certified methodology, a retrospective adjustment to the federal BHP payments to reflect the actual value that would be assigned to the population health factor (or risk adjustment) based on data accumulated during program years 2017 and 2018 for each rate cell.

We acknowledge that there is uncertainty with respect to this factor due to the lack of experience of QHPs on the Marketplace and other payments related to the Marketplace, which is why, absent a state election, we propose to use a value for the population health factor to determine a prospective payment rate which assumes no difference in the health status of BHP enrollees and QHP enrollees. There is considerable uncertainty regarding whether the BHP enrollees will pose a greater risk or a lesser risk compared to the QHP enrollees, how to best measure such risk, and the potential effect such risk would have had on PTC, CSRs, risk adjustment and reinsurance payments that would have otherwise been made had BHP enrollees been enrolled in coverage on the Marketplace. To the extent, however, that a state would develop an approved protocol to collect data and effectively measure the relative risk and the effect on federal payments, we propose to permit a retrospective adjustment that would measure the actual difference in risk between the two populations to be incorporated into the certified BHP payment methodology and used to adjust payments in the previous year.

For a state electing the option to implement a retrospective population health status adjustment, we propose requiring the state to submit a proposed protocol to CMS, which would be subject to approval by us and would be required to be certified by the Chief Actuary of CMS, in consultation with the Office of Tax Analysis, as part of the BHP payment methodology. We describe the protocol for the population health status adjustment in guidance in *Considerations for Health Risk Adjustment in the Basic Health Program in Program Year 2015* (*http://www.medicaid.gov/Basic-Health-Program/Downloads/Risk-Adjustment-and-BHP-White-Paper.pdf*). We propose requiring a state to submit its proposed protocol by August 1, 2016 for our approval for the 2017 program year, and by August 1, 2017 for the 2018 program year. This submission would also include descriptions of how the state would collect the necessary data to determine the adjustment, including any contracting contingences that may be in place with participating standard health plan issuers. We would provide technical assistance to states as they develop their protocols. To implement the population health status, we propose that we must approve the state's protocol no later than December 31, 2016 for the 2017 program year, and by December 31, 2017 for the 2018 program year. Finally, we propose that the state be required to complete the population health status adjustment at the end of 2017 (or 2018) based on the approved protocol. After the end of the 2017 and 2018 program years, and once data is made available, we proposed to review the state's findings, consistent with the approved protocol, and make any necessary adjustments to the state's federal BHP payment amounts. If we determine that the federal BHP payments were less than they would have been using the final adjustment factor, we would apply the difference to the state's next quarterly BHP trust fund deposit. If we determine that the federal BHP payments were more than they

would have been using the final reconciled factor, we would subtract the difference from the next quarterly BHP payment to the state.

*H. Example Application of the BHP Funding Methodology*

In the 2015 proposed payment methodology, we included an example of how the BHP funding methodology would be applied (Proposed Basic Health Program 2015 Funding Methodology, (78 FR 77399), published in the **Federal Register** on December 23, 2013). For those interested in this example, we would refer to the 2015 proposed payment methodology and note the following changes since that time.

In the final BHP payment methodology, we provided the option for states to elect to use the 2015 premiums to calculate the BHP payment rates instead of the 2014 premiums multiplied by the premium trend factor. The example in the previous proposed payment methodology used the 2014 premiums multiplied by the premium trend factor only.

In addition, we provided the option for the state to develop a risk adjustment protocol to revise the population health factor in the final payment methodology. The example in the previous proposed payment methodology did not assume any adjustment to the population health factor.

Furthermore, we modified the age ranges used to develop the rate cells after the proposed payment methodology was published. The age range for persons ages 21–44 was divided into age ranges of 21–34 and 35–44.

## III. Collection of Information Requirements

This 2017 and 2018 proposed methodology is mostly unchanged from the 2016 final methodology published on February 24, 2015 (80 FR 9636). For states that have BHP enrollees who do not file federal tax returns (''non-filers''), this methodology notice clarifies that the state must develop a methodology to determine the enrollee's household income and household size consistent with Marketplace requirements. Since the requirement applies to fewer than 10 states, the 2017 and 2018 methodology does not require additional OMB review under the authority of the Paperwork Reduction Act of 1995 (44 U.S.C. 3501 *et seq.*). Otherwise, the methodology's information collection requirements and burden estimates are not affected by this action and are approved by OMB under control number 0938–1218 (CMS–10510). With regard to state elections, protocols, certifications, and status adjustments, this action would not revise or impose any additional reporting, recordkeeping, or third-party disclosure requirements or burden on qualified health plans or on states operating State Based Marketplaces.

## IV. Response to Comments

Because of the large number of public comments we normally receive on **Federal Register** documents, we are not able to acknowledge or respond to them individually. We will consider all comments we receive by the date and time specified in the **DATES** section of this preamble, and, when we proceed with a subsequent document, we will respond to the comments in the preamble to that document.

## V. Regulatory Impact Statement

*A. Overall Impact*

We have examined the impacts of this proposed methodology as required by Executive Order 12866 on Regulatory Planning and Review (September 30, 1993), Executive Order 13563 on Improving Regulation and Regulatory Review (January 18, 2011), the Regulatory Flexibility Act (RFA) (September 19, 1980, Pub. L. 96–354), section 1102(b) of the Act, section 202 of the Unfunded Mandates Reform Act of 1995 (Pub. L. 104–4, March 22, 1995) (UMRA), Executive Order 13132 on Federalism (August 4, 1999) and the Congressional Review Act (5 U.S.C. 804(2)).

Executive Orders 12866 and 13563 direct agencies to assess all costs and benefits of available regulatory alternatives and, if regulation is necessary, to select regulatory approaches that maximize net benefits (including potential economic, environmental, public health and safety effects, distributive impacts, and equity). Section 3(f) of Executive Order 12866 defines a ''significant regulatory action'' as an action that is likely to result in a rule: (1) Having an annual effect on the economy of $100 million or more in any 1 year, or adversely and materially affecting a sector of the economy, productivity, competition, jobs, the environment, public health or safety, or state, local or tribal governments or communities (also referred to as ''economically significant''); (2) creating a serious inconsistency or otherwise interfering with an action taken or planned by another agency; (3) materially altering the budgetary impacts of entitlement grants, user fees, or loan programs or the rights and obligations of recipients thereof; or (4) raising novel legal or policy issues arising out of legal mandates, the President's priorities, or the principles set forth in the Executive Order.

A regulatory impact analysis (RIA) must be prepared for major rules with economically significant effects ($100 million or more in any 1 year). As noted in the BHP final rule, BHP provides states the flexibility to establish an alternative coverage program for low-income individuals who would otherwise be eligible to purchase coverage through the Marketplace. Because we propose no changes in methodology that would have a consequential effect on state participation incentives, or on the size of either the BHP program or offsetting PTC and CSR expenditures, the effects of the changes made in this methodology notice would not approach the $100 million threshold, and hence it is neither an economically significant rule under E.O. 12866 nor a major rule under the Congressional Review Act. The size of the BHP program depends on several factors, including the number of and which particular states choose to implement or continue BHP in 2017 or 2018, the level of QHP premiums in 2016 and 2017, the number of enrollees in BHP, and the other coverage options for persons who would be eligible for BHP. In particular, while we generally expect that many enrollees would have otherwise been enrolled in a QHP through the Marketplace, some persons may have been eligible for Medicaid under a waiver or a state health coverage program. For those who would have enrolled in a QHP and thus would have received PTCs or CSRs, the federal expenditures for BHP would be expected to be more than offset by a reduction in federal expenditures for PTCs and CSRs. For those who would have been enrolled in Medicaid, there would likely be a smaller offset in federal expenditures (to account for the federal share of Medicaid expenditures), and for those who would have been covered in non-federal programs or would have been uninsured, there likely would be an increase in federal expenditures. None of these factors or incentives would be materially affected by the updates we propose.

In accordance with the provisions of Executive Order 12866, this notice was reviewed by the Office of Management and Budget.

1. Need for the Proposed Methodology Notice

Section 1331 of the Affordable Care Act (codified at 42 U.S.C. 18051)

requires the Secretary to establish a BHP, and section (d)(1) specifically provides that if the Secretary finds that a state meets the requirements of the program established under section (a) [of section 1331 of the Affordable Care Act], the Secretary shall transfer to the State federal BHP payments described in section (d)(3). This proposed methodology provides for the funding methodology to determine the federal BHP payment amounts required to implement these provisions in program years 2017 and 2018.

2. Alternative Approaches

Many of the factors proposed in this notice are specified in statute; therefore, we are limited in the alternative approaches we could consider. One area in which we had a choice was in selecting the data sources used to determine the factors included in the proposed methodology. Except for state-specific reference premiums and enrollment data, we propose using national rather than state-specific data. This is due to the lack of currently available state-specific data needed to develop the majority of the factors included in the proposed methodology. We believe the national data will produce sufficiently accurate determinations of payment rates. In addition, we believe that this approach will be less burdensome on states. In many cases, using state-specific data would necessitate additional requirements on the states to collect, validate, and report data to CMS. By using national data, we are able to collect data from other sources and limit the burden placed on the states. To reference premiums and enrollment data, we propose using state-specific data rather than national data as we believe state-specific data will produce more accurate determinations than national averages.

In addition, we considered whether or not to provide states the option to develop a protocol for a retrospective adjustment to the population health factor in 2017 and 2018 as we did in the 2015 and 2016 payment methodologies. We believe that providing this option again in 2017 and 2018 is appropriate and likely to improve the accuracy of the final payments.

We also considered whether or not to require the use of 2017 and 2018 QHP premiums to develop the 2017 and 2018 federal BHP payment rates. We believe that the payment rates can still be developed accurately using either the 2016 and 2017 QHP premiums (for the 2017 and 2018 program years, respectively) or the 2017 and 2018 program year premiums and that it is appropriate to provide the states the option, given the interests and specific considerations each state may have in operating the BHP.

3. Transfers

The provisions of this notice are designed to determine the amount of funds that will be transferred to states offering coverage through a BHP rather than to individuals eligible for premium and cost-sharing reductions for coverage purchased on the Marketplace. We are uncertain what the total federal BHP payment amounts to states will be as these amounts will vary from state to state due to the varying nature of state composition. For example, total federal BHP payment amounts may be greater in more populous states simply by virtue of the fact that they have a larger BHP-eligible population and total payment amounts are based on actual enrollment. Alternatively, total federal BHP payment amounts may be lower in states with a younger BHP-eligible population as the reference premium used to calculate the federal BHP payment will be lower relative to older BHP enrollees. While state composition will cause total federal BHP payment amounts to vary from state to state, we believe that the proposed methodology, like the current methodology, accounts for these variations to ensure accurate BHP payment transfers are made to each state.

*B. Unfunded Mandates Reform Act*

Section 202 of the UMRA requires that agencies assess anticipated costs and benefits before issuing any rule whose mandates require spending in any 1 year of $100 million in 1995 dollars, updated annually for inflation, by state, local, or tribal governments, in the aggregate, or by the private sector. In 2015, that threshold is approximately $144 million. States have the option, but are not required, to establish a BHP. Further, the proposed methodology would establish federal payment rates without requiring states to provide the Secretary with any data not already required by other provisions of the Affordable Care Act or its implementing regulations. Thus, neither the current nor the proposed payment methodologies mandate expenditures by state governments, local governments, or tribal governments.

*C. Regulatory Flexibility Act*

The Regulatory Flexibility Act (5 U.S.C. 601 *et seq.*) (RFA) requires agencies to prepare an initial regulatory flexibility analysis to describe the impact of the proposed rule on small entities, unless the head of the agency can certify that the rule will not have a significant economic impact on a substantial number of small entities. The Act generally defines a ''small entity'' as (1) a proprietary firm meeting the size standards of the Small Business Administration (SBA); (2) a not-for-profit organization that is not dominant in its field; or (3) a small government jurisdiction with a population of less than 50,000. Individuals and states are not included in the definition of a small entity. Few of the entities that meet the definition of a small entity as that term is used in the RFA would be impacted directly by this proposed methodology.

Because this proposed methodology is focused solely on federal BHP payment rates to states, it does not contain provisions that would have a direct impact on hospitals, physicians, and other health care providers that are designated as small entities under the RFA. Accordingly, we have determined that the proposed methodology, like the current methodology and the final rule that established the BHP program, will not have a significant economic impact on a substantial number of small entities.

Section 1102(b) of the Act requires us to prepare a regulatory impact analysis if a proposed methodology may have a significant economic impact on the operations of a substantial number of small rural hospitals. For purposes of section 1102(b) of the Act, we define a small rural hospital as a hospital that is located outside of a metropolitan statistical area and has fewer than 100 beds. For the preceding reasons, we have determined that the proposed methodology will not have a significant impact on a substantial number of small rural hospitals.

*D. Federalism*

Executive Order 13132 establishes certain requirements that an agency must meet when it promulgates a proposed rule (and subsequent final rule) that imposes substantial direct effects on states, preempts state law, or otherwise has federalism implications. The BHP is entirely optional for states, and if implemented in a state, provides access to a pool of funding that would not otherwise be available to the state. Accordingly, the requirements of the Executive Order do not apply to this proposed methodology notice.

Dated: August 27, 2015.

**Andrew M. Slavitt,**

*Acting Administrator, Centers for Medicare & Medicaid Services.*

Dated: October 9, 2015.

**Sylvia Burwell,**

*Secretary, Department of Health and Human Services.*

[FR Doc. 2015–26907 Filed 10–21–15; 8:45 am]

**BILLING CODE 4120–01–P**

## DEPARTMENT OF COMMERCE

## National Oceanic and Atmospheric Administration

## 50 CFR Part 680

**[Docket No. 150313268–5268–01]**

**RIN 0648–BE98**

## Fisheries of the Exclusive Economic Zone Off Alaska; Bering Sea and Aleutian Islands Crab Rationalization Program

**AGENCY:** National Marine Fisheries Service (NMFS), National Oceanic and Atmospheric Administration (NOAA), Commerce.

**ACTION:** Proposed rule; request for comments.

**SUMMARY:** NMFS issues a proposed rule to implement Amendment 44 to the Fishery Management Plan for Bering Sea/Aleutian Islands King and Tanner Crabs (FMP) and a regulatory amendment that would modify regulations governing the Crab Rationalization (CR) Program. The proposed rule would modify regulations to reflect that a Right of First Refusal (ROFR) may continue with the current ROFR holder or a new ROFR holder when processor quota share (PQS) is transferred and would require PQS holders to make specific certifications regarding ROFR contracts when annually applying for individual processor quota (IPQ) and when transferring PQS that are subject to a ROFR. In addition, this proposed rule would amend CR Program regulations to separate the annual individual fishing quota (IFQ)/IPQ application into two separate applications, and would require that crab harvesting cooperatives list the name of each member of the cooperative in its application for IFQ rather than provide NMFS with copies of each member's IFQ application. These actions are necessary to improve available information concerning transfer and use of PQS and IPQ subject to a ROFR, thereby enhancing the ability of eligible crab communities to retain their historical processing interests in the Bering Sea and Aleutian Islands (BSAI) crab fisheries, and to improve the administration of the CR Program. These actions are intended to promote the goals and objectives of the Magnuson-Stevens Fishery Conservation and Management Act, the FMP, and other applicable laws.

**DATES:** Submit comments on or before November 23, 2015.

**ADDRESSES:** You may submit comments, identified by NOAA–NMFS–2013–0057, by any one of the following methods.

- *Electronic Submission:* Submit all electronic public comments via the Federal e-Rulemaking Portal. Go to *www.regulations.gov/#!docketDetail;D=NOAA-NMFS-2013-0057,* click the ''Comment Now!'' icon, complete the required fields, and enter or attach your comments.
- *Mail:* Submit written comments to Glenn Merrill, Assistant Regional Administrator, Sustainable Fisheries Division, Alaska Region NMFS, Attn: Ellen Sebastian. Mail comments to P.O. Box 21668, Juneau, AK 99802–1668.

*Instructions:* Comments sent by any other method, to any other address or individual, or received after the end of the comment period, may not be considered by NMFS. All comments received are a part of the public record and will generally be posted for public viewing on *www.regulations.gov* without change. All personal identifying information (*e.g.,* name, address), confidential business information, or otherwise sensitive information submitted voluntarily by the sender will be publicly accessible. NMFS will accept anonymous comments (enter ''N/A'' in the required fields if you wish to remain anonymous).

Written comments regarding the burden-hour estimates or other aspects of the collection-of-information requirements contained in this rule may be submitted to NMFS at the above address; emailed to *OIRA_Submission@omb.eop.gov* or faxed to 202–395–7285.

Electronic copies of Amendment 44 to the FMP, the Regulatory Impact Review (RIR), the Initial Regulatory Flexibility Analysis (IRFA), and the Categorical Exclusion prepared for this action may be obtained from *http://www.regulations.gov* or from the Alaska Region Web site at *http://alaskafisheries.noaa.gov.* The Environmental Impact Statement (EIS), RIR, and Social Impact Assessment prepared for the CR Program are available from the NMFS Alaska Region Web site at *http://alaskafisheries.noaa.gov.*

**FOR FURTHER INFORMATION CONTACT:** Rachel Baker, 907–586–7228.

**SUPPLEMENTARY INFORMATION:** NMFS manages the king and Tanner crab fisheries in the exclusive economic zone of the Bering Sea and Aleutian Islands (BSAI) under the FMP. The North Pacific Fishery Management Council (Council) prepared the FMP under the Magnuson-Stevens Fishery Conservation and Management Act (Magnuson-Stevens Act), 16 U.S. C. 1801 *et seq.* Regulations governing U.S. fisheries and implementing the FMP appear at 50 CFR part 680.

NMFS published the final rule to implement the Crab Rationalization (CR) Program on March 2, 2005 (70 FR 10174). Fishing under the CR Program started with the 2005/2006 crab fishing year.

The Council submitted Amendment 44 for review by the Secretary of Commerce. A notice of availability of Amendment 44 was published in the **Federal Register** on October 9, 2015 (80 FR 61150), with comments invited through December 8, 2015. All relevant written comments received by that time, whether specifically directed to Amendment 44, or to the proposed rule, will be considered in the approval/disapproval decision on Amendment 44.

The CR Program is a catch share program for nine BSAI crab fisheries that allocates those resources among harvesters, processors, and coastal communities. Under the CR Program, NMFS issued quota share (QS) to eligible harvesters based on their historical participation during a set of qualifying years in one or more of the nine CR Program fisheries. QS is an exclusive, revocable privilege allowing the holder to harvest a specific percentage of the annual total allowable catch (TAC) in a CR Program fishery.

A QS holder's annual allocation, called individual fishing quota (IFQ), is expressed in pounds and is based on the amount of QS held in relation to the total QS pool for that fishery. NMFS issues IFQ in three classes: Class A IFQ, Class B IFQ, and Class C IFQ. Three percent of IFQ is issued as Class C IFQ for captains and crew. Of the remaining IFQ, 90 percent is issued as Class A IFQ and 10 percent is issued as Class B IFQ.

NMFS issued processor quota share (PQS) to qualified individuals and entities based on processing activities in CR Program fisheries during a period of qualifying years. PQS is an exclusive, revocable privilege to receive deliveries of a fixed percentage of the annual TAC from a CR Program fishery. A PQS holder's annual allocation is known as individual processing quota (IPQ). NMFS issues IPQ at a one-to-one correlation with the amount of Class A

IFQ issued for each CR Program fishery. Class A IFQ must be delivered to a processor holding a matching amount of IPQ; Class C IFQ and Class B IFQ may be delivered to any registered crab receiver.

**Right of First Refusal**

The CR Program includes several provisions intended to protect specific communities that had historically been active in the processing of king and Tanner crab from adverse impacts that could result from the CR Program. The CR Program established eligibility criteria and regulations at 50 CFR 680.2 identified the nine communities that satisfy the eligibility criteria: Adak, Akutan, Dutch Harbor, Kodiak, King Cove, False Pass, St. George, St. Paul, and Port Moller. These communities are referred to as ''eligible crab communities'' for purposes of the CR Program's community protection measures. Additional detail on the rationale and criteria used to establish the eligible crab communities can be found in the final rule implementing the CR Program (March 2, 2005, 70 FR 10174). Additional information on the eligible crab communities is provided in Section 3.1.4 of the RIR/IRFA prepared for this action.

With the exception of Adak, the CR Program provides eligible crab communities, or ECCs, with a right of first refusal (ROFR) on certain PQS and IPQ transfers. A ROFR provides an eligible crab community with the right to intervene in the sale (*i.e.,* transfer) of PQS, IPQ, and ''other goods'' (*i.e.,* assets) associated with that community under specific conditions. The regulations at § 680.41(l) require an eligible crab community to identify an entity to represent it for purposes of ROFR. The eight eligible crab communities that have a ROFR, and their representative entities are listed in Table 9 of the RIR/IRFA. The eligible crab community of Adak is not provided a ROFR for PQS or IPQ associated with that community because the CR Program incorporates other provisions to protect Adak. These provisions are described in the final rule implementing the CR Program (March 2, 2005, 70 FR 10174).

Of the eight eligible crab communities, four are community development quota (CDQ) communities, and four are non-CDQ communities. In the case of eligible crab communities that are also CDQ communities, the local CDQ group is the entity that can exercise the ROFR on behalf of the community (see § 680.41(l)(2)(i)). For the other four non-CDQ eligible crab communities, regulations authorize the governing bodies of these eligible crab communities to identify the entity that can exercise the ROFR on behalf of the community (see § 680.41(l)(2)(ii)).

PQS and IPQ from the Bristol Bay red king crab, Bering Sea snow crab, Eastern Aleutian Islands golden king crab, St. Matthew Island blue king crab, and Pribilof red and blue king crab fisheries are subject to a ROFR. Section 3.1.3 of the RIR/IRFA describes the specific amounts of PQS and IPQ that were, and are, subject to ROFR.

Under the ROFR, an eligible crab community entity is provided an opportunity to meet the same terms and conditions being offered to a proposed buyer of a proposed sale of PQS or IPQ. If an eligible crab community entity can meet the terms and conditions of a proposed sale, then the eligible crab community entity receives by transfer the PQS, IPQ, and any other goods instead of the proposed buyer. For a more detailed summary of ROFR, see section 3.1.3 of the RIR/IRFA.

The CR Program included a ROFR to provide eligible crab communities an opportunity to retain crab PQS, IPQ, and other goods before they are transferred to another buyer who could then choose to use that PQS, IPQ, and other goods outside of the community. Such a transfer could adversely affect the economic stability of the community. The ROFR is intended to strike a balance between the interest of communities historically reliant on crab processing to retain that processing capacity within their communities, and the interest of PQS or IPQ holders to be able to engage in open market transfers of PQS, IPQ, and other goods.

**ROFR Contract Terms**

The ROFR is administered under the CR Program through contractual arrangements between eligible crab community entities and PQS/IPQ holders. Persons who hold PQS/IPQ that is subject to a ROFR must enter into a contract with the eligible crab community entity eligible to exercise a ROFR for those PQS/IPQ shares. The terms required in a ROFR contract between an eligible crab community entity and PQS/IPQ holder were established with implementation of the CR Program and are set forth in Chapter 11 of the FMP. ROFR applies to any proposed sale of PQS, and sales of IPQ, if more than 20 percent of the PQS holders' community based IPQ in the fishery were processed outside of the community by another company (intra-company transfers within a region are excluded) in three of the preceding five years. Intra-company transfers within a region and transfers of PQS for continued use in the community are exempt from (*i.e.,* do not trigger) the ROFR. The ROFR contract terms require that in order to complete a transfer under a ROFR, an eligible crab community entity must meet ''the same terms and conditions of the underlying [proposed sale] agreement and will include all processing shares and other goods included in that agreement.''

The ROFR contract terms also state that all terms of any ROFR and contract entered into related to ROFR will be enforced through civil law. Additional details on the rationale for the civil enforcement of the terms in a ROFR contract are provided in the EIS, RIR, and Social Impact Assessment prepared for the CR Program, and the final rule implementing the CR Program (March 2, 2005, 70 FR 10174).

An eligible crab community entity must meet two important requirements to complete a ROFR and receive PQS, IPQ, or other goods associated with a proposed sale. The eligible crab community entity must: (1) Exercise its ROFR, that is, provide a clear commitment to complete a purchase agreement within a specific time frame; and (2) perform under the ROFR, that is, meet all of the terms and conditions of the underlying agreement for the proposed sale within a specific time frame.

To exercise the ROFR, an eligible crab community entity must provide the seller of PQS or IPQ subject to a ROFR with notice of its intent to exercise the ROFR and earnest money in the amount of 10 percent of the contract amount or $500,000, whichever is less, within 60 days of notice of a sale and receipt of the contract defining the sale's terms. To perform the ROFR, the eligible crab community entity must meet the terms and conditions of the proposed sale (*i.e.,* complete the sale) within 120 days, or within the time specified in the proposed sales contract, whichever is longer. If an eligible crab community entity does not exercise its ROFR, or it cannot perform under the ROFR contract, then the open market sale may proceed.

**Revising ROFR Contract Terms**

The CR Program, including the ROFR contract terms, was implemented under authority provided at section 313(j)(1) of the Magnuson-Stevens Act. Section 313(j)(3) states that after initial implementation of the CR Program, the Council may submit and the Secretary may implement changes to conservation and management measures for crab fisheries of the Bering Sea and Aleutian Islands to achieve on a continuing basis the purposes identified by the Council. This provision allows the Council to

recommend, and NMFS to adopt, revisions to the required terms of a ROFR contract. Proposed Amendment 44 to the FMP would modify several of the existing ROFR contract terms and add two additional contract terms. For reasons provided in the notice of availability for Amendment 44 (80 FR 61150, October 9, 2015) and this proposed rule, the Council and NMFS have determined that the modifications to the ROFR contract terms and regulations governing ROFR that would be made by proposed Amendment 44 and this proposed rule improve the achievement of the purposes of ROFR that were identified by the Council when it adopted the CR Program.

As noted earlier, the terms in a ROFR contract are enforced through civil contract law rather than through regulations implemented by NMFS. Amendment 44 to the FMP and this proposed rule would not change the civil enforcement of the terms in a ROFR contract. The proposed rule would revise regulations to implement Amendment 44 and to amend the CR Program. Regulations implemented by NMFS are enforced by NMFS. Therefore, the regulatory changes in this proposed rule (*i.e.,* measures that are more than solely amendments to the FMP modifying the terms in a ROFR contract) would be subject to enforcement by NMFS.

**Need for Action**

In developing the CR Program, the Council and NMFS recognized the unique historical relationship between eligible crab communities and processors associated with those communities, and established ROFR provisions to provide opportunities for eligible crab communities to be notified and intervene in sales of crab processing assets important to those communities. However, with experience gained from implementation, the Council has determined that some of the ROFR contract terms and the lack of regulatory requirements to ensure adequate notification and tracking of PQS and IPQ transfers are limiting the effectiveness of the ROFR provisions.

Stakeholders, including representatives from the eight eligible crab community entities that can exercise a ROFR, noted several concerns with ROFR contract terms that could hinder an eligible crab community entity from effectively exercising and performing under a ROFR. Eligible crab community entities also supported additional regulatory provisions to ensure proper notification of proposed sales. Holders of PQS/IPQ subject to a ROFR concurred that several changes to the ROFR contract terms and notification requirements could improve the ability of eligible crab community entities to exercise and perform under a ROFR without unduly limiting open market transfers of PQS, IPQ, and other goods. The Council reviewed and analyzed these concerns in a series of documents that have been consolidated under the RIR/IRFA prepared for Amendment 44 and this proposed rule (see **ADDRESSES**). The Council recommended the provisions comprising Amendment 44 and this proposed rule at its February 2013 and its October 2014 meetings.

Proposed Amendment 44 and this proposed rule are intended to address four categories of concern that stakeholders have for the existing ROFR contract terms and regulations implementing ROFR. These are: (1) Inadequate time for an eligible crab community entity to exercise and perform under a ROFR; (2) ROFR contract terms that allow a ROFR to lapse; (3) ROFR contract terms that do not allow an eligible crab community entity and a PQS/IPQ holder to mutually agree to the specific assets subject to a ROFR and to exclude ''other goods'' if desired; and (4) the lack of verification that proper notification and reporting of proposed sales between PQS/IPQ holders and eligible crab community entities has occurred.

**Summary of Proposed Amendment 44**

The specific provisions of proposed Amendment 44 are described in detail in the Notice of Availability published by NMFS on October 9, 2015 (80 FR 61150). The following briefly summarizes the provisions of proposed Amendment 44.

If approved by NMFS, Amendment 44 would modify the ROFR contract term specifying the amount of time to exercise and perform under a ROFR. Amendment 44 would increase the time allowed for an eligible crab community entity to exercise a ROFR from 60 days to 90 days from receipt of the sales contract. This modification would also increase the time allowed for an eligible crab community entity to perform under the ROFR from 120 days to 150 days. The time period to exercise and the time period to perform under a ROFR begin on the date of receipt of the sales contract by the eligible crab community entity and run concurrently. The extension of both time periods is intended to help accommodate eligible crab community entities when deciding whether to exercise their ROFR, but also continue to recognize that time may be of the essence for a PQS holder or buyer under a contract.

Amendment 44 would remove the ROFR contract term that allows a ROFR to lapse if the IPQ derived from the PQS subject to ROFR was processed outside the community of origin for a period of three consecutive years. This amendment would allow a ROFR to remain in effect for PQS subject to a ROFR regardless of the location in which the IPQ associated with that PQS was processed. However, if approved, Amendment 44 would not reinstate a ROFR that lapsed prior to implementation of Amendment 44. The Council determined, and NMFS agrees, that this amendment would strengthen the connection between PQS and the community from which it originated, by maintaining the right regardless of whether the yielded IPQ is used outside the community for extended periods. By maintaining the right despite use of IPQ outside of the community, the eligible crab community entity and the community of origin that it represents would maintain an interest in the PQS into the future.

Amendment 44 also would remove the ROFR contract term stating that a ROFR will lapse if an eligible crab community entity fails to exercise its ROFR after it is triggered by a transfer of PQS and replace it with a ROFR contract term that would require the recipient of a PQS transfer to enter into a new ROFR contract with an eligible crab community entity of its choosing in the designated region of the PQS. This amendment would ensure that eligible crab community entities within the designated region of the PQS retain a ROFR on that PQS even if the original eligible crab community entity chooses not to exercise a ROFR.

ROFR contract terms currently require that the ROFR apply to all terms and conditions of the underlying sale agreement, including all processing shares and other goods included in the agreement. Amendment 44 would revise this ROFR contract term to specify that, ''Any right of first refusal must be on the same terms and conditions of the underlying agreement and will include all processing shares and other goods included in this agreement, or to any subset of those assets, as otherwise agreed to by the PQS holder and the community entity.'' The proposed addition of the last clause in this ROFR contract term would allow a PQS holder and an eligible crab community entity to negotiate what assets may be subject to a ROFR. This would provide PQS holders and eligible crab community entities with more flexibility compared to the status quo. For example, it would allow an eligible crab community entity to reach an agreement with the PQS

holder that the ROFR would only apply to the PQS, and not to any other goods associated with a proposed sale.

Amendment 44 also would establish two new ROFR contract terms. First, Amendment 44 would add a ROFR contract term that requires a PQS holder to notify the eligible crab community entity of any proposed transfer of IPQ or PQS subject to ROFR, regardless of whether the PQS holder believes the proposed transfer triggers the right. Second, Amendment 44 would add a ROFR contract term that requires a PQS holder to annually notify the eligible crab community entity of the location at which IPQ derived from PQS subject to a ROFR was processed and whether that IPQ was processed by the PQS holder. Both of these proposed notifications would provide the eligible crab community entities with more information on what is occurring with the PQS for which they hold a ROFR.

If Amendment 44 is approved, all ROFR contracts would be required to contain the newly revised ROFR contract terms. Because Amendment 44 would modify the terms required to be included in a ROFR contract, a PQS/IPQ holder and an eligible crab community entity would need to establish a new or revised ROFR contract to contain all of these terms.

**The Proposed Rule**

This proposed rule contains three actions. The first action would implement those aspects of Amendment 44 that require implementing regulations. The second action would implement the regulatory amendment adopted by the Council. The third action would implement minor administrative changes to the CR Program regulations to improve the application and reporting practices for participants in the CR Program. The following paragraphs provide additional detail on these proposed actions.

*Action 1: Regulatory Revisions Needed To Implement Amendment 44*

Most of the provisions of Amendment 44 only modify the ROFR contract terms contained in the FMP and do not require adjustments or additions to regulations implementing ROFR at 50 CFR part 680. However, one provision of proposed Amendment 44 requires modification to regulations at § 680.41(i)(8) governing transfers of PQS subject to ROFR.

As explained above, a ROFR would no longer lapse if an eligible crab community entity fails to exercise its ROFR after the ROFR is triggered by a transfer of PQS under proposed Amendment 44. Instead, proposed Amendment 44 would require the recipient of a PQS transfer, or buyer, to enter into a new ROFR contract with an eligible crab community entity of its choosing in the designated region of the PQS. The buyer could enter into a new ROFR contract with the eligible crab community entity that held the ROFR with the seller, or the buyer could enter into a new ROFR contract with an eligible crab community entity that represents an eligible crab community within the region for which the PQS is designated. This provision of Amendment 44 would ensure that one eligible crab community entity within the designated region of the PQS retains a ROFR on that PQS even if the original eligible crab community entity does not exercise its ROFR. This provision is intended to strengthen the ROFR program by maintaining a link between PQS and eligible crab communities in perpetuity. In addition, the proposed provision may provide the original eligible crab community entity that is not able to exercise a ROFR with another opportunity to use ROFR at some point in the future, should it be triggered again through a proposed sale of the PQS.

Because the buyer's choice of an eligible crab community entity would occur at the time of transfer of the PQS, regulations at § 680.41(i)(8) governing transfer of PQS would need to be modified to require the seller to certify that the eligible crab community entity did not exercise its ROFR within the time provided and to require the buyer to certify that the buyer has entered into a ROFR contract with an eligible crab community entity in the designated region of the PQS. These proposed changes to § 680.41(i)(8) would not alter the current requirement that NMFS wait 10 days before approving a transfer of PQS subject to ROFR when such transfer triggers the ROFR.

*Action 2: Regulatory Revisions Needed To Implement the Regulatory Amendment*

At the time it took action on Amendment 44, the Council also recommended that holders of PQS/IPQ subject to ROFR provide NMFS with specific certifications regarding notice to ROFR holders and the existence of ROFR contracts when submitting an application to transfer PQS or when annually applying for IPQ. The Council's recommendations for certifications to NMFS do not require modifications to the FMP but require modifications to the regulations implementing ROFR in 50 CFR part 680.

First, this proposed rule would modify regulations at § 680.4(f)(2) to require an applicant, as part of the Application for Annual Crab IPQ Permit, to certify to NMFS that a ROFR contract that includes the required ROFR contract terms specified in Chapter 11 of the FMP exists between the applicant and the eligible crab community entity that holds the ROFR for that PQS/IPQ. If Amendment 44 is approved, all ROFR contracts would be required to contain the newly revised ROFR contract terms. Because Amendment 44 would modify the terms required to be included in a ROFR contract, a PQS/IPQ holder and an eligible crab community entity would need to establish a new or revised ROFR contract to contain all of these terms and the PQS/IPQ holder would need to certify annually that a ROFR contract was in place. By including this certification as part of the annual application for IPQ, NMFS realizes that if an applicant for IPQ is unable to establish a revised ROFR contract with an eligible crab community entity and provide that confirmation to NMFS in the annual application for crab IPQ permit prior to the date that application is due, then NMFS would consider the application to be incomplete. In that case, NMFS would withhold issuance of IPQ until this requirement is met.

Second, this proposed rule would modify regulations at § 680.41(i)(8) and (9) to require specific certifications by the seller or the buyer when transferring PQS subject to ROFR. If a transfer of PQS triggers a ROFR, regulations at § 680.41(i)(8) would require the seller to certify, as part of the application to transfer PQS, that the PQS holder notified the eligible crab community entity holding the ROFR for that PQS of the proposed transfer at least 90 days prior to the date of the transfer application, and that the eligible crab community entity did not exercise its ROFR during that period. If a transfer of PQS does not trigger a ROFR, regulations at § 680.41(i)(9) would be modified to require the buyer and the eligible crab community entity to certify, as part of the application to transfer PQS, either that the eligible crab community entity wishes to permanently waive ROFR for the PQS or that the buyer and the eligible crab community entity completed a ROFR contract that includes the ROFR contract terms specified in Chapter 11 of the FMP. NMFS would not complete a transfer of PQS until these requirements are met.

The Council determined and NMFS agrees that these additional notice requirements would directly address the concerns of eligible crab community entities and PQS/IPQ holders that there

may not be adequate information sharing between the parties subject to a ROFR contract. These notices would ensure that all parties have accurate and up-to-date information concerning the use of PQS and IPQ, as well as any sales of PQS. For additional detail on these proposed notice requirements, see section 3.2.5 of the RIR/IRFA.

*Action 3: Administrative Changes*

NMFS proposes two minor administrative changes to CR Program regulations. First, NMFS proposes revising regulations at § 680.4(d) to separate the current combined application for IFQ/IPQ into two separate applications, an application for IFQ and an application for IPQ. This proposed revision is intended to reduce confusion among applicants who sometimes misunderstand the requirements for the combined IFQ/IPQ application and would improve the ability of applicants to correctly provide the necessary information. This revision would allow applicants for IFQ to use an application form specific to IFQ, and applicants for IPQ to use an application form specific to IPQ. Except for the proposed modification to the annual IPQ application described above in the ''Action 2: Regulatory Revisions Needed To Implement the Regulatory Amendment'' section, the proposed changes would not modify the specific information currently required of IFQ or IPQ applicants, but would change the application form required to be submitted and the format of the application form.

Second, NMFS proposes revisions to reporting requirements for crab harvesting cooperatives at § 680.21(b)(1). Currently, regulations at § 680.4(f) require each member of a crab harvesting cooperative to submit to NMFS an Application for Annual Crab IFQ Permit, and regulations at § 680.21(b) require a crab harvesting cooperative to submit to NMFS a copy of each member's Application for Annual Crab IFQ Permit along with the cooperative's Application for Annual Crab Harvesting Cooperative IFQ Permit. NMFS has determined that while the identification of cooperative members is critical to the cooperative application process, NMFS can obtain this information through less burdensome means. Therefore, NMFS proposes revising the regulations at § 680.21(b)(1) so that a crab harvesting cooperative would be responsible only for submitting a list of the names of each cooperative member with the cooperative's annual IFQ application. Under the proposed rule, crab harvesting cooperatives would no longer be required to submit copies of each member's annual IFQ application. NMFS notes that the proposed rule does not modify the requirements at § 680.4(f) and each cooperative member would continue to be responsible for submitting to NMFS a complete annual IFQ permit application by the deadline of June 15. This proposed change would provide NMFS with necessary information while reducing duplicative reporting requirements for crab harvesting cooperatives.

**Classification**

Pursuant to section 304(b)(1)(A) and 305(d) of the Magnuson-Stevens Act, the NMFS Assistant Administrator has determined that this proposed rule is consistent with the FMP, other provisions of the Magnuson-Stevens Act, and other applicable law, subject to further consideration of comments received during the public comment period.

This proposed rule has been determined to be not significant for the purposes of Executive Order 12866.

*Initial Regulatory Flexibility Analysis (IRFA)*

An IRFA was prepared, as required by section 603 of the Regulatory Flexibility Act. The IRFA describes the economic impact this proposed rule, if adopted, would have on small entities. Copies of the RIR/IRFA prepared for this proposed rule are available from NMFS (see **ADDRESSES**).

The IRFA for this proposed action describes the action, why this action is being proposed, the objectives and legal basis for the proposed rule, the type and number of small entities to which the proposed rule would apply, and the projected reporting, recordkeeping, and other compliance requirements of the proposed rule. It also identifies any overlapping, duplicative, or conflicting Federal rules and describes any significant alternatives to the proposed rule that would accomplish the stated objectives of the Magnuson-Stevens Act and other applicable statues and that would minimize any significant adverse economic impact of the proposed rule on small entities. The description of the proposed action, its purpose, and its legal basis are described in the preamble and are not repeated here. The IRFA prepared for this proposed rule incorporates by reference an extensive RIR/FRFA prepared for Amendments 18 and 19 to the FMP that detail the impacts of the CR Program on small entities.

The proposed rule includes three separate actions. Action 1 includes regulatory revisions to implement Amendment 44. The proposed revisions would require the buyer of PQS to certify to NMFS that the buyer has entered into a ROFR contract with an eligible crab community entity in the designated region of the PQS.

Action 2 would require PQS holders to provide two notifications to NMFS regarding the status of their ROFR. The first certification would require PQS holders applying to receive IPQ to attest that a ROFR contract that includes the required ROFR contract terms exists between the applicant and the eligible crab community entity that holds the ROFR for that PQS/IPQ. The second certification would require the seller of PQS to certify to NMFS that the seller provided the eligible crab community entity with notice of the proposed sale at least 90 days prior to the date of the transfer application and that the entity did not exercise ROFR during that time period. These notifications would be incorporated into the Application for Annual Crab IPQ and the Application for Transfer of Crab QS or PQS, respectively.

The small entities that would be directly regulated by Action 1 and Action 2 are persons that hold PQS or IPQ under the CR Program. Currently, 21 entities hold PQS or IPQ subject (now or previously) to ROFR. Estimates of the number of large entities were made, based on available records of revenue, employment information, and known affiliations among these entities. Of these 21 entities, 10 are estimated to be large entities and 11 are deemed to be small entities. It is possible that additional entities could be directly regulated under the proposed rule if an entity that does not already hold PQS receives PQS by transfer. The new PQS holder would be directly regulated because the entity would be required to certify to NMFS that they have entered into a ROFR contract. It is not possible to estimate whether these new PQS holders would be small entities for purposes of this proposed rule.

Action 3 would make minor administrative changes to clarify permit application procedures for IFQ holders and IPQ holders, and reduce reporting requirements for crab cooperatives that are directly regulated under the CR Program. Currently, there are 10 crab harvesting cooperative entities. Based on available records of revenue, and known affiliations among these entities, 4 of the entities are estimated to be large entities and 6 are deemed to be small entities. Because these changes would reduce the reporting burden for all crab harvesting cooperatives, Action 3 would not have an adverse impact on directly regulated small entities.

The certifications in the proposed rule are straightforward, simple and are provided annually or at the time of a transfer of shares as part of applications. While the new notification requirements would add administrative reporting requirements for 11 PQS/IPQ holders that are small entities, the Council determined that the administrative burden associated with the notification requirements would be minimal and would not negatively impact these entities.

*Duplicate, Overlapping, or Conflicting Federal Rules*

NMFS has not identified any duplication, overlap, or conflict between this proposed action and existing Federal rules.

*Recordkeeping and Reporting Requirements*

The recordkeeping and reporting requirements would be increased slightly under this proposed rule. This proposed rule would include new reporting requirements for PQS/IPQ holders. The PQS/IPQ holders would be required to certify to NMFS that a current ROFR contract is in place when applying for IPQ and notify NMFS of the status of the ROFR when transferring PQS or IPQ. These additional reporting requirements would be relatively straightforward and simple, and NMFS proposes including these certifications requirements into the Application for Annual Crab IPQ and the Application for Transfer of Crab PQS that are already required for directly regulated entities to receive IPQ or to transfer PQS or IPQ. Therefore, the additional recordkeeping and reporting requirements associated with the proposed rule would be minimal.

*Collection-of-Information Requirements*

This proposed rule contains collection-of-information requirements subject to review and approval by the Office of Management and Budget (OMB) under the Paperwork Reduction Act (PRA). These requirements have been submitted to OMB for approval under OMB Control Number 0648–0514. Public reporting burden is estimated to average per response: 1.5 hours for the Annual Application for Crab IFQ Permit; 1.5 hours for the Annual Application for Crab IPQ Permit; 1 hour for the Application for an Annual Crab Harvesting Cooperative IFQ permit; and 2 hours for Application to Transfer Crab QS or PQS. These estimates include the time for reviewing instructions, searching existing data sources, gathering and maintaining the data needed, and completing and reviewing the collection of information.

Public comment is sought regarding whether this proposed collection of information is necessary for the proper performance of the functions of the agency, including whether the information shall have practical utility; the accuracy of the burden statement; ways to enhance quality, utility, and clarity of the information to be collected; and ways to minimize the burden of the collection of information, including through the use of automated collection techniques or other forms of information technology. Send comments on these or any other aspects of the collection of information, to NMFS (see ADDRESSES), and by email to *OIRA_Submission@omb.eop.gov* or fax to 202–395–7285.

Notwithstanding any other provision of the law, no person is required to respond to, nor shall any person be subject to penalty for failure to comply with, a collection of information subject to the requirement of the PRA, unless that collection of information displays a currently valid OMB control number.

**List of Subjects in 50 CFR Part 680**

Alaska, Fisheries, Reporting and recordkeeping requirements.

Dated: October 15, 2015.

**Samuel D. Rauch III,**

*Deputy Assistant Administrator for Regulatory Programs, National Marine Fisheries Service.*

For the reasons set out in the preamble, 50 CFR part 680 is proposed to be amended as follows:

## PART 680—SHELLFISH FISHERIES OF THE EXCLUSIVE ECONOMIC ZONE OFF ALASKA

■ 1. The authority citation for 50 CFR part 680 continues to read as follows:

**Authority:** 16 U.S.C. 1862; Pub. L. 109–241; Pub. L. 109–479.

■ 2. In § 680.4,

■ a. Revise paragraphs (d)(3), (e)(1), (e)(3), (f) heading, and (f)(2)(ii);

■ b. Redesignate paragraphs (f)(2)(iv) and (f)(2)(v) as (f)(2)(v) and (f)(2)(vi), respectively;

■ c. Add paragraph (f)(2)(iv);

The revisions and additions to read as follows:

**§ 680.4 Permits.**

* * * * *

(d) * * *

(3) On an annual basis, the Regional Administrator will issue a crab IFQ permit to a person who submits a complete Application for Annual Crab Individual Fishing Quota (IFQ) Permit, described at paragraph (f) of this section, that is subsequently approved by the Regional Administrator.

* * * * *

(e) * * *

(1) A crab IPQ permit authorizes the person identified on the permit to receive/process the IPQ crab identified on the permit during the crab fishing year for which the permit is issued, subject to conditions of the permit. A crab IPQ permit is valid under the following circumstances:

* * * * *

(3) On an annual basis, the Regional Administrator will issue a crab IPQ permit to a person who submits a complete Application for Annual Crab Individual Processing Quota (IPQ) Permit, described at paragraph (f) of this section, that is subsequently approved by the Regional Administrator.

* * * * *

*(f) Contents of annual applications for crab IFQ and IPQ permits.*

* * * * *

(2) * * *

(ii) *Crab IFQ or IPQ permit identification.* Indicate the type of crab IFQ or IPQ permit for which applicant is applying by QS fishery(ies) and indicate (YES or NO) whether applicant has joined a crab harvesting cooperative. If YES, enter the name of the crab harvesting cooperative(s) the applicant has joined for each crab fishery.

* * * * *

(iv) *Certification of ROFR contract for crab IPQ permit.* Indicate (YES or NO) whether any of the IPQ for which the applicant is applying to receive is subject to right of first refusal (ROFR). If YES certify (YES or NO) whether there is a ROFR contract currently in place between the applicant and the ECC entity holding the ROFR for the IPQ that includes the required ROFR contract terms specified in Chapter 11 section 3.4.4.1.2 of the Fishery Management Plan for Bering Sea/Aleutian Islands King and Tanner Crabs.

* * * * *

■ 3. In § 680.21, revise paragraph (b)(1) to read as follows:

**§ 680.21 Crab harvesting cooperatives.**

* * * * *

(b) * * *

(1) *June 15 application deadline.* A completed Application for Annual Crab Harvesting Cooperative Individual Fishing Quota (IFQ) Permit listing the name of each member of the crab harvesting cooperative must be submitted annually by each crab harvesting cooperative and received by NMFS no later than June 15 (or postmarked by this date, if sent via U.S.

mail or a commercial carrier) for the upcoming crab fishing year for which the crab harvesting cooperative is applying to receive IFQ. If a complete application is not received by NMFS by this date, or postmarked by this date, the crab harvesting cooperative will not receive IFQ for the upcoming crab fishing year. In the event that NMFS has not received a complete and timely application by June 15, NMFS will presume that the application was timely filed if the applicant can provide NMFS with proof of timely filing. Each crab harvesting cooperative member is responsible for submitting a completed Application for Annual Crab Individual Fishing Quota Permit to NMFS by June 15 pursuant to § 680.4.

* * * * *

■ 4. In § 680.41, revise paragraphs (i)(8) and (9) to read as follows:

**§ 680.41 Transfers of QS, PQS, IFQ or IPQ.**

* * * * *

(i) * * *

(8) In the case of an application for transfer of PQS or IPQ for use outside an ECC that has designated an entity to represent it in exercise of ROFR under paragraph (l) of this section:

(i) The Regional Administrator will not act upon the application for a period of 10 days. At the end of that time period, the application will be approved pending meeting the criteria set forth in paragraph (i) of this section.

(ii) The person applying to transfer PQS subject to ROFR must include an affidavit certifying that the ECC entity was provided with notice of the proposed transfer at least 90 days prior to the date of the transfer application and that the ECC entity did not exercise its ROFR during that period.

(iii) The person applying to receive the PQS must include an affidavit certifying that a ROFR contract that includes the ROFR contract terms specified in Chapter 11 section 3.4.4.1.2 of the Fishery Management Plan for Bering Sea/Aleutian Islands King and Tanner Crabs has been completed with an ECC entity eligible to hold a ROFR under paragraph (l) of this section and that represents an EEC within the region for which the PQS is designated.

(9) In the case of an application for transfer of PQS for use within an ECC that has designated an entity to represent it in exercise of ROFR under paragraph (l) of this section, the Regional Administrator will not approve the application unless the proposed recipient of the PQS and the ECC entity provide an affidavit to the Regional Administrator certifying that either the ECC wishes to permanently waive ROFR for the PQS or that a ROFR contract that includes the ROFR contract terms specified in Chapter 11 section 3.4.4.1.2 of the Fishery Management Plan for Bering Sea/Aleutian Islands King and Tanner Crabs has been completed by the proposed recipient of the PQS and the ECC entity.

* * * * *

[FR Doc. 2015–26844 Filed 10–21–15; 8:45 am]

BILLING CODE 3510–22–P

# Notices

Federal Register

Vol. 80, No. 204

Thursday, October 22, 2015

This section of the FEDERAL REGISTER contains documents other than rules or proposed rules that are applicable to the public. Notices of hearings and investigations, committee meetings, agency decisions and rulings, delegations of authority, filing of petitions and applications and agency statements of organization and functions are examples of documents appearing in this section.

## DEPARTMENT OF COMMERCE

### International Trade Administration

### Subsidy Programs Provided by Countries Exporting Softwood Lumber and Softwood Lumber Products to the United States; Request for Comment

**AGENCY:** Enforcement and Compliance, International Trade Administration, Department of Commerce.

**SUMMARY:** The Department of Commerce (Department) seeks public comment on any subsidies, including stumpage subsidies, provided by certain countries exporting softwood lumber or softwood lumber products to the United States during the period January 1, 2015 through June 30, 2015.

**DATES:** Comments must be submitted within 30 days after publication of this notice.

**ADDRESSES:** *See* the Submission of Comments section below.

**FOR FURTHER INFORMATION CONTACT:** James Terpstra, Office III, Enforcement and Compliance, International Trade Administration, U.S. Department of Commerce, 14th Street and Constitution Avenue NW., Washington, DC 20230; telephone: (202) 482–3965.

**SUPPLEMENTARY INFORMATION:**

#### Background

On June 18, 2008, section 805 of Title VIII of the Tariff Act of 1930 (the Softwood Lumber Act of 2008) was enacted into law. Under this provision, the Secretary of Commerce is mandated to submit to the appropriate Congressional committees a report every 180 days on any subsidy provided by countries exporting softwood lumber or softwood lumber products to the United States, including stumpage subsidies.

The Department submitted its last subsidy report on June 16, 2015. As part of its newest report, the Department intends to include a list of subsidy programs identified with sufficient clarity by the public in response to this notice.

#### Request for Comments

Given the large number of countries that export softwood lumber and softwood lumber products to the United States, we are soliciting public comment only on subsidies provided by countries whose exports accounted for at least one percent of total U.S. imports of softwood lumber by quantity, as classified under Harmonized Tariff Schedule code 4407.1001 (which accounts for the vast majority of imports), during the period January 1, 2015 through June 30, 2015. Official U.S. import data published by the United States International Trade Commission Tariff and Trade DataWeb indicate that only two countries, Canada and Chile, exported softwood lumber to the United States during that time period in amounts sufficient to account for at least one percent of U.S. imports of softwood lumber products. We intend to rely on similar previous six-month periods to identify the countries subject to future reports on softwood lumber subsidies. For example, we will rely on U.S. imports of softwood lumber and softwood lumber products during the period July 1, 2015 through December 31, 2015, to select the countries subject to the next report.

Under U.S. trade law, a subsidy exists where an authority: (i) Provides a financial contribution; (ii) provides any form of income or price support within the meaning of Article XVI of the GATT 1994; or (iii) makes a payment to a funding mechanism to provide a financial contribution to a person, or entrusts or directs a private entity to make a financial contribution, if providing the contribution would normally be vested in the government and the practice does not differ in substance from practices normally followed by governments, and a benefit is thereby conferred.[1]

Parties should include in their comments: (1) The country which provided the subsidy; (2) the name of the subsidy program; (3) a brief description (at least 3–4 sentences) of the subsidy program; and (4) the government body or authority that provided the subsidy.

[1] *See* section 771(5)(B) of the Tariff Act of 1930, as amended.

#### Submission of Comments

Persons wishing to comment should file comments by the date specified above. Comments should only include publicly available information. The Department will not accept comments accompanied by a request that a part or all of the material be treated confidentially due to business proprietary concerns or for any other reason. The Department will return such comments or materials to the persons submitting the comments and will not include them in its report on softwood lumber subsidies. The Department requests submission of comments filed in electronic Portable Document Format (PDF) submitted on CD–ROM or by email to the email address of the EC Webmaster, below.

The comments received will be made available to the public in PDF on the Enforcement and Compliance Web site at the following address: *http://enforcement.trade.gov/sla2008/sla-index.html.* Any questions concerning file formatting, access on the Internet, or other electronic filing issues should be addressed to Laura Merchant, Enforcement and Compliance Webmaster, at (202) 482–0367, email address: *webmaster_support@trade.gov.*

All comments and submissions in response to this Request for Comment should be received by the Department no later than 5 p.m. Eastern Standard Time on the above-referenced deadline date.

Dated: October 16, 2015.

**Christian Marsh,**

*Deputy Assistant Secretary for Antidumping and Countervailing Duty Operations.*

[FR Doc. 2015–26964 Filed 10–21–15; 8:45 am]

BILLING CODE 3510–DS–P

## DEPARTMENT OF COMMERCE

### National Oceanic and Atmospheric Administration

### Proposed Amendment to the Puerto Rico Coastal Zone Management Program

**AGENCY:** National Oceanic and Atmospheric Administration (NOAA), Office for Coastal Management, National Ocean Service, Department of Commerce.

**ACTION:** Availability of program change submission in Spanish; extension of comment period.

**SUMMARY:** The National Oceanic and Atmospheric Administration's (NOAA) Office for Coastal Management is announcing the availability of a Spanish language version of analysis documents submitted by the Commonwealth of Puerto Rico supporting a request for approval of changes to the Puerto Rico Coastal Zone Management Program (PRCZMP), and an extension of the public review and comment period on the program changes.

**ADDRESSES:** Please send written comments to Joelle Gore, Stewardship Division Chief (Acting), NOAA Office for Coastal Management, NOS/OCM/SD, 1305 East-West Highway, 10th Floor, Room 10622, N/OCM6, Silver Spring, Maryland 20910, or *Joelle.Gore@noaa.gov.*

**FOR FURTHER INFORMATION CONTACT:** Jackie Rolleri, at *Jackie.Rolleri@noaa.gov.*

**SUPPLEMENTARY INFORMATION:**

## Background

On July 17, 2015, the Office for Coastal Management published a **Federal Register** Notice soliciting comments on a request by the Commonwealth of Puerto Rico for approval of changes to the PRCZMP (80 FR 42479 (July 17, 2015)). The **Federal Register** notice included a notice of a September 2, 2015, public hearing on the program changes.

At the September 2, 2015, public hearing, requests were made by members of the public to have a Spanish language version of the program change analysis documents submitted by the Commonwealth in support of the requested approval, along with an extension of the comment period on the program changes. The Commonwealth has translated the analysis documents and made it available for public review and comment on its Web site under the heading ''Solicitud de aprobación de cambios al Programa.'' The documents may be found at: *http://www.drna.gobierno.pr/oficinas/arn/recursosvivientes/costasreservasrefugios/pmzc/Cambios-rutinarios-PMZC.*

Written comments from the public on the Commonwealth's request for approval of changes to the PRCZMP will continue to be accepted through 30 days from the date of publication of this **Federal Register** notice.

Comments should address the question of whether the PRCZMP, as changed, continues to meet the requirements for approval to participate in the federal Coastal Zone Management Program as described in section 306 of the federal Coastal Zone Management Act, and its implementing regulations at 15 CFR part 923. NOAA is particularly interested in comments addressing the requirements for the authorities and organization of coastal management programs found at 15 CFR part 923, subpart E, and opportunities for meaningful public participation in the decision-making process for the program under 15 CFR part 923, subpart F. Comments regarding implementation issues should be specific to how the changes to the program have affected implementation.

Federal Domestic Assistance Catalog 11.419 Coastal Zone Management Program Administration

Dated: October 14, 2015.

**John King,**

*Deputy Director, Office for Coastal Management, National Ocean Service, National Oceanic and Atmospheric Administration.*

[FR Doc. 2015–26840 Filed 10–21–15; 8:45 am]

BILLING CODE 3510–08–P

---

## DEPARTMENT OF COMMERCE

## National Oceanic and Atmospheric Administration

**RIN 0648–XE131**

## Takes of Marine Mammals Incidental to Specified Activities; U.S. Navy Civilian Port Defense Activities at the Ports of Los Angeles/Long Beach, California

**AGENCY:** National Marine Fisheries Service (NMFS), National Oceanic and Atmospheric Administration (NOAA), Commerce.

**ACTION:** Notice; issuance of an incidental harassment authorization.

**SUMMARY:** In accordance with regulations implementing the Marine Mammal Protection Act (MMPA), notification is hereby given that NMFS has issued an Incidental Harassment Authorization (IHA) to the U.S. Navy (Navy) to take marine mammals, by harassment, incidental to Civilian Port Defense training activities within and near the Ports of Los Angeles and Long Beach, California.

**DATES:** Effective October 25, 2015, through December 31, 2015.

**FOR FURTHER INFORMATION CONTACT:** John Fiorentino, Office of Protected Resources, NMFS, (301) 427–8477.

**SUPPLEMENTARY INFORMATION:**

## Availability

An electronic copy of the Navy's application, which contains a list of the references used in this document, may be obtained by visiting the internet at: *http://www.nmfs.noaa.gov/pr/permits/incidental/military.htm.* The Navy's final Environmental Assessment (EA), *2015 West Coast Civilian Port Defense,* which also contains a list of the references used in this document, may also be viewed on our Web site. In case of problems accessing these documents, please call the contact listed above (see **FOR FURTHER INFORMATION CONTACT**).

## Background

Sections 101(a)(5)(A) and (D) of the MMPA (16 U.S.C. 1361 *et seq.*) direct the Secretary of Commerce to allow, upon request, the incidental, but not intentional, taking of small numbers of marine mammals by U.S. citizens who engage in a specified activity (other than commercial fishing) within a specified geographical region if certain findings are made and either regulations are issued or, if the taking is limited to harassment, a notice of a proposed authorization is provided to the public for review.

An authorization for incidental takings shall be granted if NMFS finds that the taking will have a negligible impact on the species or stock(s), will not have an unmitigable adverse impact on the availability of the species or stock(s) for subsistence uses (where relevant), and if the permissible methods of taking and requirements pertaining to the mitigation, monitoring and reporting of such takings are set forth. NMFS has defined ''negligible impact'' in 50 CFR 216.103 as ''an impact resulting from the specified activity that cannot be reasonably expected to, and is not reasonably likely to, adversely affect the species or stock through effects on annual rates of recruitment or survival.''

The National Defense Authorization Act of 2004 (NDAA) (Public Law 108–136) removed the ''small numbers'' and ''specified geographical region'' limitations indicated above and amended the definition of ''harassment'' as it applies to a ''military readiness activity'' to read as follows (Section 3(18)(B) of the MMPA): (i) Any act that injures or has the significant potential to injure a marine mammal or marine mammal stock in the wild [Level A Harassment]; or (ii) Any act that disturbs or is likely to disturb a marine mammal or marine mammal stock in the wild by causing disruption of natural behavioral patterns, to a point where such behavioral patterns are abandoned

or significantly altered [Level B Harassment].

Except with respect to certain activities not pertinent here, the MMPA defines ''harassment'' as: Any act of pursuit, torment, or annoyance which (i) has the potential to injure a marine mammal or marine mammal stock in the wild [Level A harassment]; or (ii) has the potential to disturb a marine mammal or marine mammal stock in the wild by causing disruption of behavioral patterns, including, but not limited to, migration, breathing, nursing, breeding, feeding, or sheltering [Level B harassment].

**Summary of Request**

On April 16, 2015, NMFS received a final application from the Navy requesting an IHA for the taking of marine mammals incidental to 2015 Civilian Port Defense activities at the Ports of Los Angeles and Long Beach, California.

The Study Area includes the waters within and near the Ports of Los Angeles and Long Beach, California. Since the Ports of Los Angeles and Long Beach are adjacent and are both encompassed within the larger proposed action area (Study Area) they will be described collectively as Los Angeles/Long Beach (see Figure 2–1 of the application for a map of the Study Area). These activities are classified as military readiness activities. Marine mammals present in the Study Area may be exposed to sound from active acoustic sources (sonar). The Navy is requesting authorization to take 7 marine mammal species by Level B harassment (behavioral). No injurious takes (Level A harassment) of marine mammals are predicted and, therefore, none are being authorized.

**Description of the Specified Activity**

Additional detail regarding the specified activity was provided in our **Federal Register** notice of proposed authorization (80 FR 53658; September 4, 2015; pages 53658–53659); please see that document or the Navy's application for more information.

*Overview of Training Activities*

Civilian Port Defense activities are naval mine warfare exercises conducted in support of maritime homeland defense, per the Maritime Operational Threat Response Plan. These activities are conducted in conjunction with other federal agencies, principally the Department of Homeland Security. The three pillars of Mine Warfare include airborne (helicopter), surface (ship and unmanned vehicles), and undersea (divers, marine mammal systems, and unmanned vehicles), all of which are used in order to ensure that strategic U.S. ports are cleared of mine threats. Civilian Port Defense events are conducted in ports or major surrounding waterways, within the shipping lanes, and seaward to the 300 feet (ft, 91 meters [m]) depth contour. The events employ the use of various mine detection sensors, some of which utilize active acoustics for detection of mines and mine-like objects in and around various ports. Assets used during Civilian Port Defense training include up to four unmanned underwater vehicles, marine mammal systems, up to two helicopters operating (two to four hours) at altitudes as low as 75 to 100 ft (23 to 31 m), explosive ordnance disposal platoons, a Littoral Combat Ship or Landing Dock Platform and AVENGER class ships. The AVENGER is a surface mine countermeasure vessel specifically outfitted for mine countermeasure capability. The proposed Civilian Port Defense activities for Los Angeles/Long Beach include the use of up to 20 bottom placed non explosive mine training shapes. Mine shapes may be retrieved by Navy divers, typically explosive ordnance disposal personnel, and may be brought to beach side locations to ensure that the neutralization measures are effective and the shapes are secured. The final step to the beach side activity is the intelligence gathering and identifying how the mine works, disassembling it or neutralizing it. The entire training event takes place over multiple weeks utilizing a variety of assets and scenarios. The following descriptions detail the possible range of activities which could take place during a Civilian Port Defense training event. This is all inclusive and many of these activities are not included within the analysis of this specific event. Mine detection including towed or hull mounted sources would be the only portion of this event which we are proposing authorization.

*Mine Detection Systems*

Mine detection systems are used to locate, classify, and map suspected mines. Once located, the mines can either be neutralized or avoided. These systems are specialized to either locate mines on the surface, in the water column, or on the sea floor.

- Towed or Hull-Mounted Mine Detection Systems. These detection systems use acoustic and laser or video sensors to locate and classify suspect mines. Helicopters, ships, and unmanned vehicles are used with towed systems, which can rapidly assess large areas.
- Unmanned/Remotely Operated Vehicles. These vehicles use acoustic and video or lasers systems to locate and classify mines. Unmanned/remotely operated vehicles provide mine warfare capabilities in nearshore littoral areas, surf zones, ports, and channels.
- Airborne Laser Mine Detection Systems. Airborne laser detection systems work in concert with neutralization systems. The detection system initially locates mines and a neutralization system is then used to relocate and neutralize the mine.
- Marine Mammal Systems. Navy personnel and Navy marine mammals work together to detect specified underwater objects. The Navy deploys trained bottlenose dolphins and California sea lions as part of the marine mammal mine-hunting and object-recovery system.

Sonar systems to be used during Civilian Port Defense Mine Detection training would include AN/SQQ–32, AN/SLQ–48, AN/AQS–24, and handheld sonars (*e.g.,* AN/PQS–2A). Of these sonar sources, only the AN/SQQ–32 would require quantitative acoustic effects analysis, given its source parameters. The AN/SQQ–32 is a high frequency (between 10 and 200 kilohertz [kHz]) sonar system; the specific source parameters of the AN/SQQ–32 are classified. The AN/AQS–24, AN/SLQ–48 and handheld sonars are considered *de minimis* sources, which are defined as sources with low source levels, narrow beams, downward directed transmission, short pulse lengths, frequencies above known hearing ranges, or some combination of these factors (U.S. Department of the Navy 2013). *De minimis* sources have been determined to not have potential impact to marine mammals.

*Mine Neutralization*

Mine neutralization systems disrupt, disable, or detonate mines to clear ports and shipping lanes. Mine neutralization systems can clear individual mines or a large number of mines quickly. Two types of mine neutralization could be conducted, mechanical minesweeping and influence system minesweeping. Mechanical minesweeping consists of cutting the tether of mines moored in the water column or other means of physically releasing the mine. Moored mines cut loose by mechanical sweeping must then be neutralized or rendered safe for subsequent analysis. Influence minesweeping consists of simulating the magnetic, electric, acoustic, seismic, or pressure signature of a ship so that the mine detonates (no

detonations would occur as part of the proposed training activities). Mine neutralization is included here to present the full spectrum of Civilian Port Defense Mine Warfare activities. The mine neutralization component of the proposed Civilian Port Defense training activities will not result in the incidental taking of marine mammals.

**Dates, Duration, and Geographic Region**

The description of the Dates, Duration, and Geographical Region of authorized activities has not changed from what was provided in the notice of the proposed IHA (80 FR 53658; September 4, 2015; page 53659). Civilian Port Defense training activities are scheduled every year, typically alternating between the east and west coasts of the United States. Civilian Port Defense activities in 2015 are proposed to occur on the U.S. west coast near Los Angeles/Long Beach, California. Civilian Port Defense events are typically conducted in areas of ports or major surrounding waterways and within the shipping lanes and seaward to the 300 ft (91 m) depth contour.

Civilian Port Defense activities would occur at the Ports of Los Angeles/Long Beach from October through December 2015. The training exercise would occur for a period of two weeks in which active sonar would be utilized for two separate periods of four-day events. The AN/SQQ–32 sonar could be active for up to 24 hours a day during these training events; however, the use of the AN/SQQ–32 would not be continuously active during the four-day period. Additional activities would occur during this time and are analyzed within the Navy's Environmental Assessment for 2015 Civilian Port Defense training activities. The Navy has determined there is potential for take as defined under MMPA for military readiness activities. Specifically, take has potential to occur from utilization of active sonar sources. This stressor is the only aspect of the proposed training activities for which this IHA is being requested.

The Ports of Los Angeles and Long Beach combined represent the busiest port along the U.S. West Coast and second busiest in the United States. In 2012 and 2013, approximately 4,550 and 4,500 vessel calls, respectively, for ships over 10,000 deadweight tons arrived at the Ports of Los Angeles and Long Beach (Louttit and Chavez, 2014; U.S. Department of Transportation). This level of shipping would mean approximately 9,000 large ship transits to and from these ports and through the Study Area. By comparison, the next nearest large regional port, Port of San Diego, only had 318 vessel calls in 2012.

**Description of Marine Mammals in the Area of the Specified Activity**

Nineteen marine mammal species are known to occur in the study area, including five mysticetes (baleen whales), nine odontocetes (dolphins and toothed whales), and five pinnipeds (seals and sea lions). The Description of Marine Mammals in the Area of the Specified Activities section has not changed from what was in the notice of the proposed IHA (80 FR 53658; September 4, 2015; page 53660). All species were quantitatively analyzed in the Navy Acoustic Effects Model (NAEMO; see Chapter 6.4 of the application for additional information on the modeling process). After completing the modeling simulations, seven species (each with a single stock) are estimated to potentially be taken by harassment as defined by the MMPA, as it applies to military readiness, during the proposed Civilian Port Defense activities due to use of active sonar sources. Based on a variety of factors, including source characterization, species presence, species hearing range, duration of exposure, and impact thresholds for species that may be present, the remainder of the species were not quantitatively predicted to be exposed to or affected by active acoustic transmissions related to the proposed activities that would result in harassment under the MMPA and, therefore, are not discussed further. Other potential stressors related to the proposed Civilian Port Defense activities (*e.g.,* vessel movement/noise, in water device use) would not result in disruption or alteration of breeding, feeding, or nursing patterns that that would rise to a level of significance under the MMPA. The seven species with the potential to be taken by harassment during the proposed training activities were presented in Table 1 of the notice of the proposed IHA (80 FR 53658; September 4, 2015; page 53660).

The proposed IHA and the Navy's application include a complete description of information on the status, distribution, abundance, vocalizations, density estimates, and general biology of marine mammal species in the Study Area. In addition, NMFS publishes annual stock assessment reports for marine mammals, including some stocks that occur within the Study Area (*http://www.nmfs.noaa.gov/pr/species/mammals*).

**Potential Effects of the Specified Activity on Marine Mammals and Their Habitat**

We provided a detailed discussion of the potential effects of the specified activity on marine mammals and their habitat in the notice of the proposed IHA (80 FR 53658; September 4, 2015; pages 53663–53674). Please see that document for more information.

**Mitigation**

In order to issue an incidental take authorization under section 101(a)(5)(A) and (D) of the MMPA, NMFS must set forth the ''permissible methods of taking pursuant to such activity, and other means of effecting the least practicable adverse impact on such species or stock and its habitat, paying particular attention to rookeries, mating grounds, and areas of similar significance.'' NMFS' duty under this ''least practicable adverse impact'' standard is to prescribe mitigation reasonably designed to minimize, to the extent practicable, any adverse population-level impacts, as well as habitat impacts. While population-level impacts can be minimized by reducing impacts on individual marine mammals, not all takes translate to population-level impacts. NMFS' primary objective under the ''least practicable adverse impact'' standard is to design mitigation targeting those impacts on individual marine mammals that are most likely to lead to adverse population-level effects.

The NDAA of 2004 amended the MMPA as it relates to military-readiness activities and the ITA process such that ''least practicable adverse impact'' shall include consideration of personnel safety, practicality of implementation, and impact on the effectiveness of the ''military readiness activity.'' The training activities described in the Navy's application are considered military readiness activities.

NMFS reviewed the proposed activities and the suite of mitigation measures as described in the application to determine if they would result in the least practicable adverse effect on marine mammals, which includes a careful balancing of the likely benefit of any particular measure to the marine mammals with the likely effect of that measure on personnel safety, practicality of implementation, and impact on the effectiveness of the ''military-readiness activity.'' NMFS described the Navy's proposed mitigation measures in detail in the notice of the proposed IHA (80 FR 53658; September 4, 2015; pages 53674–53675), and they have not changed. NMFS worked with the Navy to develop

these proposed measures, and they are informed by years of experience and monitoring.

The Navy's proposed mitigation measures are modifications to the proposed activities that are implemented for the sole purpose of reducing a specific potential environmental impact on a particular resource. These do not include standard operating procedures, which are established for reasons other than environmental benefit. Most of the following mitigation measures are currently, or were previously, implemented as a result of past environmental compliance documents. The Navy's overall approach to assessing potential mitigation measures is based on two principles: (1) Mitigation measures will be effective at reducing potential impacts on the resource, and (2) from a military perspective, the mitigation measures are practicable, executable, and safety and readiness will not be impacted.

The mitigation measures applicable to the proposed Civilian Port Defense training activities are the same as those identified in the Mariana Islands Training and Testing Environmental Impact Statement/Overseas Environmental Impact Statement (MITT EIS/OEIS), Chapter 5. All mitigation measures which could be applicable to the proposed activities are provided below. For the mitigation measures described below, the Lookout Procedures and Mitigation Zone Procedure sections from the MITT EIS/OEIS have been combined. For details regarding the methodology for analyzing each measure, see the MITT EIS/OEIS, Chapter 5.

**Lookout Procedure Measures**

The Navy will have two types of lookouts for the purposes of conducting visual observations: (1) Those positioned on surface ships, and (2) those positioned in aircraft or on boats. Lookouts positioned on surface ships will be dedicated solely to diligent observation of the air and surface of the water. They will have multiple observation objectives, which include but are not limited to detecting the presence of biological resources and recreational or fishing boats, observing mitigation zones, and monitoring for vessel and personnel safety concerns. Lookouts positioned on surface ships will typically be personnel already standing watch or existing members of the bridge watch team who become temporarily relieved of job responsibilities that would divert their attention from observing the air or surface of the water (such as navigation of a vessel).

Due to aircraft and boat manning and space restrictions, Lookouts positioned in aircraft or on boats will consist of the aircraft crew, pilot, or boat crew. Lookouts positioned in aircraft and boats may necessarily be responsible for tasks in addition to observing the air or surface of the water (for example, navigation of a helicopter or rigid hull inflatable boat). However, aircraft and boat lookouts will, to the maximum extent practicable and consistent with aircraft and boat safety and training requirements, comply with the observation objectives described above for Lookouts positioned on surface ships.

**Mitigation Measures**

*High-Frequency Active Sonar*

The Navy will have one Lookout on ships or aircraft conducting high-frequency active sonar (HFAS) activities associated with mine warfare activities at sea.

Mitigation will include visual observation from a vessel or aircraft (with the exception of platforms operating at high altitudes) immediately before and during active transmission within a mitigation zone of 200 yards (yds. [183 m]) from the active sonar source. Active transmission will cease if a marine mammal is sighted within the mitigation zone. Active transmission will recommence if any one of the following conditions is met: (1) The animal is observed exiting the mitigation zone, (2) the animal is thought to have exited the mitigation zone based on a determination of its course and speed and the relative motion between the animal and the source, (3) the mitigation zone has been clear from any additional sightings for a period of 10 minutes for an aircraft-deployed source, (4) the mitigation zone has been clear from any additional sightings for a period of 30 minutes for a vessel-deployed source, (5) the vessel or aircraft has repositioned itself more than 400 yds (366 m) away from the location of the last sighting, or (6) the vessel concludes that dolphins are deliberately closing in to ride the vessel's bow wave (and there are no other marine mammal sightings within the mitigation zone).

*Physical Disturbance and Strike*

Although the Navy does not anticipate that any marine mammals would be struck during the conduct of Civilian Port Defense training activities, the mitigation measures below will be implemented and adhered to.

*Vessels*—While underway, vessels will have a minimum of one Lookout. Vessels will avoid approaching marine mammals head on and will maneuver to maintain a mitigation zone of 500 yds (457 m) around observed whales, and 200 yds (183 m) around all other marine mammals (except bow riding dolphins), providing it is safe to do so.

*Towed In-Water Devices*—The Navy will have one Lookout during activities using towed in-water devices when towed from a manned platform.

The Navy will ensure that towed in-water devices being towed from manned platforms avoid coming within a mitigation zone of 250 yds (229 m) around any observed marine mammal, providing it is safe to do so.

**Mitigation Conclusions**

NMFS has carefully evaluated the Navy's proposed mitigation measures—many of which were developed with NMFS' input during previous Navy Training and Testing authorizations—and considered a range of other measures in the context of ensuring that NMFS prescribes the means of effecting the least practicable adverse impact on the affected marine mammal species and stocks and their habitat. Our evaluation of potential measures included consideration of the following factors in relation to one another: The manner in which, and the degree to which, the successful implementation of the mitigation measures is expected to reduce the likelihood and/or magnitude of adverse impacts to marine mammal species and stocks and their habitat; the proven or likely efficacy of the measures; and the practicability of the suite of measures for applicant implementation, including consideration of personnel safety, practicality of implementation, and impact on the effectiveness of the military readiness activity.

Any mitigation measure(s) prescribed by NMFS should be able to accomplish, have a reasonable likelihood of accomplishing (based on current science), or contribute to accomplishing one or more of the general goals listed below:

a. Avoid or minimize injury or death of marine mammals wherever possible (goals b, c, and d may contribute to this goal).

b. Reduce the number of marine mammals (total number or number at biologically important time or location) exposed to received levels of mid-frequency active sonar/high-frequency active sonar (MFAS/HFAS), underwater detonations, or other activities expected to result in the take of marine mammals

(this goal may contribute to a, above, or to reducing harassment takes only).

c. Reduce the number of times (total number or number at biologically important time or location) individuals would be exposed to received levels of MFAS/HFAS, underwater detonations, or other activities expected to result in the take of marine mammals (this goal may contribute to a, above, or to reducing harassment takes only).

d. Reduce the intensity of exposures (either total number or number at biologically important time or location) to received levels of MFAS/HFAS, underwater detonations, or other activities expected to result in the take of marine mammals (this goal may contribute to a, above, or to reducing the severity of harassment takes only).

e. Avoid or minimize adverse effects to marine mammal habitat, paying special attention to the food base, activities that block or limit passage to or from biologically important areas, permanent destruction of habitat, or temporary destruction/disturbance of habitat during a biologically important time.

f. For monitoring directly related to mitigation—increase the probability of detecting marine mammals, thus allowing for more effective implementation of the mitigation (shut-down zone, etc.).

Based on our evaluation of the Navy's proposed measures, as well as other measures considered by NMFS, NMFS has determined that the Navy's proposed mitigation measures are adequate means of effecting the least practicable adverse impacts on marine mammals species or stocks and their habitat, paying particular attention to rookeries, mating grounds, and areas of similar significance, while also considering personnel safety, practicality of implementation, and impact on the effectiveness of the military readiness activity.

The proposed IHA comment period provided the public an opportunity to submit recommendations, views, and/or concerns regarding this action and the proposed mitigation measures. NMFS did not receive any public comments on the proposed mitigation measures.

**Monitoring and Reporting**

Section 101(a)(5)(A) and (D) of the MMPA states that in order to issue an ITA for an activity, NMFS must set forth ''requirements pertaining to the monitoring and reporting of such taking.'' The MMPA implementing regulations at 50 CFR 216.104(a)(13) indicate that requests for ITAs must include the suggested means of accomplishing the necessary monitoring and reporting that will result in increased knowledge of the species and of the level of taking or impacts on populations of marine mammals that are expected to be present. NMFS described the Navy's proposed Monitoring and Reporting in the notice of the proposed IHA (80 FR 53658; September 4, 2015; pages 53675–53677), and they have not changed.

*Integrated Comprehensive Monitoring Program*

The U.S. Navy has coordinated with NMFS to develop an overarching program plan in which specific monitoring would occur. This plan is called the Integrated Comprehensive Monitoring Program (ICMP) (U.S. Department of the Navy, 2011). The ICMP has been developed in direct response to Navy permitting requirements established in various MMPA Final Rules, Endangered Species Act consultations, Biological Opinions, and applicable regulations. As a framework document, the ICMP applies by regulation to those activities on ranges and operating areas for which the Navy is seeking or has sought incidental take authorizations. The ICMP is intended to coordinate monitoring efforts across all regions and to allocate the most appropriate level and type of effort based on set of standardized research goals, and in acknowledgement of regional scientific value and resource availability.

The ICMP is designed to be a flexible, scalable, and adjustable plan. The ICMP is evaluated annually through the adaptive management process to assess progress, provide a matrix of goals for the following year, and make recommendations for refinement. Future monitoring will address the following ICMP top-level goals through a series of regional and ocean basin study questions with a priority study and funding focus on species of interest as identified for each range complex.

- An increase in our understanding of the likely occurrence of marine mammals and/or ESA-listed marine species in the vicinity of the action (*i.e.,* presence, abundance, distribution, and/or density of species);
- An increase in our understanding of the nature, scope, or context of the likely exposure of marine mammals and/or ESA-listed species to any of the potential stressor(s) associated with the action (*e.g.,* tonal and impulsive sound), through better understanding of one or more of the following: (1) The action and the environment in which it occurs (*e.g.,* sound source characterization, propagation, and ambient noise levels); (2) the affected species (*e.g.,* life history or dive patterns); (3) the likely co-occurrence of marine mammals and/or ESA-listed marine species with the action (in whole or part) associated with specific adverse effects, and/or; (4) the likely biological or behavioral context of exposure to the stressor for the marine mammal and/or ESA-listed marine species (*e.g.,* age class of exposed animals or known pupping, calving or feeding areas);
- An increase in our understanding of how individual marine mammals or ESA-listed marine species respond (behaviorally or physiologically) to the specific stressors associated with the action (in specific contexts, where possible, *e.g.,* at what distance or received level);
- An increase in our understanding of how anticipated individual responses, to individual stressors or anticipated combinations of stressors, may impact either: (1) The long-term fitness and survival of an individual; or (2) the population, species, or stock (*e.g.,* through effects on annual rates of recruitment or survival);
- An increase in our understanding of the effectiveness of mitigation and monitoring measures;
- A better understanding and record of the manner in which the authorized entity complies with the ITA and Incidental Take Statement;
- An increase in the probability of detecting marine mammals (through improved technology or methods), both specifically within the safety zone (thus allowing for more effective implementation of the mitigation) and in general, to better achieve the above goals; and
- A reduction in the adverse impact of activities to the least practicable level, as defined in the MMPA.

The ICMP will also address relative investments to different range complexes based on goals across all range complexes, and monitoring will leverage multiple techniques for data acquisition and analysis whenever possible. Because the ICMP does not specify actual monitoring field work or projects in a given area, it allows the Navy to coordinate its monitoring to gather the best scientific data possible across all areas in which the Navy operates. The Navy continually improves the level of marine mammal scientific information in support of ongoing environmental documentation or permit compliance. Numerous Navy monitoring projects associated with the Southern California Range Complex are ongoing (details are available at *http://www.nmfs.noaa.gov/pr/pdfs/permits/hstt_monitoring.pdf* and *http://www.navymarinespecies*

*monitoring.us/*), and data from those region-specific-species-specific monitoring efforts will continue to inform our knowledge of marine mammals resources in Southern California. Details of the ICMP are available online (*http://www.navymarinespeciesmonitoring.us/*).

*Strategic Planning Process for Marine Species Monitoring*

The Navy also developed the Strategic Planning Process for Marine Species Monitoring, which establishes the guidelines and processes necessary to develop, evaluate, and fund individual projects based on objective scientific study questions. The process uses an underlying framework designed around top-level goals, a conceptual framework incorporating a progression of knowledge, and in consultation with a Scientific Advisory Group and other regional experts. The Strategic Planning Process for Marine Species Monitoring would be used to set intermediate scientific objectives, identify potential species of interest at a regional scale, and evaluate and select specific monitoring projects to fund or continue supporting for a given fiscal year. This process would also address relative investments to different range complexes based on goals across all range complexes, and monitoring would leverage multiple techniques for data acquisition and analysis whenever possible. The Strategic Planning Process for Marine Species Monitoring is also available online (*http://www.navymarinespeciesmonitoring.us/*).

*Reporting*

Effective reporting is critical both to compliance as well as ensuring that the most value is obtained from the required monitoring. Reports from individual monitoring events, results of analyses, publications, and periodic progress reports for specific monitoring projects would be posted to the Navy's Marine Species Monitoring Web portal: *http://www.navymarinespeciesmonitoring.us.*

General Notification of Injured or Dead Marine Mammals—If any injury or death of a marine mammal is observed during the Civilian Port Defense training activities, the Navy will immediately halt the activity and report the incident to NMFS following the standard monitoring and reporting measures consistent with the MITT EIS/OEIS and Hawaii-Southern California Training and Testing EIS/OEIS. The reporting measures include the following procedures:

Navy personnel shall ensure that NMFS (regional stranding coordinator) is notified immediately (or as soon as clearance procedures allow) if an injured or dead marine mammal is found during or shortly after, and in the vicinity of, any Navy training activity utilizing high-frequency active sonar. The Navy shall provide NMFS with species or description of the animal(s), the condition of the animal(s) (including carcass condition if the animal is dead), location, time of first discovery, observed behaviors (if alive), and photo or video (if available). The Navy shall consult the Stranding Response and Communication Plan to obtain more specific reporting requirements for specific circumstances.

Vessel Strike—Vessel strike during Navy Civilian Port Defense activities in the Study Area is not anticipated; however, in the event that a Navy vessel strikes a whale, the Navy shall do the following:

Immediately report to NMFS (pursuant to the established Communication Protocol) the:

- Species identification (if known);
- Location (latitude/longitude) of the animal (or location of the strike if the animal has disappeared);
- Whether the animal is alive or dead (or unknown); and
- The time of the strike.

As soon as feasible, the Navy shall report to or provide to NMFS, the:

- Size, length, and description (critical if species is not known) of animal;
- An estimate of the injury status (*e.g.,* dead, injured but alive, injured and moving, blood or tissue observed in the water, status unknown, disappeared, etc.);
- Description of the behavior of the whale during event, immediately after the strike, and following the strike (until the report is made or the animal is no longer sighted);
- Vessel class/type and operational status;
- Vessel length;
- Vessel speed and heading; and
- To the best extent possible, obtain a photo or video of the struck animal, if the animal is still in view.

Within 2 weeks of the strike, provide NMFS:

- A detailed description of the specific actions of the vessel in the 30-minute timeframe immediately preceding the strike, during the event, and immediately after the strike (*e.g.,* the speed and changes in speed, the direction and changes in direction, other maneuvers, sonar use, etc., if not classified);
- A narrative description of marine mammal sightings during the event and immediately after, and any information as to sightings prior to the strike, if available; and use established Navy shipboard procedures to make a camera available to attempt to capture photographs following a ship strike.

NMFS and the Navy will coordinate to determine the services the Navy may provide to assist NMFS with the investigation of the strike. The response and support activities to be provided by the Navy are dependent on resource availability, must be consistent with military security, and must be logistically feasible without compromising Navy personnel safety. Assistance requested and provided may vary based on distance of strike from shore, the nature of the vessel that hit the whale, available nearby Navy resources, operational and installation commitments, or other factors.

**Comments**

A notice of the proposed IHA and request for public comments was published in the **Federal Register** on September 4, 2015 (80 FR 53658; September 4, 2015). During the 30-day public comment period, NMFS only received one comment from the Marine Mammal Commission, who concurred with our preliminary determination and recommended that NMFS issue the IHA, subject to inclusion of the proposed mitigation, monitoring, and reporting measures.

**Estimated Take**

In the Potential Effects of the Specified Activity on Marine Mammals section of the notice of the proposed IHA (80 FR 53658; September 4, 2015; pages 53663–53672), NMFS' analysis identified the lethal responses, physical trauma, sensory impairment (PTS, TTS, and acoustic masking), physiological responses (particular stress responses), and behavioral responses that could potentially result from exposure to active sonar. In the Estimated Take by Incidental Harassment section of the notice of the proposed IHA, NMFS described the potential effects to marine mammals from active sonar in relation to the MMPA regulatory definitions of Level A and Level B harassment (80 FR 53658; September 4, 2015; pages 53677–53678). That information has not changed and is not repeated here.

As mentioned previously, behavioral responses are context-dependent, complex, and influenced to varying degrees by a number of factors other than just received level. For example, an animal may respond differently to a sound emanating from a ship that is moving towards the animal than it would to an identical received level

coming from a vessel that is moving away, or to a ship traveling at a different speed or at a different distance from the animal. At greater distances, though, the nature of vessel movements could also potentially not have any effect on the animal's response to the sound. In any case, a full description of the suite of factors that elicited a behavioral response would require a mention of the vicinity, speed and movement of the vessel, or other factors. So, while sound sources and the received levels are the primary focus of the analysis, it is with the understanding that other factors related to the training are sometimes contributing to the behavioral responses of marine mammals, although they cannot be quantified.

Criteria and thresholds used for determining the potential effects from the Civilian Port Defense activities are consistent with those used in the Navy's Phase II Training and Testing EISs (*e.g.,* HSTT, MITT). The Estimated Take by Incidental Harassment section of the notice of the proposed IHA (80 FR 53658; September 4, 2015; page 53678, see Table 3 for Injury [PTS] and disturbance [TTS, Behavioral] thresholds and weighting criteria) provides the criteria and thresholds used in the analysis for estimating quantitative acoustic exposures of marine mammals from the proposed training activities. Southall *et al.* (2007) proposed frequency-weighting to account for the frequency bandwidth of hearing in marine mammals. Frequency-weighting functions are used to adjust the received sound level based on the sensitivity of the animal to the frequency of the sound. Details regarding these criteria and thresholds can be found in Finneran and Jenkins (2012).

As discussed earlier, factors other than received level (such as distance from or bearing to the sound source, context of animal at time of exposure) can affect the way that marine mammals respond; however, data to support a quantitative analysis of those (and other factors) do not currently exist. It is also worth specifically noting that while context is very important in marine mammal response, given otherwise equivalent context, the severity of a marine mammal behavioral response is also expected to increase with received level (Houser and Moore, 2014). NMFS will continue to modify these criteria as new data become available and can be appropriately and effectively incorporated.

**Incidental Take Request**

The Navy's Final EA for 2015 West Coast Civilian Port Defense training activities analyzed the following stressors for potential impacts to marine mammals:

- Acoustic (sonar sources, vessel noise, aircraft noise)
- Energy (electromagnetic devices and lasers)
- Physical disturbance and strikes (vessels, in-water devices, seafloor objects)

NMFS and the Navy determined the only stressor that could potentially result in the incidental taking of marine mammals per the definition of MMPA harassment from the Civilian Port Defense activities within the Study Area is from acoustic transmissions related to high-frequency sonar.

The methods of incidental take associated with the acoustic transmissions from the proposed Civilian Port Defense are described within Chapter 2 of the application. Acoustic transmissions have the potential to temporarily disturb or displace marine mammals. Specifically, only underwater active transmissions may result in the ''take'' in the form of Level B harassment.

Level A harassment and mortality are not anticipated to result from any of the proposed Civilian Port Defense activities. Furthermore, Navy mitigation and monitoring measures will be implemented to further minimize the potential for Level B takes of marine mammals.

A detailed analysis of effects due to marine mammal exposures to non-impulsive sources (*i.e.,* active sonar) in the Study Area is presented in Chapter 6 of the application and in the Estimated Take by Incidental Harassment section of the notice of the proposed IHA (80 FR 53658; September 4, 2015; pages 53677–53680). Based on the quantitative acoustic modeling and analysis described in Chapter 6 of the application and in the Estimated Take by Incidental Harassment section of the notice of the proposed IHA, Table 1 summarizes the Navy's final take request for the 2015 Civilian Port Defense training activities.

TABLE 1—TOTAL NUMBER OF EXPOSURES MODELED AND REQUESTED PER SPECIES FOR CIVILIAN PORT DEFENSE TRAINING ACTIVITIES

| Common name | Level B takes requested | Percentage of stock taken (%) |
|---|---|---|
| Long-beaked common dolphin | 8 | 0.007 |
| Short-beaked common dolphin | 727 | 0.177 |
| Risso's dolphin | 21 | 0.330 |
| Pacific white-sided dolphin | 40 | 0.149 |
| Bottlenose dolphin coastal | 48 | 14.985 |
| Harbor seal | 8 | 0.026 |
| California sea lion | 46 | 0.015 |
| Total | 898 | |

**Analysis and Negligible Impact Determination**

Negligible impact is ''an impact resulting from the specified activity that cannot be reasonably expected to, and is not reasonably likely to, adversely affect the species or stock through effects on annual rates of recruitment or survival'' (50 CFR 216.103). A negligible impact finding is based on the lack of likely adverse effects on annual rates of recruitment or survival (*i.e.,* population-level effects). An estimate of the number of takes, alone, is not enough information on which to base an impact determination, as the severity of harassment may vary greatly depending on the context and duration of the behavioral response, many of which would not be expected to have deleterious impacts on the fitness of any individuals. In determining whether the expected takes will have a negligible impact, in addition to considering estimates of the number of marine mammals that might be ''taken'', NMFS must consider other factors, such as the likely nature of any responses (their intensity, duration, etc.), the context of any responses (critical reproductive time or location, migration, etc.), as well as the number and nature (*e.g.,* severity) of estimated Level A harassment takes, the number of estimated mortalities, and the status of the species.

To avoid repetition, we provide some general analysis immediately below that applies to all the species listed in Table 1, given that some of the anticipated effects (or lack thereof) of the Navy's training activities on marine mammals are expected to be relatively similar in nature. However, below that, we break our analysis into species or groups to provide more specific information

related to the anticipated effects on individuals or where there is information about the status or structure of any species that would lead to a differing assessment of the effects on the population.

*Behavioral Harassment*

As discussed previously in the notice of the proposed IHA, marine mammals can respond to MFAS/HFAS in many different ways, a subset of which qualifies as harassment (see Behavioral Harassment). One thing that the Level B harassment take estimates do not take into account is the fact that most marine mammals will likely avoid strong sound sources to one extent or another. Although an animal that avoids the sound source will likely still be taken in some instances (such as if the avoidance results in a missed opportunity to feed, interruption of reproductive behaviors, etc.), in other cases avoidance may result in fewer instances of take than were estimated or in the takes resulting from exposure to a lower received level than was estimated, which could result in a less severe response. An animal's exposure to a higher received level is more likely to result in a behavioral response that is more likely to adversely affect the health of the animal.

Specifically, given a range of behavioral responses that may be classified as Level B harassment, to the degree that higher received levels are expected to result in more severe behavioral responses, only a small percentage of the anticipated Level B harassment from Navy activities might necessarily be expected to potentially result in more severe responses, especially when the distance from the source at which the levels below are received is considered. Marine mammals are able to discern the distance of a given sound source, and given other equal factors (including received level), they have been reported to respond more to sounds that are closer (DeRuiter *et al.,* 2013). Further, the estimated number of responses do not reflect either the duration or context of those anticipated responses, some of which will be of very short duration, and other factors should be considered when predicting how the estimated takes may affect individual fitness.

Although the Navy has been monitoring the effects of MFAS/HFAS on marine mammals since 2006, and research on the effects of active sonar is advancing, our understanding of exactly how marine mammals in the Study Area will respond to active sonar is still growing. The Navy has submitted reports from more than 60 major exercises across Navy range complexes that indicate no behavioral disturbance was observed. One cannot conclude from these results that marine mammals were not harassed from MFAS/HFAS, as a portion of animals within the area of concern were not seen, the full series of behaviors that would more accurately show an important change is not typically seen (*i.e.,* only the surface behaviors are observed), and some of the non-biologist watchstanders might not be well-qualified to characterize behaviors. However, one can say that the animals that were observed did not respond in any of the obviously more severe ways, such as panic, aggression, or anti-predator response.

*Diel Cycle*

As noted previously, many animals perform vital functions, such as feeding, resting, traveling, and socializing on a diel cycle (24-hour cycle). Behavioral reactions to noise exposure (when taking place in a biologically important context, such as disruption of critical life functions, displacement, or avoidance of important habitat) are more likely to be significant if they last more than one diel cycle or recur on subsequent days (Southall *et al.,* 2007). Consequently, a behavioral response lasting less than one day and not recurring on subsequent days is not considered severe unless it could directly affect reproduction or survival (Southall *et al.,* 2007). Note that there is a difference between multiple-day substantive behavioral reactions and multiple-day anthropogenic activities. For example, just because at-sea exercises last for multiple days does not necessarily mean that individual animals are either exposed to those exercises for multiple days or, further, exposed in a manner resulting in a sustained multiple day substantive behavioral response. Additionally, the Navy does not necessarily operate active sonar the entire time during an exercise. While it is certainly possible that these sorts of exercises could overlap with individual marine mammals multiple days in a row at levels above those anticipated to result in a take, because of the factors mentioned above, it is considered not to be likely for the majority of takes, does not mean that a behavioral response is necessarily sustained for multiple days, and still necessitates the consideration of likely duration and context to assess any effects on the individual's fitness.

*TTS*

As mentioned previously, TTS can last from a few minutes to days, be of varying degree, and occur across various frequency bandwidths, all of which determine the severity of the impacts on the affected individual, which can range from minor to more severe. The TTS sustained by an animal is primarily classified by three characteristics:

1. Frequency—Available data (of mid-frequency hearing specialists exposed to mid- or high-frequency sounds; Southall *et al.,* 2007) suggest that most TTS occurs in the frequency range of the source up to one octave higher than the source (with the maximum TTS at ½ octave above). The more powerful MF sources used have center frequencies between 3.5 and 8 kHz and the other unidentified MF sources are, by definition, less than 10 kHz, which suggests that TTS induced by any of these MF sources would be in a frequency band somewhere between approximately 2 and 20 kHz. There are fewer hours of HF source use and the sounds would attenuate more quickly, plus they have lower source levels, but if an animal were to incur TTS from these sources, it would cover a higher frequency range (sources are between 20 and 100 kHz, which means that TTS could range up to 200 kHz; however, HF systems are typically used less frequently and for shorter time periods than surface ship and aircraft MF systems, so TTS from these sources is even less likely).

2. Degree of the shift (*i.e.,* by how many dB the sensitivity of the hearing is reduced)—Generally, both the degree of TTS and the duration of TTS will be greater if the marine mammal is exposed to a higher level of energy (which would occur when the peak dB level is higher or the duration is longer). The threshold for the onset of TTS was discussed previously in this document. An animal would have to approach closer to the source or remain in the vicinity of the sound source appreciably longer to increase the received SEL, which would be difficult considering the Lookouts and the nominal speed of an active sonar vessel (10–15 knots). In the TTS studies, some using exposures of almost an hour in duration or up to 217 SEL, most of the TTS induced was 15 dB or less, though Finneran *et al.* (2007) induced 43 dB of TTS with a 64-second exposure to a 20 kHz source. However, MFAS/HFAS emits a nominal ping every 50 seconds, and incurring those levels of TTS is highly unlikely.

3. Duration of TTS (recovery time)—In the TTS laboratory studies, some using exposures of almost an hour in duration or up to 217 SEL, almost all individuals recovered within 1 day (or less, often in minutes), although in one study (Finneran *et al.,* 2007), recovery took 4 days.

Based on the range of degree and duration of TTS reportedly induced by exposures to non-pulse sounds of energy higher than that to which free-swimming marine mammals in the field are likely to be exposed during MFAS/HFAS training exercises in the Study Area, it is unlikely that marine mammals would ever sustain a TTS from active sonar that alters their sensitivity by more than 20 dB for more than a few days (and any incident of TTS would likely be far less severe due to the short duration of the majority of the exercises and the speed of a typical vessel). Also, for the same reasons discussed in the Diel Cycle section, and because of the short distance within which animals would need to approach the sound source, it is unlikely that animals would be exposed to the levels necessary to induce TTS in subsequent time periods such that their recovery is impeded. Additionally, though the frequency range of TTS that marine mammals might sustain would overlap with some of the frequency ranges of their vocalization types, the frequency range of TTS from MFAS/HFAS (the source from which TTS would most likely be sustained because the higher source level and slower attenuation make it more likely that an animal would be exposed to a higher received level) would not usually span the entire frequency range of one vocalization type, much less span all types of vocalizations or other critical auditory cues. If impaired, marine mammals would typically be aware of their impairment and are sometimes able to implement behaviors to compensate (see Acoustic Masking or Communication Impairment section), though these compensations may incur energetic costs.

*Acoustic Masking or Communication Impairment*

Masking only occurs during the time of the signal (and potential secondary arrivals of indirect rays), versus TTS, which continues beyond the duration of the signal. Standard MFAS/HFAS nominally pings every 50 seconds for hull-mounted sources. For the sources for which we know the pulse length, most are significantly shorter than hull-mounted active sonar, on the order of several microseconds to tens of microseconds. For hull-mounted active sonar, though some of the vocalizations that marine mammals make are less than one second long, there is only a 1 in 50 chance that they would occur exactly when the ping was received, and when vocalizations are longer than one second, only parts of them are masked. Alternately, when the pulses are only several microseconds long, the majority of most animals' vocalizations would not be masked. Masking effects from MFAS/HFAS are expected to be minimal. If masking or communication impairment were to occur briefly, it would be in the frequency range of MFAS/HFAS, which overlaps with some marine mammal vocalizations; however, it would likely not mask the entirety of any particular vocalization, communication series, or other critical auditory cue, because the signal length, frequency, and duty cycle of the MFAS/HFAS signal does not perfectly mimic the characteristics of any marine mammal's vocalizations.

*Species and Group-Specific Analysis*

*Long-Beaked Common Dolphin*—Long-beaked common dolphins that may be found in the Study Area belong to the California stock (Carretta *et al.,* 2014). The Navy's acoustic analysis (quantitative modeling) predicts that 8 instances of Level B harassment of long-beaked common dolphin may occur from active sonar in the Study Area during Civilian Port Defense training activities. These Level B takes are anticipated to be in the form of behavioral reactions (3) and TTS (5) and no injurious takes of long-beaked common dolphin are requested or proposed for authorization. Relative to population size, these activities are anticipated to result only in a limited number of level B harassment takes. When the numbers of behavioral takes are compared to the estimated stock abundance (stock abundance estimates are shown in Table 1 of the notice of the proposed IHA) and if one assumes that each take happens to a separate animal, less than 0.01 percent of the California stock of long-beaked common dolphin would be behaviorally harassed during proposed training activities.

Behavioral reactions of marine mammals to sound are known to occur but are difficult to predict. Recent behavioral studies indicate that reactions to sounds, if any, are highly contextual and vary between species and individuals within a species (Moretti *et al.,* 2010; Southall *et al.,* 2011; Thompson *et al.,* 2010; Tyack, 2009; Tyack *et al.,* 2011). Behavioral responses can range from alerting, to changing their behavior or vocalizations, to avoiding the sound source by swimming away or diving (Richardson, 1995; Nowacek, 2007; Southall *et al.,* 2007; Finneran and Jenkins, 2012). Long-beaked common dolphins generally travel in large pods and should be visible from a distance in order to implement mitigation measures and reduce potential impacts. Many of the recorded long-beaked common dolphin vocalizations overlap with the MFAS/HFAS TTS frequency range (2–20 kHz) (Moore and Ridgway, 1995; Ketten, 1998); however, NMFS does not anticipate TTS of a serious degree or extended duration to occur as a result of exposure to MFAS/HFAS. Recovery from a threshold shift (TTS) can take a few minutes to a few days, depending on the exposure duration, sound exposure level, and the magnitude of the initial shift, with larger threshold shifts and longer exposure durations requiring longer recovery times (Finneran *et al.,* 2005; Mooney *et al.,* 2009a; Mooney *et al.,* 2009b; Finneran and Schlundt, 2010). Large threshold shifts are not anticipated for these activities because of the unlikelihood that animals will remain within the ensonified area at high levels for the duration necessary to induce larger threshold shifts. Threshold shifts do not necessarily affect all hearing frequencies equally, so some threshold shifts may not interfere with an animal's hearing of biologically relevant sounds.

Overall, the number of predicted behavioral reactions is low and temporary behavioral reactions in long-beaked common dolphins are unlikely to cause long-term consequences for individual animals or the population. The Civilian Port Defense activities are not expected to occur in an area/time of specific importance for reproductive, feeding, or other known critical behaviors for long-beaked common dolphin. No evidence suggests any major reproductive differences in comparison to short-beaked common dolphins (Reeves *et al.,* 2002). Short-beaked common dolphin gestation is approximately 11 to 11.5 months in duration (Danil, 2004; Murphy and Rogan, 2006) with most calves born from May to September (Murphy and Rogan, 2006). Therefore, calving would not occur during the Civilian Port Defense training timeframe. The California stock of long-beaked common dolphin is not depleted under the MMPA. Although there is no formal statistical trend analysis, over the last 30 years sighting and stranding data shows an increasing trend of long-beaked common dolphins in California waters (Carretta *et al.,* 2014). Consequently, the activities are not expected to adversely impact annual rates of recruitment or survival of long-beaked common dolphin.

*Short-Beaked Common Dolphin*—Short-beaked common dolphins that may be found in the Study Area belong to the California/Washington/Oregon stock (Carretta *et al.,* 2014). The Navy's acoustic analysis (quantitative

modeling) predicts that 727 instances of Level B harassment of short-beaked common dolphin may occur from active sonar in the Study Area during Civilian Port Defense training activities. These Level B takes are anticipated to be in the form of behavioral reactions (422) and TTS (305) and no injurious takes of short-beaked common dolphin are requested or proposed for authorization. Relative to population size, these activities are anticipated to result only in a limited number of level B harassment takes. When the numbers of behavioral takes are compared to the estimated stock abundance (stock abundance estimates are shown in Table 1 of the notice of the proposed IHA) and if one assumes that each take happens to a separate animal, less than 0.18 percent of the California/Washington/Oregon stock of short-beaked common dolphin would be behaviorally harassed during proposed training activities.

Behavioral reactions of marine mammals to sound are known to occur but are difficult to predict. Recent behavioral studies indicate that reactions to sounds, if any, are highly contextual and vary between species and individuals within a species (Moretti *et al.,* 2010; Southall *et al.,* 2011; Thompson *et al.,* 2010; Tyack, 2009; Tyack *et al.,* 2011). Behavioral responses can range from alerting, to changing their behavior or vocalizations, to avoiding the sound source by swimming away or diving (Richardson, 1995; Nowacek, 2007; Southall *et al.,* 2007; Finneran and Jenkins, 2012). Short-beaked common dolphins generally travel in large pods and should be visible from a distance in order to implement mitigation measures and reduce potential impacts. Many of the recorded short-beaked common dolphin vocalizations overlap with the MFAS/HFAS TTS frequency range (2–20 kHz) (Moore and Ridgway, 1995; Ketten, 1998); however, NMFS does not anticipate TTS of a serious degree or extended duration to occur as a result of exposure to MFAS/HFAS. Recovery from a threshold shift (TTS) can take a few minutes to a few days, depending on the exposure duration, sound exposure level, and the magnitude of the initial shift, with larger threshold shifts and longer exposure durations requiring longer recovery times (Finneran *et al.,* 2005; Mooney *et al.,* 2009a; Mooney *et al.,* 2009b; Finneran and Schlundt, 2010). Large threshold shifts are not anticipated for these activities because of the unlikelihood that animals will remain within the ensonified area at high levels for the duration necessary to induce larger threshold shifts. Threshold shifts do not necessarily affect all hearing frequencies equally, so some threshold shifts may not interfere with an animal's hearing of biologically relevant sounds.

Overall, the number of predicted behavioral reactions is low and temporary behavioral reactions in short-beaked common dolphins are unlikely to cause long-term consequences for individual animals or the population. The Civilian Port Defense activities are not expected to occur in an area/time of specific importance for reproductive, feeding, or other known critical behaviors for long-beaked common dolphin. Short-beaked common dolphin gestation is approximately 11 to 11.5 months in duration (Danil, 2004; Murphy and Rogan, 2006) with most calves born from May to September (Murphy and Rogan, 2006). Therefore, calving would not occur during the Civilian Port Defense training timeframe. The California/Washington/Oregon stock of short-beaked common dolphin is not depleted under the MMPA. Abundance off California has increased dramatically since the late 1970s, along with a smaller decrease in abundance in the eastern tropical Pacific, suggesting a large-scale northward shift in the distribution of this species in the eastern north Pacific (Forney and Barlow, 1998; Forney *et al.,* 1995). Consequently, the activities are not expected to adversely impact annual rates of recruitment or survival of short-beaked common dolphin.

*Risso's Dolphin*—Risso's dolphins that may be found in the Study Area belong to the California/Washington/Oregon stock (Carretta *et al.,* 2014). The Navy's acoustic analysis (quantitative modeling) predicts that 21 instances of Level B harassment of Risso's dolphin may occur from active sonar in the Study Area during Civilian Port Defense training activities. These Level B takes are anticipated to be in the form of behavioral reactions (16) and TTS (5) and no injurious takes of Risso's dolphin are requested or proposed for authorization. Relative to population size, these activities are anticipated to result only in a limited number of level B harassment takes. When the numbers of behavioral takes are compared to the estimated stock abundance (stock abundance estimates are shown in Table 1 of the notice of the proposed IHA) and if one assumes that each take happens to a separate animal, approximately 0.33 percent of the California/Washington/Oregon stock of Risso's dolphin would be behaviorally harassed during proposed training activities.

Behavioral reactions of marine mammals to sound are known to occur but are difficult to predict. Recent behavioral studies indicate that reactions to sounds, if any, are highly contextual and vary between species and individuals within a species (Moretti *et al.,* 2010; Southall *et al.,* 2011; Thompson *et al.,* 2010; Tyack, 2009; Tyack *et al.,* 2011). Behavioral responses can range from alerting, to changing their behavior or vocalizations, to avoiding the sound source by swimming away or diving (Richardson, 1995; Nowacek, 2007; Southall *et al.,* 2007; Finneran and Jenkins, 2012). Risso's dolphins generally travel in large pods and should be visible from a distance in order to implement mitigation measures and reduce potential impacts. Many of the recorded Risso's dolphin vocalizations overlap with the MFAS/HFAS TTS frequency range (2–20 kHz) (Corkeron and Van Parijs 2001); however, NMFS does not anticipate TTS of a serious degree or extended duration to occur as a result of exposure to MFAS/HFAS. Recovery from a threshold shift (TTS) can take a few minutes to a few days, depending on the exposure duration, sound exposure level, and the magnitude of the initial shift, with larger threshold shifts and longer exposure durations requiring longer recovery times (Finneran *et al.,* 2005; Mooney *et al.,* 2009a; Mooney *et al.,* 2009b; Finneran and Schlundt, 2010). Large threshold shifts are not anticipated for these activities because of the unlikelihood that animals will remain within the ensonified area at high levels for the duration necessary to induce larger threshold shifts. Threshold shifts do not necessarily affect all hearing frequencies equally, so some threshold shifts may not interfere with an animal's hearing of biologically relevant sounds.

Overall, the number of predicted behavioral reactions is low and temporary behavioral reactions in Risso's dolphins are unlikely to cause long-term consequences for individual animals or the population. The Civilian Port Defense activities are not expected to occur in an area/time of specific importance for reproductive, feeding, or other known critical behaviors for Risso's dolphin. The California/Washington/Oregon stock of Risso's dolphin is not depleted under the MMPA. The distribution of Risso's dolphins throughout the region is highly variable, apparently in response to oceanographic changes (Forney and Barlow, 1998). The status of Risso's dolphins off California, Oregon and Washington relative to optimum sustainable population is not known,

and there are insufficient data to evaluate potential trends in abundance. However, Civilian Port Defense training activities are not expected to adversely impact annual rates of recruitment or survival of Risso's dolphin for the reasons stated above.

*Pacific White-Sided Dolphin*—Pacific white-sided dolphins that may be found in the Study Area belong to the California/Washington/Oregon stock (Carretta *et al.,* 2014). The Navy's acoustic analysis (quantitative modeling) predicts that 40 instances of Level B harassment of Pacific white-sided dolphin may occur from active sonar in the Study Area during Civilian Port Defense training activities. These Level B takes are anticipated to be in the form of behavioral reactions (21) and TTS (19) and no injurious takes of Pacific white-sided dolphin are requested or proposed for authorization. Relative to population size, these activities are anticipated to result only in a limited number of level B harassment takes. When the numbers of behavioral takes are compared to the estimated stock abundance (stock abundance estimates are shown in Table 1 of the notice of the proposed IHA) and if one assumes that each take happens to a separate animal, less than 0.15 percent of the California/Washington/Oregon stock of Pacific white-sided dolphin would be behaviorally harassed during proposed training activities.

Behavioral reactions of marine mammals to sound are known to occur but are difficult to predict. Recent behavioral studies indicate that reactions to sounds, if any, are highly contextual and vary between species and individuals within a species (Moretti *et al.,* 2010; Southall *et al.,* 2011; Thompson *et al.,* 2010; Tyack, 2009; Tyack *et al.,* 2011). Behavioral responses can range from alerting, to changing their behavior or vocalizations, to avoiding the sound source by swimming away or diving (Richardson, 1995; Nowacek, 2007; Southall *et al.,* 2007; Finneran and Jenkins, 2012). Pacific white-sided dolphins generally travel in large pods and should be visible from a distance in order to implement mitigation measures and reduce potential impacts. Many of the recorded Pacific white-sided dolphin vocalizations overlap with the MFAS/HFAS TTS frequency range (2–20 kHz); however, NMFS does not anticipate TTS of a serious degree or extended duration to occur as a result of exposure to MFAS/HFAS. Recovery from a threshold shift (TTS) can take a few minutes to a few days, depending on the exposure duration, sound exposure level, and the magnitude of the initial shift, with larger threshold shifts and longer exposure durations requiring longer recovery times (Finneran *et al.,* 2005; Mooney *et al.,* 2009a; Mooney *et al.,* 2009b; Finneran and Schlundt, 2010). Large threshold shifts are not anticipated for these activities because of the unlikelihood that animals will remain within the ensonified area at high levels for the duration necessary to induce larger threshold shifts. Threshold shifts do not necessarily affect all hearing frequencies equally, so some threshold shifts may not interfere with an animal's hearing of biologically relevant sounds.

Overall, the number of predicted behavioral reactions is low and temporary behavioral reactions in Pacific white-sided dolphins are unlikely to cause long-term consequences for individual animals or the population. The Civilian Port Defense activities are not expected to occur in an area/time of specific importance for reproductive, feeding, or other known critical behaviors for long-beaked common dolphin. Pacific white-sided dolphin calves are typically born in the summer months between April and early September (Black, 1994; NOAA, 2012; Reidenberg and Laitman, 2002). This species is predominantly located around the proposed Study Area in the colder winter months when neither mating nor calving is expected, as both occur off the coast of Oregon and Washington outside of the timeframe for the proposed activities. The California/Washington/Oregon stock of Pacific white-sided dolphin is not depleted under the MMPA. The stock is considered stable, with no indications of any positive or negative trends in abundance (NOAA, 2014). Consequently, the activities are not expected to adversely impact annual rates of recruitment or survival of Pacific white-sided dolphin.

*Bottlenose Dolphin*—Bottlenose dolphins that may be found in the Study Area belong to the California Coastal stock (Carretta *et al.,* 2014). The Navy's acoustic analysis (quantitative modeling) predicts that 48 instances of Level B harassment of bottlenose dolphin may occur from active sonar in the Study Area during Civilian Port Defense training activities. These Level B takes are anticipated to be in the form of behavioral reactions (29) and TTS (19) and no injurious takes of bottlenose dolphin are requested or proposed for authorization. Relative to population size, these activities are anticipated to result only in a limited number of level B harassment takes. When the numbers of behavioral takes are compared to the estimated stock abundance (stock abundance estimates are shown in Table 1 of the notice of the proposed IHA) and if one assumes that each take happens to a separate animal, less than 15 percent of the Coastal stock of bottlenose dolphin would be behaviorally harassed during proposed training activities.

Behavioral reactions of marine mammals to sound are known to occur but are difficult to predict. Recent behavioral studies indicate that reactions to sounds, if any, are highly contextual and vary between species and individuals within a species (Moretti *et al.,* 2010; Southall *et al.,* 2011; Thompson *et al.,* 2010; Tyack, 2009; Tyack *et al.,* 2011). Behavioral responses can range from alerting, to changing their behavior or vocalizations, to avoiding the sound source by swimming away or diving (Richardson, 1995; Nowacek, 2007; Southall *et al.,* 2007; Finneran and Jenkins, 2012). Bottlenose dolphins generally travel in large pods and should be visible from a distance in order to implement mitigation measures and reduce potential impacts. Many of the recorded bottlenose dolphin vocalizations overlap with the MFAS/HFAS TTS frequency range (2–20 kHz); however, NMFS does not anticipate TTS of a serious degree or extended duration to occur as a result of exposure to MFAS/HFAS. Recovery from a threshold shift (TTS) can take a few minutes to a few days, depending on the exposure duration, sound exposure level, and the magnitude of the initial shift, with larger threshold shifts and longer exposure durations requiring longer recovery times (Finneran *et al.,* 2005; Mooney *et al.,* 2009a; Mooney *et al.,* 2009b; Finneran and Schlundt, 2010). Large threshold shifts are not anticipated for these activities because of the unlikelihood that animals will remain within the ensonified area at high levels for the duration necessary to induce larger threshold shifts. Threshold shifts do not necessarily affect all hearing frequencies equally, so some threshold shifts may not interfere with an animal's hearing of biologically relevant sounds.

Overall, the number of predicted behavioral reactions is low and temporary behavioral reactions in bottlenose dolphins are unlikely to cause long-term consequences for individual animals or the population. The Civilian Port Defense activities are not expected to occur in an area/time of specific importance for reproductive, feeding, or other known critical behaviors for bottlenose dolphin. The California/Washington/Oregon stock of bottlenose dolphin is not depleted

under the MMPA. In a comparison of abundance estimates from 1987–89 (n = 354), 1996–98 (n = 356), and 2004–05 (n = 323), Dudzik *et al.* (2006) found that the population size has remained stable over this period of approximately 20 years. Consequently, the activities are not expected to adversely impact annual rates of recruitment or survival of bottlenose dolphin.

*Harbor Seal*—Harbor seals that may be found in the Study Area belong to the California stock (Carretta *et al.,* 2014). Harbor seals have not been observed on the mainland coast of Los Angeles, Orange, and northern San Diego Counties (Henkel and Harvey, 2008; Lowry *et al.,* 2008). Thus, no harbor seal haul-outs are located within the proposed Study Area. The Navy's acoustic analysis (quantitative modeling) predicts that 8 instances of Level B harassment of harbor seal may occur from active sonar in the Study Area during Civilian Port Defense training activities. These Level B takes are anticipated to be in the form of non-TTS behavioral reactions only and no injurious takes of harbor seal are requested or proposed for authorization. Relative to population size, these activities are anticipated to result only in a limited number of level B harassment takes. When the numbers of behavioral takes are compared to the estimated stock abundance (stock abundance estimates are shown in Table 1 of the notice of the proposed IHA) and if one assumes that each take happens to a separate animal, less than 0.03 percent of the California stock of harbor seal would be behaviorally harassed during proposed training activities.

Research and observations show that pinnipeds in the water may be tolerant of anthropogenic noise and activity (a review of behavioral reactions by pinnipeds to impulsive and non-impulsive noise can be found in Richardson *et al.,* 1995 and Southall *et al.,* 2007). Available data, though limited, suggest that exposures between approximately 90 and 140 dB SPL do not appear to induce strong behavioral responses in pinnipeds exposed to nonpulse sounds in water (Jacobs and Terhune, 2002; Costa *et al.,* 2003; Kastelein *et al.,* 2006c). Based on the limited data on pinnipeds in the water exposed to multiple pulses (small explosives, impact pile driving, and seismic sources), exposures in the approximately 150 to 180 dB SPL range generally have limited potential to induce avoidance behavior in pinnipeds (Harris *et al.,* 2001; Blackwell *et al.,* 2004; Miller *et al.,* 2004). If pinnipeds are exposed to sonar or other active acoustic sources they may react in a number of ways depending on their experience with the sound source and what activity they are engaged in at the time of the acoustic exposure. Pinnipeds may not react at all until the sound source is approaching within a few hundred meters and then may alert, ignore the stimulus, change their behaviors, or avoid the immediate area by swimming away or diving. Effects on pinnipeds in the Study Area that are taken by Level B harassment, on the basis of reports in the literature as well as Navy monitoring from past activities, will likely be limited to reactions such as increased swimming speeds, increased surfacing time, or decreased foraging (if such activity were occurring). Most likely, individuals will simply move away from the sound source and be temporarily displaced from those areas, or not respond at all. In areas of repeated and frequent acoustic disturbance, some animals may habituate or learn to tolerate the new baseline or fluctuations in noise level. Habituation can occur when an animal's response to a stimulus wanes with repeated exposure, usually in the absence of unpleasant associated events (Wartzok *et al.,* 2003). While some animals may not return to an area, or may begin using an area differently due to training activities, most animals are expected to return to their usual locations and behavior. Given their documented tolerance of anthropogenic sound (Richardson *et al.,* 1995 and Southall *et al.,* 2007), repeated exposures of harbor seals to levels of sound that may cause Level B harassment are unlikely to result in hearing impairment or to significantly disrupt foraging behavior.

Overall, the number of predicted behavioral reactions is low and temporary behavioral reactions in harbor seals are unlikely to cause long-term consequences for individual animals or the population. The Civilian Port Defense activities are not expected to occur in an area/time of specific importance for reproductive, feeding, or other known critical behaviors for harbor seal. In California, harbor seals breed from March to May and pupping occurs between April and May (Alden *et al.,* 2002; Reeves *et al.,* 2002), neither of which occur within the timeframe of the proposed activities. The California stock of harbor seal is not depleted under the MMPA. Counts of harbor seals in California increased from 1981 to 2004, although a review of harbor seal dynamics through 1991 concluded that their status could not be determined with certainty (Hanan, 1996). The population appears to be stabilizing at what may be its carrying capacity. Consequently, the activities are not expected to adversely impact annual rates of recruitment or survival of harbor seal.

*California Sea Lion*—California sea lions that may be found in the Study Area belong to the U.S. stock (Carretta *et al.,* 2014). The Navy's acoustic analysis (quantitative modeling) predicts that 46 instances of Level B harassment of California sea lion may occur from active sonar in the Study Area during Civilian Port Defense training activities. These Level B takes are anticipated to be in the form of non-TTS behavioral reactions only and no injurious takes of California sea lions are requested or proposed for authorization. Relative to population size, these activities are anticipated to result only in a limited number of level B harassment takes. When the numbers of behavioral takes are compared to the estimated stock abundance (stock abundance estimates are shown in Table 1 of the notice of the proposed IHA) and if one assumes that each take happens to a separate animal, less than 0.02 percent of the U.S. stock of California sea lions would be behaviorally harassed during proposed training activities.

Research and observations show that pinnipeds in the water may be tolerant of anthropogenic noise and activity (a review of behavioral reactions by pinnipeds to impulsive and non-impulsive noise can be found in Richardson *et al.,* 1995 and Southall *et al.,* 2007). Available data, though limited, suggest that exposures between approximately 90 and 140 dB SPL do not appear to induce strong behavioral responses in pinnipeds exposed to nonpulse sounds in water (Jacobs and Terhune, 2002; Costa *et al.,* 2003; Kastelein *et al.,* 2006c). Based on the limited data on pinnipeds in the water exposed to multiple pulses (small explosives, impact pile driving, and seismic sources), exposures in the approximately 150 to 180 dB SPL range generally have limited potential to induce avoidance behavior in pinnipeds (Harris *et al.,* 2001; Blackwell *et al.,* 2004; Miller *et al.,* 2004). If pinnipeds are exposed to sonar or other active acoustic sources they may react in a number of ways depending on their experience with the sound source and what activity they are engaged in at the time of the acoustic exposure. Pinnipeds may not react at all until the sound source is approaching within a few hundred meters and then may alert, ignore the stimulus, change their behaviors, or avoid the immediate area by swimming away or diving. Effects on

pinnipeds in the Study Area that are taken by Level B harassment, on the basis of reports in the literature as well as Navy monitoring from past activities will likely be limited to reactions such as increased swimming speeds, increased surfacing time, or decreased foraging (if such activity were occurring). Most likely, individuals will simply move away from the sound source and be temporarily displaced from those areas, or not respond at all. In areas of repeated and frequent acoustic disturbance, some animals may habituate or learn to tolerate the new baseline or fluctuations in noise level. Habituation can occur when an animal's response to a stimulus wanes with repeated exposure, usually in the absence of unpleasant associated events (Wartzok *et al.,* 2003). While some animals may not return to an area, or may begin using an area differently due to training activities, most animals are expected to return to their usual locations and behavior. Given their documented tolerance of anthropogenic sound (Richardson *et al.,* 1995 and Southall *et al.,* 2007), repeated exposures of individuals to levels of sound that may cause Level B harassment are unlikely to result in hearing impairment or to significantly disrupt foraging behavior.

Overall, the number of predicted behavioral reactions is low and temporary behavioral reactions in California sea lions are unlikely to cause long-term consequences for individual animals or the population. The Civilian Port Defense activities are not expected to occur in an area/time of specific importance for reproductive, feeding, or other known critical behaviors for California sea lions. It is likely that male California sea lions will be primarily outside of the Study Area during the timeframe of the proposed activities, but females may be present. Typically during the summer, California sea lions congregate near rookery islands and specific open-water areas. The primary rookeries off the coast of California are on San Nicolas, San Miguel, Santa Barbara, and San Clemente Islands (Boeuf and Bonnell, 1980; Carretta *et al.,* 2000; Lowry *et al.,* 1992; Lowry and Forney, 2005). In May or June, female sea lions give birth, either on land or in water. Adult males establish breeding territories, both on land and in water, from May to July. In addition to the rookery sites, Santa Catalina Island is a major haul-out site within the Southern California Bight (Boeuf, 2002). Thus, breeding and pupping take place outside of the timeframe and location of the proposed training activities. The U.S. stock of California sea lions is not depleted under the MMPA. A regression of the natural logarithm of the pup counts against year indicates that the counts of pups increased at an annual rate of 5.4 percent between 1975 and 2008 (when pup counts for El Niño years were removed from the 1975–2005 time series). These records of pup counts from 1975 to 2008 were compiled from Lowry and Maravilla-Chavez (2005) and unpublished NMFS data. Consequently, the activities are not expected to adversely impact annual rates of recruitment or survival of California sea lion.

*Final Determination*

Overall, the conclusions and predicted exposures in this analysis find that overall impacts on marine mammal species and stocks would be negligible for the following reasons:

- All estimated acoustic harassments for the proposed Civilian Port Defense training activities are within the non-injurious temporary threshold shift (TTS) or behavioral effects zones (Level B harassment), and these harassments (take numbers) represent only a small percentage (less than 15 percent of bottlenose dolphin coastal stock; less than 0.5 percent for all other species) of the respective stock abundance for each species taken.
- Marine mammal densities inputted into the acoustic effects model are overly conservative, particularly when considering species where data is limited in portions of the proposed Study Area and seasonal migrations extend throughout the Study Area.
- The protective measures described in Mitigation are designed to reduce sound exposure on marine mammals to levels below those that may cause physiological effects (injury).
- Animals exposed to acoustics from this two-week event are habituated to a bustling industrial port environment.

This final IHA assumes that short-term non-injurious SELs predicted to cause onset-TTS or predicted SPLs predicted to cause temporary behavioral disruptions (non-TTS) qualify as Level B harassment. This approach predominately overestimates disturbances from acoustic transmissions as qualifying as harassment under MMPA's definition for military readiness activities because there is no established scientific correlation between short term sonar use and long term abandonment or significant alteration of behavioral patterns in marine mammals.

Consideration of negligible impact is required for NMFS to authorize incidental take of marine mammals. By definition, an activity has a ''negligible impact'' on a species or stock when it is determined that the total taking is not likely to reduce annual rates of adult survival or recruitment (*i.e.,* offspring survival, birth rates).

Behavioral reactions of marine mammals to sound are known to occur but are difficult to predict. Recent behavioral studies indicate that reactions to sounds, if any, are highly contextual and vary between species and individuals within a species (Moretti *et al.,* 2010; Southall *et al.,* 2011; Thompson *et al.,* 2010; Tyack, 2009; Tyack *et al.,* 2011). Depending on the context, marine mammals often change their activity when exposed to disruptive levels of sound. When sound becomes potentially disruptive, cetaceans at rest become active, feeding or socializing cetaceans or pinnipeds often interrupt these events by diving or swimming away. If the sound disturbance occurs around a haul out site, pinnipeds may move back and forth between water and land or eventually abandon the haul out. When attempting to understand behavioral disruption by anthropogenic sound, a key question to ask is whether the exposures have biologically significant consequences for the individual or population (National Research Council of the National Academies, 2005).

If a marine mammal does react to an underwater sound by changing its behavior or moving a small distance, the impacts of the change may not be detrimental to the individual. For example, researchers have found during a study focusing on dolphins response to whale watching vessels in New Zealand, that when animals can cope with constraint and easily feed or move elsewhere, there's little effect on survival (Lusseau and Bejder, 2007). On the other hand, if a sound source displaces marine mammals from an important feeding or breeding area for a prolonged period and they do not have an alternate equally desirable area, impacts on the marine mammal could be negative because the disruption has biological consequences. Biological parameters or key elements having greatest importance to a marine mammal relate to its ability to mature, reproduce, and survive. For example, some elements that should be considered include the following:

- Growth: adverse effects on ability to feed;
- Reproduction: the range at which reproductive displays can be heard and the quality of mating/calving grounds; and
- Survival: sound exposure may directly affect survival, for example

where sources of a certain type are deployed in a manner that could lead to a stranding response.

The importance of the disruption and degree of consequence for individual marine mammals often has much to do with the frequency, intensity, and duration of the disturbance. Isolated acoustic disturbances such as acoustic transmissions usually have minimal consequences or no lasting effects for marine mammals. Marine mammals regularly cope with occasional disruption of their activities by predators, adverse weather, and other natural phenomena. It is also reasonable to assume that they can tolerate occasional or brief disturbances by anthropogenic sound without significant consequences.

The exposure estimates calculated by predictive models currently available reliably predict propagation of sound and received levels and measure a short-term, immediate response of an individual using applicable criteria. Consequences to populations are much more difficult to predict and empirical measurement of population effects from anthropogenic stressors is limited (National Research Council of the National Academies, 2005). To predict indirect, long-term, and cumulative effects, the processes must be well understood and the underlying data available for models. Based on each species' life history information, expected behavioral patterns in the Study Area, all of the modeled exposures resulting in temporary behavioral disturbance (Table 1), and the application of mitigation procedures proposed above, the proposed Civilian Port Defense activities are anticipated to have a negligible impact on marine mammal stocks within the Study Area.

NMFS concludes that Civilian Port Defense training activities within the Study Area would result in Level B takes only, as summarized in Table 1. The effects of these military readiness activities will be limited to short-term, localized changes in behavior and possible temporary threshold shift in the hearing of marine mammal species. These effects are not likely to have a significant or long-term impact on feeding, breeding, or other important biological functions. No take by injury or mortality is anticipated, and the potential for permanent hearing impairment is unlikely. Based on best available science NMFS concludes that exposures to marine mammal species and stocks due to the proposed training activities would result in only short-term effects from those Level B takes to most individuals exposed and would likely not affect annual rates of recruitment or survival.

Based on the analysis contained herein of the likely effects of the specified activity on marine mammals and their habitat and dependent upon the implementation of the mitigation and monitoring measures, NMFS finds that the total taking from Civilian Port Defense training activities in the Study Area will have a negligible impact on the affected species or stocks.

**Subsistence Harvest of Marine Mammals**

There are no relevant subsistence uses of marine mammals implicated by this action. Therefore, NMFS has determined that the total taking of affected species or stocks would not have an unmitigable adverse impact on the availability of such species or stocks for taking for subsistence purposes.

**NEPA**

In compliance with the National Environmental Policy Act (NEPA) of 1969 (42 United States Code 4321 *et seq.*), as implemented by the regulations published by the Council on Environmental Quality (40 CFR parts 1500–1508), the Navy prepared an Environmental Assessment (EA) to consider the direct, indirect and cumulative effects to the human environment resulting from all components of the proposed 2015 Civilian Port Defense training activities. Also in compliance with NEPA and the CEQ regulations, as well as NOAA Administrative Order 216–6, NMFS has reviewed the Navy's EA, determined it to be sufficient, and adopted that EA and signed a Finding of No Significant Impact (FONSI). The Navy's EA and NMFS' FONSI for this action may be found on the internet at *http://www.nmfs.noaa.gov/pr/permits/incidental/militay.htm.*

**ESA**

No species listed under the Endangered Species Act (ESA) are expected to be affected by the proposed Civilian Port Defense training activities and no takes of any ESA-listed species are authorized under the MMPA. Therefore, NMFS has determined that a formal section 7 consultation under the ESA is not required.

Dated: October 19, 2015.

**Perry F. Gayaldo,**

*Deputy Director, Office of Protected Resources, National Marine Fisheries Service.*

[FR Doc. 2015–26856 Filed 10–21–15; 8:45 am]

BILLING CODE 3510–22–P

## COMMODITY FUTURES TRADING COMMISSION

### Agency Information Collection Activities Under OMB Review

**AGENCY:** Commodity Futures Trading Commission.

**ACTION:** Notice.

**SUMMARY:** In compliance with the Paperwork Reduction Act of 1995 (''PRA''), this notice announces that the Information Collection Request (''ICR'') abstracted below has been forwarded to the Office of Management and Budget (''OMB'') for review and comment. The ICR describes the nature of the information collection and its expected costs and burden.

**DATES:** Comments must be submitted on or before November 23, 2015.

**ADDRESSES:** Comments regarding the burden estimated or any other aspect of the information collection, including suggestions for reducing the burden, may be submitted directly to the Office of Information and Regulatory Affairs (''OIRA'') in OMB, within 30 days of the notice's publication, by email at *OIRAsubmissions@omb.eop.gov.* Please identify the comments by OMB Control No. 3038–0096. Please provide the Commission with a copy of all submitted comments at the address listed below. Please refer to OMB Reference No. 3038–0096, found on *http://reginfo.gov.* Comments may also be mailed to the Office of Information and Regulatory Affairs, Office of Management and Budget, Attention: Desk Officer for the Commodity Futures Trading Commission, 725 17th Street NW., Washington, DC 20503, and to the Commission through the Agency's Web site at *http://comments.cftc.gov.* Follow the instructions for submitting comments through the Web site.

Comments may also be mailed to: Christopher Kirkpatrick, Secretary of the Commission, Commodity Futures Trading Commission, Three Lafayette Centre, 1155 21st Street NW., Washington, DC 20581 or by Hand Delivery/Courier at the same address.

A copy of the supporting statements for the collection of information discussed above may be obtained by visiting *http://regInfo.gov.* All comments must be submitted in English, or if not, accompanied by an English translation. Comments will be posted as received to *http://www.cftc.gov.*

**FOR FURTHER INFORMATION CONTACT:** Thomas Guerin, Division of Market Oversight, Commodity Futures Trading Commission, (202) 734–4194; email:

*tguerin@cftc.gov* and refer to OMB Control No. 3038–0096.

**SUPPLEMENTARY INFORMATION:** An agency may not conduct or sponsor, and a person is not required to respond to, a collection of information unless it displays a currently valid OMB control number. The **Federal Register** notice with a 60-day comment period soliciting comments on this collection of information was published on August 7, 2015 (80 FR 47477).

*Title:* Swap Data Recordkeeping and Reporting Requirements (OMB Control No. 3038–0096). This is a request for extension of a currently approved information collection.

*Abstract:* Section 727 of the Dodd-Frank Wall Street Reform and Consumer Protection Act (''Dodd-Frank Act'') specifically required that each swap subject to the Commodity Futures Trading Commission's jurisdiction be reported to a newly-created registered entity, the swap data repository. Section 728 of the Dodd-Frank Act specifically required the Commission to establish standards for swap data recordkeeping and reporting, including the data elements to be collected and maintained by swap data repositories for each swap. Section 729 of the Dodd-Frank Act required that at least one counterparty to each swap have an obligation to report data concerning the swap and provided for data reporting to the Commission for swaps not accepted by a swap data repository. Pursuant to this mandate, the Commission adopted 17 CFR part 45 on December 20, 2011, to establish swap data recordkeeping and reporting requirements. This ICR concerns the collections of information required by 17 CFR part 45.

The Commission estimated that approximately 30,210 entities would be affected by this ICR. That number was based on the current estimate of the total number of swap data repositories, swap execution facilities, designated contract markets, derivatives clearing organizations, swap dealers, major swap participants and other swap counterparties. The Commission did not receive any comments regarding the burden estimated or any other aspect of this ICR.

*Burden Statement:* The total annual time burden for this ICR is estimated to be 445,910 hours. This estimate includes the time to comply with swap data recordkeeping and reporting requirements codified in 17 CFR part 45. Provisions of Commission Regulations §§ 45.2, 45.3, 45.4, 45.5, 45.6, 45.7, and 45.14 result in information collection requirements within the meaning of the PRA. To the extent that the recordkeeping and reporting requirements codified in 17 CFR part 45 overlap with the requirements of other rulemakings for which the Commission prepared and submitted an information collection burden estimate to OMB, the burden associated with the requirements are not being accounted for in this ICR to avoid unnecessary duplication of information collection burdens.

*Respondents/Affected Entities:* Swap data repositories, swap execution facilities, designated contract markets, derivatives clearing organizations, swap dealers, major swap participants and other swap counterparties (*i.e.,* non-swap dealer/non-major swap participant counterparties).

*Estimated Number of Respondents:* 30,210.

*Estimated Total Annual Burden on Respondents:* 445,910 hours.

*Frequency of Collection:* Ongoing.

**Authority:** 44 U.S.C. 3501 *et seq.*

Dated: October 19, 2015

**Robert N. Sidman,**

*Deputy Secretary of the Commission.*

[FR Doc. 2015–26833 Filed 10–21–15; 8:45 am]

**BILLING CODE 6351–01–P**

## DEPARTMENT OF DEFENSE

### Department of the Army, Corps of Engineers

### Proposed Changes in Levels of Service at Locks and Dams on the Ouachita and Black Rivers

**AGENCY:** U.S. Army Corps of Engineers, DoD.

**ACTION:** Notice.

**SUMMARY:** It is proposed that the hours of availability at Jonesville and Columbia Locks on the Ouachita and Black Rivers will be increased from the current schedule of 20 hours per day, separated into two 10 hour periods, 5:00 a.m. to 3:00 p.m. and 5:00 p.m. to 3:00 a.m., 7 days per week, 365 days per year to 24 hours per day, 7 days per week, 365 days per year. It is also proposed that the hours of availability at Felsenthal and H.K. Thatcher Locks on the Ouachita and Black Rivers will be reduced from the current schedule of 16 hours per day, separated into two 8 hour periods, 5:00 a.m. to 1:00 p.m. and 5:00 p.m. to 1:00 a.m., 7 days per week, 365 days per year to a 10 hour period, 5:00 a.m. to 3:00 p.m. Monday through Friday. The reduced levels of service are in response to the Inland Marine Transportation System Guidelines for Establishing and Implementing Levels of Operating Service which sets forth criteria for determining hours of availability, based on lock usage data. The intended effect is to provide lock availability that matches existing lock usage by commercial industry. The Vicksburg District will continue to work with industry to optimize the hours of availability and make adjustments as needed.

**DATES:** Proposed implementation date is November 15, 2015.

**ADDRESSES:** Submit written comments, in duplicate, to Mr. James V. Ross, Chief, Operations Division, Vicksburg District, US Army Corps of Engineers, 4155 Clay Street, Vicksburg, MS 39183, or deliver them to Mr Ross between the hours of 8:00 a.m. and 4:00 p.m., Monday through Friday at the address above. Comments received and other materials relevant to the proposed reduction in hours of lock availability can be inspected at Mr. Ross' office during the same hours. An appointment will be required for inspection, so please call ahead to make an appointment and to avoid conflicts with inspections by other interested parties. Phone: 601–631–5315

**FOR FURTHER INFORMATION CONTACT:** Mr. Thomas Hengst at the Corps of Engineers, Vicksburg District, River Operations Branch, by phone at 601–631–5600.

**SUPPLEMENTARY INFORMATION:** The legal authority for the regulation governing the use, administration, and navigation of the Ouachita and Black Rivers and Locks is Section 4 of the River and Harbor Act of August 18, 1894 (28 Stat. 362), as amended, which is codified at 33 U.S.C. Section 1. This statute requires the Secretary of the Army to ''prescribe such regulations for the use, administration, and navigation of the navigable waters of the United States'' as the Secretary determines may be required by public necessity. Reference 33 CFR part 207.249, Ouachita and Black Rivers, Ark. and La., Mile 0.0 to Mile 338.0 (Camden, Ark.) above the mouth of the Black River; the Red River, La., Mile 6.7 (Junction of Red, Atchafalaya and Old Rivers) to Mile 276.0 (Shreveport, La.); use, administration, and navigation.

**John W. Cross,**

*Colonel, Corps of Engineers, Commanding.*

[FR Doc. 2015–26888 Filed 10–21–15; 8:45 a.m.]

**BILLING CODE 3720–58–P**

## DEPARTMENT OF DEFENSE

### Department of the Army; Corps of Engineers

### Availability of a Final Integrated Feasibility Report (Feasibility Study/ Environmental Impact Statement/ Environmental Impact Report), Los Angeles River Ecosystem Restoration Study, City of Los Angeles, Los Angeles County, CA

**AGENCY:** Department of the Army, U.S. Army Corps of Engineers, DoD.

**ACTION:** Notice; extension of comment period.

**SUMMARY:** The comment period for the Final Integrated Feasibility Report (Feasibility Study/Environmental Impact Statement/Environmental Impact Report), Los Angeles River Ecosystem Restoration Study, City of Los Angeles, Los Angeles County, CA published in the **Federal Register** on Friday, September 25, 2015 (80 FR 57795) and required comments be submitted by October 24, 2015. The comment period has been extended to November 1, 2015.

**FOR FURTHER INFORMATION CONTACT:** Ms. Eileen Takata, U.S. Army Corps of Engineers, Los Angeles District, *Eileen.K.Takata@usace.army.mil* OR Ms. Erin Jones, U.S. Army Corps of Engineers, Los Angeles District, *Erin.L.Jones@usace.army.mil.*

**SUPPLEMENTARY INFORMATION:** None.

**Kirk E. Gibbs,**

*Colonel, U.S. Army, Commander and District Engineer.*

[FR Doc. 2015–26886 Filed 10–21–15; 8:45 am]

BILLING CODE 3720–58–P

## DELAWARE RIVER BASIN COMMISSION

### Notice of Proposed Methodology for the 2016 Delaware River and Bay Water Quality Assessment Report

**AGENCY:** Delaware River Basin Commission.

**ACTION:** Notice.

**SUMMARY:** Notice is hereby given that the methodology proposed to be used in the 2016 Delaware River and Bay Water Quality Assessment Report is available for review and comment.

**DATES:** Comments on the assessment methodology or recommendations for the consideration of data sets should be submitted in writing by 5 p.m. Eastern on December 31, 2015.

**ADDRESSES:** Comments will be accepted *via* email to *john.yagecic@drbc.nj.gov,* with ''Water Quality Assessment 2016'' as the subject line; *via* fax to 609–883–9522; *via* U.S. Mail to DRBC, Attn: Water Quality Assessment 2016, P.O. Box 7360, West Trenton, NJ 08628–0360; *via* private carrier to DRBC, Attn: Water Quality Assessment 2016, 25 State Police Drive, West Trenton, NJ 08628–0360; or by hand to the latter address. All submissions should have the phrase ''Water Quality Assessment 2016'' in the subject line and should include the name, address (street address optional) and affiliation, if any, of the commenter.

**FOR FURTHER INFORMATION CONTACT:** Mr. John Yagecic, Supervisor, Standards and Assessment Section, DRBC Modeling, Monitoring and Assessment Branch, *john.yagecic@drbc.nj.gov,* 609–883–9500, ext. 271.

**SUPPLEMENTARY INFORMATION:** The Delaware River Basin Commission (''DRBC'' or ''Commission'') is an interstate and federal compact agency that was created in 1961 by concurrent legislation of the States of Delaware, New Jersey, and New York, the Commonwealth of Pennsylvania and the United States Government for purpose of jointly managing the water resources of the Delaware River Basin.

DRBC currently is compiling data for the *2016 Delaware River and Bay Water Quality Assessment Report* (''2016 Assessment'') required by the federal Clean Water Act (''CWA''). The 2016 Assessment will present the extent to which waters of the Delaware River and Bay are attaining designated uses in accordance with Section 305(b) of the CWA and the Commission's Water Quality Regulations, 18 CFR part 410, and will identify impaired waters, which consist of waters in which surface water quality standards are not being met.

The proposed assessment methodology to be used in the 2016 Assessment is available for review at the following URL: *http://www.nj.gov/drbc/library/documents/Methodology-2016WQAssess-draft_sept2015.pdf.*

Dated: October 16, 2015.

**Pamela M. Bush,**

*Commission Secretary.*

[FR Doc. 2015–26838 Filed 10–21–15; 8:45 am]

BILLING CODE 6360–01–P

## DELAWARE RIVER BASIN COMMISSION

### Notice of Public Hearing and Business Meeting November 10 and December 9, 2015

Notice is hereby given that the Delaware River Basin Commission will hold a public hearing on Tuesday, November 10, 2015. A business meeting will be held the following month, on Wednesday, December 9, 2015. The hearing and business meeting are open to the public and will be held at the Washington Crossing Historic Park Visitor Center, 1112 River Road, Washington Crossing, Pennsylvania.

*Public Hearing.* The public hearing on November 10, 2015 will begin at 1:30 p.m. Hearing items will include: draft dockets for the withdrawals, discharges and other water-related projects subject to the Commission's review; and a resolution authorizing the Executive Director to enter into an agreement with the University of Delaware for an analysis of water quality data collected by the University on the Cape May—Lewes Ferry, which will be used by the Commission and the U.S. Army Corps of Engineers to refine water quality models of the Delaware Estuary and Delaware Bay.

The list of projects scheduled for hearing, including project descriptions, will be posted on the Commission's Web site, *www.drbc.net,* in a long form of this notice at least ten days before the hearing date. Draft resolutions scheduled for hearing also will be posted at *www.drbc.net* ten or more days prior to the hearing.

Written comments on matters scheduled for hearing on November 10 will be accepted through the close of business (5 p.m.) on November 12, the day following the Veterans' Day Holiday. After the hearing on all scheduled matters has been completed, and as time allows, an opportunity for Open Public Comment (formerly known as ''public dialogue'') will also be provided.

*The public is advised to check the Commission's Web site periodically prior to the hearing date, as items scheduled for hearing may be postponed if additional time is deemed necessary to complete the Commission's review, and items may be added up to ten days prior to the hearing date. In reviewing docket descriptions, the public is also asked to be aware that project details commonly change in the course of the Commission's review, which is ongoing.*

*Public Meeting.* The public business meeting on December 9, 2015 will begin

at 1:30 p.m. and will include: adoption of the Minutes of the Commission's September 16, 2015 business meeting, announcements of upcoming meetings and events, a report on hydrologic conditions, reports by the Executive Director and the Commission's General Counsel, and consideration of any items for which a hearing has been completed or is not required. After all scheduled business has been completed and as time allows, the meeting will also include up to one hour of Open Public Comment.

There will be no opportunity for additional public comment for the record at the December 9 business meeting on items for which a hearing was completed on November 10 or a previous date. Commission consideration on December 9 of items for which the comment period is closed may result in approval of the item (by docket or resolution) as proposed, approval with changes, denial, or deferral. When the Commissioners defer an action, they may announce an additional period for written comment on the item, with or without an additional hearing date, or they may take additional time to consider the input they have already received without requesting further public input. Any deferred items will be considered for action at a public meeting of the Commission on a future date. Items for which a public hearing has been completed and on which the Commission has not yet acted include a proposed rule amending DRBC's *Administrative Manual Part III—Rules of Practice and Procedure* to provide for the One Process/One Permit Program.

*Advance Sign-Up for Oral Comment.* Individuals who wish to comment for the record at the public hearing on November 10 or to address the Commissioners informally during the Open Public Comment portion of the meeting on either November 10 or December 9 as time allows, are asked to sign up in advance by contacting Ms. Paula Schmitt of the Commission staff, at *paula.schmitt@drbc.nj.gov* or by phoning Ms. Schmitt at 609–883–9500 ext. 224.

*Addresses for Written Comment.* Written comment on items scheduled for hearing may be delivered by hand at the public hearing or in advance of the hearing, either: by hand, U.S. Mail or private carrier to: Commission Secretary, P.O. Box 7360, 25 State Police Drive, West Trenton, NJ 08628; by fax to Commission Secretary, DRBC at 609–883–9522; or by email (preferred) to *paula.schmitt@drbc.nj.gov.* If submitted by email in advance of the hearing date, written comments on a docket should also be sent to Mr. William Muszynski, Manager, Water Resources Management, at *william.muszynski@drbc.nj.gov.*

*Accommodations for Special Needs.* Individuals in need of an accommodation as provided for in the Americans with Disabilities Act who wish to attend the informational meeting, conference session or hearings should contact the Commission Secretary directly at 609–883–9500 ext. 203 or through the Telecommunications Relay Services (TRS) at 711, to discuss how we can accommodate your needs.

*Updates.* Items scheduled for hearing are occasionally postponed to allow more time for the Commission to consider them. Other meeting items also are subject to change. Please check the Commission's Web site, *www.drbc.net,* closer to the meeting date for changes that may be made after the deadline for filing this notice.

*Additional Information, Contacts.* The list of projects scheduled for hearing, with descriptions, will be posted on the Commission's Web site, *www.drbc.net,* in a long form of this notice at least ten days before the hearing date. Draft dockets and resolutions for hearing items will be available as hyperlinks from the posted notice. Additional public records relating to hearing items may be examined at the Commission's offices by appointment by contacting Carol Adamovic, 609–883–9500, ext. 249. For other questions concerning hearing items, please contact Project Review Section assistant Victoria Lawson at 609–883–9500, ext. 216.

Dated: October 16, 2015.

**Pamela M. Bush,**

*Commission Secretary and Assistant General Counsel.*

[FR Doc. 2015–26837 Filed 10–21–15; 8:45 am]

**BILLING CODE 6360–01–P**

## DEPARTMENT OF EDUCATION

### National Board for Education Sciences

**AGENCY:** Institute of Education Sciences, U.S. Department of Education.

**ACTION:** Announcement of an open meeting.

**SUMMARY:** This notice sets forth the schedule and proposed agenda of an upcoming meeting of the National Board for Education Sciences (NBES). The notice also describes the functions of the Committee. Notice of this meeting is required by Section 10(a) (2) of the Federal Advisory Committee Act and is intended to notify the public of their opportunity to attend the meeting.

**DATES:** The NBES meeting will be held on November 16, 2015, from 9:00 a.m. to 4:30 p.m. Eastern Standard Time.

**ADDRESSES:** 80 F Street NW., Large Board Room, Washington, DC 20001.

**FOR FURTHER INFORMATION CONTACT:** Ellie Pelaez, Designated Federal Official, NBES, U.S. Department of Education, 555 New Jersey Avenue NW., Room 600 E, Washington, DC 20208; phone: (202) 219–0644; fax: (202) 219–1402; email: *Ellie.Pelaez@ed.gov.*

**SUPPLEMENTARY INFORMATION:** *NBES's Statutory Authority and Function:* The National Board for Education Sciences is authorized by Section 116 of the Education Sciences Reform Act of 2002 (ESRA), *20 U.S.C. 9516.* The Board advises the Director of the Institute of Education Sciences (IES) on, among other things, the establishment of activities to be supported by the Institute and the funding for applications for grants, contracts, and cooperative agreements for research after the completion of peer review. The Board also reviews and evaluates the work of the Institute.

*Meeting Agenda:* On November 16, 2015, starting at 9:00 a.m., the Board meeting will commence and members will approve the agenda. From 9:05 a.m. to 10:30 a.m., the Board will hear presentations from the Commissioners of the IES Centers for Education Research, Special Education Research, Education Evaluation and Regional Assistance, and Education Statistics. This session will be followed by a question and answer period for board members, regarding the Commissioners' reports. A break will take place from 10:30 a.m. to 10:45 a.m.

The Board meeting will resume from 10:45 a.m. to 12:00 p.m. when the Board will discuss the IES Standards and Review Office. Anne Ricciuti, Deputy Director for Science, will provide opening remarks followed by a roundtable discussion with board members. The meeting will break for lunch from 12:00 p.m. to 1:00 p.m.

From 1:00 p.m. to 2:30 p.m., the board will participate in a discussion on the National Center for Education Statistics (NCES). Peggy Carr, Acting Commissioner, National Center for Education Statistics, will provide opening remarks, followed by a panel discussion with the Associate Commissioners of the National Center for Education Statistics. Roundtable discussion by board members will take place after the panel discussion. A break will take place from 2:30 p.m. to 2:45 p.m.

The meeting will resume at 2:45 p.m. to 4:15 p.m. when the Board will hold

a panel discussion with National Center for Education Statistics stakeholders. Peggy Carr will provide opening remarks, followed by a panel discussion.

Closing remarks will take place from 4:15 p.m. to 4:30 p.m., with adjournment scheduled for 4:30 p.m.

*Submission of comments regarding the Board's policy recommendations:* There will not be an opportunity for public comment. However, members of the public are encouraged to submit written comments related to NBES to Ellie Pelaez (see contact information above) no later than November 2, 2015. A final agenda is available from Ellie Pelaez (see contact information above) and is posted on the Board Web site *http://ies.ed.gov/director/board/agendas/index.asp.*

*Access to Records of the Meeting:* The Department will post the official report of the meeting on the NBES Web site no later than 90 days after the meeting. Pursuant to the FACA, the public may also inspect the materials at 555 New Jersey Avenue NW., 6th Floor, Washington, DC, by emailing *Ellie.Pelaez@ed.gov* or by calling (202) 219–0644 to schedule an appointment.

*Reasonable Accommodations:* The meeting site is accessible to individuals with disabilities. If you will need an auxiliary aid or service to participate in the meeting (*e.g.,* interpreting service, assistive listening device, or materials in an alternate format), notify the contact person listed in this notice by or before November 2, 2015. Although we will attempt to meet a request received after November 2, 2015, we may not be able to make available the requested auxiliary aid or service because of insufficient time to arrange it.

*Electronic Access to this Document:* The official version of this document is the document published in the **Federal Register**. Free Internet access to the official edition of the **Federal Register** and the Code of Federal Regulations is available via the Federal Digital System at: *www.gpo.gov/fdsys.* At this site you can view this document, as well as all other documents of this Department published in the **Federal Register**, in text or Adobe Portable Document Format (PDF). To use PDF, you must have Adobe Acrobat Reader, which is available free at the site. You may also access documents of the Department published in the **Federal Register** by using the article search feature at: *www.federalregister.gov.* Specifically, through the advanced search feature at this site, you can limit your search to documents published by the Department.

**Authority:** Section 116 of the Education Sciences Reform Act of 2002 (ESRA), *20 U.S.C. 9516*

**Ruth Neild,**

*Deputy Director for Policy and Research, Delegated Duties of the Director, Institute of Education Sciences.*

[FR Doc. 2015–26954 Filed 10–21–15; 8:45 am]

BILLING CODE P

## DEPARTMENT OF EDUCATION

**[CFDA Number: 84.420A.;Docket ID ED–2015–OCTAE–0095]**

## Proposed Priorities, Requirements, Definitions, and Selection Criteria—Performance Partnership Pilots for Disconnected Youth

**AGENCY:** Office of Career, Technical, and Adult Education, Department of Education.

**ACTION:** Proposed priorities, requirements, definitions, and selection criteria.

**SUMMARY:** The Assistant Secretary for Career, Technical, and Adult Education (Assistant Secretary) proposes priorities, requirements, definitions, and selection criteria under the Performance Partnership Pilots (P3) for Disconnected Youth competition. The Assistant Secretary may use the priorities, requirements, definitions, and selection criteria for competitions in fiscal year (FY) 2015 and later years. We take this action in order to support the identification of strong and effective pilots that are likely to achieve significant improvements in educational, employment, and other key outcomes for disconnected youth.

**DATES:** We must receive your comments on or before November 23, 2015.

**ADDRESSES:** Submit your comments electronically through the Federal eRulemaking Portal at *www.regulations.gov* by selecting Docket No. ED–2015–OCTAE–0095 or via postal mail, commercial delivery, or hand delivery. We will not accept comments submitted by fax or by email or those submitted after the comment period. To ensure that we do not receive duplicate copies, please submit your comments only once. In addition, please include the Docket ID at the top of your comments.

If you are submitting comments electronically, we strongly encourage you to submit any comments or attachments in Microsoft Word format. If you must submit a comment in Adobe Portable Document Format (PDF), we strongly encourage you to convert the PDF to print-to-PDF format or to use some other commonly used searchable text format. *Please do not submit the PDF in a scanned format.* Using a print-to-PDF format allows the U.S. Department of Education (the Department) to electronically search and copy certain portions of your submissions.

- *Federal eRulemaking Portal:* Go to *www.regulations.gov* to submit your comments electronically. Information on using *www.regulations.gov,* including instructions for accessing agency documents, submitting comments, and viewing the docket, is available on the site under ''Are you new to the site?''
- *Postal Mail, Commercial Delivery, or Hand Delivery:* The Department strongly encourages commenters to submit their comments electronically. However, if you mail or deliver your comments about the proposed regulations, address them to Braden Goetz, U.S. Department of Education, 400 Maryland Avenue SW., Room 11141, PCP, Washington, DC 20202.

*Privacy Note:* The Department's policy is to make all comments received from members of the public available for public viewing in their entirety on the Federal eRulemaking Portal at *www.regulations.gov.* Therefore, commenters should be careful to include in their comments only information that they wish to make publicly available.

**FOR FURTHER INFORMATION CONTACT:** Braden Goetz. Telephone: (202) 245–7405 or by email: *braden.goetz@ed.gov.*

If you use a telecommunications device for the deaf (TDD) or a text telephone (TTY), call the Federal Relay Service (FRS), toll free, at 1–800–877–8339.

**SUPPLEMENTARY INFORMATION:**

*Invitation to Comment:* We invite you to submit comments regarding this notice. To ensure that your comments have maximum effect in developing the notice of final priorities, requirements, definitions, and selection criteria (NPP), we urge you to identify clearly the specific proposed priority, requirement, definition, or selection criterion your comment addresses.

We invite you to assist us in complying with the specific requirements of Executive Orders 12866 and 13563 and their overall requirement of reducing regulatory burden that might result from the proposed priority, requirements, definitions, and selection criteria. Please let us know of any further ways we could reduce potential costs or increase potential benefits while preserving the effective and efficient administration of the program.

During and after the comment period, you may inspect all public comments about the proposed priority, requirements, definitions, and selection criteria at *www.regulations.gov.* You may also inspect the comments in person in Room 11141, PCP, 400 Maryland Avenue SW., Washington, DC, between the hours of 8:30 a.m. and 4:00 p.m., Washington, DC time, Monday through Friday of each week except Federal holidays. If you want to schedule time to inspect comments, please contact the person listed under **FOR FURTHER INFORMATION CONTACT**.

*Assistance to Individuals with Disabilities in Reviewing the Rulemaking Record:* On request we will provide an appropriate accommodation or auxiliary aid to an individual with a disability who needs assistance to review the comments or other documents in the public rulemaking record for this notice. If you want to schedule an appointment for this type of accommodation or auxiliary aid, please contact the person listed under **FOR FURTHER INFORMATION CONTACT**.

*Purpose of Program:* P3, first authorized by Congress for FY 2014 by the Consolidated Appropriations Act, 2014 (2014 Appropriations Act) and reauthorized for FY 2015 by the Consolidated and Further Continuing Appropriations Act, 2015 (2015 Appropriations Act) (together, the Acts), enables pilot sites to test innovative, outcome-focused strategies to achieve significant improvements in educational, employment, and other key outcomes for disconnected youth using new flexibility to blend existing Federal funds and to seek waivers of associated program requirements.

**Program Authority:** Section 524 of Division H and section 219 of Division B of the Consolidated and Further Continuing Appropriations Act, 2015 (Public Law 113–235).

*Background*

The Acts authorize the Departments of Education (ED), Labor (DOL), Health and Human Services (HHS), and Justice (DOJ), the Corporation for National and Community Service (CNCS) and the Institute of Museum and Library Services (IMLS) (collectively, the Agencies) to enter into Performance Partnership Agreements (performance agreements) with State, local, or tribal governments to provide additional flexibility in using certain of the Agencies' discretionary funds,[1] including competitive and formula grant funds, across multiple Federal programs. Entities that seek to participate in these pilots will be required to commit to achieving significant improvements in outcomes for disconnected youth in exchange for this new flexibility. The 2014 Appropriations Act states that "'[t]o improve outcomes for disconnected youth' means to increase the rate at which individuals between the ages of 14 and 24 (who are low-income and either homeless, in foster care, involved in the juvenile justice system, unemployed, or not enrolled in or at risk of dropping out of an educational institution) achieve success in meeting educational, employment, or other key goals." Section 526(a)(2), Division H, 2014 Appropriations Act. The statute thus defines "disconnected youth" as "individuals between the ages of 14 and 24 who are low-income and either homeless, in foster care, involved in the juvenile justice system, unemployed, or not enrolled in or at risk of dropping out of an education institution."

Government and community partners have invested considerable attention and resources to meet the needs of disconnected youth. However, practitioners, youth advocates, and others on the front lines of service delivery have observed that there are significant programmatic and administrative obstacles to achieving meaningful improvements in education, employment, health, and well-being for these young people. These challenges include: limited evidence and knowledge of what works to improve outcomes for disconnected youth; poor coordination and alignment across the multiple systems that serve youth; policies that make it hard to target the neediest youth and help them overcome gaps in services; fragmented data systems that inhibit the flow of information to improve results; and administrative requirements that impede holistic approaches to serving this population. Many of these challenges can be addressed by improving coordination among programs and targeting resources to those approaches that achieve the best results for youth.

Performance Partnership Pilots test the hypothesis that additional flexibility for States, localities, and tribes, in the form of blending funds and waivers of certain programmatic requirements, can help overcome some of the significant hurdles that States, localities, and tribes face in providing intensive, comprehensive, and sustained service pathways and improving outcomes for disconnected youth. For example, P3 may help address the "wrong pockets" problem, where government entities that observe improved outcomes or other benefits due to an intervention are unable to use Federal funds to support that intervention due to program restrictions or other factors. P3 funds may also help to build additional evidence about the effectiveness of an intervention or strengthen a foundation of data capacity and performance management that would otherwise be lacking. If this hypothesis proves true, providing necessary and targeted flexibility to remove or minimize these hurdles will help to achieve significant benefits for disconnected youth, the communities that serve them, and the involved agencies and partners.

Congress first established the P3 authority in FY 2014, and the Agencies announced a competition to select up to 10 P3 pilots in the **Federal Register** on November 24, 2014 (79 FR 70033) (the November 2014 notice). The Agencies will make selections based on the November 2014 notice during fiscal year 2015.

The priorities, requirements, definitions, and selection criteria proposed in this notice are based largely on those used in the November 2014 notice. However, they differ in several important respects:

- As in the November 2014 notice, we are proposing priorities for projects that serve disconnected youth in rural and tribal communities. We also are proposing additional priorities that focus on high-need subpopulations of disconnected youth, including priorities for: disconnected youth who are unemployed and not enrolled in education; English learners; individuals with disabilities; homeless; in foster care; involved with the justice system; or immigrants or refugees. The Agencies may choose to use one or more of these additional priorities in future competitions if they decide to encourage or require pilots that are designed to serve a particular high-need subpopulation.
- In addition, we are proposing a priority for projects that provide paid work-based learning opportunities, including opportunities that are offered during the summer months and are integrated with academic and technical instruction.
- The November 2014 notice included two priorities related to

[1] Discretionary funds are funds that Congress appropriates on an annual basis, rather than through a standing authorization. They exclude "entitlement" (or mandatory) programs such as Social Security, Medicare, Medicaid, most Foster Care IV–E programs, Vocational Rehabilitation State Grants, and Temporary Assistance to Needy Families (TANF). Discretionary programs administered by the Agencies support a broad set of public services, including education, job training, health and mental health, and other low-income assistance programs.

evaluation, one for evaluations that employed a randomized controlled trial design and another for evaluations with a quasi-experimental design. In this notice, we are proposing to establish a single priority for projects that will support evaluations that use either a randomized controlled trial or a quasi-experimental design.

• To reduce burden on applicants, several of the application requirements have been eliminated or streamlined.

Additionally, we are proposing to collect some of the required information in table form for two reasons: to make clearer to applicants all of the data they must provide in their applications and to simplify how applicants provide these data.

• The selection criteria we are proposing in this notice have also been streamlined and simplified to reduce burden on applicants, as well as focus on the factors that we consider to be the most critical in the successful implementation of pilots.

In addition to commenting on the priorities, requirements, definitions, and selection criteria proposed in this notice, we invite public comment on the following questions:

• How else can the administration of P3 competitions be improved?

• Should other programs, including those from other agencies, be included in the P3 initiative? What programs and why?

• What interest, if any, do prospective applicants and their potential partners have in using a P3 pilot to support or inform a Pay for Success [2] project?

• What technical assistance do prospective applicants need in order to prepare their applications, particularly with respect to identifying appropriate program requirements that might be modified or waived and programs that may be eligible for use in a P3 pilot?

• What, if any, State or local barriers inhibit successful implementation of P3 pilots?

• What, if any, mandatory program requirements create barriers to the successful implementation of P3 pilots?

*Proposed Priorities*

This notice contains 12 proposed priorities. We may apply one or more of these priorities in any year in which this program is in effect. Please note that these priorities are not listed in any particular order of importance or preference.

**Proposed Priority 1—Improving Outcomes for Disconnected Youth**

*Background*

P3 is intended, through demonstration, to identify effective strategies for serving disconnected youth. The Agencies are aware such strategies may differ across environments and wish to test the authority in a variety of settings. Projects that serve disconnected youth in any community would meet Proposed Priority 1.

*Proposed Priority*

To meet this priority, an applicant must propose a pilot that is designed to improve outcomes for disconnected youth.

**Proposed Priority 2—Improving Outcomes for Disconnected Youth in Rural Communities**

*Background*

In recognition of the special needs of disconnected youth who reside in rural communities, we are proposing to establish a priority for projects that serve rural communities only. We note, for example, that 85 percent of the U.S. counties that have been persistently poor (*i.e.,* counties in which 20 percent or more of the population live in poverty) over the last 30 years are rural, accounting for 15 percent of rural counties.[3] Moreover, rural areas have a higher proportion of youth ages 18 through 24 who are neither employed nor enrolled in school than do urban areas.[4]

In the Definitions section of this notice, we have proposed a definition of rural community that is based on whether a community is served only by one or more local educational agencies (LEAs) that are currently eligible under the Department of Education's Small, Rural School Achievement (SRSA) program or the Rural and Low-Income School (RLIS) program authorized under Title VI, Part B of the Elementary and Secondary Education Act of 1965 (ESEA), as amended. Alternatively, a community also could be considered rural if it includes only schools designated by the National Center for Education Statistics (NCES) with a locale code of 42 or 43. This definition was used in the 2014 notice, as well in notices inviting applications for the Department of Education's Promise Neighborhoods program. We welcome comments on whether this definition is appropriate for use in connection with a P3 competition utilizing this priority.

*Proposed Priority*

To meet this priority, an applicant must propose a pilot that is designed to improve outcomes for disconnected youth in one or more rural communities (as defined in this notice) only.

**Proposed Priority 3—Improving Outcomes for Disconnected Youth in Tribal Communities**

*Background*

We propose a priority for projects that will serve youth in tribal communities because American Indian and Alaska Native youth are among the most disadvantaged subpopulations of youth in our country. During school year 2012–13, American Indian and Alaska Native youth had the lowest average cohort graduation rate among all ethnic groups, with an average of only 70 percent of American Indian and Alaska Native youth completing high school within four years.[5] The average cohort graduation rate among White students, in contrast, was 87 percent. We note as well that the poverty rate among American Indians and Alaska Natives in 2013 was nearly twice the rate for the Nation as a whole (29 percent vs. 16 percent).[6]

*Proposed Priority*

To meet this priority, an applicant must (1) propose a pilot that is designed to improve outcomes for disconnected youth who are members of one or more State- or federally-recognized Indian tribal communities; and (2) represent a partnership that includes one or more State- or federally-recognized Indian tribes.

**Proposed Priority 4—Improving Outcomes for Youth Who Are Unemployed and Out of School**

*Background*

In 2013, about 14 percent of youth ages 16 to 24 were neither enrolled in school nor working.[7] We propose a priority for pilots that serve these youth because the dearth of opportunities for

[2] For more information about Pay for Success, see the U.S. Treasury Department's notice in the October 2, 2013, **Federal Register** (78 FR 60998), Strategies to Accelerate the Testing and Adoption of Pay for Success (PFS) Financing Models.

[3] United States Department of Agriculture, Economic Research Service, ''The Geography of Poverty,'' available at *www.ers.usda.gov/topics/rural-economy-population/rural-poverty-well-being/geography-of-poverty.aspx.3*

[4] Snyder, A. and McLaughlin, D. (2008). Rural Youth are More Likely to be Idle. Durham, NH: Carsey Institute.

[5] EDFacts/Consolidated State Performance Report, SY 2012–13. See *https://nces.ed.gov/ccd/tables/ACGR_RE_and_characteristics_2012-13.asp.*

[6] 2011–2013 American Community Survey.

[7] Kena, G., Musu-Gillette, L., Robinson, J., Wang, X., Rathbun, A., Zhang, J., Wilkinson-Flicker, S., Barmer, A., and Dunlop Velez, E. (2015). The Condition of Education 2015 (NCES 2015–144). U.S. Department of Education, National Center for Education Statistics. Washington, DC. Retrieved June 7, 2015 from *http://nces.ed.gov/pubsearch.*

these youth is costly for them and for taxpayers. The longer these youth remain disconnected from school and work, the more likely it becomes that they will remain unemployed and live in poverty as adults.[8] The lack of opportunities for these youth also imposes a significant economic burden on taxpayers; by one estimate, the per person cost of these disconnected youth is $13,900 per year in lost tax revenue, additional health care spending, expenditures for the criminal justice system and corrections, and welfare and social service payments.[9]

*Proposed Priority*

To meet this priority, an applicant must propose a pilot that is designed to improve outcomes for disconnected youth who are neither employed nor enrolled in education.

**Proposed Priority 5—Improving Outcomes for Youth Who are English Learners**

*Background*

We are proposing to establish a priority for projects that serve disconnected youth who are English learners (ELs) because of the significant opportunity and achievement gaps these young people face. While the national average cohort graduation rate for all youth was 81 percent for the 2012–13 school year, the average cohort graduation rate for ELs was only 61 percent. In some States, the average cohort graduation rate for ELs was as low as 22 percent.[10]

In the Definitions section of this notice, we have proposed a definition of English learner that is based on the definition of ''English language learner'' in section 203 of the Workforce Innovation and Opportunity Act (29 U.S.C. 3272(7)). We welcome comments on whether this definition is appropriate for use in connection with a P3 competition utilizing this priority.

*Priority*

To meet this priority, an applicant must propose a pilot that is designed to improve outcomes for disconnected youth who are English learners (as defined in this notice).

**Proposed Priority 6—Improving Outcomes for Youth with a Disability**

*Background*

We are proposing to establish a priority for projects that serve disconnected youth with a disability because youth with a disability graduate at significantly lower rates than their peers who do not have a disability. For example, during the 2012–13 school year, the average cohort graduation rate for children with a disability receiving special education and related services under the Individuals with Disabilities Education Act was 62 percent, while the average cohort graduation rate for all youth was 81 percent.[11] Dropout rates within this population are highest among youth with learning disabilities, emotional disturbances, and traumatic brain injuries.[12]

As noted in the Definitions section of this notice, to define the term ''individual with a disability,'' we propose to use the definition found in section 3 of the Americans with Disabilities Act of 1990 (42 U.S.C. 12102). We welcome comments on whether this proposed definition is appropriate for use in connection with a P3 competition utilizing this priority.

*Priority*

To meet this priority, an applicant must propose a pilot that is designed to improve outcomes for disconnected youth who are individuals with a disability (as defined in this notice).

**Proposed Priority 7—Improving Outcomes for Homeless Youth**

*Background*

According to the U.S. Department of Housing and Urban Development's 2014 Annual Homeless Assessment Report to Congress, on a given night in January 2014, there were approximately 194,302 homeless children and youth ages 24 and younger, representing one-third of the individuals who were homeless that night. Of these children and youth, 45,205 were unaccompanied children and youth who experienced homelessness alone.[13] Between the 2010–11 and 2013–14 school years, the number of homeless students reported by LEAs under the McKinney-Vento Homeless Assistance Act increased 28 percent, from 1,065,794 to 1,360,747 students. The number of unaccompanied homeless youth reported by LEAs increased from 55,066 to 91,351 between the 2010–11 and 2013–14 school years.[14] The National Alliance to End Homelessness estimates that, over the course of a year, approximately 550,000 unaccompanied children and youth ages 24 and younger experience a homelessness episode of longer than one week.[15] We propose to establish a priority for projects that will serve disconnected youth who are homeless in recognition of their significant needs. These young people experience higher rates of acute and chronic physical illness and have higher rates of mental illness and substance abuse than their peers who have stable housing. The high mobility associated with homelessness also disrupts the education of these youth, placing them at greater risk of falling behind and dropping out of school.[16]

As noted in the Definitions section of this notice, to define the term ''homeless youth,'' we propose to use the definition in the McKinney-Vento Homeless Assistance Act (42 U.S.C. 11431, *et seq.*). We welcome comments on whether this definition is appropriate for use in connection with a P3 competition utilizing this priority.

*Proposed Priority*

To meet this priority, an applicant must propose a pilot that is designed to improve outcomes for disconnected youth who are homeless youth (as defined in this notice).

**Proposed Priority 8—Improving Outcomes for Youth in Foster Care**

*Background*

We are proposing a priority for projects that are designed to improve outcomes for youth who are or have

[8] Besharov, D.J., & Gardiner, K.N. (1998). Preventing Youthful Disconnectedness. Children and Youth Services Review, 20 (9/10), 797–818.

[9] Belfield, C.R., Levin, H.M., and Rosen, R. (2012). The Economic Value of Opportunity Youth. Washington, DC: Civic Enterprises.

[10] EDFacts/Consolidated State Performance Report, SY 2012–13. See *https://nces.ed.gov/ccd/tables/ACGR_RE_and_characteristics_2012-13.asp.*

[11] *Ibid.*

[12] Wagner, M., Newman, L., Cameto, R., Garza, N., and Levine, P. (2005). After High School: A First Look at the Postschool Experiences of Youth with Disabilities. A Report from the National Longitudinal Transition Study-2 (NLTS2) Menlo Park, CA: SRI International. Available at *www.nlts2.org/reports/2005_04/nlts2_report_2005_04_complete.pdf.*

[13] Henry, M., Cortes, A., Shivji, A. and Buck, K. (2014). The 2014 Annual Homeless Assessment Report to Congress. Washington, DC: U.S. Department of Housing and Urban Development. Retrieved on June 8, 2015 from *www.hudexchange.info/resources/documents/2014-AHAR-Part1.pdf*

[14] Education for Homeless Children and Youth Consolidated State Performance Report Data: School Years 2010–11 and 2013–14. Washington, DC: U.S. Department of Education. Retrieved on September 29, 2015 from: *http://eddataexpress.ed.gov/.*

[15] An Emerging Framework for Ending Unaccompanied Youth Homelessness (2012). Washington, DC: National Alliance to End Homelessness. Retrieved on June 7, 2015 from: *www.endhomelessness.org/library/entry/an-emerging-framework-for-ending-unaccompanied-youth-homelessness.*

[16] Moore, J. (Undated). Unaccompanied and Homeless Youth: Review of Literature (1995–2005). Washington, DC: National Center for Homeless Education. Retrieved on June 7, 2015 from: *http://center.serve.org/nche/downloads/uy_lit_review.pdf.*

ever been in foster care because these youth are at high risk for negative educational and employment outcomes. For example, youth who age out of the child welfare system are at particularly high risk for homelessness, with an estimated 11 to 37 percent experiencing homelessness, and 20 to 50 percent living in precarious housing situations.[17] Youth in foster care are less likely to graduate from high school than their peers, and those who do complete high school are less likely to enroll in postsecondary education than their peers.[18] As these youth transition out of foster care and enter adulthood, they often face long odds in the labor market. They tend to have greater difficulty finding employment and, when they are employed, tend to have lower earnings than youth in the general population. For example, one study that followed former foster youth as they aged from 18 to 24 years old in California, Minnesota, and North Carolina found that these youth were less likely to be employed and earned less than youth of similar ages nationwide, as well as in comparison with low-income youth in their respective states.[19]

*Proposed Priority*

To meet this priority, an applicant must propose a pilot that is designed to improve outcomes for disconnected youth who are or have ever been in foster care.

**Proposed Priority 9—Improving Outcomes for Youth Involved in the Justice System**

*Background*

In 2013, the Nation's juvenile courts processed more than one million cases of delinquency.[20] On any given day, more than 50,000 youth are incarcerated in residential facilities, including juvenile detention institutions and local and State correctional facilities.[21] Thousands more youth are incarcerated in local jails[22] and adult correctional facilities.[23] We propose establishing a priority for pilots that will serve disconnected youth involved in the justice system because these youth need sustained and comprehensive services and supports to facilitate their reentry into the community, to reduce their rate of recidivism, and to improve their educational and employment outcomes.[24]

*Proposed Priority*

To meet this priority, an applicant must propose a pilot that is designed to improve outcomes for disconnected youth who are involved in the justice system.

**Proposed Priority 10—Improving Outcomes for Youth Who are Immigrants or Refugees**

*Background*

We are proposing to establish a priority for projects that serve disconnected youth who are immigrants or refugees because of the great challenges these young people face in achieving civic, economic, and linguistic integration in the United States. More than one-third of immigrant youth ages 16 to 22 who are not enrolled in school lack a high school diploma. In contrast, 20 percent of nonimmigrant youth in this age group who are not enrolled in school do not have a high school diploma[25] Refugee youth often face significant educational challenges because they did not have the opportunity to enroll in school in their country of origin or because their formal schooling was interrupted by war, unrest, or migration.[26]

*Proposed Priority*

To meet this priority, an applicant must propose a pilot that is designed to improve outcomes for disconnected youth who are immigrants or refugees.

**Proposed Priority 11—Work-Based Learning Opportunities**

*Background*

We are proposing a priority for projects that provide disconnected youth with paid work-based learning opportunities because the employment rate among youth has declined precipitously over the last decade,[27] and addressing the employment needs of disconnected youth is critical to improving their well-being and preparation for lives as productive adults. We note as well that new evidence indicates that the benefits of work-based learning opportunities extend beyond improving the employment outcomes of youth. A recent evaluation of the summer work and learning opportunity program offered by New York City for youth ages 14 through 21, which selected participants using a randomized lottery, found that, within 5 to 8 years after participation, the incarceration and mortality rates of participants were significantly lower than those of their peers who were not selected to participate in the program.[28] Our proposed priority also includes academic and technical instruction because research suggests that work experience must be combined with academic and technical training, as well as job search and placement assistance and other supports, in order to have a positive impact on the employment and earnings outcomes of youth.[29]

*Proposed Priority*

To meet this priority, an applicant must propose a pilot that will provide disconnected youth with paid work-based learning opportunities, such as opportunities during the summer, which are integrated with academic and technical instruction.

**Proposed Priority 12—Site-Specific Evaluation**

*Background*

Though the Agencies are supporting a national evaluation of the implementation of P3, a great deal also

[17] Dion, R., Dworsky, A., Kauff, J., & Kleinman, R. (2014). Housing for youth aging out of foster care. Prepared for U.S. Department of Housing and Urban Development, Office of Policy Development and Research. Washington, DC. Retrieved August 30, 2015 from *http://www.huduser.org/portal/publications/pdf/youth_hsg_main_report.pdf.*

[18] See, for example, Frerer, K., Sosenko, L.D., and Henke, R.R. (2013). At Greater Risk: California Foster Youth and the Path from High School to College. San Francisco, CA: Stuart Foundation.

[19] Macomber, J., *et al.* (2008). Coming of Age: Employment Outcomes for Youth Who Age Out of Foster Care Through Their Middle Twenties. Washington, DC: Urban Institute.

[20] Sickmund, M., Sladky, A., and Kang, W. (2015). ''Easy Access to Juvenile Court Statistics: 1985–2013.'' Retrieved on June 7, 2015 from *www.ojjdp.gov/ojstatbb/ezajcs/.*

[21] Sickmund, M., Sladky, T.J., Kang, W., & Puzzanchera, C. (2015). ''Easy Access to the Census of Juveniles in Residential Placement.'' Retrieved on June 7, 2015 from *www.ojjdp.gov/ojstatbb/ezacjrp/.*

[22] Minton, T.D. and Zeng, Z. (2015). Jail Inmates at Midyear 2014. Washington, DC: Bureau of Justice Statistics, U.S. Department of Justice.

[23] West, H.C. (2010). Prison Inmates at Midyear 2009: Statistical Tables. Washington, DC: Bureau of Justice Statistics, U.S. Department of Justice.

[24] Seigle, E., Walsh, N. and Weber, J. (2014). Core Principles for Reducing Recidivism and Improving Other Outcomes for Youth in the Juvenile Justice System. New York: Council of State Governments Justice Center.

[25] Enchautegui, M.E. (2014) Immigrant Youth Outcomes: Patterns by Generation and Race and Ethnicity. Washington, DC: Urban Institute.

[26] Refugee Children and Youth Backgrounders (2006). New York, New York: International Rescue Committee.

[27] Sum, A. et al. (2014) The Plummeting Labor Market Fortunes of Teens and Young Adults. Washington, DC: The Brookings Institution.

[28] Gelber, A., Isen, A. and Kessler, J.B. (2014). The Effects of Youth Employment: Evidence from New York City Summer Youth Employment. Program Lotteries. NBER Working Paper No. 20810. Cambridge, MA: National Bureau of Economic Research.

[29] Sattar, S. (2010). Evidence Scan of Work Experience Programs. Oakland, CA: Mathematica Policy Research. See also Roder, A. and Elliott, M. (2014). Sustained Gains: Year-Up's Continued Impact on Young Adults' Earnings. New York, NY: Economic Mobility Corporation, Inc.

can be learned through rigorous and independent evaluations of the interventions and system reforms carried out by individual pilots. Consequently, we are proposing to establish a priority for applications that propose to conduct rigorous, independent evaluations of their programs or specific components of their programs. The November 2014 notice included two priorities, one for evaluations that employed a randomized controlled trial design and another for evaluations with a quasi-experimental design. In this notice, we are proposing to establish a single priority for projects that will support evaluations that use either a randomized controlled trial or a quasi-experimental design. Applications will be evaluated based on the quality and appropriateness of the proposed evaluation's design, the scale of the contribution the evaluation will make to the evidence base, and the applicant's expertise in planning and conducting comparable studies. As we did in the November 2014 notice, we propose to require that the evaluator be independent of the entities involved in implementing the pilot. This independence will help ensure the objectivity of the evaluation and will help to prevent even the appearance of a conflict of interest.

*Proposed Priority*

To meet this priority, an applicant must propose to conduct an independent evaluation of the impacts on disconnected youth of its overall program or specific components of its program that is a randomized controlled trial or a quasi-experimental design study. The extent to which an applicant meets this priority will be based on the clarity and feasibility of the applicant's proposed evaluation design, the appropriateness of the design to best capture key pilot outcomes, the prospective contribution of the evaluation to the knowledge base about serving disconnected youth (including the rigor of the design and the validity and generalizability of the findings), and the applicant's demonstrated expertise in planning and conducting a randomized controlled trial or quasi-experimental evaluation study.

In order to meet this priority, an applicant also must include the following two documents as separate attachments to its application:

1. A Summary Evaluation Plan that describes how the pilot or a component of the pilot (such as a discrete service-delivery strategy) will be rigorously evaluated. The evaluation plan may not exceed eight pages. The plan must include the following:

- A brief description of the research question(s) proposed for study and an explanation of its/their relevance, including how the proposed evaluation will build on the research evidence base for the project as described in the application and how the evaluation findings will be used to improve program implementation;
- A description of the randomized controlled trial or quasi-experimental design study methodology, including the key outcome measures, the process for forming a comparison or control group, a justification for the target sample size and strategy for achieving it, and the approach to data collection (and sources) that minimizes both cost and potential attrition;
- A proposed evaluation timeline, including dates for submission of required interim and final reports;
- A description of how, to the extent feasible and consistent with applicable Federal, State, local, and tribal privacy requirements, evaluation data will be made available to other, third-party researchers after the project ends; and
- A plan for selecting and procuring the services of a qualified independent evaluator (as defined in this notice) prior to enrolling participants (or a description of how one was selected if agreements have already been reached). The applicant must describe how it will ensure that the qualified independent evaluator has the capacity and expertise to conduct the evaluation, including estimating the effort for the qualified independent evaluator. This estimate must include the time, expertise, and analysis needed to successfully complete the proposed evaluation.

2. A supplementary Evaluation Budget Narrative, which is separate from the overall application budget narrative and provides a description of the costs associated with funding the proposed program evaluation component, and an explanation of its funding source—*i.e.,* blended funding, start-up funding, State, local, or tribal government funding, or other funding (such as philanthropic). The budget must include a breakout of costs by evaluation activity (such as data collection and participant follow-up), and the applicant must describe a strategy for refining the budget after the services of an evaluator have been procured. The applicant must include travel costs for the qualified independent evaluator to attend at least one in-person conference in Washington, DC during the period of evaluation. All costs included in this supplementary budget narrative must be reasonable and appropriate to the project timeline and deliverables.

The Agencies will review the Summary Evaluation Plans and Evaluation Budget Narratives and provide feedback to applicants that are determined to have met the priority and that are selected as pilot finalists or alternates. After award, these pilots must submit to the lead Federal agency a detailed evaluation plan of no more than 30 pages that relies heavily on the expertise of a qualified independent evaluator. The detailed evaluation plan must address the Agencies' feedback and expand on the Summary Evaluation Plan.

*Types of Priorities*

When inviting applications for a competition using one or more priorities, we designate the type of each priority as absolute, competitive preference, or invitational through a notice in the **Federal Register**. The effect of each type of priority follows:

*Absolute priority:* Under an absolute priority, we consider only applications that meet the priority (34 CFR 75.105(c)(3)).

*Competitive preference priority:* Under a competitive preference priority, we give competitive preference to an application by (1) awarding additional points, depending on the extent to which the application meets the priority (34 CFR 75.105(c)(2)(i)); or (2) selecting an application that meets the priority over an application of comparable merit that does not meet the priority (34 CFR 75.105(c)(2)(ii)).

*Invitational priority:* Under an invitational priority we are particularly interested in applications that meet the priority. However, we do not give an application that meets the priority a preference over other applications (34 CFR 75.105(c)(1)).

## PROPOSED REQUIREMENTS

### A. Application Requirements

*Background*

The purpose of these proposed requirements is to provide reviewers with sufficient information to evaluate applications based on the selection criteria, as well as to provide the Agencies with sufficient information to understand and assess the merits of the flexibilities sought by applicants.

*Proposed Application Requirements*

The Assistant Secretary proposes the following application requirements for this program. We may apply one or more of these requirements in any year in which this program is in effect.

a. *Executive Summary.* The applicant must provide an executive summary that briefly describes the proposed pilot, the flexibilities being sought, and the interventions or systems changes that would be implemented by the applicant and its partners to improve outcomes for disconnected youth.

b. *Statement of Need for a Defined Target Population.* The applicant must define the target population to be served, consistent with section 524 of the 2015 Appropriations Act and based on a needs assessment that was conducted or updated within the past three years using representative data on youth from the jurisdiction(s) proposing the pilot. The applicant must complete Table 1, specifying the target population(s) for the pilot, including the range of ages of youth who will be served and the number of youth who will be served annually.

TABLE 1—TARGET POPULATION

| Target population | Age range | Estimated number of youth served |
|---|---|---|
| | | |

*Note:* Applicants do not need to include a copy of the needs assessment with the application, but must identify when the needs assessment was conducted.

c. *Flexibility, including waivers:*

1. *Federal requests for flexibility, including waivers.* The applicant must identify two or more discretionary Federal programs that will be included in the pilot, at least one of which must be administered (in whole or in part) by a State, local, or tribal government.[30] The applicant must identify one or more program requirements that would inhibit implementation of the pilot and request that the requirement(s) be modified or waived. Examples of potential waiver requests and other requests for flexibility include, but are not limited to: blending of funds and changes to align eligibility requirements, allowable uses of funds, and performance reporting. For each program to be included in a pilot, the applicant also must complete Table 2, Requested Waivers.

TABLE 2—REQUESTED WAIVERS

| Program name | Federal agency | Program requirements to be waived or modified | Statutory or regulatory citation | Name of program grantee | Blending funds? (Yes/No) |
|---|---|---|---|---|---|
| | | | | | |

NOTE: Please note in "Name of Program Grantee" if the grantee is a State, local, or tribal government.

2. *Non-Federal flexibility, including waivers.* The applicant must provide written assurance that:

A. The State, local, or tribal government(s) with authority to grant any needed non-Federal flexibility, including waivers, has approved or will approve such flexibility within 60 days of an applicant's designation as a pilot finalist; [31] or

B. Non-Federal flexibility, including waivers, is not needed in order to successfully implement the pilot.

d. *Project Design.*

1. The applicant must submit a narrative that describes the project and includes an explanation of—

A. The needs of the target population;

B. The activities or changes in practice that will be implemented to improve outcomes for the target population and how these activities differ from the status quo;

C. Why the requested flexibility is necessary to implement the pilot and improve the outcomes of participants;

D. How the requested flexibility will enable the applicant to implement changes in practice to improve outcomes for the target population; and

E. The proposed length of the pilot.

2. The applicant must provide a graphic depiction (not longer than one page) of the pilot's logic model that illustrates the underlying theory of how the pilot's strategy will produce intended outcomes.

e. *Work Plan and Project Management.* The applicant must provide a detailed work plan that describes how the proposed work will be accomplished. The applicant must submit a detailed timeline and implementation milestones that include, at a minimum—

1. The number of days after award that pilot activities will start, which must be within 180 days of the award, such as participant intake and services or changes to administrative systems, practices, and policy; and

2. The number of participants expected to be served under the pilot for each period (such as quarterly or annually).

f. *Partnership Capacity and Management.* The applicant must—

1. Identify the proposed partners, including any and all State, local, and tribal entities and non-governmental organizations that would be involved in implementation of the pilot, and describe their roles in the pilot's implementation using Table 3. Partnerships that cross programs and funding sources but are under the jurisdiction of a single agency or entity must identify the different sub-organizational units involved.

2. Provide a memorandum of understanding or letter of commitment signed by the executive leader or other accountable senior representative of each partner that describes each proposed partner's commitment, including its contribution of financial or in-kind resources (if any).

[30] Local governments that are requesting waivers of requirements in State-administered programs are strongly encouraged to consult with the State agencies that administer the programs in preparing their applications.

[31] This includes, for example, for local governments, instances in which a waiver or modification must be agreed upon by a State. It also includes instances in which waivers or modifications may only be requested by the State on the local government's behalf, such as waivers of the performance accountability requirements for local areas established in Title I of the Workforce Innovation and Opportunity Act.

TABLE 3—PILOT PARTNERS

| Partner | Type of organization (state agency, local agency, community-based organization, business) | Description of partner's role in the pilot |
|---|---|---|
| | | |

*Note:* Any grantees mentioned in Table 2 that are not the lead applicant must be included in Table 3.

g. *Data and Performance Management Capacity.* The applicant must propose outcome measures and interim indicators to gauge pilot performance using Table 4. At least one outcome measure must be in the domain of education, and at least one outcome measure must be in the domain of employment. Applicants may specify additional employment and education outcome measures, as well as outcome measures in other domains of well-being, such as criminal justice, physical and mental health, and housing. Regardless of the outcome domain, applicants must identify at least one interim indicator for each proposed outcome measure. Applicants may apply one interim indicator to multiple outcome measures, if appropriate.

Examples of education- and employment-related outcome measures and interim indicators include:

- For the outcome measure High School Diploma Attainment, interim indicators could include high school enrollment, attendance, and grade promotion;
- For the outcome measure Community College Completion, interim indicators could include class attendance and credit accumulation; and
- For the outcome measure Sustained Employment in Career Field, interim indicators could include unsubsidized employment during the second quarter after exit from the program, unsubsidized employment during the fourth quarter after exit from the program, and median earnings during the second quarter after exit from the program.

The specific outcome measures and interim indicators the applicant uses should be grounded in its logic model, and informed by applicable program results or research, as appropriate. Applicants must also indicate the source of the data, the proposed frequency of collection, and the methodology used to collect the data.

TABLE 4—OUTCOME MEASURES AND INTERIM INDICATORS

| Domain | Outcome measure | Interim indicator(s) |
|---|---|---|
| Education | Data Source:<br>Frequency of Collection:<br>Methodology: | Data Source:<br>Frequency of Collection:<br>Methodology: |
| Employment | Data Source:<br>Frequency of Collection:<br>Methodology: | Data Source:<br>Frequency of Collection:<br>Methodology: |
| Other | Data Source:<br>Frequency of Collection:<br>Methodology: | Data Source:<br>Frequency of Collection:<br>Methodology: |

h. *Budget and Budget Narrative.*

1. The applicant must complete Table 5 to provide the following budget information:

A. For each Federal program, the amount of funds to be blended or braided (as defined in this notice), and the percentage of total program funding received by the applicant or its partners that the amount to be blended or braided represents; and

B. The total amount of funds from all Federal programs that would be blended or braided under the pilot.

TABLE 5—FEDERAL FUNDS

| Year | Program name | Amount of funds to be blended | Blended funds as a percentage of grantee's total award | Federal fiscal year of award | Grant already awarded? (Y/N) |
|---|---|---|---|---|---|
| **Funds to be Blended** | | | | | |
| Year 1<br>Year 2<br>Year 3 | | | | | |
| **Funds to be Braided** | | | | | |
| Year 1<br>Year 2<br>Year 3 | | | | | |

**Note:** Applicants may propose to expand the number of Federal programs supporting pilot activities using FY 2016 or other future funding, which may be included in pilots if Congress extends the P3 authority. If an applicant intends to blend or braid multiple years of a program's funds, it must complete a separate row of the table for each fiscal year. If an applicant will use a program's funding over multiple years of the pilot, it must indicate the amounts to be used in each separate year using the Year 1, 2, and 3 rows.

2. The applicant must provide the following information about the proposed uses of funds to implement the pilot—

A. The amount and proposed uses of the start-up grant funds it is requesting (which must be within the estimated award range provided in the notice inviting applications);

B. The proposed uses of the blended and braided funds identified in Table 5; and

C. The amount and sources of any non-Federal resources, including funds and in-kind contributions from State, local, tribal, philanthropic, and other sources, that will be used for the pilot.

B. Program Requirements

*Background*

We are proposing program requirements for each partnership selected as a pilot in order to ensure that each pilot participates in the national P3 evaluation and a technical assistance community of practice (as defined in this notice), as well as secures necessary consent for any data-sharing it carries out. We also specify the proposed contents of the performance agreement that will be established with each pilot. These proposed program requirements are the same requirements we established in the November 2014 notice.

*Proposed Program Requirements*

The Assistant Secretary proposes the following program requirements for this program. We may apply one or more of these requirements in any year in which this program is in effect.

a. *National evaluation.* In addition to any site-specific evaluations that pilots may undertake, the Agencies have initiated a national P3 evaluation. Each P3 pilot must participate fully in any federally sponsored P3 evaluation activity, including the national evaluation of P3, which will consist of the analysis of participant characteristics and outcomes, an implementation analysis at all sites, and rigorous impact evaluations of promising interventions in selected sites. The applicant must acknowledge in writing its understanding of these requirements by submitting the form provided in Appendix A, ''Evaluation Commitment Form,'' as an attachment to its application.

b. *Community of practice.* All P3 pilots must participate in a community of practice (as defined in this notice) that includes an annual in-person meeting of pilot sites (paid with grant funding that must be reflected in the pilot budget submitted) and virtual peer-to-peer learning activities. This commitment involves each pilot site working with the lead Federal agency on a plan for supporting its technical assistance needs, which can include learning activities supported by foundations or other non-Federal organizations as well as activities financed with Federal funds for the pilot.

c. *Consent.* P3 pilots must secure necessary consent from parents, guardians, students, or youth program participants to access data for their pilots and any evaluations, in accordance with applicable Federal, State, local, and tribal laws. Applicants must explain how they propose to ensure compliance with Federal, State, local, and tribal privacy laws and regulations as pilot partners share data to support effective coordination of services and link data to track outcome measures and interim indicators at the individual level to perform, where applicable, a low-cost, high-quality evaluation.[32]

d. *Performance agreement.* Each P3 pilot, along with other non-Federal government entities involved in the partnership, must enter into a performance agreement that will include, at a minimum, the following (as required by section 526(c)(2) of the 2014 Appropriations Act):

1. The length of the agreement;

2. The Federal programs and federally-funded services that are involved in the pilot;

3. The Federal discretionary funds that are being used in the pilot;

4. The non-Federal funds that are involved in the pilot, by source (which may include private funds as well as governmental funds) and by amount;

5. The State, local, or tribal programs that are involved in the pilot and their respective roles;

6. The populations to be served by the pilot;

7. The cost-effective Federal oversight procedures that will be used for the purpose of maintaining the necessary level of accountability for the use of the Federal discretionary funds;

8. The cost-effective State, local, or tribal oversight procedures that will be used for the purpose of maintaining the necessary level of accountability for the use of the Federal discretionary funds;

9. The outcome (or outcomes) that the pilot is designed to achieve;

10. The appropriate, reliable, and objective outcome-measurement methodology that will be used to determine whether the pilot is achieving, and has achieved, specified outcomes;

11. The statutory, regulatory, or administrative requirements related to Federal mandatory programs that are barriers to achieving improved outcomes of the pilot; and

12. Criteria for determining when a pilot is not achieving the specified outcomes that it is designed to achieve and subsequent steps, including:

i. The consequences that will result; and

ii. The corrective actions that will be taken in order to increase the likelihood that the pilot will achieve such specified outcomes.

**PROPOSED DEFINITIONS**

*Background*

We propose definitions for several important terms that are associated with this program and the proposed priorities, requirements, and selection criteria in this notice.

*Proposed Definitions*

The Assistant Secretary proposes the following definitions for this program. We may apply one or more of these definitions in any year in which this program is in effect.

*Blended funding* is a funding and resource allocation strategy that uses multiple existing funding streams to support a single initiative or strategy. Blended funding merges two or more funding streams, or portions of multiple funding streams, to produce greater efficiency and/or effectiveness. Funds from each individual stream lose their award-specific identity, and the blended funds together become subject to a single set of reporting and other requirements, consistent with the underlying purposes of the programs for which the funds were appropriated.

*Braided funding* is a funding and resource allocation strategy in which entities use existing funding streams to support unified initiatives in as flexible and integrated a manner as possible while still tracking and maintaining separate accountability for each funding stream. One or more entities may coordinate several funding sources, but each individual funding stream

[32] To the extent feasible and consistent with applicable privacy requirements, grantees must also ensure the data from their evaluations are made available to third-party researchers.

maintains its award-specific identity. Blending funds typically requires one or more waivers of associated program requirements, whereas braiding funding does not.

*Community of practice* means a group of pilots that agrees to interact regularly to solve persistent problems or improve practice in an area that is important to them and the success of their projects.

*English learner* means an individual who has limited ability in reading, writing, speaking, or comprehending the English language, and—

(A) Whose native language is a language other than English; or

(B) Who lives in a family or community environment where a language other than English is the dominant language.

*Evidence-based interventions* are approaches to prevention or treatment that are validated by documented scientific evidence from randomized controlled trials, or quasi-experimental or correlational studies, and that show positive effects (for randomized controlled trials and quasi-experimental studies) or favorable associations (for correlational studies) on the primary targeted outcomes for populations or settings similar to those of the proposed pilot. The best evidence to support an applicant's proposed reform(s) and target population will be based on one or more randomized controlled trials. The next best evidence will be studies using a quasi-experimental design. Correlational analysis may also be used as evidence to support an applicant's proposed reforms.

*Evidence-informed interventions* bring together the best available research, professional expertise, and input from youth and families to identify and deliver services that have promise to achieve positive outcomes for youth, families, and communities.

*Homeless youth* has the same meaning as ''homeless children and youths'' in section 725(2) of the McKinney-Vento Education for Homeless Children and Youth Act of 2001 (42 U.S.C. 11434a(2)).

*Individual with a disability* means an individual with any disability as defined in section 3 of the Americans with Disabilities Act of 1990 (42 U.S.C. 12102).

An *interim indicator* is a marker of achievement that demonstrates progress toward an outcome and is measured at least annually.

*Outcomes* are the intended results of a program, or intervention. They are what applicants expect their projects to achieve. An outcome can be measured at the participant level (for example, changes in employment retention or earnings of disconnected youth) or at the system level (for example, improved efficiency in program operations or administration).

A *qualified independent evaluator* is an individual who coordinates with the grantee and the lead Federal agency for the pilot, but works independently on the evaluation and has the capacity to carry out the evaluation, including, but not limited to: Prior experience conducting evaluations of similar design (for example, for randomized controlled trials, the evaluator will have successfully conducted a randomized controlled trial in the past); positive past performance on evaluations of a similar design, as evidenced by past performance reviews submitted from past clients directly to the awardee; lead staff with prior experience carrying out a similar evaluation; lead staff with minimum credential (such as a Ph.D. plus three years of experience conducting evaluations of a similar nature, or a Master's degree plus seven years of experience conducting evaluations of a similar nature); and adequate staff time to work on the evaluation.

A *rural community* is a community that is served only by one or more local educational agencies (LEAs) that are currently eligible under the Department of Education's Small, Rural School Achievement (SRSA) program or the Rural and Low-Income School (RLIS) program authorized under Title VI, Part B of the Elementary and Secondary Education Act of 1965 (ESEA), as amended, or includes only schools designated by the National Center for Education Statistics (NCES) with a locale code of 42 or 43.

A *waiver* provides flexibility in the form of relief from specific statutory, regulatory, or administrative requirements that have hindered the ability of a State, locality, or tribe to organize its programs and systems or provide services in ways that best meet the needs of its target populations. Under P3, waivers provide flexibility in exchange for a pilot's commitment to improve programmatic outcomes for disconnected youth consistent with underlying statutory authorities and purposes.

## PROPOSED SELECTION CRITERIA

### *Background*

We propose to establish program-specific selection criteria for P3 because we believe the use of the more general selection criteria in the Education Department General Administrative Regulations would not result in the identification of projects that address the most compelling needs and are most likely to be successful in improving significantly the outcomes of disconnected youth. The selection criteria we are proposing are based largely on the selection criteria that appeared in the November 2014 notice. However, based on our experience in using these criteria, as well as feedback from prospective applicants and reviewers, we are proposing to simplify and streamline many of the criteria from the November 2014 notice. For example, the selection criteria for Work Plan and Project Management included nine elements in the November 2014 notice; the comparable proposed selection criteria in this notice include only three elements.

### *Proposed Selection Criteria*

The Assistant Secretary proposes the following selection criteria for evaluating an application under this program. We may apply one or more of these criteria in any year in which this program is in effect. In the notice inviting applications, the application package, or both we will announce the maximum possible points assigned to each criterion.

a. *Need for Project.* In determining the need for the proposed project, we will consider the magnitude of the need of the target population, as evidenced by the applicant's analysis of data, including data from the comprehensive needs assessment, that demonstrates how the target population lags behind other groups in achieving positive outcomes and the specific risk factors for this population.

**Note:** Applicants are encouraged to disaggregate these data according to relevant demographic factors such as race, ethnicity, gender, age, disability status, involvement in systems such as foster care or juvenile justice, status as pregnant or parenting, and other key factors selected by the applicant.

b. *Need for Requested Flexibility, Including Blending of Funds and Other Waivers.* In determining the need for the requested flexibility, including blending of funds and other waivers, we will consider:

1. The strength and clarity of the applicant's justification that each of the specified Federal requirements for which the applicant is seeking a waiver hinders implementation of the proposed pilot; and

2. The strength and quality of the applicant's justification of how each request for flexibility (*i.e.,* blending funds and waivers) will increase efficiency or access to services and produce significantly better outcomes for the target population(s).

c. *Project Design.* In determining the strength of the project design, we will consider:

1. The strength and logic of the proposed project design in addressing the gaps and the disparities identified in the statement of need section and the barriers identified in the flexibility section. This includes the clarity of the applicant's plan and how the plan differs from current practices. Scoring will account for the strength of both the applicant's narrative and the logic model;

**Note:** The applicant's narrative should describe how the proposed project will use and coordinate resources, including building on participation in any complementary Federal initiatives or efforts.

2. The strength of the evidence base supporting the pilot design, based on the use of evidence-based and evidence-informed interventions (as defined in this notice) as documented by citations to the relevant evidence;

**Note:** Applicants should cite the studies on interventions and system reforms that informed their pilot design and explain the relevance of the cited evidence to the proposed project in terms of subject matter and evaluation evidence. Applicants proposing reforms on which there are not yet evaluations (such as innovations that have not been formally tested or tested only on a small scale) should document how evidence or practice knowledge informed the proposed pilot design.

3. The strength of the applicant's evidence that the project design, including any protections and safeguards that will be established, ensures that the consequences or impacts of the changes from current practices in serving youth through the proposed funding streams:

A. Will not result in denying or restricting the eligibility of individuals for services that (in whole or in part) are otherwise funded by these programs; and

B. Based on the best available information, will not otherwise adversely affect vulnerable populations that are the recipients of those services.

d. *Work Plan and Project Management.* In determining the strength of the work plan and project management, we will consider the strength and completeness of the work plan and project management approach and their likelihood of achieving the objectives of the proposed project on time and within budget, based on—

1. Clearly defined and appropriate responsibilities, timelines, and milestones for accomplishing project tasks;

2. The qualifications of project personnel to ensure proper management of all project activities;

3. How any existing or anticipated barriers to implementation will be overcome.

**Note:** If the program manager or other key personnel are already on staff, the applicant should provide this person's resume or curriculum vitae.

**Note:** Evaluation activities may be included in the timelines provided as part of the work plan.

e. *Partnership Capacity.* In determining the strength and capacity of the proposed pilot partnership, we will consider the following factors—

1. How well the applicant demonstrates that it has an effective governance structure in which partners that are necessary to implement the pilot successfully are represented and have the necessary authority, resources, expertise, and incentives to achieve the pilot's goals and resolve unforeseen issues, including by demonstrating the extent to which, and how, participating partners have successfully collaborated to improve outcomes for disconnected youth in the past;

2. How well the applicant demonstrates that its proposal was designed with substantive input from all relevant stakeholders, including disconnected youth and other community partners.

**Note:** Where the project design includes job training strategies, the extent of employer input and engagement in the identification of skills and competencies needed by employers, the development of the curriculum, and the offering of work-based learning opportunities, including pre-apprenticeship and registered apprenticeship, will be considered.

f. *Data and Performance Management Capacity.* In determining the strength of the applicant's data and performance management capacity, we will consider the following factors—

1. The applicant's capacity to collect, analyze, and use data for decision-making, learning, continuous improvement, and accountability, and the strength of the applicant's plan to bridge any gaps in its ability to do so. This capacity includes the extent to which the applicant and partner organizations have tracked and shared data about program participants, services, and outcomes, including the execution of data-sharing agreements that comport with Federal, State, and other privacy laws and requirements, and will continue to do so;

2. How well the proposed outcome measures, interim indicators, and measurement methodologies specified in the application appropriately and sufficiently gauge results achieved for the target population under the pilot; and

3. How well the data sources specified in the application can be appropriately accessed and used to reliably measure the proposed outcome measures and interim indicators.

g. *Budget and Budget Narrative.* In determining the adequacy of the resources that will be committed to support the project, we will consider the appropriateness of expenses within the budget with regards to cost and to implementing the pilot successfully.

*Final Priorities, Requirements, Definitions, and Selection Criteria*

We will announce the final priorities, requirements, definitions, and selection criteria in a notice in the **Federal Register**. We will determine the final priorities, requirements, definitions, and selection criteria after considering responses to this notice and other information available to the Department. This notice does not preclude us from proposing additional priorities, requirements, definitions, or selection criteria, subject to meeting applicable rulemaking requirements.

**Note:** This notice does *not* solicit applications. In any year in which we choose to use one or more of these proposed priorities, requirements, definitions, and selection criteria, we invite applications through a notice in the **Federal Register**.

## Executive Orders 12866 and 13563

*Regulatory Impact Analysis*

Under Executive Order 12866, the Secretary must determine whether this regulatory action is ''significant'' and, therefore, subject to the requirements of the Executive order and subject to review by the Office of Management and Budget (OMB). Section 3(f) of Executive Order 12866 defines a ''significant regulatory action'' as an action likely to result in a rule that may—

(1) Have an annual effect on the economy of $100 million or more, or adversely affect a sector of the economy, productivity, competition, jobs, the environment, public health or safety, or State, local or tribal governments or communities in a material way (also referred to as an ''economically significant'' rule);

(2) Create serious inconsistency or otherwise interfere with an action taken or planned by another agency;

(3) Materially alter the budgetary impacts of entitlement grants, user fees, or loan programs or the rights and obligations of recipients thereof; or

(4) Raise novel legal or policy issues arising out of legal mandates, the

President's priorities, or the principles stated in the Executive order.

This proposed regulatory action is not a significant regulatory action subject to review by OMB under section 3(f) of Executive Order 12866.

We have also reviewed this proposed regulatory action under Executive Order 13563, which supplements and explicitly reaffirms the principles, structures, and definitions governing regulatory review established in Executive Order 12866. To the extent permitted by law, Executive Order 13563 requires that an agency—

(1) Propose or adopt regulations only upon a reasoned determination that their benefits justify their costs (recognizing that some benefits and costs are difficult to quantify);

(2) Tailor its regulations to impose the least burden on society, consistent with obtaining regulatory objectives and taking into account—among other things and to the extent practicable—the costs of cumulative regulations;

(3) In choosing among alternative regulatory approaches, select those approaches that maximize net benefits (including potential economic, environmental, public health and safety, and other advantages; distributive impacts; and equity);

(4) To the extent feasible, specify performance objectives, rather than the behavior or manner of compliance a regulated entity must adopt; and

(5) Identify and assess available alternatives to direct regulation, including economic incentives—such as user fees or marketable permits—to encourage the desired behavior, or provide information that enables the public to make choices.

Executive Order 13563 also requires an agency ''to use the best available techniques to quantify anticipated present and future benefits and costs as accurately as possible.'' The Office of Information and Regulatory Affairs of OMB has emphasized that these techniques may include ''identifying changing future compliance costs that might result from technological innovation or anticipated behavioral changes.''

We are issuing these proposed priorities requirements, definitions, and selection criteria only on a reasoned determination that their benefits would justify their costs. In choosing among alternative regulatory approaches, we selected those approaches that would maximize net benefits. Based on the analysis that follows, the Department believes that this regulatory action is consistent with the principles in Executive Order 13563.

We also have determined that this regulatory action would not unduly interfere with State, local, and tribal governments in the exercise of their governmental functions.

In accordance with both Executive orders, the Department has assessed the potential costs and benefits, both quantitative and qualitative, of this regulatory action. The potential costs are those resulting from statutory requirements and those we have determined as necessary for administering the Department's programs and activities. The potential benefits of the proposed priorities requirements, definitions, and selection criteria are that they would promote the efficient and effective use of the P3 authority. Implementation of these priorities, requirements, definitions, and selection criteria will help the Agencies identify pilots that will: (1) Serve disconnected youth with significant needs; (2) carry out effective reforms and interventions; and (3) be managed by strong partnerships with the capacity to collect, analyze, and use data for decision-making, learning, continuous improvement, and accountability.

**Paperwork Reduction Act of 1995**

As part of its continuing effort to reduce paperwork and respondent burden, the Department provides the general public and Federal agencies with an opportunity to comment on proposed and continuing collections of information in accordance with the Paperwork Reduction Act of 1995 (PRA) (44 U.S.C. 3506(c)(2)(A)). This helps ensure that: The public understands the Department's collection instructions, respondents can provide the requested data in the desired format, reporting burden (time and financial resources) is minimized, collection instruments are clearly understood, and the Department can properly assess the impact of collection requirements on respondents.

We estimate that each applicant would spend approximately 80 hours of staff time to address the proposed priorities, requirements, definitions, and selection criteria, prepare the application, and obtain necessary clearances. The total number of hours for all applicants will vary based on the number of applications. Based on the number of applications the Department received in response to the November 2014 notice inviting applications, we expect to receive approximately 55 applications. The total number of hours for all expected applicants is an estimated 4,400 hours. We estimate the total cost per hour of the staff who carry out this work to be $44.25 per hour, the mean hourly compensation cost for State and local government workers in March 2015.[33] The total estimated cost for all applicants would be $194,700.

We have prepared an Information Collection Request (ICR) for this collection (1830–0575). If you want to review and comment on the ICR, please follow the instructions listed under the **ADDRESSES** section of this notice.

**Note:** The Office of Information and Regulatory Affairs in OMB and the Department of Education review all comments posted at *www.regulations.gov.*

In preparing your comments you may want to review the ICR, including the supporting materials, in *www.regulations.gov* by using the Docket ID number specified in this notice. This proposed collection is identified as proposed collection 1830–0575.

We consider your comments on this proposed collection of information in—

- Deciding whether the proposed collection is necessary for the proper performance of our functions, including whether the information will have practical use;
- Evaluating the accuracy of our estimate of the burden of the proposed collection, including the validity of our methodology and assumptions;
- Enhancing the quality, usefulness, and clarity of the information we collect; and
- Minimizing the burden on those who must respond. This includes exploring the use of appropriate automated, electronic, mechanical, or other technological collection techniques.

Between 30 and 60 days after publication of this document in the **Federal Register**, OMB is required to make a decision concerning the collection of information contained in these proposed priorities, requirements, definitions, and selection criteria. Therefore, to ensure that OMB gives your comments full consideration, it is important that OMB receives your comments on this ICR by November 23, 2015. This does not affect the deadline for your comments to us on the proposed priorities, requirements, definitions, and selection criteria.

If your comments relate to the ICR for these proposed priorities, requirements, definitions, and selection criteria, please specify the Docket ID number and indicate ''Information Collection Comments'' on the top of your comments.

[33] Employer Costs for Employee Compensation, March 2015 (2015). Washington, DC: Bureau of Labor Statistics, U.S. Department of Labor. Retrieved on August 30, 2015 from: *http://www.bls.gov/news.release/pdf/ecec.pdf.*

Written requests for information or comments submitted by postal mail or delivery related to the information collection requirements should be addressed to the Director of the Information Collection Clearance Division, U.S. Department of Education, 400 Maryland Avenue SW., Mailstop L–OM–2E319LBJ, Room 2E115, Washington, DC 20202–4537.

*Intergovernmental Review:* This program is subject to Executive Order 12372 and the regulations in 34 CFR part 79. One of the objectives of the Executive order is to foster an intergovernmental partnership and a strengthened federalism. The Executive order relies on processes developed by State and local governments for coordination and review of proposed Federal financial assistance.

This document provides early notification of our specific plans and actions for this program.

*Accessible Format:* Individuals with disabilities can obtain this document in an accessible format (*e.g.,* braille, large print, audiotape, or compact disc) on request to the contact person listed under **FOR FURTHER INFORMATION CONTACT**.

*Electronic Access to This Document:* The official version of this document is the document published in the **Federal Register**. Free Internet access to the official edition of the **Federal Register** and the Code of Federal Regulations is available via the Federal Digital System at: *www.gpo.gov/fdsys.* At this site you can view this document, as well as all other documents of this Department published in the **Federal Register**, in text or Adobe Portable Document Format (PDF). To use PDF you must have Adobe Acrobat Reader, which is available free at the site. You may also access documents of the Department published in the **Federal Register** by using the article search feature at: *www.federalregister.gov.* Specifically, through the advanced search feature at this site, you can limit your search to documents published by the Department.

Dated: October 19, 2015.

**Johan E. Uvin,**

*Deputy Assistant Secretary, Delegated the Authority of Assistant Secretary for Career, Technical, and Adult Education.*

## Appendix A: Proposed Evaluation Commitment Form

An authorized executive of the lead applicant and all other partners, including State, local, tribal, and non-governmental organizations that would be involved in the pilot's implementation, must sign this form and submit it as an attachment to the grant application. The form is not considered in the recommended application page limit.

### Commitment To Participate in Required Evaluation Activities

As the lead applicant or a partner proposing to implement a Performance Partnership Pilot through a Federal grant, I/we agree to carry out the following activities, which are considered evaluation requirements applicable to all pilots:

*Facilitate Data Collection:* I/we understand that the award of this grant requires me/us to facilitate the collection and/or transmission of data for evaluation and performance monitoring purposes to the lead Federal agency and/or its national evaluator in accordance with applicable Federal, State, and local, and tribal laws, including privacy laws.

The type of data that will be collected includes, but is not limited to, the following:

- Demographic information, including participants' gender, race, age, school status, and employment status;
- Information on the services that participants receive; and
- Outcome measures and interim outcome indicators, linked at the individual level, which will be used to measure the effects of the pilots.

The lead Federal agency will provide more details to grantees on the data items required for performance and evaluation after grants have been awarded.

*Participate in Evaluation:* I/we understand that participation and full cooperation in the national evaluation of the Performance Partnership Pilot is a condition of this grant award. I/we understand that the national evaluation will include an implementation systems analysis and, for certain sites as appropriate, may also include an impact evaluation. My/our participation will include facilitating site visits and interviews; collaborating in study procedures, including random assignment, if necessary; and transmitting data that are needed for the evaluation of participants in the study sample, including those who may be in a control group.

*Participate in Random Assignment:* I/we agree that if our Performance Partnership Pilot or certain activities in the Pilot is selected for an impact evaluation as part of the national evaluation, it may be necessary to select participants for admission to Performance Partnership Pilot by a random lottery, using procedures established by the qualified independent evaluator.

*Secure Consent:* I/we agree to include a consent form for, as appropriate, parents/guardians and students/participants in the application or enrollment packet for all youth in organizations implementing the Performance Partnership Pilot consistent with any Federal, State, local, and tribal laws that apply. The parental/participant consent forms will be collected prior to the acceptance of participants into Performance Partnership Pilot and before sharing data with the qualified independent evaluator for the purpose of evaluating the Performance Partnership Pilot.

### SIGNATURES

Lead Applicant

Print Name _____
Signature _____
Organization _____
Date _____

Partner

Print Name _____
Signature _____
Organization _____
Date _____

Partner

Print Name _____
Signature _____
Organization _____
Date _____

Partner

Print Name _____
Signature _____
Organization _____
Date _____

Partner

Print Name _____
Signature _____
Organization _____
Date _____

Partner

Print Name _____
Signature _____
Organization _____
Date _____

[FR Doc. 2015–26965 Filed 10–21–15; 8:45 am]

BILLING CODE 4000–01–P

## DEPARTMENT OF EDUCATION

**[Docket No.: ED–2015–ICCD–0121]**

### Agency Information Collection Activities; Submission to the Office of Management and Budget for Review and Approval; Comment Request; Application for Grants Under the Educational Opportunity Centers Program (1894–0001)

**AGENCY:** Office of Postsecondary Education (OPE), Department of Education (ED).

**ACTION:** Notice.

**SUMMARY:** In accordance with the Paperwork Reduction Act of 1995 (44 U.S.C. chapter 3501 *et seq.*), ED is proposing a reinstatement of a previously approved information collection.

**DATES:** Interested persons are invited to submit comments on or before November 23, 2015.

**ADDRESSES:** To access and review all the documents related to the information collection listed in this notice, please use *http://www.regulations.gov* by searching the Docket ID number ED–2015–ICCD–0121. Comments submitted in response to this notice should be submitted electronically through the Federal eRulemaking Portal at *http://www.regulations.gov* by selecting the Docket ID number or via postal mail, commercial delivery, or hand delivery. *Please note that comments submitted by fax or email and those submitted after the comment period will not be accepted.* Written requests for information or comments submitted by postal mail or delivery should be addressed to the Director of the Information Collection Clearance Division, U.S. Department of Education, 400 Maryland Avenue SW., LBJ, Room 2E103, Washington, DC 20202–4537.

**FOR FURTHER INFORMATION CONTACT:** For specific questions related to collection activities, please contact Rachel Couch, (202) 502–7655.

**SUPPLEMENTARY INFORMATION:** The Department of Education (ED), in accordance with the Paperwork Reduction Act of 1995 (PRA) (44 U.S.C. 3506(c)(2)(A)), provides the general public and Federal agencies with an opportunity to comment on proposed, revised, and continuing collections of information. This helps the Department assess the impact of its information collection requirements and minimize the public's reporting burden. It also helps the public understand the Department's information collection requirements and provide the requested data in the desired format. ED is soliciting comments on the proposed information collection request (ICR) that is described below. The Department of Education is especially interested in public comment addressing the following issues: (1) Is this collection necessary to the proper functions of the Department; (2) will this information be processed and used in a timely manner; (3) is the estimate of burden accurate; (4) how might the Department enhance the quality, utility, and clarity of the information to be collected; and (5) how might the Department minimize the burden of this collection on the respondents, including through the use of information technology. Please note that written comments received in response to this notice will be considered public records.

*Title of Collection:* Application for Grants under the Educational Opportunity Centers Program (1894–0001).

*OMB Control Number:* 1840–0820.

*Type of Review:* A reinstatement of a previously approved information collection.

*Respondents/Affected Public:* Private Sector, State, Local and Tribal Governments.

*Total Estimated Number of Annual Responses:* 400.

*Total Estimated Number of Annual Burden Hours:* 10,020.

*Abstract:* The Department of Education is requesting a reinstatement with change of the application for grants under the Educational Opportunity Centers (EOC) Program. The Department is requesting a reinstatement with change because the previous EOC application expired in March 2014 and the application will be needed for a Fiscal Year (FY) 2016 competition for new awards. The FY 2016 application incorporates new competitive preference priorities and removes the previously-used invitational priorities.

Dated: October 19, 2015.

**Kate Mullan,**

*Acting Director, Information Collection Clearance Division, Office of the Chief Privacy Officer, Office of Management.*

[FR Doc. 2015–26831 Filed 10–21–15; 8:45 am]

**BILLING CODE 4000–01–P**

## DEPARTMENT OF ENERGY

### Environmental Management Site-Specific Advisory Board, Paducah Meeting

**AGENCY:** Department of Energy (DOE).

**ACTION:** Notice of open meeting.

**SUMMARY:** This notice announces a meeting of the Environmental Management Site-Specific Advisory Board (EM SSAB), Paducah. The Federal Advisory Committee Act (Pub. L. 92–463, 86 Stat. 770) requires that public notice of this meeting be announced in the **Federal Register**.

**DATES:** Thursday, November 19, 2015, 6:00 p.m.

**ADDRESSES:** Barkley Centre, 111 Memorial Drive, Paducah, Kentucky 42001.

**FOR FURTHER INFORMATION CONTACT:** Jennifer Woodard, Deputy Designated Federal Officer, Department of Energy Paducah Site Office, Post Office Box 1410, MS–103, Paducah, Kentucky 42001, (270) 441–6825.

**SUPPLEMENTARY INFORMATION:**

*Purpose of the Board:* The purpose of the Board is to make recommendations to DOE–EM and site management in the areas of environmental restoration, waste management and related activities.

*Tentative Agenda:*

- Call to Order, Introductions, Review of Agenda
- Administrative Issues
- Public Comments (15 minutes)
- Adjourn

**Breaks Taken as Appropriate**

*Public Participation:* The EM SSAB, Paducah, welcomes the attendance of the public at its advisory committee meetings and will make every effort to accommodate persons with physical disabilities or special needs. If you require special accommodations due to a disability, please contact Jennifer Woodard as soon as possible in advance of the meeting at the telephone number listed above. Written statements may be filed with the Board either before or after the meeting. Individuals who wish to make oral statements pertaining to agenda items should contact Jennifer Woodard at the telephone number listed above. Requests must be received as soon as possible prior to the meeting and reasonable provision will be made to include the presentation in the agenda. The Deputy Designated Federal Officer is empowered to conduct the meeting in a fashion that will facilitate the orderly conduct of business. Individuals wishing to make public comments will be provided a maximum of five minutes to present their comments. The EM SSAB, Paducah, will hear public comments pertaining to its scope (clean-up standards and environmental restoration; waste management and disposition; stabilization and disposition of non-stockpile nuclear materials; excess facilities; future land use and long-term stewardship; risk assessment and

management; and clean-up science and technology activities). Comments outside of the scope may be submitted via written statement as directed above.

*Minutes:* Minutes will be available by writing or calling Jennifer Woodard at the address and phone number listed above. Minutes will also be available at the following Web site: *http://www.pgdpcab.energy.gov/2015Meetings.html.*

Issued at Washington, DC, on October 19, 2015.

**LaTanya R. Butler,**

*Deputy Committee Management Officer.*

[FR Doc. 2015–26852 Filed 10–21–15; 8:45 am]

BILLING CODE 6450–01–P

## DEPARTMENT OF ENERGY

### Environmental Management Site-Specific Advisory Board, Nevada Meeting

**AGENCY:** Department of Energy.

**ACTION:** Notice of open meeting.

**SUMMARY:** This notice announces a meeting of the Environmental Management Site-Specific Advisory Board (EM SSAB), Nevada. The Federal Advisory Committee Act (Pub. L. 92–463, 86 Stat. 770) requires that public notice of this meeting be announced in the **Federal Register**.

**DATES:** Tuesday, November 10, 2015, 5:00 p.m.

**ADDRESSES:** National Atomic Testing Museum, 755 East Flamingo, Las Vegas, Nevada 89159.

**FOR FURTHER INFORMATION CONTACT:** Barbara Ulmer, Board Administrator, 232 Energy Way, M/S 505, North Las Vegas, Nevada 89030. Phone: (702) 630–0522; Fax (702) 295–5300 or Email: *NSSAB@nnsa.doe.gov*.

**SUPPLEMENTARY INFORMATION:**

*Purpose of the Board:* The purpose of the Board is to make recommendations to DOE–EM and site management in the areas of environmental restoration, waste management, and related activities.

*Tentative Agenda:*

- Open Meeting and Announcements
- Chair's Opening Remarks
- Public Comment
- DOE Presentations on Board Work Plan Items
- Liaison Updates
- Other Board Business and Recommendation(s) Development
- Meeting Wrap-up, Assessment and Adjournment

*Public Participation:* The EM SSAB, Nevada, welcomes the attendance of the public at its advisory committee meetings and will make every effort to accommodate persons with physical disabilities or special needs. If you require special accommodations due to a disability, please contact Barbara Ulmer at least seven days in advance of the meeting at the phone number listed above. Written statements may be filed with the Board either before or after the meeting. Individuals who wish to make oral presentations pertaining to agenda items should contact Barbara Ulmer at the telephone number listed above. The request must be received five days prior to the meeting and reasonable provision will be made to include the presentation in the agenda. The Deputy Designated Federal Officer is empowered to conduct the meeting in a fashion that will facilitate the orderly conduct of business. Individuals wishing to make public comments can do so during the 15 minutes allotted for public comments.

*Minutes:* Minutes will be available by writing to Barbara Ulmer at the address listed above or at the following Web site: *http://nv.energy.gov/nssab/MeetingMinutes.aspx*

Issued at Washington, DC on October 16, 2015.

**LaTanya R. Butler,**

*Deputy Committee Management Officer.*

[FR Doc. 2015–26855 Filed 10–21–15; 8:45 am]

BILLING CODE 6450–01–P

## DEPARTMENT OF ENERGY

### Environmental Management Site-Specific Advisory Board, Savannah River Site Meeting

**AGENCY:** Department of Energy.

**ACTION:** Notice of open meeting.

**SUMMARY:** This notice announces a meeting of the Environmental Management Site-Specific Advisory Board (EM SSAB), Savannah River Site. The Federal Advisory Committee Act (Pub. L. 92–463, 86 Stat. 770) requires that public notice of this meeting be announced in the **Federal Register**.

**DATES:**

Monday, November 16, 2015, 1:00 p.m.–5:30 p.m.

Tuesday, November 17, 2015, 8:30 a.m.–4:30 p.m.

**ADDRESSES:** New Ellenton Community Center, 212 Pine Hill Avenue, New Ellenton, SC 29809.

**FOR FURTHER INFORMATION CONTACT:** de'Lisa Carrico, Office of External Affairs, Department of Energy, Savannah River Operations Office, P.O. Box A, Aiken, SC 29802; Phone: (803) 952–8607.

**SUPPLEMENTARY INFORMATION:**

*Purpose of the Board:* The purpose of the Board is to make recommendations to DOE–EM and site management in the areas of environmental restoration, waste management, and related activities.

*Tentative Agenda:*

**Monday, November 16, 2015**

1:00 p.m. Opening and Agenda Review
1:20 p.m. Work Plan Update
1:30 p.m. Combined Committees Session
*Order of committees:*
- Facilities Disposition & Site Remediation
- Administrative & Outreach
- Nuclear Materials
- Waste Management
- Strategic & Legacy Management

5:15 p.m. Public Comments
5:30 p.m. Adjourn

**Tuesday, November 17, 2015**

8:30 a.m. Opening, Chair Update, and Agenda Review
8:55 a.m. Agency Updates
10:00 a.m. Public Comments
10:15 a.m. Break
10:30 a.m. Facilities Disposition & Site Remediation Committee Report
11:30 a.m. Public Comments
11:45 a.m. Lunch Break
1:15 p.m. Waste Management Committee Report
2:15 p.m. Administrative & Outreach Committee Report
2:30 p.m. Break
2:45 p.m. Nuclear Materials Committee Report
3:30 p.m. Strategic & Legacy Management Committee Report
4:15 p.m. Public Comments
4:30 p.m. Adjourn

*Public Participation:* The EM SSAB, Savannah River Site, welcomes the attendance of the public at its advisory committee meetings and will make every effort to accommodate persons with physical disabilities or special needs. If you require special accommodations due to a disability, please contact de'Lisa Carrico at least seven days in advance of the meeting at the phone number listed above. Written statements may be filed with the Board either before or after the meeting. Individuals who wish to make oral statements pertaining to agenda items should contact de'Lisa Carrico's office at the address or telephone listed above. Requests must be received five days prior to the meeting and reasonable provision will be made to include the presentation in the agenda. The Deputy Designated Federal Officer is empowered to conduct the meeting in a fashion that will facilitate the orderly

conduct of business. Individuals wishing to make public comments will be provided a maximum of five minutes to present their comments.

*Minutes:* Minutes will be available by writing or calling de'Lisa Carrico at the address or phone number listed above. Minutes will also be available at the following Web site: *http://cab.srs.gov/srs-cab.html.*

Issued at Washington, DC on October 16, 2015.

**LaTanya R. Butler,**

*Deputy Committee Management Officer.*

[FR Doc. 2015–26853 Filed 10–21–15; 8:45 am]

**BILLING CODE 6450–01–P**

## DEPARTMENT OF ENERGY

### Environmental Management Site-Specific Advisory Board, Oak Ridge Reservation Meeting

**AGENCY:** Department of Energy.

**ACTION:** Notice of open meeting.

**SUMMARY:** This notice announces a meeting of the Environmental Management Site-Specific Advisory Board (EM SSAB), Oak Ridge Reservation. The Federal Advisory Committee Act (Pub. L. 92–463, 86 Stat. 770) requires that public notice of this meeting be announced in the **Federal Register.**

**DATES:** Tuesday, November 10, 2015, 6:00 p.m.

**ADDRESSES:** Chuy's Meeting Room, 9235 Kingston Pike, Knoxville, Tennessee 37902.

**FOR FURTHER INFORMATION CONTACT:** Melyssa P. Noe, Federal Coordinator, Department of Energy Oak Ridge Operations Office, P.O. Box 2001, EM–90, Oak Ridge, TN 37831. Phone (865) 241–3315; Fax (865) 576–0956 or email: *melyssa.noe@orem.doe.gov* or check the Web site at *http://energy.gov/orem/services/community-engagement/oak-ridge-site-specific-advisory-board.*

**SUPPLEMENTARY INFORMATION:**

*Purpose of the Board:* The purpose of the Board is to make recommendations to DOE–EM and site management in the areas of environmental restoration, waste management, and related activities.

*Tentative Agenda*

- Welcome and Announcements
- Comments from the Deputy Designated Federal Officer
- Comments from the DOE, Tennessee Department of Environment and Conservation, and Environmental Protection Agency Liaisons
- Public Comment Period
- DOE Presentation
- Additions/Approval of Agenda
- Motions/Approval of October 14, 2015 Meeting Minutes
- Status of Recommendations with DOE
- Committee Reports
- Federal Coordinator Report
- Adjourn

*Public Participation:* The EM SSAB, Oak Ridge, welcomes the attendance of the public at its advisory committee meetings and will make every effort to accommodate persons with physical disabilities or special needs. If you require special accommodations due to a disability, please contact Melyssa P. Noe at least seven days in advance of the meeting at the phone number listed above. Written statements may be filed with the Board either before or after the meeting. Individuals who wish to make oral statements pertaining to the agenda item should contact Melyssa P. Noe at the address or telephone number listed above. Requests must be received five days prior to the meeting and reasonable provision will be made to include the presentation in the agenda. The Deputy Designated Federal Officer is empowered to conduct the meeting in a fashion that will facilitate the orderly conduct of business. Individuals wishing to make public comments will be provided a maximum of five minutes to present their comments.

*Minutes:* Minutes will be available by writing or calling Melyssa P. Noe at the address and phone number listed above. Minutes will also be available at the following Web site: *http://energy.gov/orem/services/community-engagement/oak-ridge-site-specific-advisory-board.*

Issued at Washington, DC, on October 16, 2015.

**LaTanya R. Butler,**

*Deputy Committee Management Officer.*

[FR Doc. 2015–26854 Filed 10–21–15; 8:45 am]

**BILLING CODE 6450–01–P**

## DEPARTMENT OF ENERGY

### Federal Energy Regulatory Commission

### Combined Notice of Filings #1

October 9, 2015.

Take notice that the Commission received the following electric corporate filings:

*Docket Numbers:* EC16–8–000.

*Applicants:* RPEP MTA Neptune, LLC, RPEP SMRS Neptune, LLC, Rahr Neptune, LLC, PowerBridge, LLC.

*Description:* Joint Application for Authorization Under Section 203 of the Federal Power Act and Request for Expedited Action.

*Filed Date:* 10/8/15.

*Accession Number:* 20151008–5234.

*Comments Due:* 5 p.m. ET 10/29/15.

*Docket Numbers:* EC16–9–000.

*Applicants:* PowerBridge, LLC, Boundless Energy, LLC, Anbaric Neptune, LLC, Standard Energy Development Inc., Cianbro Development Corporation, Charles J. Micoleau Trust, CTSBM Investments LLC, James Broder, Charles E. Hewett, Ullico Infrastructure Neptune Holdco, LL.

*Description:* Application for Authorization for Disposition of Jurisdictional Facilities, Requests for Confidential Treatment, Waivers, and Expedited Consideration of Ullico Infrastructure Neptune Holdco, LLC, et al. under EC16–9.

*Filed Date:* 10/8/15.

*Accession Number:* 20151008–5237.

*Comments Due:* 5 p.m. ET 10/29/15.

Take notice that the Commission received the following electric rate filings:

*Docket Numbers:* ER15–1437–001.

*Applicants:* Entergy Gulf States Louisiana, L.L.C.

*Description:* Tariff Amendment: EGSL–ETI Acquisition Adjustment to be effective 12/31/998.

*Filed Date:* 10/8/15.

*Accession Number:* 20151008–5214.

*Comments Due:* 5 p.m. ET 10/29/15.

*Docket Numbers:* ER15–2409–001.

*Applicants:* Midcontinent Independent System Operator, Inc.

*Description:* Tariff Amendment: 2015–10–08_SA 2825 Amendment to MidAmerican-Highland Wind GIA (J285) to be effective 8/4/2015.

*Filed Date:* 10/8/15.

*Accession Number:* 20151008–5209.

*Comments Due:* 5 p.m. ET 10/29/15.

*Docket Numbers:* ER16–40–000.

*Applicants:* Nevada Power Company.

*Description:* Compliance filing: OATT Revisions to Attachment O Update from NVE Database and Current to be effective 5/15/2015.

*Filed Date:* 10/8/15.

*Accession Number:* 20151008–5211.

*Comments Due:* 5 p.m. ET 10/29/15.

*Docket Numbers:* ER16–41–000.

*Applicants:* Electric Energy, Inc.

*Description:* Section 205(d) Rate Filing: Revised and Restated Cost-Based Power Contract to be effective 11/1/2015.

*Filed Date:* 10/8/15.

*Accession Number:* 20151008–5213.

*Comments Due:* 5 p.m. ET 10/29/15.

*Docket Numbers:* ER16–42–000.

*Applicants:* Pacific Gas and Electric Company.

*Description:* Section 205(d) Rate Filing: Balancing Account Update 2016 (TRBAA, RSBA, ECRBAA) to be effective 1/1/2016.

*Filed Date:* 10/8/15.
*Accession Number:* 20151008–5216.
*Comments Due:* 5 p.m. ET 10/29/15.

*Docket Numbers:* ER16–43–000.
*Applicants:* Southern California Edison Company.
*Description:* Section 205(d) Rate Filing: Service Agreement with Ecos Energy, LLC Painted Hill Solar Project to be effective 12/9/2015.
*Filed Date:* 10/9/15.
*Accession Number:* 20151009–5003.
*Comments Due:* 5 p.m. ET 10/30/15.

*Docket Numbers:* ER16–44–000.
*Applicants:* Southern California Edison Company.
*Description:* Section 205(d) Rate Filing: Large Generator Interconnection Agreement for Pastoria Energy Facility TOT645 to be effective 10/17/2015.
*Filed Date:* 10/9/15.
*Accession Number:* 20151009–5004.
*Comments Due:* 5 p.m. ET 10/30/15.

The filings are accessible in the Commission's eLibrary system by clicking on the links or querying the docket number.

Any person desiring to intervene or protest in any of the above proceedings must file in accordance with Rules 211 and 214 of the Commission's Regulations (18 CFR 385.211 and 385.214) on or before 5:00 p.m. Eastern time on the specified comment date. Protests may be considered, but intervention is necessary to become a party to the proceeding.

eFiling is encouraged. More detailed information relating to filing requirements, interventions, protests, service, and qualifying facilities filings can be found at: *http://www.ferc.gov/docs-filing/efiling/filing-req.pdf.* For other information, call (866) 208–3676 (toll free). For TTY, call (202) 502–8659.

**Nathaniel J. Davis, Sr.,**

*Deputy Secretary.*

[FR Doc. 2015–26797 Filed 10–21–15; 8:45 am]

**BILLING CODE 6717–01–P**

---

## DEPARTMENT OF ENERGY

### Federal Energy Regulatory Commission

### Combined Notice of Filings #1

Take notice that the Commission received the following electric corporate filings:

*Docket Numbers:* EC16–14–000.
*Applicants:* Eden Solar, LLC.
*Description:* Application for Authorization Under Section 203 of the Federal Power Act, Request for Expedited Consideration and Confidential Treatment of Eden Solar, LLC.
*Filed Date:* 10/16/15.
*Accession Number:* 20151016–5305.
*Comments Due:* 5 p.m. ET 11/6/15.

Take notice that the Commission received the following electric rate filings:

*Docket Numbers:* ER16–89–000.
*Applicants:* Jether Energy Research, LTD.
*Description:* Baseline eTariff Filing: Application for MBR Authority to be effective 12/14/2015.
*Filed Date:* 10/15/15.
*Accession Number:* 20151015–5284.
*Comments Due:* 5 p.m. ET 11/5/15.

*Docket Numbers:* ER16–90–000.
*Applicants:* Golden Hills Interconnection, LLC.
*Description:* Baseline eTariff Filing: Golden Hills Interconnection, LLC MBR Application to be effective 11/18/2015.
*Filed Date:* 10/15/15.
*Accession Number:* 20151015–5312.
*Comments Due:* 5 p.m. ET 11/5/15.

*Docket Numbers:* ER16–91–000.
*Applicants:* Blythe Solar 110, LLC.
*Description:* Baseline eTariff Filing: Blythe Solar 110, LLC Application for MBR Authority to be effective 12/1/2015.
*Filed Date:* 10/15/15.
*Accession Number:* 20151015–5314.
*Comments Due:* 5 p.m. ET 11/5/15.

*Docket Numbers:* ER16–92–000.
*Applicants:* ISO New England Inc.
*Description:* § 205(d) Rate Filing: 2016 Capital Budget and Revised Tariff Sheets for Recovery of 2016 Admin. Costs to be effective 1/1/2016.
*Filed Date:* 10/16/15.
*Accession Number:* 20151016–5158.
*Comments Due:* 5 p.m. ET 11/6/15.

*Docket Numbers:* ER16–93–000.
*Applicants:* ISO New England Inc.
*Description:* § 205(d) Rate Filing: Revised Tariff Sheets for Recovery of Costs for 2016 Operation of NESCOE to be effective 1/1/2016.
*Filed Date:* 10/16/15.
*Accession Number:* 20151016–5173.
*Comments Due:* 5 p.m. ET 11/6/15.

*Docket Numbers:* ER16–94–000.
*Applicants:* ISO New England Inc.
*Description:* ISO New England Inc. submits Third Quarter 2015 Capital Budget Report under ER16–94.
*Filed Date:* 10/16/15.
*Accession Number:* 20151016–5183.
*Comments Due:* 5 p.m. ET 11/6/15.

*Docket Numbers:* ER16–95–000.
*Applicants:* Midcontinent Independent System Operator, Inc.
*Description:* § 205(d) Rate Filing: 2015–10–16_SA 2834 ATC–NSPW Design and Construction Agreement to be effective 12/15/2015.
*Filed Date:* 10/16/15.
*Accession Number:* 20151016–5289.
*Comments Due:* 5 p.m. ET 11/6/15.

*Docket Numbers:* ER16–96–000.
*Applicants:* Midcontinent Independent System Operator, Inc.
*Description:* § 205(d) Rate Filing: 2015–10–16_SA 2835 ATC–NPS Pole Removal and Replacement Agreement to be effective 12/15/2015.
*Filed Date:* 10/16/15.
*Accession Number:* 20151016–5291.
*Comments Due:* 5 p.m. ET 11/6/15.

*Docket Numbers:* ER16–97–000.
*Applicants:* Entergy Arkansas, Inc.
*Description:* § 205(d) Rate Filing: EAI–SWPA Amendatory Agreement to be effective 1/1/2017.
*Filed Date:* 10/16/15.
*Accession Number:* 20151016–5297.
*Comments Due:* 5 p.m. ET 11/6/15.

*Docket Numbers:* ER16–98–000.
*Applicants:* Windom Transmission, LLC.
*Description:* Baseline eTariff Filing: Windom Transmission and ALP Wind Transmission and Interconnection Agreement to be effective 12/15/2015.
*Filed Date:* 10/16/15.
*Accession Number:* 20151016–5328.
*Comments Due:* 5 p.m. ET 11/6/15.

Take notice that the Commission received the following electric securities filings:

*Docket Numbers:* ES16–1–000.
*Applicants:* Allegheny Generating Company.
*Description:* Application of Allegheny Generating Company for Authorization under Section 204(a) of the Federal Power Act to Issue Short-Term Debt Securities.
*Filed Date:* 10/15/15.
*Accession Number:* 20151015–5348.
*Comments Due:* 5 p.m. ET 11/5/15.

*Docket Numbers:* ES16–2–000.
*Applicants:* Mississippi Power Company.
*Description:* Application of Mississippi Power Company for Authorization to Issue Securities Under Section 204 of the Federal Power Act and Request tor Exemption from Competitive Bidding Requirements.
*Filed Date:* 10/16/15.
*Accession Number:* 20151016–5304.
*Comments Due:* 5 p.m. ET 11/6/15.

*Docket Numbers:* ES16–3–000.
*Applicants:* PacifiCorp.
*Description:* Application for Authorization to issue and sell up to $1.5 billion of promissory notes or other evidences of unsecured short-term indebtedness of PacifiCorp.
*Filed Date:* 10/16/15.
*Accession Number:* 20151016–5346.
*Comments Due:* 5 p.m. ET 11/6/15.

The filings are accessible in the Commission's eLibrary system by

clicking on the links or querying the docket number.

Any person desiring to intervene or protest in any of the above proceedings must file in accordance with Rules 211 and 214 of the Commission's Regulations (18 CFR 385.211 and 385.214) on or before 5:00 p.m. Eastern time on the specified comment date. Protests may be considered, but intervention is necessary to become a party to the proceeding.

eFiling is encouraged. More detailed information relating to filing requirements, interventions, protests, service, and qualifying facilities filings can be found at: *http://www.ferc.gov/docs-filing/efiling/filing-req.pdf.* For other information, call (866) 208–3676 (toll free). For TTY, call (202) 502–8659.

Dated: October 16, 2015.

**Nathaniel J. Davis, Sr.,**

*Deputy Secretary.*

[FR Doc. 2015–26835 Filed 10–21–15; 8:45 am]

**BILLING CODE 6717–01–P**

## DEPARTMENT OF ENERGY

### Federal Energy Regulatory Commission

**[Project No. 1962–203]**

### Pacific Gas and Electric Company; Notice of Application Accepted for Filing, Soliciting Comments, Motions To Intervene, and Protests

Take notice that the following hydroelectric application has been filed with the Commission and is available for public inspection:

a. *Type of Application:* Application for Temporary Variance of Minimum Flow Requirement.

b. *Project No.:* 1962–203.

c. *Date Filed:* October 15, 2015.

d. *Applicant:* Pacific Gas and Electric Company (licensee).

e. *Name of Project:* Rock Creek-Cresta Project.

f. *Location:* North Fork Feather River in Plumas, Butte, Yuba, and Sutter counties, California.

g. *Filed Pursuant to:* Federal Power Act, 16 U.S.C. 791(a)–825(r).

h. *Applicant Contact:* Mr. Steve Bauman, License Coordinator, Pacific Gas and Electric Company, Mail Code: N13E, P.O. Box 770000, San Francisco, CA 94177, (415) 973–7410.

i. *FERC Contact:* Mr. John Aedo, (415) 369–3335, or *john.aedo@ferc.gov.*

j. Deadline for filing comments, motions to intervene, protests, and recommendations is October 30, 2015. The Commission strongly encourages electronic filing. Please file motions to intervene, protests, comments, or recommendations using the Commission's eFiling system at *http://www.ferc.gov/docs-filing/efiling.asp.* Commenters can submit brief comments up to 6,000 characters, without prior registration, using the eComment system at *http://www.ferc.gov/docs-filing/ecomment.asp.* You must include your name and contact information at the end of your comments. For assistance, please contact FERC Online Support at *FERCOnlineSupport@ferc.gov,* (866) 208–3676 (toll free), or (202) 502–8659 (TTY). In lieu of electronic filing, please send a paper copy to: Secretary, Federal Energy Regulatory Commission, 888 First Street, NE., Washington, DC 20426. Please include the project number (P–1962–203) on any comments, motions to intervene, protests, or recommendations filed.

k. Description of Request: The licensee requests a temporary variance of the minimum flow requirement in the Rock Creek and Cresta reaches of the North Fork Feather River. The licensee states that it is planning to conduct inspections of the low-level outlet conduit and gates of the Rock Creek and Cresta dams. In addition, the licensee plans to conduct dive inspections of the plunge pools of both dams. In order to facilitate the inspections and allow the field crew to work safely in the channel and plunge pools, the licensee requests a temporary reduction in the minimum flows below both dams. Specifically, the licensee requests Commission approval to reduce flows from the required 110 cubic feet per second (cfs) and 100 below Rock Creek and Crests Dams, respectively, to between 60 and 80 cfs at both dams. The licensee requests that the flow variance occur between November 1 and December 31, 2015.

l. Locations of the Application: A copy of the application is available for inspection and reproduction at the Commission's Public Reference Room, located at 888 First Street NE., Room 2A, Washington, DC 20426, or by calling (202) 502–8371. This filing may also be viewed on the Commission's Web site at *http://www.ferc.gov/docs-filing/elibrary.asp.* Enter the docket number excluding the last three digits in the docket number field to access the document. You may also register online at *http://www.ferc.gov/docs-filing/esubscription.asp* to be notified via email of new filings and issuances related to this or other pending projects. For assistance, call 1–866–208–3676 or email *FERCOnlineSupport@ferc.gov,* for TTY, call (202) 502–8659. A copy is also available for inspection and reproduction at the address in item (h) above.

m. Individuals desiring to be included on the Commission's mailing list should so indicate by writing to the Secretary of the Commission.

n. Comments, Protests, or Motions to Intervene: Anyone may submit comments, a protest, or a motion to intervene in accordance with the requirements of Rules of Practice and Procedure, 18 CFR 385.210, .211, .214. In determining the appropriate action to take, the Commission will consider all protests or other comments filed, but only those who file a motion to intervene in accordance with the Commission's Rules may become a party to the proceeding. Any comments, protests, or motions to intervene must be received on or before the specified comment date for the particular application.

o. Filing and Service of Responsive Documents: Any filing must (1) bear in all capital letters the title ''COMMENTS'', ''PROTEST'', or ''MOTION TO INTERVENE'' as applicable; (2) set forth in the heading the name of the applicant and the project number of the application to which the filing responds; (3) furnish the name, address, and telephone number of the person protesting or intervening; and (4) otherwise comply with the requirements of 18 CFR 385.2001 through 385.2005. All comments, motions to intervene, or protests must set forth their evidentiary basis and otherwise comply with the requirements of 18 CFR 4.34(b). All comments, motions to intervene, or protests should relate to project works which are the subject of the license surrender. Agencies may obtain copies of the application directly from the applicant. A copy of any protest or motion to intervene must be served upon each representative of the applicant specified in the particular application. If an intervener files comments or documents with the Commission relating to the merits of an issue that may affect the responsibilities of a particular resource agency, they must also serve a copy of the document on that resource agency. A copy of all other filings in reference to this application must be accompanied by proof of service on all persons listed in the service list prepared by the Commission in this proceeding, in accordance with 18 CFR 4.34(b) and 385.2010.

Dated: October 16, 2015.

**Nathaniel J. Davis, Sr.,**

*Deputy Secretary.*

[FR Doc. 2015–26836 Filed 10–21–15; 8:45 am]

**BILLING CODE 6717–01–P**

## DEPARTMENT OF ENERGY

### Federal Energy Regulatory Commission

### Combined Notice of Filings #2 (October 9, 2015)

Take notice that the Commission received the following electric rate filings:

*Docket Numbers:* ER12–309–007.
*Applicants:* Midcontinent Independent System Operator, Inc.
*Description:* Compliance filing: 2015–10–09_Compliance Net Zero Attachment X Filing to be effective 1/1/2012.
*Filed Date:* 10/9/15.
*Accession Number:* 20151009–5237.
*Comments Due:* 5 p.m. ET 10/30/15.

*Docket Numbers:* ER16–45–000.
*Applicants:* NorthWestern Corporation.
*Description:* Initial rate filing: SA 759—Agreement with Tessenderlo Kerley Services re Jupiter Sulphur Project to be effective 10/10/2015.
*Filed Date:* 10/9/15.
*Accession Number:* 20151009–5231
*Comments Due:* 5 p.m. ET 10/30/15.

*Docket Numbers:* ER16–46–000.
*Applicants:* PJM Interconnection, L.L.C.
*Description:* Section 205(d) Rate Filing: First Revised Interconnection Service Agreement No. 3837, Queue No. X4–048 to be effective 9/14/2015.
*Filed Date:* 10/9/15.
*Accession Number:* 20151009–5260.
*Comments Due:* 5 p.m. ET 10/30/15.

Take notice that the Commission received the following land acquisition reports:

*Docket Numbers:* LA15–3–000.
*Applicants:* MidAmerican Energy Company.
*Description:* Quarterly Land Acquisition Report of MidAmerican Energy Company, et al.
*Filed Date:* 10/9/15.
*Accession Number:* 20151009–5111.
*Comments Due:* 5 p.m. ET 10/30/15.

The filings are accessible in the Commission's eLibrary system by clicking on the links or querying the docket number.

Any person desiring to intervene or protest in any of the above proceedings must file in accordance with Rules 211 and 214 of the Commission's Regulations (18 CFR 385.211 and 385.214) on or before 5:00 p.m. Eastern time on the specified comment date. Protests may be considered, but intervention is necessary to become a party to the proceeding.

eFiling is encouraged. More detailed information relating to filing requirements, interventions, protests, service, and qualifying facilities filings can be found at: *http://www.ferc.gov/docs-filing/efiling/filing-req.pdf.* For other information, call (866) 208–3676 (toll free). For TTY, call (202) 502–8659.

**Nathaniel J. Davis, Sr.,**
*Deputy Secretary.*

[FR Doc. 2015–26798 Filed 10–21–15; 8:45 am]

**BILLING CODE P**

## ENVIRONMENTAL PROTECTION AGENCY

**[EPA–HQ–OGC–2015–0678; FRL 9936–07–OGC]**

### Proposed Settlement Agreement

**AGENCY:** Environmental Protection Agency (EPA).

**ACTION:** Notice of proposed settlement agreement; request for public comment.

**SUMMARY:** In accordance with section 113(g) of the Clean Air Act (the ''Act''), 42 U.S.C. 7413(g), notice is hereby given of a proposed settlement agreement to resolve two cases filed by the WildEarth Guardians (''Guardians'') and Sierra Club involving EPA actions under the CAA Title V operating permit program. On January 7, 2015, Guardians and Sierra Club filed petitions with the Environmental Appeal Board (''EAB'') challenging a Part 71 Operating Permit issued by EPA Region 8 on December 5, 2014, to Deseret Power Cooperative (''Deseret'') to operate the Bonanza Power Plant (''Bonanza Plant'') (*In re Deseret Power Cooperative Bonanza Power Plant,* CAA Appeal Nos. 15–1, 15–2). Under the proposed settlement agreement, Deseret would submit an application for a minor New Source Review (NSR) permit to implement the specific terms of the agreement; and EPA would draft and provide for public notice of the proposed permit.

**DATES:** Written comments on the proposed settlement agreement must be received by *November 23, 2015.*

**ADDRESSES:** Submit your comments, identified by Docket ID number EPA–HQ–OGC–2015–0678 online at *www.regulations.gov* (EPA's preferred method); by email to *oei.docket@epa.gov*; by mail to EPA Docket Center, Environmental Protection Agency, Mailcode: 2822T, 1200 Pennsylvania Ave. NW., Washington, DC 20460–0001; or by hand delivery or courier to EPA Docket Center, EPA West, Room 3334, 1301 Constitution Ave. NW., Washington, DC, between 8:30 a.m. and 4:30 p.m. Monday through Friday, excluding legal holidays. Comments on a disk or CD–ROM should be formatted in Word or ASCII file, avoiding the use of special characters and any form of encryption, and may be mailed to the mailing address above.

**FOR FURTHER INFORMATION CONTACT:** Sara L. Laumann, Office of Regional Counsel, EPA Region 8, 1595 Wynkoop Street, Denver CO 80202–2466; *telephone:* (303) 312–6443; *fax number:* (303) 312–6859; *email address: laumann.sara@epa.gov.*

**SUPPLEMENTARY INFORMATION:**

### I. Additional Information About the Proposed Settlement Agreement

The proposed settlement agreement would resolve two cases filed by the WildEarth Guardians (''Guardians'') and Sierra Club involving EPA actions under the CAA Title V operating permit program. On January 7, 2015, Guardians and Sierra Club filed petitions with the Environmental Appeal Board (''EAB'') challenging a Part 71 Operating Permit issued by EPA Region 8 on December 5, 2014, to Deseret Power Cooperative (''Deseret'') to operate the Bonanza Power Plant (''Bonanza Plant''), a 500-megawatt coal-fired power plant located within the exterior boundaries of the Uintah and Ouray Indian Reservation in Utah. Under the proposed settlement agreement, Deseret would submit an application for a minor New Source Review (NSR) permit which would provide for installation of low $NO_X$ burners with over-fire air controls, along with other operator-requested permit terms and conditions. The agreement also provides that if EPA Region 8 issues a final permit with provisions that are consistent with the settlement agreement: (1) Petitioners would file motions to dismiss the EAB appeals; (2) EPA would withdraw a proposed Prevention of Significant Deterioration Permit for the facility; (3) Deseret would withdraw an outstanding permit application; and (4) Deseret and Sierra Club would withdraw their respective and related FOIA requests. Under the agreement EPA would also state its plan to withdraw a proposed Prevention of Significant Deterioration Permit for the Plant. The proposed settlement agreement also provides that nothing in the agreement shall be construed to limit or modify any discretion afforded EPA by the Act or by general principles of administrative law in taking those actions. See the proposed settlement agreement for specific details.

For a period of thirty (30) days following the date of publication of this notice, the Agency will accept written comments relating to the proposed settlement agreement from persons who

were not named as parties or interveners to the litigation in question. EPA may withdraw or withhold consent to the proposed settlement agreement if the comments disclose facts or considerations that indicate that such consent is inappropriate, improper, inadequate, or inconsistent with the requirements of the Act. Unless EPA determines that consent to this settlement agreement should be withdrawn, the terms of the agreement will be affirmed.

**II. Additional Information About Commenting on the Proposed Settlement Agreement**

*A. How can I get a copy of the settlement agreement?*

The official public docket for this action (identified by Docket ID No. EPA–HQ–OGC–2015–0678) contains a copy of the proposed settlement agreement. The official public docket is available for public viewing at the Office of Environmental Information (OEI) Docket in the EPA Docket Center, EPA West, Room 3334, 1301 Constitution Ave. NW., Washington, DC. The EPA Docket Center Public Reading Room is open from 8:30 a.m. to 4:30 p.m., Monday through Friday, excluding legal holidays. The telephone number for the Public Reading Room is (202) 566–1744, and the telephone number for the OEI Docket is (202) 566–1752.

An electronic version of the public docket is available through *www.regulations.gov*. You may use the *www.regulations.gov* to submit or view public comments, access the index listing of the contents of the official public docket, and to access those documents in the public docket that are available electronically. Once in the system, key in the appropriate docket identification number then select ''search.''

It is important to note that EPA's policy is that public comments, whether submitted electronically or in paper, will be made available for public viewing online at *www.regulations.gov* without change, unless the comment contains copyrighted material, CBI, or other information whose disclosure is restricted by statute. Information claimed as CBI and other information whose disclosure is restricted by statute is not included in the official public docket or in the electronic public docket. EPA's policy is that copyrighted material, including copyrighted material contained in a public comment, will not be placed in EPA's electronic public docket but will be available only in printed, paper form in the official public docket. Although not all docket materials may be available electronically, you may still access any of the publicly available docket materials through the EPA Docket Center.

*B. How and to whom do I submit comments?*

You may submit comments as provided in the **ADDRESSES** section. Please ensure that your comments are submitted within the specified comment period. Comments received after the close of the comment period will be marked ''late.'' EPA is not required to consider these late comments.

If you submit an electronic comment, EPA recommends that you include your name, mailing address, and an email address or other contact information in the body of your comment and with any disk or CD–ROM you submit. This ensures that you can be identified as the submitter of the comment and allows EPA to contact you in case EPA cannot read your comment due to technical difficulties or needs further information on the substance of your comment. Any identifying or contact information provided in the body of a comment will be included as part of the comment that is placed in the official public docket, and made available in EPA's electronic public docket. If EPA cannot read your comment due to technical difficulties and cannot contact you for clarification, EPA may not be able to consider your comment.

Use of the *www.regulations.gov* Web site to submit comments to EPA electronically is EPA's preferred method for receiving comments. The electronic public docket system is an ''anonymous access'' system, which means EPA will not know your identity, email address, or other contact information unless you provide it in the body of your comment. In contrast to EPA's electronic public docket, EPA's electronic mail (email) system is not an ''anonymous access'' system. If you send an email comment directly to the Docket without going through *www.regulations.gov,* your email address is automatically captured and included as part of the comment that is placed in the official public docket, and made available in EPA's electronic public docket.

Dated: October 13, 2015.

**Lorie J. Schmidt,**

*Associate General Counsel.*

[FR Doc. 2015–26919 Filed 10–21–15; 8:45 am]

**BILLING CODE 6560–50–P**

## ENVIRONMENTAL PROTECTION AGENCY

**[EPA–HQ–ORD–2015–0635; FRL–9936–06–ORD]**

## Board of Scientific Counselors (BOSC) Chemical Safety for Sustainability Subcommittee; Public Teleconference Meeting—November 2015

**AGENCY:** Environmental Protection Agency (EPA).

**ACTION:** Notice of public teleconference meeting.

**SUMMARY:** Pursuant to the Federal Advisory Committee Act, Public Law 92–463, the U.S. Environmental Protection Agency, Office of Research and Development (ORD), gives notice of a public teleconference meeting of the Board of Scientific Counselors (BOSC) Chemical Safety for Sustainability Subcommittee.

**DATES:** The teleconference meeting will be held on Tuesday, November 10, 2015, from 12:00 p.m. to 2:00 p.m., Eastern Time. The teleconference may adjourn early if all business is finished or may adjourn late if additional time is needed. Any member of the public interested in receiving a draft agenda, attending the teleconference, or making a presentation during the teleconference may contact Megan Fleming, the Designated Federal Officer, via any of the contact methods listed in the **FOR FURTHER INFORMATION CONTACT** section below. Requests will be accepted up to one business day before the meeting.

**ADDRESSES:** Participation in the meeting will be by teleconference only; meeting rooms will not be used. Members of the public may obtain the call-in number and access code for the call from Megan Fleming, the Designated Federal Officer, via any of the contact methods listed in the **FOR FURTHER INFORMATION CONTACT** section below.

Submitting Comments: Submit your comments, identified by Docket ID No. EPA–HQ–ORD–2015–0635, by one of the following methods:

- *www.regulations.gov:* Follow the on-line instructions for submitting comments.
- *Email:* Send comments by electronic mail (email) to: *ORD.Docket@epa.gov,* Attention Docket ID No. EPA–HQ–ORD–2015–0635.
- *Fax:* Fax comments to: (202) 566–0224, Attention Docket ID No. EPA–HQ–ORD–2015–0635.
- *Mail:* Send comments by mail to: Board of Scientific Counselors (BOSC) Chemical Safety for Sustainability Subcommittee Docket, Mail Code: 2822T, 1301 Constitution Ave. NW.,

Washington, DC, 20004, Attention Docket ID No. EPA–HQ–ORD–2015–0635.

• *Hand Delivery or Courier:* Deliver comments to: EPA Docket Center (EPA/DC), Room 3334, William Jefferson Clinton West Building, 1301 Constitution Ave. NW., Washington, DC, Attention Docket ID No. EPA–HQ–ORD–2015–0635. Note: This is not a mailing address. Deliveries are only accepted during the docket's normal hours of operation, and special arrangements should be made for deliveries of boxed information.

*Instructions:* Direct your comments to Docket ID No. EPA–HQ–ORD–2015–0635. The EPA's policy is that all comments received will be included in the public docket without change and may be made available online at *www.regulations.gov,* including any personal information provided, unless the comment includes information claimed to be Confidential Business Information (CBI) or other information whose disclosure is restricted by statute. Do not submit information that you consider to be CBI or otherwise protected through *www.regulations.gov* or email. The *www.regulations.gov* Web site is an ''anonymous access'' system, which means the EPA will not know your identity or contact information unless you provide it in the body of your comment. If you send an email comment directly to the EPA without going through *www.regulations.gov,* your email address will be automatically captured and included as part of the comment that is placed in the public docket and made available on the Internet. If you submit an electronic comment, the EPA recommends that you include your name and other contact information in the body of your comment and with any disk or CD–ROM you submit. If the EPA cannot read your comment due to technical difficulties and cannot contact you for clarification, the EPA may not be able to consider your comment. Electronic files should avoid the use of special characters, any form of encryption, and be free of any defects or viruses. For additional information about the EPA's public docket visit the EPA Docket Center homepage at *http://www.epa.gov/dockets/.*

*Docket:* All documents in the docket are listed in the *www.regulations.gov* index. Although listed in the index, some information is not publicly available, *e.g.,* CBI or other information whose disclosure is restricted by statute. Certain other material, such as copyrighted material, will be publicly available only in hard copy. Publicly available docket materials are available either electronically in *www.regulations.gov* or in hard copy at the Board of Scientific Counselors (BOSC) Chemical Safety for Sustainability Subcommittee Docket, EPA/DC, William Jefferson Clinton West Building, Room 3334, 1301 Constitution Ave. NW., Washington, DC. The Public Reading Room is open from 8:30 a.m. to 4:30 p.m., Monday through Friday, excluding legal holidays. The telephone number for the Public Reading Room is (202) 566–1744, and the telephone number for the ORD Docket is (202) 566–1752.

**FOR FURTHER INFORMATION CONTACT:** The Designated Federal Officer via mail at: Megan Fleming, Mail Code 8104R, Office of Science Policy, Office of Research and Development, U.S. Environmental Protection Agency, 1200 Pennsylvania Ave. NW., Washington, DC 20460; via phone/voice mail at: (202) 564–6604; or via email at: *fleming.megan@epa.gov.*

**SUPPLEMENTARY INFORMATION:**

*General Information:* The teleconference is open to the public. Any member of the public interested in receiving a draft agenda, attending the teleconference, or making a presentation during the teleconference may contact Megan Fleming, the Designated Federal Officer, via any of the contact methods listed in the **FOR FURTHER INFORMATION CONTACT** section above. In general, each individual making an oral presentation will be limited to a total of three minutes. Teleconference deliberations will focus on draft report findings and recommendations from an October 2015 meeting. Documents from the October meeting are available for viewing and downloading at: *http://www2.epa.gov/bosc/chemical-safety-sustainability-bosc-subcommittee-meeting-documents.* Proposed agenda items for the teleconference include, but are not limited to, the following: Presentation and discussion of the subcommittee's draft responses to the charge questions and approval of the final draft letter report prior to its submission to the BOSC Executive Committee.

*Information on Services for Individuals with Disabilities:* For information on access or services for individuals with disabilities, please contact Megan Fleming at (202) 564–6604 or *fleming.megan@epa.gov.* To request accommodation of a disability, please contact Megan Fleming, preferably at least ten days prior to the teleconference, to give the EPA as much time as possible to process your request.

Dated October 15, 2015.

**Fred S. Hauchman,**

*Director, Office of Science Policy.*

[FR Doc. 2015–26937 Filed 10–21–15; 8:45 am]

**BILLING CODE 6560–50–P**

---

## ENVIRONMENTAL PROTECTION AGENCY

**[FRL–9935–71–Region 8]**

## Administrative Agreement and Order on Consent for Post Removal Site Control Activities by Bona Fide Prospective Purchaser: Rocky Flats Industrial Park Superfund Site, Jefferson County, Colorado

**AGENCY:** Environmental Protection Agency (EPA).

**ACTION:** Notice of proposed agreement; request for public comment.

**SUMMARY:** In accordance with the requirements of sections 104, 106(a), 107, and 122 of the Comprehensive Environmental Response Compensation, and Liability Act of 1980, as amended (''CERCLA''), 42 U.S.C. 9604, 9606(a), 9607 and 9622, notice is hereby given of the proposed administrative settlement under section 107 and 122 of CERCLA, between the U.S. Environmental Protection Agency (''EPA'') and bona fide prospective purchaser Columbine Strategies LLC (''Settling Party''). The proposed Settlement Agreement requires the Settling Party to conduct work under EPA oversight in exchange for a covenant not to sue pursuant to sections 106 and 107(a) of CERCLA, 42 U.S.C. 9606 and 9607(a) for existing contamination at the Site. The Settling Party consents to and will not contest the authority of the United States to enter into this Agreement or to implement or enforce its terms.

The Settling Parties recognize that this Agreement has been negotiated in good faith and that this Agreement is entered into without the admission or adjudication of any issue of fact or law.

**DATES:** Comments must be submitted on or before November 23, 2015. For thirty (30) days following the date of publication of this notice, the Agency will receive written comments relating to the agreement. The Agency will consider all comments received and may modify or withdraw its consent to the agreement if comments received disclose facts or considerations that indicate that the agreement is inappropriate, improper, or inadequate.

**ADDRESSES:** The Agency's response to any comments, the proposed agreement and additional background information relating to the agreement are available

for public inspection at the EPA Superfund Record Center, 1595 Wynkoop Denver, Colorado, by appointment.

**FOR FURTHER INFORMATION CONTACT:** Steven Moores, Enforcement Attorney, Legal Enforcement Program, Environmental Protection Agency-Region 8, Mail Code 8ENF–L, 1595 Wynkoop Street, Denver, Colorado 80202, (303) 312–6857. Comments and requests for a copy of the proposed agreement should be addressed to Sharon Abendschan, Enforcement Specialist, Environmental Protection Agency—Region 8, Mail Code 8ENF–RC, 1595 Wynkoop Street, Denver, Colorado 80202 and should reference the Rocky Flats Industrial Park Superfund Site, Jefferson County, Colorado.

**Suzanne Bohan,**

*Assistant Regional Administrator, Office of Enforcement, Compliance and Environmental Justice, U.S. Environmental Protection Agency, Region VIII.*

[FR Doc. 2015–26938 Filed 10–21–15; 8:45 am]

**BILLING CODE 6560–50–P**

## FEDERAL ELECTION COMMISSION

### Sunshine Act Meeting

**AGENCY:** Federal Election Commission.

**TIME AND DATE:** Tuesday, October 27, 2015, at 10:00 a.m. and Thursday, October 29, 2015, at the conclusion of the open meeting.

**PLACE:** 999 E Street NW., Washington, DC.

**STATUS:** This meeting will be closed to the public.

**MATTERS TO BE DISCUSSED:** Compliance matters pursuant to 52 U.S.C. 30109. Matters concerning participation in civil actions or proceeding, or arbitration.

* * * * *

**CONTACT PERSON FOR MORE INFORMATION:** Judith Ingram, Press Officer, Telephone: (202) 694–1220.

**Shelley E. Garr,**

*Deputy Secretary.*

[FR Doc. 2015–27087 Filed 10–20–15; 4:15 pm]

**BILLING CODE 6715–01–P**

## FEDERAL HOUSING FINANCE AGENCY

**[No. 2015–N–10]**

### Notice of Establishment of Housing Price Index

**AGENCY:** Federal Housing Finance Agency.

**ACTION:** Final notice.

**SUMMARY:** On May 27, 2015, the Federal Housing Finance Agency (FHFA) published a Notice and Request for Input (Notice) describing a method for assessing the national average single-family house price for use in adjusting the maximum conforming loan limits of Fannie Mae and Freddie Mac (the ''Enterprises''). The Notice responded to section 1322 of the Federal Housing Enterprises Financial Safety and Soundness Act of 1992 (12 U.S.C. 4501 *et seq.*) (''Safety and Soundness Act'') which required FHFA to ''establish and maintain a method of assessing the national average 1-family house price for use in adjusting the conforming loan limitations.'' The Notice indicated that FHFA intends to use its existing ''expanded-data'' house price index (HPI) for such purpose and invited public feedback.

In line with the proposal in the original Notice, after reviewing the public feedback, FHFA has decided to use the expanded-data HPI for annual loan-limit adjustment. Specifically, FHFA will use the seasonally adjusted, expanded-data HPI for the United States.

**DATES:** *Effective Date:* October 22, 2015.

**FOR FURTHER INFORMATION CONTACT:** Questions about the expanded-data HPI and the implementation of the conforming loan limit rules can be addressed to Andrew Leventis, Principal Economist, 202–649–3199, *Andrew.Leventis@fhfa.gov,* or Jamie Schwing, Associate General Counsel, 202–649–3085, *Jamie.Schwing@fhfa.gov,* (not toll-free numbers), Federal Housing Finance Agency, 400 Seventh Street SW., Washington, DC 20024.

**SUPPLEMENTARY INFORMATION:**

### A. Background

The ''Notice of the Establishment of Housing Price Index'' that FHFA issued in May [1] announced that the agency intended to use its expanded-data HPI for the purpose of satisfying section 1322 (12 U.S.C. 4542) of the Safety and Soundness Act.[2] Section 1322 requires FHFA to ''establish and maintain'' a house price index that tracks the average U.S. home price. May's Notice detailed FHFA's rationale for the choice of the expanded-data index over other measures. The Notice discussed the advantages and disadvantages of several metrics and outlined the various considerations FHFA found most compelling in choosing the index. Identifying the seasonally adjusted, expanded-data HPI for the U.S. as the selected index, the Notice invited public input and provided for an input period that extended through July 27, 2015. This Final Notice summarizes the input submissions received and responds to questions and concerns that were raised in the submissions.

### B. Overview of Input Submissions Received

FHFA received a total of 20 submissions in response to the Notice. Submissions were received from private citizens, trade associations, a think tank, and one private company. Twelve of the submissions did not address the issue on which input had been requested: the appropriateness of the chosen home price measure. In most cases, these submissions opined on the desirability of having higher conforming loan limits, rather than FHFA's choice of index.

In general, the eight responsive submissions were favorable to FHFA's proposed use of its expanded-data index for loan limit adjustment. Most submissions supported the basic underlying methodology used in the index construction and appreciated the breadth of the data sample used in forming the index. More generally, submitters agreed that reliance on an agency-produced measure (as opposed to a privately produced index) would be beneficial in that it would ensure continued publication of the reference index. They also concurred with FHFA's belief that its control over the reference index would ensure that undesirable modifications to methodology would not be made (as might happen if the agency relied on an external measure of home prices).

Five of the eight responsive submissions were generally supportive of the use of the expanded-data index as-is. The remaining three did not object to the use of the expanded-data index, but suggested modifications to the process or augmentations. In particular, the proposed adjustments recommended the use of multiple price indexes and, in one case, the consideration of other mortgage market factors.

For the purpose of summarizing and addressing the responsive submissions received, this Final Notice divides them into two groups: ''Supportive'' and ''Other.'' This classification is for convenience; as will be clear in the discussion, responses in both categories were not uniform. For instance, in some cases, the ''Supportive'' submissions included questions or expressed modest concerns. Meanwhile, the ''Other''

[1] *See* 80 FR 30237 (May 27, 2015).

[2] Section 1124(d) of the Housing and Economic Recovery Act of 2008 (HERA), 122 Stat. 2693, amended the Safety and Soundness Act to include this section.

submissions often included strong praise for certain characteristics of FHFA's proposal.

*C. Discussion of the Five Responsive ''Supportive'' Submissions*

*1. Summary*

Three of the five ''supportive'' submissions were wholly in agreement with the proposed use of the expanded-data index for tracking the average U.S. home price. None of the three, which were all submitted by trade associations, provided any material criticism. They expressed strong support for FHFA's choice and, to varying degrees, the principles FHFA used in evaluating measures.

The remaining two ''supportive'' submissions—one from a trade association and one from a private company—provided supplementary recommendations. The submissions addressed the following issues.

a. Data Inputs

Submissions urged FHFA to incorporate as much transaction data as possible in the formation of the expanded-data index.

b. Distressed Sales and Gaps between House Price Indexes

Submissions asked that FHFA track the impact of distressed sales [3] on index estimates over time, while also monitoring divergences between the FHFA index and other home price measures.

c. Transparency and Data Releases

The submitter recommendation was that FHFA publish additional details about the underlying data used for index construction.

d. Constraints on Historical Index Values

One submission asked FHFA to consider constraining the historical index series. That is—the request was that FHFA consider not permitting revisions in prior index estimates. Like all of FHFA indexes, the expanded-data HPI has historical values that are regularly updated to account for new data.

e. Geometric vs. Arithmetic Index

Without veering from its support of the expanded-data index, one submission also noted a theoretical bias in the expanded-data index's measurement of trends in average home prices. In particular, the submitter stated that the underlying methodology used in forming the expanded-data index will create indexes that track the *geometric* average home price as opposed to the arithmetic average home price.[4] In doing so, as a theoretical matter, the index reportedly would grow somewhat more slowly over time than would an arithmetic index. The letter conceded that the differences will be small over the short term (*e.g.,* on an annual bias), but worried about long-term compounding effects. The letter noted that the CoreLogic-produced indexes track arithmetic average home prices and thus are not susceptible to this bias.

*2. FHFA Response*

a. Data Inputs

With respect to the submitter interest in having FHFA increase the amount of data used in calibrating the expanded-data index: FHFA agrees that this is a desirable goal. In the context of tracking overall home values across the country, more data will tend to provide more precise estimates of price changes. While the database currently used is extensive and incorporates a wide array of transaction data, FHFA will continue exploring opportunities for increasing the sample size.[5] As stated in the Notice, to the extent that new data become available and are incorporated, FHFA will communicate the effects of those changes to the public.

b. Distressed Sales and Gaps between House Price Indexes

With respect to monitoring of distressed sales and divergences between the FHFA index and other metrics: FHFA concurs that these are reasonable activities. FHFA, in fact, has been doing this type of monitoring for many years and has published a number of papers showing the results of its work.[6] Also, FHFA publishes ''distress-free'' house price indexes for twelve large cities so that it and the general public can review the localized impact of distressed sales on price measurement. FHFA plans to continue such releases and, more generally, will continue evaluating price movements across multiple measurements.

c. Transparency and Data Releases

A longstanding tradition in HPI production has been to communicate relevant summary data about the data sample to the public. Accordingly, FHFA appreciates the submitter interest in maximizing the transparency of the data used in index calibration. FHFA regularly publishes information about the share of the overall data sample comprising refinance loans and, for the expanded-data index, identifies index estimates that have been calibrated with limited county recorder data.[7] For the purchase-only indexes, flags identify states having small sample sizes. Highlights articles and Technical Notes in the past have provided information about the data samples as well. Aside from the FHFA-provided data, relevant information is also available from the Enterprises. Because few data filters are applied to the data sample before the indexes are estimated, index users seeking information about the Enterprise portion of the expanded-data transactions can benefit from reviewing loan-level summary statistics regularly published by the Enterprises.[8]

Although a great deal of information is already available, FHFA will continue evaluating opportunities for enhancing its release of summary data. In reviewing those opportunities, FHFA will weigh the likely value of the additional detail against the required resource demands. It must also consider whether the release of more data would violate the terms of any applicable data

[3] ''Distressed sales'' include short sales and sales of properties that have gone through foreclosure.

[4] The geometric average of a set of numbers is computed by multiplying the numbers together and then raising the product to the power of one divided by the number of observations. Although not necessarily the case, the geometric average can be close to the median value. The arithmetic average is formed by adding numbers together and dividing by the number of observations.

Although the ''arithmetic'' average is probably the most common interpretation of the term ''average,'' it is not the only recognized meaning of the term, and the statutory text does not make explicit which type of ''average'' the index is supposed to track. Which type of average to use is thus left to the judgment of FHFA, as the agency charged with administering and interpreting the statute.

[5] For instance, opportunities may exist for supplementing the existing data sample with sales data from Multiple Listing Services and electronic appraisal data.

[6] *See,* for instance, Andrew Leventis, ''Revisiting the Differences between the OFHEO and S&P/Case-Shiller Housing Price Indexes: New Explanations'' OFHEO Research Paper, January 2008, available at *http://www.fhfa.gov/PolicyProgramsResearch/Research/PaperDocuments/20080115_RP_RevisitingDifferencesOFHEOSPCaseShillerHPI_N508.pdf*; Andrew Leventis, ''The Impact of Distressed Sales on Repeat-Transactions House Price Indexes,'' FHFA Research Paper, May 27, 2009, available at *http://www.fhfa.gov/PolicyProgramsResearch/Research/PaperDocuments/20090527_RP_ImpactDistressedSalesHPI_RP_508.pdf*; and Will Doerner and Andrew Leventis, ''Working Paper 13–1: Distressed Sales and the FHFA House Price Index,'' FHFA Working Paper, August 2013, available at *http://www.fhfa.gov/PolicyProgramsResearch/Research/PaperDocuments/2013-08_WorkingPaper_13-1_508.pdf.*

[7] *See* the downloadable expanded-data HPI estimates and the ''loan type'' table at *http://www.fhfa.gov/DataTools/Downloads/Pages/House-Price-Index-Datasets.aspx.*

[8] *See,* for instance, Fannie Mae's quarterly ''Credit Supplement'' and Freddie Mac's quarterly ''Financial Results Supplement.''

licenses or would inappropriately release confidential data.

d. Constraints on Historical Index Values

The suggestion that FHFA should contemplate constraining historical values of the expanded-data HPI is motivated by a concern that historical index revisions might cause confusion among some index users. The submitter recognizes that the entire historical index series is revised with each new index release, but it expresses concern that such revisions will make it difficult for the public to evaluate price changes.

Although FHFA understands the argument, it does not believe that artificial constraints on historical values are warranted. The suggestion, which was not a matter of particular stress in the submitter's letter, would entail a significant departure from the basic repeat-transactions indexing model and would require a significant re-tooling of the programming code. Furthermore, historical index revisions tend to be relatively small, particularly over short periods of time. The index constraints would also necessarily reduce the accuracy of the index estimates. Finally, many—if not most—users of FHFA's suite of public indexes are already accustomed to the fact that historical index values are always subject to revision.

e. Geometric vs. Arithmetic Index

Regarding the theoretical biases associated with FHFA's use of an index that tracks the geometric average home value: FHFA appreciates the feedback and understands the issue. As a geometric index, FHFA's expanded-data measure will tend to correlate somewhat more closely with changes in median home values as opposed to arithmetic-average home values and, *in theory,* will grow slightly more slowly than an arithmetic-based price index would. Recognizing the theoretical issue, FHFA notes that growth rate differences will likely be small and increases in a geometric index in practice can actually exceed increases for an arithmetic measure.[9] A conversion to an arithmetic-average index would also inconvenience those index users who find the existing FHFA methodology superior for their applications. Coupled with the fact that a conversion to an arithmetic-average index would require a significant expenditure of internal resources (to change programming code and perform model validation), these considerations lead FHFA to believe that continuing with the existing methodology is appropriate.

**D. Discussion of the Three Responsive ''Other'' Submissions**

*1. Summary*

As mentioned above, the three ''other'' responsive submissions suggested various modifications to the proposal described in the initial Notice. None of them expressed outright disapproval of the use of the expanded-data HPI and, indeed, incorporated it into their proposals. Submitters felt that adjustments were necessary to address perceived shortfalls, however.

The first of the ''other'' submissions expressed support for the use of the expanded-data index, but worried that the index does not adequately reflect price trends for new homes. It noted that the underlying repeat-transactions approach used in forming the index is calibrated using homes that have had two or more historical sales. The upshot of reliance on homes with multiple transactions is that price trends for brand new homes will not be incorporated into the index.

To mitigate the perceived problem, the submitter suggested that FHFA form a weighted index that incorporates the expanded-data measure as well as the price index for new homes published by the Census Bureau—the Constant Quality House Price Index (CQHPI). The change in the new combined index would be calculated as the weighted average of the changes in the FHFA expanded-data HPI and the change in the CQHPI, where the weights would be the relative shares of existing-vs-new home sales. So, for instance, if 15 percent of all property sales in a year were sales of new homes, then the growth in the combined index would be 85 percent times the change in the expanded-data index plus 15 percent times the change in the CQHPI.

The second of the ''other'' submissions expressed no concerns about the absence of new homes in the data sample, but rather was troubled by the potential effects of distressed sales on index estimates. The submitter was concerned that variations in the volumes of distressed sales across geographic areas could inappropriately bias index estimates. To mitigate this problem, the letter recommended that FHFA use both the expanded-data index and its traditional ''purchase-only'' index, which is calibrated using only Enterprise data. Specifically, it suggests that FHFA use the higher of the two appreciation rates—the rates reflected in expanded-data and purchase-only indexes—when adjusting the conforming loan limit. No indication is provided as to why a ''higher-of'' rule is better than some other type of rule (*e.g.,* a simple averaging of the two numbers).

The same submitter asked that FHFA ''explain and justify'' its use of indexes that reflect changes in the geometric average home price. While endorsing the use of the expanded-data and purchase-only indexes, both of which rely on the geometric approach, the letter broadly worries about the same bias as was addressed earlier.

The third of the ''other'' submissions did not address the issue of the geometric index bias, but was otherwise similar in that it suggested the same ''higher-of'' rule for estimating price changes. It contends that a ''superior alternative'' to the use of the expanded-data index would be for FHFA to adjust the loan limits by the *higher of* the annual appreciation rates observed in the expanded-data and purchase-only index. FHFA has had difficulty following the justification set forth in the letter, but the rationale appears to rest on the assumption that, because of tightened credit availability, homes outside of the conforming market (*e.g.,* expensive homes) will evidence relatively anemic price growth in the early stages of economic recoveries. By including homes financed with non-Enterprise loans, the expanded-data HPI reportedly will tend to exhibit lackluster price growth during recoveries.[10] The ''higher-of'' rule would ensure that the conforming loan limit grows by a reasonable rate during recoveries.

The same submitter presented the idea that a ''more sophisticated'' approach to loan limit adjustment might be taken. The alternative approach would take into account market factors beyond home prices when adjusting loan limits. Measures of loan ''access,'' for instance, might be incorporated. The letter also suggests that in *lieu* of this ''more sophisticated'' measure, FHFA might simply use its purchase-only index—either in its existing form or in a value-weighted form.[11] As justification for the use of the purchase-only index, the letter simply indicates that ''it grows faster during market's expansion through the housing cycle.''

*2. FHFA Response*

None of the three ''other'' submissions expressed particularly strong sentiment against the use expanded-data HPI and, in evaluating the rationale for the

[9] *See* page 118 of Robert Shiller, ''Arithmetic Repeat Sales Price Estimators'' *Journal of Housing Economics* 1, 1991, pages 110–126.

[10] The submitter showed that the expanded-data HPI grew more slowly than the purchase-only series in the latest recovery.

[11] The value-weighted index would track the arithmetic average home price.

proposed modifications, FHFA does not find the arguments to be particularly persuasive. In general, the suggested adjustments have limited support from both a statutory and statistical perspective.

a. Price Trends for New Homes

In assessing the criticism that FHFA's index—like other repeat-transactions indexes—does not specifically incorporate information about price trends for brand new homes, FHFA agrees that this may be a theoretical shortfall. However, FHFA does not believe that this will be a particularly significant problem in practice. First, while not capturing price trends for brand new home sales, the repeat-transaction model will reflect price changes for relatively new homes. This is because the underlying calibration dataset includes cases in which new homes were sold and then sold again within a relatively short period of time. The price change for these ''young'' homes will presumably be quite similar to price trends for brand new homes.

In weighting by the share of *sales* for new homes, the submitter's proposal assumes that the index of interest should reflect price trends for homes that have recently sold. FHFA does not agree that this is appropriate in this context. FHFA's expanded-data index, like its other indexes, aims to track average home prices for all U.S. properties—the overall housing stock—and not just values for homes that were sold. To implement the right weighting, FHFA forms the national index by taking a housing-stock-weighted average of outcomes in the respective states.

To be sure, price changes in the individual states necessarily must be calculated using recent transaction prices. However, as evidenced by the fact that FHFA uses housing stock estimates when forming the national index, FHFA's goal is to reflect price trends for the overall housing stock.

Given this goal, the relevant statistic for evaluating the importance of new homes is the share of the housing stock that such homes comprise. New homes represent a very small proportion of the overall housing stock and thus the submitter's concern about the exclusion of new homes is not particularly problematic. Although new home sales constitute a reasonable share of *transactions* in a given year (according to the submitted letter, they have averaged about 17 percent of sales over the past 15 years), new homes are a very small proportion of the housing stock. In 2014, for instance, about 620,000 one-unit new homes were built.[12] For comparison purposes, estimates from the Census Bureau indicate that there were more than 89 million one-unit properties in the country in the preceding year.[13] New homes thus were substantially less than one percent of the housing stock in 2014. A stock-weighted combined index thus would place more than 99 percent of its weight on the price change reported by the expanded-data index.

b. Distressed Sales and Housing Cycles

With respect to the argument that distressed sales can distort home price measurements: As detailed in the Notice and noted by another submitter, there are advantages and disadvantages associated with the inclusion of such sales in the data sample. Such transactions can provide valuable information about price trends in cases where non-distressed sales volumes are modest, for instance. Also, even if removing distressed sales was deemed to be desirable after balancing the various considerations, given current available data sources, it is difficult to clearly identify such sales and remove them from the data sample.[14]

The submission that raises concerns about the expanded-data index showing relatively limited price growth during market recoveries provides no evidence that the (anticipated) slow growth would misrepresent actual appreciation in the market. Tracking of home prices is the key statutory requirement and, accordingly, the relevant issue for FHFA is not whether certain market factors may influence lending and home prices during market cycles; rather, the key issue for FHFA is the reliability and accuracy of price measurement. The plain language of the statute does not ask FHFA to evaluate market conditions (as the submitter would have done using a ''more sophisticated measure'') or to somehow account for likely market factors when selecting the appropriate index. It also does not ask FHFA to select an index that maximizes measured price appreciation during certain parts of the housing cycle.

Given the basic goal of tracking the average home value over time, the ''higher-of'' rule suggested by submitters is not well aligned with the statutory language. By construction, the higher-of rule will clearly inflate estimates of home price appreciation (and minimize measured price declines) and thus would tend to lead to artificial growth in conforming loan limits.

One of the two submitters that advances the ''higher-of'' rule does so to mitigate the effect of distressed sales on index estimates. Even assuming that the inclusion of distressed sales is problematic—an issue addressed above—it is not clear why the *maximum* of the two price change estimates would be superior over the long term to use of the midpoint (or some other function of the two). Also, although there may be some differences, the two indexes generally will be affected similarly by changes in the volumes of distressed sales.

**E. Conclusion**

While not unanimous, the submissions received in response to the Notice were, on balance, quite positive. All submitters seemed to agree that an FHFA-produced measure was appropriate. The only matter of some (limited) debate seemed to be whether small adjustments were necessary. In some cases, the contemplated adjustments would have a limited influence on index estimates. In other cases, FHFA believes that the adjustments are not supported by the statutory language.

FHFA will begin using the seasonally adjusted, expanded-data HPI for the U.S. for the purpose of adjusting the baseline conforming loan limit.[15] Consistent with the usual timing of loan-limit releases, the first use of the index will be in late November of this year when FHFA announces the 2016 Enterprise loan limits. As in prior years, FHFA will publish actual loan limits as well as detailed information about the relevant calculations. Given that the expanded-data index is now the reference index, the relevant discussion will include an evaluation of changes in the expanded-data index.

As detailed at length in the Notice, certain loan-limit provisions in the Enterprise Charters require that, after a period of home price declines, the baseline loan limit cannot rise again until home prices exceed their pre-decline levels.[16] In accordance with this

[12] *See* new private new home ''completions'' in Table 5 of the New Residential Construction report (available at *http://www.census.gov/construction/nrc/pdf/newresconst.pdf*).

[13] *See http://factfinder.census.gov/faces/tableservices/jsf/pages/productview.xhtml?pid=ACS_13_1YR_B25024&prodType=table.*

[14] FHFA currently publishes distress-free measures for 12 metropolitan areas, but such measures make use of a special, third-party-sourced dataset to identify distressed transactions.

[15] As discussed in the prior Notice, because index values will be compared for the same quarter over time, only the most trivial difference will exist between the selected *seasonally adjusted* index and an unadjusted index.

[16] *See* Section 302(b)(2) (12 U.S.C. 17179b)(2)) of the Fannie Mae Charter and Section 305(a)(2) (12

Continued

requirement and as discussed in the prior Notice, when determining the 2016 baseline conforming loan limit this November, the third quarter 2015 price level will be compared to the price level in the third-quarter of 2007—the base period for the recent price decline. As the expanded-data HPI has now been selected as the reference index, market participants can expect that the net price change (positive or negative) will be computed over that interval using the expanded-data HPI.

Dated: October 15, 2015.

**Melvin L. Watt,**

*Director, Federal Housing Finance Agency.*

[FR Doc. 2015–26778 Filed 10–21–15; 8:45 am]

**BILLING CODE 8070–01–P**

U.S.C. 1454(a)(2)) of the Freddie Charter. These sections were amended by HERA sections 1124(a) and (b), 122 Stat. 2691–2692.

## FEDERAL RESERVE SYSTEM

### Formations of, Acquisitions by, and Mergers of Bank Holding Companies

The companies listed in this notice have applied to the Board for approval, pursuant to the Bank Holding Company Act of 1956 (12 U.S.C. 1841 *et seq.*) (BHC Act), Regulation Y (12 CFR part 225), and all other applicable statutes and regulations to become a bank holding company and/or to acquire the assets or the ownership of, control of, or the power to vote shares of a bank or bank holding company and all of the banks and nonbanking companies owned by the bank holding company, including the companies listed below.

The applications listed below, as well as other related filings required by the Board, are available for immediate inspection at the Federal Reserve Bank indicated. The applications will also be available for inspection at the offices of the Board of Governors. Interested persons may express their views in writing on the standards enumerated in the BHC Act (12 U.S.C. 1842(c)). If the proposal also involves the acquisition of a nonbanking company, the review also includes whether the acquisition of the nonbanking company complies with the standards in section 4 of the BHC Act (12 U.S.C. 1843). Unless otherwise noted, nonbanking activities will be conducted throughout the United States.

Unless otherwise noted, comments regarding each of these applications must be received at the Reserve Bank indicated or the offices of the Board of Governors not later than November 16, 2015.

A. Federal Reserve Bank of Richmond (Adam M. Drimer, Assistant Vice President) 701 East Byrd Street, Richmond, Virginia 23261–4528:

1. *Premier Financial Bancorp, Inc.,* Huntington, West Virginia; to merge with First National Bankshares Corporation, and thereby indirectly acquire First National Bank, both in Ronceverte, West Virginia.

B. Federal Reserve Bank of Dallas (Robert L. Triplett III, Senior Vice President) 2200 North Pearl Street, Dallas, Texas 75201–2272:

1. *WSB Bancshares, Inc.,* Wellington, Texas; to acquire 100 percent of the voting share of XIT Bancshares, Inc., and thereby indirectly acquire voting shares of Security State Bank, both in Littlefield, Texas.

Board of Governors of the Federal Reserve System, October 19, 2015.

**Michael J. Lewandowski,**

*Associate Secretary of the Board.*

[FR Doc. 2015–26847 Filed 10–21–15; 8:45 am]

**BILLING CODE 6210–01–P**

## FEDERAL RESERVE SYSTEM

### Change in Bank Control Notices; Acquisitions of Shares of a Bank or Bank Holding Company

The notificants listed below have applied under the Change in Bank Control Act (12 U.S.C. 1817(j)) and § 225.41 of the Board's Regulation Y (12 CFR 225.41) to acquire shares of a bank or bank holding company. The factors that are considered in acting on the notices are set forth in paragraph 7 of the Act (12 U.S.C. 1817(j)(7)).

The notices are available for immediate inspection at the Federal Reserve Bank indicated. The notices also will be available for inspection at the offices of the Board of Governors. Interested persons may express their views in writing to the Reserve Bank indicated for that notice or to the offices of the Board of Governors. Comments must be received not later than November 5, 2015.

A. Federal Reserve Bank of Philadelphia (William Lang, Senior Vice President) 100 North 6th Street, Philadelphia, Pennsylvania 19105–1521:

*1. George K. Miller, Ft. Lauderdale, Florida, individually and as part as a group acting in concert with OceanFirst Bank as the voting trustee of the George K. Miller Voting Trust, Toms River, New Jersey;* to acquire voting shares of Cornerstone Financial Corporation, and thereby indirectly acquire voting shares of Cornerstone Bank, both in Mt. Laurel, New Jersey.

B. Federal Reserve Bank of Atlanta (Chapelle Davis, Assistant Vice President) 1000 Peachtree Street NE., Atlanta, Georgia 30309:

1. *Michael William Mathis of Rome, Georgia;* to acquire voting shares of RCB Financial Corporation, and thereby indirectly acquire voting shares of River City Bank, both of Rome, Georgia.

C. Federal Reserve Bank of Dallas (Robert L. Triplett III, Senior Vice President) 2200 North Pearl Street, Dallas, Texas 75201–2272:

1. *Mary Ann Blaylock, Midland, Texas, individually and Martha Sue Oliver, San Angelo, Texas, individually and as trustee of the Maxine Page 2015 Bank Stock Trust and the James Page Trust;* to acquire voting shares of First Eldorado Bancshares, Inc., Eldorado, Texas, and thereby indirectly acquire The First National Bank of Eldorado, Eldorado, Texas.

Board of Governors of the Federal Reserve System, October 16, 2015.

**Margaret McCloskey Shanks,**

*Deputy Secretary of the Board.*

[FR Doc. 2015–26792 Filed 10–21–15; 8:45 am]

**BILLING CODE 6210–01–P**

## FEDERAL RESERVE SYSTEM

### Proposed Agency Information Collection Activities; Comment Request

**AGENCY:** Board of Governors of the Federal Reserve System.

**SUMMARY:** On June 15, 1984, the Office of Management and Budget (OMB) delegated to the Board of Governors of the Federal Reserve System (Board) its approval authority under the Paperwork Reduction Act (PRA), to approve of and assign OMB numbers to collection of information requests and requirements conducted or sponsored by the Board. Board-approved collections of information are incorporated into the official OMB inventory of currently approved collections of information. Copies of the PRA Submission, supporting statements and approved collection of information instruments are placed into OMB's public docket files. The Federal Reserve may not conduct or sponsor, and the respondent is not required to respond to, an information collection that has been extended, revised, or implemented on or after October 1, 1995, unless it displays a currently valid OMB number.

**DATES:** Comments must be submitted on or before December 21, 2015.

**ADDRESSES:** You may submit comments, identified by *FR Y–12/12A, FR 2230, FR 4001,* or *Reg H–7* by any of the following methods:

- *Agency Web site: http://www.federalreserve.gov.* Follow the

instructions for submitting comments at *http://www.federalreserve.gov/apps/foia/proposedregs.aspx* .

• *Federal eRulemaking Portal: http://www.regulations.gov.* Follow the instructions for submitting comments.

• *Email: regs.comments@federalreserve.gov.* Include OMB number in the subject line of the message.

• *FAX:* (202) 452–3819 or (202) 452–3102.

• *Mail:* Robert deV. Frierson, Secretary, Board of Governors of the Federal Reserve System, 20th Street and Constitution Avenue NW., Washington, DC 20551.

All public comments are available from the Board's Web site at *http://www.federalreserve.gov/apps/foia/proposedregs.aspx* as submitted, unless modified for technical reasons. Accordingly, your comments will not be edited to remove any identifying or contact information. Public comments may also be viewed electronically or in paper form in Room 3515, 1801 K Street (between 18th and 19th Streets NW.) Washington, DC 20006 between 9:00 a.m. and 5:00 p.m. on weekdays.

Additionally, commenters may send a copy of their comments to the OMB Desk Officer—Shagufta Ahmed—Office of Information and Regulatory Affairs, Office of Management and Budget, New Executive Office Building, Room 10235 725 17th Street, NW., Washington, DC 20503 or by fax to (202) 395–6974.

**FOR FURTHER INFORMATION CONTACT:** A copy of the PRA OMB submission, including the proposed reporting form and instructions, supporting statement, and other documentation will be placed into OMB's public docket files, once approved. These documents will also be made available on the Federal Reserve Board's public Web site at: *http://www.federalreserve.gov/apps/reportforms/review.aspx* or may be requested from the agency clearance officer, whose name appears below.

Federal Reserve Board Clearance Officer—Nuha Elmaghrabi—Office of the Chief Data Officer, Board of Governors of the Federal Reserve System, Washington, DC 20551 (202) 452–3829. Telecommunications Device for the Deaf (TDD) users may contact (202) 263–4869, Board of Governors of the Federal Reserve System, Washington, DC 20551.

**SUPPLEMENTARY INFORMATION:**

## Request for Comment on Information Collection Proposals

The following information collections, which are being handled under this delegated authority, have received initial Board approval and are hereby published for comment. At the end of the comment period, the proposed information collections, along with an analysis of comments and recommendations received, will be submitted to the Board for final approval under OMB delegated authority. Comments are invited on the following:

a. Whether the proposed collection of information is necessary for the proper performance of the Federal Reserve's functions; including whether the information has practical utility;

b. The accuracy of the Federal Reserve's estimate of the burden of the proposed information collection, including the validity of the methodology and assumptions used;

c. Ways to enhance the quality, utility, and clarity of the information to be collected;

d. Ways to minimize the burden of information collection on respondents, including through the use of automated collection techniques or other forms of information technology; and

e. Estimates of capital or start up costs and costs of operation, maintenance, and purchase of services to provide information.

## Proposal To Approve Under OMB Delegated Authority the Extension for Three Years, Without Revision, of the Following Reports

1. *Report title:* Consolidated Bank Holding Company Report of Equity Investments in Nonfinancial Companies and the Annual Report of Merchant Banking Investments Held for an Extended Period.

*Agency form number:* FR Y–12, FR Y12A, respectively.

*OMB control number:* 7100–0300.

*Frequency:* FR Y–12: quarterly or semi-annually, FR Y–12A: annually.

*Reporters:* Bank holding companies (BHCs), financial holding companies (FHCs) and savings and loan holding companies (SLHCs).

*Estimated annual reporting hours:* FR Y–12: 1,650 hours, FR Y–12A: 133 hours.

*Estimated average hours per response:* FR Y–12: 16.5 hours, FR Y–12A: 7 hours.

*Number of respondents:* FR Y–12: 28, FR Y–12A: 19.

*General description of report:* This collection of information is mandatory and authorized to be collected from BHCs and FHCs pursuant to Section 5(c) of the Bank Holding Company Act (12 U.S.C. 1844(c)(1)(A)) and from SLHCs pursuant to section 10 of the Home Owners Loan Act (12 U.S.C. 1467a(b)). Overall, the Federal Reserve does not consider the data collected on the FR Y–12 to be confidential. However, a holding company may request confidential treatment pursuant to sections (b)(4) of the Freedom of Information Act (FOIA) (5 U.S.C. 552(b)(4)). The Board considers the data collected on the FR Y–12A to be confidential pursuant to sections (b)(4) and (b)(8) of FOIA (5 U.S.C. 552(b)(4) and (b)(8)).

*Abstract:* The FR Y–12 collects information from certain domestic BHCs and SLHCs on their equity investments in nonfinancial companies. The FR Y–12 data serve as an important risk-monitoring device for institutions active in this business line by allowing supervisory staff to monitor an institution's activity between review dates. They also serve as an early warning mechanism to identify institutions whose activities in this area are growing rapidly and therefore warrant special supervisory attention. The FR Y–12A is filed annually by institutions that hold merchant banking investments that are approaching the end of the holding period permissible under Regulation Y. The FR Y–12A data continue to be a useful tool for examiners to monitor institutions that have merchant banking investments that are approaching holding period limitations.

2. *Report title:* Bank Secrecy Act Suspicious Activity Report (BSA–SAR).

*Agency form number:* FR 2230.

*OMB control number:* 7100–0212.

*Frequency:* On occasion.

*Reporters:* State member banks (SMBs), BHCs and their nonbank subsidiaries, Edge and agreement corporations, and the U.S. branches and agencies, representative offices, and nonbank subsidiaries of foreign banks supervised by the Federal Reserve.

*Estimated annual reporting hours:* 159,071 hours.

*Estimated average hours per response:* 1.5 hours.

*Number of respondents:* 5,489.

*General description of report:* The BSA–SAR is required by law, pursuant to authority contained in the following statutes: 12 U.S.C. 248(a)(1), 3105(c)(2), 3106(a), and 625 of the International Banking Act, 12 U.S.C. 1844(c) of the Bank Holding Company Act, and 12 U.S.C. 1818(s) of the Federal Deposit Insurance Act. The obligation to file a SAR is set forth in the Board's rules, and is mandatory for SMBs (12 CFR 208.62(c)); entities subject to the Bank Holding Company Act and their nonbank subsidiaries (12 CFR 225.4(f)); Edge and agreement corporations (12 CFR 211.5(k)); and U.S. branches, agencies, and representative offices of

foreign banks (12 CFR 211.24(f)). BSA–SARs are exempt from FOIA disclosure by 31 U.S.C. 5319, which specifically provides that SARS ''are exempt from disclosure under section 552 of title 5'', and FOIA exemption 3, 5 U.S.C. 552(b)(3) (matters ''specifically exempted from disclosure by statute'').

*Abstract:* Since 1996, the Federal Reserve Board, the Office of the Comptroller of the Currency, the Federal Deposit Insurance Corporation, the National Credit Union Administration, and the Department of the Treasury's Financial Crimes Enforcement Network have required certain types of financial institutions to report known or suspected violations of law and suspicious transactions. To fulfill these requirements, supervised banking organizations file SARs. Law enforcement agencies use the information submitted on the reporting form to initiate investigations and the Federal Reserve uses the information in the examination and oversight of supervised institutions.

3. *Report title:* Domestic Branch Notification.

*Agency form number:* FR 4001.

*OMB control number:* 7100–0097.

*Frequency:* On occasion.

*Reporters:* SMBs.

*Estimated annual reporting hours:* 131 hours.

*Estimated average hours per response:* 30 minutes for expedited notifications and 1 hour for nonexpedited notifications.

*Number of respondents:* 60 expedited and 101 nonexpedited.

*General description of report:* Section 9(3) of the Federal Reserve Act, (12 U.S.C. 321), requires that SMBs obtain prior Federal Reserve approval before establishing a domestic branch. This requirement is implemented by the provisions of Section 208.6 of the Board's Regulation H, (12 CFR 208.6). The obligation of SMBs to request prior approval of the appropriate supervising Reserve Bank in order to establish a domestic branch is mandatory. The individual respondent information in the notification is not considered confidential.

*Abstract:* The Federal Reserve Act and Regulation H require an SMB to seek prior approval of the Federal Reserve System before establishing or acquiring a domestic branch. Such requests for approval must be filed as notifications at the appropriate Reserve Bank for the SMB. Due to the limited information that an SMB generally has to provide for branch proposals, there is no formal reporting form for a domestic branch notification. An SMB is required to notify the Federal Reserve by letter of its intent to establish one or more new branches and provide with the letter evidence that public notice of the proposed branch(es) has been published by the SMB in the appropriate newspaper(s). The Federal Reserve uses the information provided to fulfill its statutory obligation to review any public comment on proposed branches before acting on the proposals and otherwise to supervise SMBs.

4. *Report title:* Disclosure Requirements in Connection With Subpart H of Regulation H (Consumer Protections in Sales of Insurance).

*Agency form number:* Reg H–7.

*OMB control number:* 7100–0298.

*Frequency:* On occasion.

*Reporters:* State member banks.

*Estimated annual reporting hours:* 13,372 hours.

*Estimated average hours per response:* 1.5 minutes

*Number of respondents:* 849.

*General description of report:* Section 305 of the Gramm-Leach-Bliley Act of 1999 requires that the Federal Reserve and the other federal banking agencies issue joint regulations applicable to retail sales practices, solicitations, advertising, or offers of insurance by depository institutions. (12 U.S.C. 1831x) Subpart H of the Federal Reserve's Regulation H, Consumer Protection in Sales of Insurance, implements section 305 on behalf of the Federal Reserve, and provides for the disclosures outlined above. (12 CFR part 208, subpart H) The obligation of SMBs to make these disclosures is mandatory. Since the Federal Reserve does not collect any information, no issue of confidentiality normally arises.

*Abstract:* Subpart H of Regulation H was adopted pursuant to section 305 of the Gramm-Leach-Bliley Act of 1999, which required the federal banking agencies to issue joint regulations governing retail sales practices, solicitations, advertising, and offers of insurance by, on behalf of, or at the offices of insured depository institutions. The insurance consumer protection rules in Regulation H require depository institutions to prepare and provide certain disclosures to consumers. Covered persons are required to make certain disclosures before the completion of the initial sale of an insurance product or annuity to a consumer and at the time a consumer applies for an extension of credit in connection with which and insurance product or annuity is solicited, offered, or sold.

Board of Governors of the Federal Reserve System, October 19, 2015.

**Robert deV. Frierson**

*Secretary of the Board.*

[FR Doc. 2015–26817 Filed 10–21–15; 8:45 am]

**BILLING CODE 6210–01–P**

## FEDERAL RETIREMENT THRIFT INVESTMENT BOARD

### Sunshine Act; Notice of ETAC Meeting

**MATTERS TO BE CONSIDERED**

**AGENDA**

*Employee Thrift Advisory Council*

October 29, 2015, 1:00 p.m., 10th Floor Board Meeting Room, 77 K Street NE., Washington, DC 20002.

1. Approval of the minutes of the August 6, 2015 ETAC meeting
2. Thrift Savings Fund Statistics
3. Auto Escalation
4. Choosing a Financial Vendor
5. Investment Policy
6. New Business

**CONTACT PERSON FOR MORE INFORMATION:** Kimberly Weaver, Director, Office of External Affairs, (202) 942–1640.

Dated: October 19, 2015.

**Megan Grumbine,**

*Deputy General Counsel, Federal Retirement Thrift Investment Board.*

[FR Doc. 2015–26941 Filed 10–20–15; 11:15 am]

**BILLING CODE 6760–01–P**

## DEPARTMENT OF HEALTH AND HUMAN SERVICES

### Centers for Disease Control and Prevention

**[Docket No. CDC–2015–0089]**

### Proposed Vaccine Information Materials for HPV (Human Papillomavirus) Gardasil®-9 Vaccine

**AGENCY:** Centers for Disease Control and Prevention (CDC), Department of Health and Human Services (HHS).

**ACTION:** Notice with comment period.

**SUMMARY:** Under the National Childhood Vaccine Injury Act (NCVIA) (42 U.S.C. 300aa–26), the Centers for Disease Control and Prevention (CDC) within the Department of Health and Human Services (HHS) develops vaccine information materials that all health care providers are required to give to patients/parents prior to administration of specific vaccines. HHS/CDC seeks written comment on the proposed vaccine information statement for HPV (human papillomavirus) Gardasil®-9 vaccine.

**DATES:** Written comments must be received on or before December 21, 2015.

**ADDRESSES:** You may submit comments, identified by Docket No. CDC–2015–0089, by any of the following methods:

• *Federal eRulemaking Portal: http://www.regulations.gov*. Follow the instructions for submitting comments.

• *Mail:* Written comments should be addressed to Suzanne Johnson-DeLeon (*msj1@cdc.gov*), National Center for Immunization and Respiratory Diseases, Centers for Disease Control and Prevention, Mailstop A–19, 1600 Clifton Road NE., Atlanta, Georgia 30329.

*Instructions:* All submissions received must include the agency name and docket number. All relevant comments received will be posted without change to *http://regulations.gov*, including any personal information provided. For access to the docket to read background documents or comments received, go to *http://www.regulations.gov*.

**FOR FURTHER INFORMATION CONTACT:** Skip Wolfe (*crw4@cdc.gov*), National Center for Immunization and Respiratory Diseases, Centers for Disease Control and Prevention, Mailstop A–19, 1600 Clifton Road NE., Atlanta, Georgia 30329.

**SUPPLEMENTARY INFORMATION:** The National Childhood Vaccine Injury Act of 1986 (Pub. L. 99–660), as amended by section 708 of Public Law 103–183, added section 2126 to the Public Health Service Act. Section 2126, codified at 42 U.S.C. 300aa–26, requires the Secretary of Health and Human Services to develop and disseminate vaccine information materials for distribution by all health care providers in the United States to any patient (or to the parent or legal representative in the case of a child) receiving vaccines covered under the National Vaccine Injury Compensation Program (VICP).

Development and revision of the vaccine information materials, also known as Vaccine Information Statements (VIS), have been delegated by the Secretary to the Centers for Disease Control and Prevention (CDC). Section 2126 requires that the materials be developed, or revised, after notice to the public, with a 60-day comment period, and in consultation with the Advisory Commission on Childhood Vaccines, appropriate health care provider and parent organizations, and the Food and Drug Administration. The law also requires that the information contained in the materials be based on available data and information, be presented in understandable terms, and include:

(1) A concise description of the benefits of the vaccine,

(2) A concise description of the risks associated with the vaccine,

(3) A statement of the availability of the National Vaccine Injury Compensation Program, and

(4) Such other relevant information as may be determined by the Secretary.

The vaccines initially covered under the National Vaccine Injury Compensation Program were diphtheria, tetanus, pertussis, measles, mumps, rubella and poliomyelitis vaccines. Since April 15, 1992, any health care provider in the United States who intends to administer one of these covered vaccines is required to provide copies of the relevant vaccine information materials prior to administration of any of these vaccines. Since then, the following vaccines have been added to the National Vaccine Injury Compensation Program, requiring use of vaccine information materials for them as well: Hepatitis B, *Haemophilus influenzae* type b (Hib), varicella (chickenpox), pneumococcal conjugate, rotavirus, hepatitis A, meningococcal, human papillomavirus (HPV), and seasonal influenza vaccines. Instructions for use of the vaccine information materials are found on the CDC Web site at: *http://www.cdc.gov/vaccines/hcp/vis/index.html*.

HHS/CDC is proposing to finalize the HPV (Human Papillomavirus) Gardasil®-9 vaccine information statement.

The vaccine information materials referenced in this notice are being developed in consultation with the Advisory Commission on Childhood Vaccines, the Food and Drug Administration, and parent and health care provider groups.

We invite written comment on the proposed vaccine information materials entitled ''Proposed Vaccine Information Materials for HPV (Human Papillomavirus) Gardasil®-9 Vaccine.'' Copies of the proposed vaccine information materials are available at *http://www.regulations.gov* (see Docket Number CDC–2015–0089). Comments submitted will be considered in finalizing these materials. When the final materials are published in the Federal Register, the notice will include an effective date for their mandatory use.

Dated: October 19, 2015.

**Sandra Cashman,**

*Acting Director, Division of the Executive Secretariat, Office of the Chief of Staff, Centers for Disease Control and Prevention.*

[FR Doc. 2015–26868 Filed 10–21–15; 8:45 am]

BILLING CODE 4163–18–P

## DEPARTMENT OF HEALTH AND HUMAN SERVICES

### Administration for Children and Families

### Proposed Information Collection Activity; Comment Request

*Proposed Projects:*

*Title:* Federal Tax Refund Offset, Administrative Offset, and Passport Denial.

*OMB No.:* 0970–0161.

*Description:* The Federal Offset programs (Federal Tax Refund Offset and Administrative Offset) collect past-due child and spousal support by intercepting certain Federal payments, including Federal tax refunds, of parents who have been ordered to pay support and are delinquent. The Federal Offset programs consist of a cooperative effort among the Department of the Treasury's Bureau of the Fiscal Service, the Federal Office of Child Support Enforcement (OCSE), and State child support agencies.

The Passport Denial program reports noncustodial parents who owe child and spousal support above a threshold to the Department of State, which will then deny passports.

On an ongoing basis, State child support agencies submit names, Social Security numbers, and the amount(s) of past-due child and spousal support of noncustodial parents who are delinquent in making payments to OCSE.

Federal laws authorize information collection activities pertaining to the Federal Offset and Passport Denial programs and require State child support agencies to submit information pertaining to past-due support that meets specific criteria and to comply with Annual Certification Letter requirements:

(1) 42 U.S.C. 652(b), 42 U.S.C. 664, and 26 U.S.C. 6402(c), for the offset of the Federal tax refund of the noncustodial parent;

(2) 31 U.S.C. 3701 *et seq.* and 31 U.S.C. 3716(h), for the offset of the Federal payments other than Federal tax refunds of the noncustodial parent; and

(3) 42 U.S.C. 654(31) and 42 U.S.C. 652(k), to Department of State for the denial, revocation, restriction, or limitation of the passport of the noncustodial parent.

*Respondents:* State Child Support Agencies.

ANNUAL BURDEN ESTIMATES

| Instrument | Number of respondents | Number of responses per respondent | Average burden hours per response | Total burden hours |
|---|---|---|---|---|
| Input Record | 54 | 52 | .3 | 842.4 |
| Output Record | 54 | 52 | .46 | 1291.7 |
| Payment File | 54 | 52 | .135 | 379.1 |
| Certification Letter | 54 | 1 | .4 | 21.6 |
| Portal Processing screens | 173 | 280.65 | .01 | 485.52 |
| Total | | | | 3,020 |

*Estimated Total Annual Burden Hours:* 3,020 hours

In compliance with the requirements of Section 506(c)(2)(A) of the Paperwork Reduction Act of 1995, the Administration for Children and Families is soliciting public comment on the specific aspects of the information collection described above. Copies of the proposed collection of information can be obtained and comments may be forwarded by writing to the Administration for Children and Families, Office of Planning, Research and Evaluation, 370 L'Enfant Promenade SW., Washington, DC 20447, Attn: ACF Reports Clearance Officer. Email address: *infocollection@acf.hhs.gov.* All requests should be identified by the title of the information collection.

The Department specifically requests comments on: (a) Whether the proposed collection of information is necessary for the proper performance of the functions of the agency, including whether the information shall have practical utility; (b) the accuracy of the agency's estimate of the burden of the proposed collection of information; (c) the quality, utility, and clarity of the information to be collected; and (d) ways to minimize the burden of the collection of information on respondents, including through the use of automated collection techniques or other forms of information technology. Consideration will be given to comments and suggestions submitted within 60 days of this publication.

**Robert Sargis,**

*Reports Clearance Officer.*

[FR Doc. 2015–26845 Filed 10–21–15; 8:45 am]

BILLING CODE 4184–01–P

## DEPARTMENT OF HEALTH AND HUMAN SERVICES

### Administration for Children and Families

### Proposed Information Collection Activity; Comment Request

**Proposed Projects**

*Title:* National Directory of New Hires.

*OMB No.:* 0970–0166.

*Description:* The National Directory of New Hires (NDNH) is a centralized directory maintained by the Federal Office of Child Support Enforcement. The information maintained in the NDNH is collected electronically and used to help child support agencies in locating parents and enforcing child support orders. Also, Congress authorized specific State and Federal agencies to receive NDNH information for authorized purposes to assist in administering certain programs. The NDNH is authorized under 42 U.S.C. 653(i)(1).

The information collection activities pertaining to the NDNH are authorized by:

(1) 42 U.S.C. 653A(b)(1)(A) and (B), requiring employers to report all newly-hired employees to the State Directory of New Hires (SDNH);

(2) 42 U.S.C. 653A(g)(2)(A), requiring every SDNH to transmit the new hire information to the NDNH within three business days of the data being entered in the SDNH;

(3) 26 U.S.C. 3304(a)(16)(B), requiring the reporting of wage and unemployment compensation information contained in the records of agencies administering the State program under part A of Title IV of the Social Security Act; and

(4) Requiring the quarterly reporting of wages and other compensation under—

- 42 U.S.C. 653A(g)(2)(B), by every SDNH; and
- 42 U.S.C. 503(h)(1)(A), by State agencies administering the State's unemployment laws.

*Respondents:* Employers, State IV–A Agencies, State Child Support Agencies, and State Workforce Agencies.

ANNUAL BURDEN ESTIMATES

| Instrument | Number of respondents | Rounded number of responses per respondent | Average burden hours per response | Total |
|---|---|---|---|---|
| New Hire: Employers Reporting Manually | 5,130,348 | 1.40 | .025 hours (1.5 minute) | 179,562.18 |
| New Hire: Employers Reporting Electronically. | 595,812 | 88.62 | .00028 hours (1 second) | 14,784.24 |
| New Hire: States | 54 | 133,333.33 | .016667 hours (1 minute) | 120,002.40 |
| QW & UI: States | 53 | 27.00 | .00028 hours (1 second) | 0.40 |
| Multistate Employer Form | 4,632 | 1.00 | .050 hours (3 minutes) | 231.60 |
| Estimate Total Annual Burden Hours | | | | 314,581 |

*Estimated Total Annual Burden Hours:* 314,581 hours.

In compliance with the requirements of Section 506(c)(2)(A) of the Paperwork Reduction Act of 1995, the Administration for Children and Families is soliciting public comment on the specific aspects of the

information collection described above. Copies of the proposed collection of information can be obtained and comments may be forwarded by writing to the Administration for Children and Families, Office of Planning, Research and Evaluation, 370 L'Enfant Promenade SW., Washington, DC 20447, Attn: ACF Reports Clearance Officer. Email address: *infocollection@acf.hhs.gov.* All requests should be identified by the title of the information collection.

The Department specifically requests comments on: (a) Whether the proposed collection of information is necessary for the proper performance of the functions of the agency, including whether the information shall have practical utility; (b) the accuracy of the agency's estimate of the burden of the proposed collection of information; (c) the quality, utility, and clarity of the information to be collected; and (d) ways to minimize the burden of the collection of information on respondents, including through the use of automated collection techniques or other forms of information technology. Consideration will be given to comments and suggestions submitted within 60 days of this publication.

**Robert Sargis,**

*Reports Clearance Officer.*

[FR Doc. 2015–26843 Filed 10–21–15; 8:45 am]

**BILLING CODE 4184–01–P**

## DEPARTMENT OF HEALTH AND HUMAN SERVICES

### Administration for Children and Families

### Submission for OMB Review; Comment Request

*Title:* Uniform Project Description (UPD) Program Narrative Format for Discretionary Grant Application Forms.

*OMB No.:* 0970–0139.

*Description:* The proposed information collection would renew the Administration for Children and Families (ACF) Uniform Project Description (UPD). The UPD provides a uniform grant application format for applicants to submit project information in response to ACF discretionary funding opportunity announcements. ACF uses this information, along with other OMB-approved information collections (Standard Forms), to evaluate and rank applications. Use of the UPD helps to protect the integrity of ACF's award selection process. All ACF discretionary grant programs are required to use this application format. The application consists of general information and instructions; the Standard Form 424 series, which requests basic information, budget information, and assurances; the Project Description that requests the applicant to describe how program objectives will be achieved; and other assurances and certifications. Guidance for the content of information requested in the Uniform Project Description is based in 45 CFR 75.203, 75.204, and 45 CFR part 75, Appendix I.

*Respondents:* Applicants to ACF Discretionary Funding Opportunity Announcements.

ANNUAL BURDEN ESTIMATES

| Instrument | Number of respondents | Number of responses per respondent | Average burden hours per response | Total burden hours |
|---|---|---|---|---|
| ACF Uniform Project Description (UPD) | 4,562 | 1 | 60 | 273,720 |

*Estimated Total Annual Burden Hours:* 273,720.

*Additional Information:* Copies of the proposed collection may be obtained by writing to the Administration for Children and Families, Office of Planning, Research and Evaluation, 370 L'Enfant Promenade, SW., Washington, DC 20447, Attn: ACF Reports Clearance Officer. All requests should be identified by the title of the information collection. Email address: *infocollection@acf.hhs.gov.*

*OMB Comment:* OMB is required to make a decision concerning the collection of information between 30 and 60 days after publication of this document in the **Federal Register**. Therefore, a comment is best assured of having its full effect if OMB receives it within 30 days of publication. Written comments and recommendations for the proposed information collection should be sent directly to the following: Office of Management and Budget, Paperwork Reduction Project, Email: *OIRA_SUBMISSION@OMB.EOP.GOV,* Attn: Desk Officer for the Administration for Children and Families.

**Robert Sargis,**

*Reports Clearance Officer.*

[FR Doc. 2015–26841 Filed 10–21–15; 8:45 am]

**BILLING CODE 4184–01–P**

## DEPARTMENT OF HEALTH AND HUMAN SERVICES

### Food and Drug Administration

**[Docket No. FDA–2015–D–3438]**

### Selection of the Appropriate Package Type Terms and Recommendations for Labeling Injectable Medical Products Packaged in Multiple-Dose, Single-Dose, and Single-Patient-Use Containers for Human Use; Draft Guidance for Industry; Availability

**AGENCY:** Food and Drug Administration, HHS.

**ACTION:** Notice.

**SUMMARY:** The Food and Drug Administration (FDA or Agency) is announcing the availability of a draft guidance for industry entitled ''Selection of the Appropriate Package Type Terms and Recommendations for Labeling Injectable Medical Products Packaged in Multiple-Dose, Single-Dose, and Single-Patient-Use Containers for Human Use.'' This guidance has been developed to provide industry with FDA's recommendations on the selection of appropriate package type terms and selection of appropriate discard statements for injectable medical products for human use, packaged in multiple-dose, single-dose, and single-patient-use containers. This guidance provides FDA's revised definitions for single-dose and multiple-dose containers, and introduces the definition of a new package type term, ''single-patient-use'' container. Marketing applications for such products include: New Drug Applications (NDAs), Abbreviated New Drug Applications (ANDAs), Biologics License Applications (BLAs), Premarket Approval Applications (PMAs), and Premarket Notifications under section 510(k) of the Federal Food, Drug, and Cosmetic Act (FD&C Act).

**DATES:** Although you can comment on any guidance at any time (see 21 CFR

10.115(g)(5)), to ensure that the Agency considers your comment on this draft guidance before it begins work on the final version of the guidance, submit either electronic or written comments on the draft guidance by December 21, 2015.

**ADDRESSES:** You may submit comments as follows:

**Electronic Submissions**

Submit electronic comments in the following way:

• *Federal eRulemaking Portal: http://www.regulations.gov.* Follow the instructions for submitting comments. Comments submitted electronically, including attachments, to *http://www.regulations.gov* will be posted to the docket unchanged. Because your comment will be made public, you are solely responsible for ensuring that your comment does not include any confidential information that you or a third party may not wish to be posted, such as medical information, your or anyone else's Social Security number, or confidential business information, such as a manufacturing process. Please note that if you include your name, contact information, or other information that identifies you in the body of your comments, that information will be posted on *http://www.regulations.gov.*

• If you want to submit a comment with confidential information that you do not wish to be made available to the public, submit the comment as a written/paper submission and in the manner detailed (see ''Written/Paper Submissions'' and ''Instructions'').

**Written/Paper Submissions**

Submit written/paper submissions as follows:

• Mail/Hand delivery/Courier (for written/paper submissions): Division of Dockets Management (HFA–305), Food and Drug Administration, 5630 Fishers Lane, Rm. 1061, Rockville, MD 20852.

• For written/paper comments submitted to the Division of Dockets Management, FDA will post your comment, as well as any attachments, except for information submitted, marked and identified, as confidential, if submitted as detailed in ''Instructions.''

*Instructions:* All submissions received must include the Docket No. FDA–2015–D–3438 for ''Selection of the Appropriate Package Type Terms and Recommendations for Labeling Injectable Medical Products Packaged in Multiple-Dose, Single-Dose, and Single-Patient-Use Containers for Human Use.'' Received comments will be placed in the docket and, except for those submitted as ''Confidential Submissions,'' publicly viewable at *http://www.regulations.gov* or at the Division of Dockets Management between 9 a.m. and 4 p.m., Monday through Friday.

• Confidential Submissions—To submit a comment with confidential information that you do not wish to be made publicly available, submit your comments only as a written/paper submission. You should submit two copies total. One copy will include the information you claim to be confidential with a heading or cover note that states ''THIS DOCUMENT CONTAINS CONFIDENTIAL INFORMATION''. The Agency will review this copy, including the claimed confidential information, in its consideration of comments. The second copy, which will have the claimed confidential information redacted/blacked out, will be available for public viewing and posted on *http://www.regulations.gov.* Submit both copies to the Division of Dockets Management. If you do not wish your name and contact information to be made publicly available, you can provide this information on the cover sheet and not in the body of your comments and you must identify this information as ''confidential.'' Any information marked as ''confidential'' will not be disclosed except in accordance with 21 CFR 10.20 and other applicable disclosure law. For more information about FDA's posting of comments to public dockets, see 80 FR 56469, September 18, 2015, or access the information at: *http://www.fda.gov/regulatoryinformation/dockets/default.htm.*

*Docket:* For access to the docket to read background documents or the electronic and written/paper comments received, go to *http://www.regulations.gov* and insert the docket number, found in brackets in the heading of this document, into the ''Search'' box and follow the prompts and/or go to the Division of Dockets Management, 5630 Fishers Lane, Rm. 1061, Rockville, MD 20852.

Submit written requests for single copies of the draft guidance to the Division of Drug Information, Center for Drug Evaluation and Research, Food and Drug Administration, 10001 New Hampshire Ave., Hillandale Building, 4th Floor, Silver Spring, MD 20993–0002. Send one self-addressed adhesive label to assist that office in processing your requests. See the **SUPPLEMENTARY INFORMATION** section for electronic access to the draft guidance document. The draft guidance may also be obtained from the Office of Communication, Outreach and Development, Center for Biologics Evaluation and Research (CBER), Food and Drug Administration, 10903 New Hampshire Ave., Bldg. 71, Rm. 3128, Silver Spring, MD 20993–0002. Send one self-addressed adhesive label to assist the office in processing your requests. The draft guidance may also be obtained by mail by calling CBER at 1–800–835–4709 or 240–402–8010. The draft guidance may also be obtained from the Office of the Center Director, Guidance and Policy Development, Center for Devices and Radiological Health, Food and Drug Administration, 10903 New Hampshire Ave., Bldg. 66, Rm. 5431, Silver Spring, MD 20993–0002. Send one self-addressed adhesive label to assist that office in processing your request.

**FOR FURTHER INFORMATION CONTACT:** Samia Nasr, Center for Drug Evaluation and Research, Food and Drug Administration, 10903 New Hampshire Ave., Silver Spring, MD 20993, 301–796–3409; or Stephen Ripley, Center for Biologics Evaluation and Research, 10903 New Hampshire Ave., Bldg. 71, Rm. 7301, Silver Spring, MD 20993, 240–402–8154.

**SUPPLEMENTARY INFORMATION:**

## I. Background

FDA is announcing the availability of a draft guidance for industry entitled ''Selection of the Appropriate Package Type Terms and Recommendations for Labeling Injectable Medical Products Packaged in Multiple-Dose, Single-Dose, and Single-Patient-Use Containers for Human Use.'' Unsafe injection practices, including the improper use of needles, syringes, and medication vials for more than one patient, threaten patient safety and have resulted in multiple blood borne bacterial and viral infection outbreaks. Bacterial infections have been transmitted to patients when single-dose containers were used improperly, the contents became contaminated and these contents were then administered to multiple patients. Failure to follow standard precautions and aseptic techniques has also been associated with several outbreaks of infections involving multiple-dose vials.

As part of its review of medical products, FDA clears or approves package type terms and discard statements as part of the labeling of injectable medical products. FDA believes that consistent use of correct package type terms and discard statements for injectable medical products for human use will promote their proper use and provide a foundation for educational efforts to reduce the transmission of blood borne pathogens.

This draft guidance is being issued consistent with FDA's good guidance practices regulation (21 CFR 10.115). The draft guidance, when finalized, will represent the current thinking of FDA on ''Selection of the Appropriate Package Type Terms and Recommendations for Labeling Injectable Medical Products Packaged in Multiple-Dose, Single-Dose, and Single-Patient-Use Containers for Human Use.'' It does not establish any rights for any person and is not binding on FDA or the public. You can use an alternative approach if it satisfies the requirements of the applicable statutes and regulations.

**II. Electronic Access**

Persons with access to the Internet may obtain the draft guidance at either *http://www.fda.gov/Drugs/GuidanceComplianceRegulatoryInformation/Guidances/default.htm* or *http://www.regulations.gov.*

**III. The Paperwork Reduction Act of 1995**

This guidance refers to previously approved collections of information that are subject to review by the Office of Management and Budget (OMB) under the Paperwork Reduction Act of 1995 (44 U.S.C. 3501–3520). The collections of information discussed in this draft guidance have been approved under OMB under the following control numbers: OMB control number 0910–0001 for NDAs, ANDAs, supplements to NDAs and ANDAs, and annual reports; OMB control number 0910–0572 for prescription drug product labeling; OMB control number 0910–0338 for BLA, BLA supplements and annual reports; OMB control number 0910–0120 for premarket notifications (510(k)s); OMB control number 0910–0231 for premarket approval applications (PMAs); OMB control number 0910–0485 for medical device labeling; and OMB control number 0910–0577 for prominent and conspicuous mark of manufacturers on single-use devices. Relevant to this collection of information, FDA published its proposed rule on the electronic distribution of prescribing information for human prescription drugs, including biological products in the **Federal Register** of December 18, 2014 (79 FR 75506). In Section VII, ''Paperwork Reduction Act of 1995,'' FDA estimated the burden to design, test, and produce the label for a drug product's immediate container and outer container or package, as set forth in 21 CFR part 201, including § 201.100(b) and other sections in subpart A and subpart B.

Dated: October 16, 2015.

**Leslie Kux,**

*Associate Commissioner for Policy.*

[FR Doc. 2015–26849 Filed 10–21–15; 8:45 am]

BILLING CODE 4164–01–P

---

## DEPARTMENT OF HEALTH AND HUMAN SERVICES

### National Institutes of Health

### Center for Scientific Review; Notice of Closed Meetings

Pursuant to section 10(d) of the Federal Advisory Committee Act, as amended (5 U.S.C. App.), notice is hereby given of the following meetings.

The meetings will be closed to the public in accordance with the provisions set forth in sections 552b(c)(4) and 552b(c)(6), Title 5 U.S.C., as amended. The grant applications and the discussions could disclose confidential trade secrets or commercial property such as patentable material, and personal information concerning individuals associated with the grant applications, the disclosure of which would constitute a clearly unwarranted invasion of personal privacy.

*Name of Committee:* Center for Scientific Review Special Emphasis Panel; Program Project: Molecular structure, dynamics, and mechanism of key membrane transporters and enzymes in cellular metabolism.

*Date:* November 17–18, 2015.

*Time:* 7:00 a.m. to 5:00 p.m.

*Agenda:* To review and evaluate grant applications.

*Place:* National Institutes of Health, 6701 Rockledge Drive, Bethesda, MD 20892, (Virtual Meeting).

*Contact Person:* Kathryn M. Koeller, Ph.D., Scientific Review Officer, Center for Scientific Review, National Institutes of Health, 6701 Rockledge Drive, Room 4166, MSC 7806, Bethesda, MD 20892, 301–435–2681, *koellerk@csr.nih.gov.*

*Name of Committee:* Center for Scientific Review Special Emphasis Panel; PAR13–189: Imaging and Biomarkers for Early Cancer Detection.

*Date:* November 17, 2015.

*Time:* 10:00 a.m. to 2:00 p.m.

*Agenda:* To review and evaluate grant applications.

*Place:* National Institutes of Health, 6701 Rockledge Drive, Bethesda, MD 20892, (Virtual Meeting).

*Contact Person:* Chiayeng Wang, Ph.D., Scientific Review Officer. Center for Scientific Review. 6701 Rockledge Drive, Room 5213, MSC 7852, Bethesda, MD 20892, 301–435–2397, *chiayeng.wang@nih.gov.*

*Name of Committee:* Center for Scientific Review Special Emphasis Panel; PAR–14–092: Bioengineering Research Partnerships (BRP).

*Date:* November 17, 2015.

*Time:* 11:00 a.m. to 5:00 p.m.

*Agenda:* To review and evaluate grant applications.

*Place:* National Institutes of Health, 6701 Rockledge Drive, Bethesda, MD 20892, (Virtual Meeting).

*Contact Person:* Mehrdad Mohseni, MD, Scientific Review Officer, Center for Scientific Review, National Institutes of Health, 6701 Rockledge Drive, Room 5211, MSC 7854, Bethesda, MD 20892, 301–435–0484, *mohsenim@csr.nih.gov.*

*Name of Committee:* Center for Scientific Review Special Emphasis Panel; AREA grant applications: Toxicology and Digestive, Kidney and Urological Systems.

*Date:* November 17, 2015.

*Time:* 11:30 a.m. to 2:00 p.m.

*Agenda:* To review and evaluate grant applications.

*Place:* National Institutes of Health, 6701 Rockledge Drive, Bethesda, MD 20892, (Telephone Conference Call).

*Contact Person:* Patricia Greenwel, Ph.D., Scientific Review Officer, Center for Scientific Review, National Institutes of Health, 6701 Rockledge Drive, Room 2178, MSC 7818, Bethesda, MD 20892, 301–435–1169, *greenwep@csr.nih.gov.*

*Name of Committee:* Center for Scientific Review Special Emphasis Panel; Small Business: Skeletal Muscle.

*Date:* November 17, 2015.

*Time:* 1:00 p.m. to 4:00 p.m.

*Agenda:* To review and evaluate grant applications.

*Place:* National Institutes of Health, 6701 Rockledge Drive, Bethesda, MD 20892, (Telephone Conference Call).

*Contact Person:* Richard Ingraham, Ph.D., Scientific Review Officer, Center for Scientific Review, National Institutes of Health, 6701 Rockledge Drive, Room 4116, MSC 7814, Bethesda, MD 20892, 301–496–8551, *ingrahamrh@mail.nih.gov.*

*Name of Committee:* Center for Scientific Review Special Emphasis Panel; Program Projects: New Modalities for the Treatment of Pain and Drug Abuse.

*Date:* November 17, 2015.

*Time:* 1:00 p.m. to 4:00 p.m.

*Agenda:* To review and evaluate grant applications.

*Place:* National Institutes of Health, 6701 Rockledge Drive, Bethesda, MD 20892, (Telephone Conference Call).

*Contact Person:* Geoffrey G. Schofield, Ph.D., Scientific Review Officer, Center for Scientific Review, National Institutes of Health, 6701 Rockledge Drive, Room 4040–A, MSC 7850, Bethesda, MD 20892, 301–435–1235, *geoffreys@csr.nih.gov.*

(Catalogue of Federal Domestic Assistance Program Nos. 93.306, Comparative Medicine; 93.333, Clinical Research, 93.306, 93.333, 93.337, 93.393–93.396, 93.837–93.844, 93.846-93.878, 93.892, 93.893, National Institutes of Health, HHS).

Dated: October 16, 2015.

**Anna Snouffer,**

*Deputy Director, Office of Federal Advisory Committee Policy.*

[FR Doc. 2015–26774 Filed 10–21–15; 8:45 am]

BILLING CODE 4140–01–P

## DEPARTMENT OF HOMELAND SECURITY

### Federal Emergency Management Agency

**[Docket ID FEMA–2015–0006]**

### Guidelines for Implementing Executive Order 11988, Floodplain Management, and Executive Order 13690, Establishing a Federal Flood Risk Management Standard and a Process for Further Soliciting and Considering Stakeholder Input

**AGENCY:** Federal Emergency Management Agency, DHS.

**ACTION:** Notice.

**SUMMARY:** This notice serves to inform the public that the Department of the Interior held a meeting of the interagency Water Resources Council on Thursday, October 8, 2015, in the John Muir Conference Room, 1849 C St. NW., Washington, DC 20240 at 10 a.m. EDT to consider the recommendations of the Mitigation Framework Leadership Group and vote on the issuance of revised ''Guidelines for Implementing Executive Order 11988, Floodplain Management, and Executive Order 13690, Establishing a Federal Flood Risk Management Standard and a Process for Further Soliciting and Considering Stakeholder Input.''

The Water Resources Council voted unanimously to accept the recommendations of the Mitigation Framework Leadership Group and issued Guidelines for Implementing Executive Order 11988, Floodplain Management, and Executive Order 13690, Establishing a Federal Flood Risk Management Standard and a Process for Further Soliciting and Considering Stakeholder Input, effective October 8, 2015.

**DATES:** *Effective Date:* October 8, 2015. Please consult the individual agency responsible for a program with questions regarding their time frames and processes for updating their implementing procedures for Executive Order 11988.

**FOR FURTHER INFORMATION CONTACT:** Roy Wright, Deputy Associate Administrator, Federal Insurance and Mitigation Administration, Department of Homeland Security, Federal Emergency Management Agency, 500 C Street SW., Washington, DC 20472, (202) 646–2781.

**SUPPLEMENTARY INFORMATION:** On January 30, 2015, the President signed Executive Order 13690, Establishing a Federal Flood Risk Management Standard and a Process for Further Soliciting and Considering Stakeholder Input, which amended Executive Order 11988, Floodplain Management, issued in 1977. Consistent with the President's direction, the Federal Emergency Management Agency, as Chair of the Mitigation Framework Leadership Group, published for public comment in the **Federal Register** Draft Guidelines to provide guidance to agencies on the implementation of Executive Orders 13690 and 11988 (80 FR 6530, February 5, 2015). After an extension, the public comment period lasted 90 days, during which Federal Emergency Management Agency and other members of the Mitigation Framework Leadership Group held eight in-person public listening sessions across the country and one public webinar, to ensure input from stakeholders and the public.

This notice serves to inform the public that the Department of the Interior held a meeting of the interagency Water Resources Council on Thursday, October 8, 2015, in the John Muir Conference Room, 1849 C St. NW., Washington, DC 20240 at 10 a.m. EDT to consider the recommendations of the Mitigation Framework Leadership Group and vote on the issuance of revised ''Guidelines for Implementing Executive Order 11988, Floodplain Management, and Executive Order 13690, Establishing a Federal Flood Risk Management Standard and a Process for Further Soliciting and Considering Stakeholder Input.''

The Water Resources Council voted unanimously to accept the recommendations of the Mitigation Framework Leadership Group and issued Guidelines for Implementing Executive Order 11988, Floodplain Management, and Executive Order 13690, Establishing a Federal Flood Risk Management Standard and a Process for Further Soliciting and Considering Stakeholder Input, effective October 8, 2015.

The Implementing Guidelines are in the docket for this Notice on *www.regulations.gov,* under Docket ID FEMA–2015–0006.

**Authority:** Executive Order 11988, Floodplain Management, as amended.

Dated: October 15, 2015.

**Roy E. Wright,**

*Deputy Associate Administrator, Federal Insurance and Mitigation Administration, Department of Homeland Security, Federal Emergency Management Agency.*

[FR Doc. 2015–26839 Filed 10–21–15; 8:45 am]

BILLING CODE 9110–12–P

## DEPARTMENT OF THE INTERIOR

### Fish and Wildlife Service

**[Docket No. FWS–HQ–IA–2015–0157; FXIA16710900000–156–FF09A300000]**

### Draft Environmental Assessment; Dallas Zoo Management; Dallas, Texas

**AGENCY:** Fish and Wildlife Service, Interior.

**ACTION:** Notice of availability; request for public comments.

**SUMMARY:** We, the U.S. Fish and Wildlife Service, make available the draft environmental assessment under the National Environmental Policy Act regarding a permit application submitted by Dallas Zoo Management, on behalf of the Dallas Zoo, Sedgwick County Zoo, and Omaha's Henry Doorly Zoo. The three zoos are requesting authorization under the Convention on International Trade in Endangered Species of Wild Fauna and Flora to import 18 live African elephants from Swaziland.

**DATES:** To ensure consideration, written comments must be received or postmarked on or before November 23, 2015. Comments submitted electronically using the Federal eRulemaking Portal (see ADDRESSES) must be received by 11:59 p.m. Eastern Time on the closing date. Any comments that we receive after the closing date may not be considered.

**ADDRESSES:**

#### Availability of Documents

*Internet:* You may obtain copies of the draft environmental assessment and related documents by going to the Federal e-Rulemaking Portal: *http://www.regulations.gov.* In the Search box, enter FWS–HQ–IA–2015–0157, which is the docket number for this notice. Click the ''Open Docket Folder'' link.

*In-Person:* Copies of the draft environmental assessment are also available for public inspection and review at the following location, by appointment and written request only, 8 a.m. to 4:30 p.m.: U.S. Fish and Wildlife Service, Division of Management Authority, 5275 Leesburg Pike, Falls Church, VA 22041.

*Comment submission:* You may submit written comments on the draft environmental assessment by one of the following methods:

*Internet:* Go to the Federal e-Rulemaking Portal: *http://www.regulations.gov.* In the Search box, enter FWS–HQ–IA–2015–0157, which is the docket number for this notice. Click the ''Open Docket Folder'' link. Click

the ''Open Docket Folder'' link. Click ''Comment Now!'' to comment.

*U.S. mail or hand-delivery:* Public Comments Processing, Attn: FWS–HQ–IA–2015–0157; Division of Policy, Performance, and Management Programs; U.S. Fish and Wildlife Service; 5275 Leesburg Pike, MS: BPHC; Falls Church, VA 22041–3803. We request that you send comments by only one of the methods described above. All information received will be posted on *http://www.regulations.gov.* This generally means that we will post any personal information you provide us (see the Public Availability of Comments section for more information).

**FOR FURTHER INFORMATION CONTACT:** Timothy Van Norman, Chief, Branch of Permits, Division of Management Authority, 5275 Leesburg Pike, MS–IA, Falls Church, VA 22041; or by phone at (703) 358–2350.

**SUPPLEMENTARY INFORMATION:** We make available the draft environmental assessment (EA) under the National Environmental Policy Act of 1969 (NEPA) (42 U.S.C. 4321 *et seq.*) for an application submitted by Dallas Zoo Management for a permit to import 18 live African elephants from Swaziland. If the importation is authorized, and the elephants are imported, the elephants will be housed at the Dallas Zoo, Dallas, Texas; Sedgwick County Zoo, Wichita, Kansas; and Omaha's Henry Doorly Zoo, Omaha, Nebraska. The requested permit, if granted, would authorize the importation, under the Convention on International Trade in Endangered Species of Wild Fauna and Flora (CITES) (27 U.S.T. 1087) of 3 adult females, 3 subadult males, and 12 subadult females. CITES is an international treaty designed to regulate international trade in certain animal and plant species that are affected by trade and are now, or potentially may become, threatened with extinction. These species are listed in the Appendices to CITES, which are available on the CITES Secretariat's Web site at *http://www.cites.org.* African elephants in Swaziland are listed in CITES Appendix I. The Service's regulations implementing CITES are found at 50 CFR part 23.

The African elephant is also classified as threatened under the U.S. Endangered Species Act (ESA) (16 U.S.C. 1531 *et seq.*), with a rule under Section 4(d) of the ESA 50 CFR 17.40(e). To import African elephants into the United States, ESA and CITES requirements must be met. Pursuant to the ESA 4(d) rule for the African elephant (50 CFR 17.40(e)(3)(i)), live elephants may be imported if all requirements under Service regulations at 50 CFR part 13 (general permitting) and 50 CFR part 23 (CITES) are met.

Issuance of a CITES import permit is categorically excluded under Department of the Interior internal agency policy and procedures from requiring completion of an EA under NEPA (Departmental Manual Part 516, Chapter 8.5(C)(1)). However, we have decided to prepare a draft EA in this case to help ensure that we have conducted a thorough review of all relevant factors and potential impacts on the quality of the human environment as envisioned under NEPA.

The draft EA considers the direct, indirect, and cumulative effects of the importation of 18 live elephants from Swaziland, including the measures that would be implemented to minimize and mitigate the impacts of the importation and housing of these animals.

## Proposed Action

The proposed action is the issuance of a CITES permit by the Service for the importation of 18 African elephants from Swaziland. The elephants are currently housed in an enclosure at the Mkhaya Game Reserve, Swaziland. The elephants were removed from Mkhaya Game Reserve and Hlane National Park, Swaziland, due to overpopulation of elephants within the two protected areas and the negative impact the elephants were having on the vegetation and other wildlife species. Big Game Parks (BPG), the delegated authority responsible for implementation of Swaziland's Game Act of 1953, has determined that the number of elephants in the two protected areas must be reduced. Further, the reduction in the number of elephants within each of the protected areas will facilitate BGP's efforts to increase the population of black rhinoceros (*Diceros bicornis*), a critically endangered species, within the two protected areas.

## Alternatives

We are also considering two alternatives to the proposed action:

1. No Action—No CITES import permit would be issued. According to the applicant and BGP, the 18 elephants will not be returned to the two protected areas. Instead, if importation is not authorized, BGP has stated that they have no option but to cull the animals.

2. Issue a CITES import permit for a reduced number of elephants—This alternative is similar to the Proposed Action, in that the Service would issue an import permit, but the number of elephants authorized for import would be reduced. This could result in some elephants being imported into the United States and housed at one or more of the three zoos. However, according to the applicant and BGP, the elephants that are not imported into the United States would be culled.

## Public Availability of Comments

Written comments that we receive become part of the public record associated with this action. Before including your address, phone number, email address, or other personal identifying information in your comment, you should be aware that your entire comment—including your personal identifying information—may be made publicly available at any time. While you may request in your comment that we withhold your personal identifying information from public review, we cannot guarantee that we will be able to do so. We will not consider anonymous comments. All submissions from organizations or businesses, and from individuals identifying themselves as representatives or officials of organizations or businesses, will be made available for public disclosure in their entirety.

## Authority

We provide this notice under NEPA and its implementing regulations (40 CFR 1506.6).

**Brenda Tapia,**

*Program Analyst/Data Administrator, Branch of Permits, Division of Management Authority.*

[FR Doc. 2015–26834 Filed 10–21–15; 8:45 am]

BILLING CODE 4333–15–P

---

# DEPARTMENT OF THE INTERIOR

## Bureau of Land Management

**[LLES962000 L14200000.B0000 15X]**

## Eastern States: Filing of Plats of Survey

**AGENCY:** Bureau of Land Management, Interior.

**ACTION:** Notice of Filing of Plats of Survey; Maryland.

**SUMMARY:** The Bureau of Land Management (BLM) will officially file the plats of survey of the lands described below in the BLM-Eastern States Office, Washington DC at least 30 calendar days from the date of publication in the **Federal Register**.

**FOR FURTHER INFORMATION CONTACT:** Bureau of Land Management, Eastern States Office, 20 M Street SE., Washington DC, 20003. Attn: Cadastral

Survey. Persons who use a telecommunications device for the deaf (TDD) may call the Federal Information Relay Service (FIRS) at 1–800–877–8339 to contact the above individual during normal business hours. The FIRS is available 24 hours a day, 7 days a week, to leave a message or question with the above individual. You will receive a reply during normal business hours.

**SUPPLEMENTARY INFORMATION:** This survey was requested by the Bureau of Land Management.

The lands surveyed are:

**Charles County, Maryland**

The plat of survey represents the dependent resurvey of the northerly boundary of the Douglas Point Property, described as parcel ''A'' in the Special Warranty Deed recorded in Liber 3414, Folio 315 of the land records of Charles County, in the State of Maryland.

We will place a copy of the plats we described in the open files. They will be available to the public as a matter of information.

If BLM receives a protest against these surveys, as shown on the plats, prior to the date of the official filing, we will stay the filing pending our consideration of the protest.

We will not officially file the plats until the day after we have accepted or dismissed all protests and they have become final, including decisions on appeals.

Dated: October 15, 2015.

**Dominica VanKoten,**

*Chief Cadastral Surveyor.*

[FR Doc. 2015–26851 Filed 10–21–15; 8:45 am]

**BILLING CODE P**

## DEPARTMENT OF THE INTERIOR

### Bureau of Land Management

**[LLOR957000–L14400000–BJ0000–16XL1109AF: HAG 16–0024]**

### Filing of Plats of Survey: Oregon/Washington

**AGENCY:** Bureau of Land Management, Interior.

**ACTION:** Notice.

**SUMMARY:** The plats of survey of the following described lands are scheduled to be officially filed in the Bureau of Land Management, Oregon State Office, Portland, Oregon, 30 days from the date of this publication.

**Willamette Meridian**

*Oregon*

T. 38 S., R. 3 E., accepted September 16, 2015
Tps. 32 & 33 S., R. 3 W., accepted September 16, 2015
T. 10 S., R. 4 E., accepted September 16, 2015
T. 23 S., R. 8 W., accepted September 16, 2015
T. 32 S., R. 3 W., accepted September 16, 2015

**ADDRESSES:** A copy of the plats may be obtained from the Public Room at the Bureau of Land Management, Oregon State Office, 1220 SW. 3rd Avenue, Portland, Oregon 97204, upon required payment.

**FOR FURTHER INFORMATION CONTACT:** Kyle Hensley, (503) 808–6132, Branch of Geographic Sciences, Bureau of Land Management, 1220 SW. 3rd Avenue, Portland, Oregon 97204. Persons who use a telecommunications device for the deaf (TDD) may call the Federal Information Relay Service (FIRS) at 1–800–877–8339 to contact the above individual during normal business hours. The FIRS is available 24 hours a day, 7 days a week, to leave a message or question with the above individual. You will receive a reply during normal business hours.

**SUPPLEMENTARY INFORMATION:** A person or party who wishes to protest against this survey must file a written notice with the Oregon State Director, Bureau of Land Management, stating that they wish to protest. A statement of reasons for a protest may be filed with the notice of protest and must be filed with the Oregon State Director within thirty days after the protest is filed. If a protest against the survey is received prior to the date of official filing, the filing will be stayed pending consideration of the protest. A plat will not be officially filed until the day after all protests have been dismissed or otherwise resolved. Before including your address, phone number, email address, or other personally identifying information in your comment, you should be aware that your entire comment—including your personally identifying information—may be made publicly available at any time. While you can ask us in your comment to withhold your personally identifying information from public review, we cannot guarantee that we will be able to do so.

**Mary J.M. Hartel,**

*Chief Cadastral Surveyor of Oregon/Washington.*

[FR Doc. 2015–26951 Filed 10–21–15; 8:45 am]

**BILLING CODE 4310–33–P**

## INTERNATIONAL TRADE COMMISSION

### Notice of Receipt of Complaint; Solicitation of Comments Relating to the Public Interest

**AGENCY:** U.S. International Trade Commission.

**ACTION:** Notice.

**SUMMARY:** Notice is hereby given that the U.S. International Trade Commission has received a complaint entitled *Certain Air Mattress Systems, Components Thereof, and Methods of Using the Same, DN 3091;* the Commission is soliciting comments on any public interest issues raised by the complaint or complainant's filing under section 210.8(b) of the Commission's Rules of Practice and Procedure (19 CFR 210.8(b)).

**FOR FURTHER INFORMATION CONTACT:** Lisa R. Barton, Secretary to the Commission, U.S. International Trade Commission, 500 E Street SW., Washington, DC 20436, telephone (202) 205–2000. The public version of the complaint can be accessed on the Commission's Electronic Document Information System (EDIS) at EDIS,[1] and will be available for inspection during official business hours (8:45 a.m. to 5:15 p.m.) in the Office of the Secretary, U.S. International Trade Commission, 500 E Street SW., Washington, DC 20436, telephone (202) 205–2000.

General information concerning the Commission may also be obtained by accessing its Internet server at United States International Trade Commission (USITC) at USITC.[2] The public record for this investigation may be viewed on the Commission's Electronic Document Information System (EDIS) at EDIS.[3] Hearing-impaired persons are advised that information on this matter can be obtained by contacting the Commission's TDD terminal on (202) 205–1810.

**SUPPLEMENTARY INFORMATION:** The Commission has received a complaint and a submission pursuant to section 210.8(b) of the Commission's Rules of Practice and Procedure filed on behalf of Select Comfort Corporation and Select Comfort SC Corporation on October 16, 2015. The complaint alleges violations of section 337 of the Tariff Act of 1930 (19 U.S.C. 1337) in the importation into the United States, the sale for importation, and the sale within

[1] Electronic Document Information System (EDIS): *http://edis.usitc.gov.*

[2] United States International Trade Commission (USITC): *http://edis.usitc.gov.*

[3] Electronic Document Information System (EDIS): *http://edis.usitc.gov.*

the United States after importation of certain air mattress systems, components thereof, and methods of using the same. The complaint names as respondents Sizewise Rentals LLC of Kansas City, MO; American National Manufacturing Inc. of Corona, CA; Dires LLC of Orlando, FL; and Personal Comfort Beds of Orlando, FL. The complainant requests that the Commission issue a limited exclusion order, cease and desist orders, and a bond upon respondents' alleged infringing articles during the 60-day Presidential review period pursuant to 19 U.S.C. 1337(j).

Proposed respondents, other interested parties, and members of the public are invited to file comments, not to exceed five (5) pages in length, inclusive of attachments, on any public interest issues raised by the complaint or section 210.8(b) filing. Comments should address whether issuance of the relief specifically requested by the complainant in this investigation would affect the public health and welfare in the United States, competitive conditions in the United States economy, the production of like or directly competitive articles in the United States, or United States consumers.

In particular, the Commission is interested in comments that:

(i) Explain how the articles potentially subject to the requested remedial orders are used in the United States;

(ii) identify any public health, safety, or welfare concerns in the United States relating to the requested remedial orders;

(iii) identify like or directly competitive articles that complainant, its licensees, or third parties make in the United States which could replace the subject articles if they were to be excluded;

(iv) indicate whether complainant, complainant's licensees, and/or third party suppliers have the capacity to replace the volume of articles potentially subject to the requested exclusion order and/or a cease and desist order within a commercially reasonable time; and

(v) explain how the requested remedial orders would impact United States consumers.

Written submissions must be filed no later than by close of business, eight calendar days after the date of publication of this notice in the **Federal Register**.There will be further opportunities for comment on the public interest after the issuance of any final initial determination in this investigation.

Persons filing written submissions must file the original document electronically on or before the deadlines stated above and submit 8 true paper copies to the Office of the Secretary by noon the next day pursuant to section 210.4(f) of the Commission's Rules of Practice and Procedure (19 CFR 210.4(f)). Submissions should refer to the docket number (''Docket No. 3091'') in a prominent place on the cover page and/or the first page. (*See* Handbook for Electronic Filing Procedures, Electronic Filing Procedures [4]). Persons with questions regarding filing should contact the Secretary (202–205–2000).

Any person desiring to submit a document to the Commission in confidence must request confidential treatment. All such requests should be directed to the Secretary to the Commission and must include a full statement of the reasons why the Commission should grant such treatment. *See* 19 CFR 201.6. Documents for which confidential treatment by the Commission is properly sought will be treated accordingly. All nonconfidential written submissions will be available for public inspection at the Office of the Secretary and on EDIS.[5]

This action is taken under the authority of section 337 of the Tariff Act of 1930, as amended (19 U.S.C. 1337), and of sections 201.10 and 210.8(c) of the Commission's Rules of Practice and Procedure (19 CFR 201.10, 210.8(c)).

By order of the Commission.
Issued: October 16, 2015.

**Lisa R. Barton,**

*Secretary to the Commission.*

[FR Doc. 2015–26816 Filed 10–21–15; 8:45 am]

BILLING CODE 7020–02–P

[4] Handbook for Electronic Filing Procedures: *http://www.usitc.gov/secretary/fed_reg_notices/rules/handbook_on_electronic_filing.pdf*

[5] Electronic Document Information System (EDIS): *http://edis.usitc.gov*

## INTERNATIONAL TRADE COMMISSION

### Notice of Receipt of Complaint; Solicitation of Comments Relating to the Public Interest

**AGENCY:** U.S. International Trade Commission.

**ACTION:** Notice.

**SUMMARY:** Notice is hereby given that the U.S. International Trade Commission has received a complaint entitled *Certain Automated Teller Machines, ATM Modules, Components Thereof, and Products Containing the Same, DN 3092;* the Commission is soliciting comments on any public interest issues raised by the complaint or complainant's filing under section 210.8(b) of the Commission's Rules of Practice and Procedure (19 CFR 210.8(b)).

**FOR FURTHER INFORMATION CONTACT:** Lisa R. Barton, Secretary to the Commission, U.S. International Trade Commission, 500 E Street SW., Washington, DC 20436, telephone (202) 205–2000. The public version of the complaint can be accessed on the Commission's Electronic Document Information System (EDIS) at EDIS,[1] and will be available for inspection during official business hours (8:45 a.m. to 5:15 p.m.) in the Office of the Secretary, U.S. International Trade Commission, 500 E Street SW., Washington, DC 20436, telephone (202) 205–2000.

General information concerning the Commission may also be obtained by accessing its Internet server at United States International Trade Commission (USITC) at USITC.[2] The public record for this investigation may be viewed on the Commission's Electronic Document Information System (EDIS) at EDIS.[3] Hearing-impaired persons are advised that information on this matter can be obtained by contacting the Commission's TDD terminal on (202) 205–1810.

**SUPPLEMENTARY INFORMATION:** The Commission has received a complaint and a submission pursuant to section 210.8(b) of the Commission's Rules of Practice and Procedure filed on behalf of Diebold, Incorporated and Diebold Self-Service Systems on October 19, 2015. The complaint alleges violations of section 337 of the Tariff Act of 1930 (19 U.S.C. 1337) in the importation into the United States, the sale for importation, and the sale within the United States after importation of certain automated teller machines, ATM modules, components thereof, and products containing the same. The complaint names as respondents Nautilus Hyosung Inc. of South Korea; Nautilus Hyosung America Inc. of Irving, TX; and HS Global, Inc. of Brea, CA. The complainant requests that the Commission issue a limited exclusion order, and cease and desist orders.

Proposed respondents, other interested parties, and members of the public are invited to file comments, not to exceed five (5) pages in length, inclusive of attachments, on any public interest issues raised by the complaint

[1] Electronic Document Information System (EDIS): *http://edis.usitc.gov.*

[2] United States International Trade Commission (USITC): *http://edis.usitc.gov.*

[3] Electronic Document Information System (EDIS): *http://edis.usitc.gov.*

or section 210.8(b) filing. Comments should address whether issuance of the relief specifically requested by the complainant in this investigation would affect the public health and welfare in the United States, competitive conditions in the United States economy, the production of like or directly competitive articles in the United States, or United States consumers.

In particular, the Commission is interested in comments that:

(i) Explain how the articles potentially subject to the requested remedial orders are used in the United States;

(ii) identify any public health, safety, or welfare concerns in the United States relating to the requested remedial orders;

(iii) identify like or directly competitive articles that complainant, its licensees, or third parties make in the United States which could replace the subject articles if they were to be excluded;

(iv) indicate whether complainant, complainant's licensees, and/or third party suppliers have the capacity to replace the volume of articles potentially subject to the requested exclusion order and/or a cease and desist order within a commercially reasonable time; and

(v) explain how the requested remedial orders would impact United States consumers.

Written submissions must be filed no later than by close of business, eight calendar days after the date of publication of this notice in the **Federal Register**. There will be further opportunities for comment on the public interest after the issuance of any final initial determination in this investigation.

Persons filing written submissions must file the original document electronically on or before the deadlines stated above and submit 8 true paper copies to the Office of the Secretary by noon the next day pursuant to section 210.4(f) of the Commission's Rules of Practice and Procedure (19 CFR 210.4(f)). Submissions should refer to the docket number (''Docket No. 3092'') in a prominent place on the cover page and/or the first page. (*See* Handbook for Electronic Filing Procedures, Electronic Filing Procedures [4]). Persons with questions regarding filing should contact the Secretary (202–205–2000).

Any person desiring to submit a document to the Commission in confidence must request confidential treatment. All such requests should be directed to the Secretary to the Commission and must include a full statement of the reasons why the Commission should grant such treatment. *See* 19 CFR 201.6. Documents for which confidential treatment by the Commission is properly sought will be treated accordingly. All nonconfidential written submissions will be available for public inspection at the Office of the Secretary and on *EDIS.*[5]

This action is taken under the authority of section 337 of the Tariff Act of 1930, as amended (19 U.S.C. 1337), and of sections 201.10 and 210.8(c) of the Commission's Rules of Practice and Procedure (19 CFR 201.10, 210.8(c)).

By order of the Commission.

Issued: October 19, 2015.

**Lisa R. Barton,**

*Secretary to the Commission.*

[FR Doc. 2015–26870 Filed 10–21–15; 8:45 am]

**BILLING CODE 7020–02–P**

## DEPARTMENT OF LABOR

### Employment and Training Administration

### Investigations Regarding Eligibility To Apply for Worker Adjustment Assistance

Petitions have been filed with the Secretary of Labor under Section 221 (a) of the Trade Act of 1974 (''the Act'') and are identified in the Appendix to this notice. Upon receipt of these petitions, the Director of the Office of Trade Adjustment Assistance, Employment and Training Administration, has instituted investigations pursuant to Section 221 (a) of the Act.

The purpose of each of the investigations is to determine whether the workers are eligible to apply for adjustment assistance under Title II, Chapter 2, of the Act. The investigations will further relate, as appropriate, to the determination of the date on which total or partial separations began or threatened to begin and the subdivision of the firm involved.

The petitioners or any other persons showing a substantial interest in the subject matter of the investigations may request a public hearing, provided such request is filed in writing with the Director, Office of Trade Adjustment Assistance, at the address shown below, not later than November 2, 2015.

Interested persons are invited to submit written comments regarding the subject matter of the investigations to the Director, Office of Trade Adjustment Assistance, at the address shown below, not later than November 2, 2015.

The petitions filed in this case are available for inspection at the Office of the Director, Office of Trade Adjustment Assistance, Employment and Training Administration, U.S. Department of Labor, Room N–5428, 200 Constitution Avenue NW., Washington, DC 20210.

Signed at Washington, DC this 17th day of September 2015.

**Hope D. Kinglock,**

*Certifying Officer, Office of Trade Adjustment Assistance.*

## APPENDIX

97 TAA PETITIONS INSTITUTED BETWEEN 8/25/15 AND 9/11/15

| TA–W | Subject firm (petitioners) | Location | Date of institution | Date of petition |
|---|---|---|---|---|
| 90145 | MasterCard Worldwide (State/One-Stop) | Purchase, NY | 08/26/15 | 08/12/15 |
| 90146 | Alcoa (State/One-Stop) | Lake Charles, LA | 08/26/15 | 08/17/15 |
| 90147 | Exterran Energy Solutions LP (State/One-Stop) | Broken Arrow, OK | 08/26/15 | 08/17/15 |
| 90148 | Molycorp Minerals LLC (Company) | Mountain Pass, CA | 08/26/15 | 08/20/15 |
| 90149 | US Green Fiber (State/One-Stop) | Hagaman, NY | 08/26/15 | 08/20/15 |
| 90150 | Barnes Aerospace/Barnes Group Inc. (State/One-Stop) | Windsor, CT | 08/26/15 | 08/20/15 |
| 90151 | Sherwood Valve LLC (Union) | Washington, PA | 08/26/15 | 08/19/15 |
| 90152 | Micro Pneumatic Logic Inc. (Company) | Pompano Beach, FL | 08/26/15 | 08/19/15 |
| 90153 | Ericsson (State/One-Stop) | Overland Park, KS | 08/26/15 | 08/21/15 |

[4] Handbook for Electronic Filing Procedures: *http://www.usitc.gov/secretary/fed_reg_notices/rules/handbook_on_electronic_filing.pdf.*

[5] Electronic Document Information System (EDIS): *http://edis.usitc.gov.*

97 TAA PETITIONS INSTITUTED BETWEEN 8/25/15 AND 9/11/15—Continued

| TA–W | Subject firm (petitioners) | Location | Date of institution | Date of petition |
|---|---|---|---|---|
| 90154 | AVA Design (Workers) | New York, NY | 08/27/15 | 08/22/15 |
| 90155 | Donaldson Company (Workers) | Cresco, IA | 08/27/15 | 08/24/15 |
| 90156 | Boston Scientific (Company) | San Jose, CA | 08/27/15 | 08/24/15 |
| 90157 | LA Darling (State/One-Stop) | Corning, AR | 08/27/15 | 08/24/15 |
| 90158 | Steeltek Inc. (State/One-Stop) | Tulsa, OK | 08/27/15 | 08/24/15 |
| 90159 | Cyclonic Valve Company Inc. (State/One-Stop) | Broken Arrow, OK | 08/27/15 | 08/24/15 |
| 90160 | Baker Hughes (State/One-Stop) | Clinton, OK | 08/27/15 | 08/24/15 |
| 90161 | Boardman LLC (State/One-Stop) | Wichita, KS | 08/27/15 | 08/24/15 |
| 90162 | NCO Financial (State/One-Stop) | Lenexa, KS | 08/27/15 | 08/24/15 |
| 90163 | Donaldson Company, Inc. (Union) | Grinnell, IA | 08/27/15 | 08/17/15 |
| 90164 | Bayside Recycling Corporation (Workers) | Duluth, MN | 08/27/15 | 07/27/15 |
| 90165 | Retro Systems (State/One-Stop) | Valley Center, KS | 08/27/15 | 08/26/15 |
| 90166 | GE/Dresser Flow & Process Technologies (Union) | Avon, MA | 08/27/15 | 08/17/15 |
| 90167 | International Business Machines (IBM) (State/One-Stop) | Seattle, WA | 08/27/15 | 08/26/15 |
| 90168 | Transamerica Life Insurance Company (State/One-Stop) | Los Angeles, CA | 08/27/15 | 08/26/15 |
| 90169 | Bradford Supply Company (State/One-Stop) | Robinson, IL | 08/27/15 | 08/18/15 |
| 90170 | Startek (State/One-Stop) | Greenwood Village, CO | 08/27/15 | 08/13/15 |
| 90171 | Hewlett-Packard Company (State/One-Stop) | Palo Alto, CA | 08/28/15 | 08/25/15 |
| 90172 | Maxim Integrated Programs, Inc. (State/One-Stop) | Dallas, TX | 08/28/15 | 08/24/15 |
| 90173 | Diamond Power (Workers) | Lancaster, OH | 08/28/15 | 08/18/15 |
| 90174 | Hallmark Cards (State/One-Stop) | Kansas City, MO | 08/28/15 | 08/25/15 |
| 90175 | Universal Well Services (Workers) | Bradford, PA | 08/28/15 | 08/26/15 |
| 90176 | NCI (Workers) | Dallas, TX | 08/28/15 | 08/19/15 |
| 90177 | Lufkin Industries, LLC—Foundry (Workers) | Lufkin, TX | 08/28/15 | 08/14/15 |
| 90178 | Wingspan (State/One-Stop) | Monroe, LA | 08/31/15 | 08/28/15 |
| 90179 | Leedon Webbing Company Inc (State/One-Stop) | Central Falls, RI | 08/31/15 | 08/28/15 |
| 90180 | The Results Companies (State/One-Stop) | Lawrence, KS | 08/31/15 | 08/28/15 |
| 90181 | Bradken (State/One-Stop) | Atchison, KS | 08/31/15 | 08/27/15 |
| 90182 | Convergys (State/One-Stop) | Wichita, KS | 08/31/15 | 08/27/15 |
| 90183 | Milestone AV Technologies (State/One-Stop) | Wichita, KS | 08/31/15 | 08/27/15 |
| 90184 | Century Aluminum (State/One-Stop) | Hawesville, KY | 08/31/15 | 08/28/15 |
| 90185 | Orchard Brands, Blair LLC (Workers) | Warren, PA | 08/31/15 | 08/27/15 |
| 90186 | Grays Harbor Community Hospital (East Campus) (Union) | Aberdeen, WA | 08/31/15 | 08/26/15 |
| 90187 | International Paper (State/One-Stop) | Memphis, TN | 08/31/15 | 08/27/15 |
| 90188 | AXA Equitable Life Insurance Company (State/One-Stop) | Syracus, NY | 08/31/15 | 08/28/15 |
| 90189 | Runnells Specialized Hospital (Workers) | Berkeley Heights, NJ | 09/01/15 | 08/24/15 |
| 90190 | Teleflex Incorporated (Union) | Reading, PA | 09/01/15 | 08/25/15 |
| 90191 | Sun Mt Sports (Workers) | Missoula, MT | 09/01/15 | 07/03/15 |
| 90192 | Frontier Airlines (State/One-Stop) | Denver, CO | 09/01/15 | 08/27/15 |
| 90193 | Bishop Fixture & Millwork (Workers) | Balsam Lake, WI | 09/01/15 | 08/20/15 |
| 90194 | Stomaco Energy Services, Inc. (Workers) | Kilgore, TX | 09/01/15 | 08/03/15 |
| 90195 | Peel Technologies, Inc. (State/One-Stop) | Mountain View, CA | 09/01/15 | 08/27/15 |
| 90196 | Quintiles (State/One-Stop) | Overland Park, KS | 09/02/15 | 08/28/15 |
| 90197 | Legacy Measurements Solutions (State/One-Stop) | Bristow, OK | 09/02/15 | 08/31/15 |
| 90198 | Yupana Tech (Workers) | Walnut Creek, CA | 09/02/15 | 09/02/15 |
| 90199 | AIG (State/One-Stop) | Berkeley Heights, NJ | 09/03/15 | 07/15/15 |
| 90200 | Commerzbank (State/One-Stop) | New York, NY | 09/03/15 | 09/02/15 |
| 90201 | Desmi-Afti (State/One-Stop) | Orchard Park, NY | 09/03/15 | 08/24/15 |
| 90202 | Extreme Networks (State/One-Stop) | Salem, NH | 09/03/15 | 09/01/15 |
| 90203 | Fritz Enterprises Inc. (Workers) | Fairfield, AL | 09/03/15 | 09/01/15 |
| 90204 | FTS (Workers) | Chickasha, OK | 09/03/15 | 09/01/15 |
| 90205 | Lenovo (Workers) | Morrisville, NC | 09/03/15 | 09/01/15 |
| 90206 | Motorad (State/One-Stop) | Niagara Falls, NY | 09/03/15 | 08/24/15 |
| 90207 | National Oilwell Varco (State/One-Stop) | Houston, OK | 09/03/15 | 09/01/15 |
| 90208 | Noble Energy Inc. (Workers) | Ardmore, OK | 09/03/15 | 09/02/15 |
| 90209 | Primary Financial Services, LLC (State/One-Stop) | Cheektowaga, NY | 09/03/15 | 09/01/15 |
| 90210 | Uni-Select USA (State/One-Stop) | Tonawanda, NY | 09/03/15 | 09/02/15 |
| 90211 | United Health Group/Optum Healthcare (State/One-Stop) | Trumbull, CT | 09/03/15 | 09/01/15 |
| 90212 | Verso Corporation (State/One-Stop) | Jay, ME | 09/03/15 | 09/02/15 |
| 90213 | Volvo Construction Equipment North America (Company) | Chambersburg, PA | 09/03/15 | 09/02/15 |
| 90214 | Concurrent Manufacturing (State/One-Stop) | Hialeah, FL | 09/04/15 | 09/03/15 |
| 90215 | Chem Pruf Door Co Ltd (Workers) | Brownsville, TX | 09/08/15 | 09/05/15 |
| 90216 | iMedX (State/One-Stop) | Atlanta, GA | 09/08/15 | 09/04/15 |
| 90217 | Keystone Profiles Ltd (Company) | Beaver Falls, PA | 09/08/15 | 09/04/15 |
| 90218 | Legend 3D (Workers) | Carlsbad, CA | 09/08/15 | 09/05/15 |
| 90219 | Morgan Advanced Material (Union) | Coudersport, PA | 09/08/15 | 08/14/15 |
| 90220 | Nabors Completion & Production (Workers) | El Reno, OK | 09/08/15 | 09/08/15 |
| 90221 | Niagara LaSalle Corporation (State/One-Stop) | Buffalo, NY | 09/08/15 | 09/03/15 |
| 90222 | Telesource Services, LLC (Company) | Bensenville, IL | 09/08/15 | 09/04/15 |
| 90223 | Telesource Services, LLC (Company) | Poniac, MI | 09/08/15 | 09/04/15 |
| 90224 | Texas Health Care, P.L.L.C. (Company) | Fort Worth, TX | 09/08/15 | 09/03/15 |

97 TAA PETITIONS INSTITUTED BETWEEN 8/25/15 AND 9/11/15—Continued

| TA–W | Subject firm (petitioners) | Location | Date of institution | Date of petition |
|---|---|---|---|---|
| 90225 | TMK Ipsco Koppel Tubulars (Union) | Ambridge, PA | 09/08/15 | 09/01/15 |
| 90226 | Toyota Tsusho America, Inc. (Workers) | Farmington Hills, MI | 09/08/15 | 09/01/15 |
| 90227 | ResMed Motor Technologies (State/One-Stop) | Chatsworth, CA | 09/09/15 | 09/08/15 |
| 90228 | Allergan Medical (State/One-Stop) | Santa Maria, CA | 09/09/15 | 09/08/15 |
| 90229 | Carrier (Union) | Syracuse, NY | 09/10/15 | 09/01/15 |
| 90230 | Energizer Holding, Inc. (State/One-Stop) | Westlake, OH | 09/10/15 | 08/31/15 |
| 90231 | Express Group Holdings LLC (State/One-Stop) | Tulsa, OK | 09/10/15 | 09/09/15 |
| 90232 | IBM (State/One-Stop) | Glendale, CA | 09/10/15 | 09/09/15 |
| 90233 | Miller Welding & Machine Company (Company) | Brookville, PA | 09/10/15 | 09/04/15 |
| 90234 | Parker Hannifin Corporation (Company) | Anaheim, CA | 09/10/15 | 09/09/15 |
| 90235 | Parker Hannifin Corporation (Company) | Fontana, CA | 09/10/15 | 09/09/15 |
| 90236 | Gamma North (State/One-Stop) | Alden, NY | 09/10/15 | 08/31/15 |
| 90237 | YP LLC (Workers) | Tucker, GA | 09/11/15 | 09/10/15 |
| 90238 | BIC (State/One-Stop) | Shelton, CT | 09/11/15 | 09/08/15 |
| 90239 | PCS, Inc. (State/One-Stop) | Fremont, CA | 09/11/15 | 09/10/15 |
| 90240 | ABB, Inc. (Union) | Greensburg, PA | 09/11/15 | 09/11/15 |
| 90241 | Wood Group—PAC (State/One-Stop) | Houston, TX | 09/11/15 | 09/10/15 |

[FR Doc. 2015–26826 Filed 10–21–15; 8:45 am]

**BILLING CODE 4510–FN–P**

## DEPARTMENT OF LABOR

### Employment and Training Administration

### Notice of Determinations Regarding Eligibility to Apply for Worker Adjustment Assistance

In accordance with Section 223 of the Trade Act of 1974, as amended (19 U.S.C. 2273) the Department of Labor herein presents summaries of determinations regarding eligibility to apply for trade adjustment assistance for workers by (TA–W) number issued during the period of *August 25, 2015 through September 11, 2015.*

In order for an affirmative determination to be made for workers of a primary firm and a certification issued regarding eligibility to apply for worker adjustment assistance, each of the group eligibility requirements of Section 222(a) of the Act must be met.

I. Under Section 222(a)(2)(A), the following must be satisfied:

(1) a significant number or proportion of the workers in such workers' firm have become totally or partially separated, or are threatened to become totally or partially separated;

(2) the sales or production, or both, of such firm have decreased absolutely; and

(3) One of the following must be satisfied:

(A) Imports of articles or services like or directly competitive with articles produced or services supplied by such firm have increased;

(B) imports of articles like or directly competitive with articles into which one or more component parts produced by such firm are directly incorporated, have increased;

(C) imports of articles directly incorporating one or more component parts produced outside the United States that are like or directly competitive with imports of articles incorporating one or more component parts produced by such firm have increased;

(D) imports of articles like or directly competitive with articles which are produced directly using services supplied by such firm, have increased; and

(4) the increase in imports contributed importantly to such workers' separation or threat of separation and to the decline in the sales or production of such firm; or

II. Section 222(a)(2)(B) all of the following must be satisfied:

(1) A significant number or proportion of the workers in such workers' firm have become totally or partially separated, or are threatened to become totally or partially separated;

(2) One of the following must be satisfied:

(A) There has been a shift by the workers' firm to a foreign country in the production of articles or supply of services like or directly competitive with those produced/supplied by the workers' firm;

(B) there has been an acquisition from a foreign country by the workers' firm of articles/services that are like or directly competitive with those produced/supplied by the workers' firm; and

(3) the shift/acquisition contributed importantly to the workers' separation or threat of separation.

In order for an affirmative determination to be made for adversely affected secondary workers of a firm and a certification issued regarding eligibility to apply for worker adjustment assistance, each of the group eligibility requirements of Section 222(b) of the Act must be met.

(1) a significant number or proportion of the workers in the workers' firm have become totally or partially separated, or are threatened to become totally or partially separated;

(2) the workers' firm is a Supplier or Downstream Producer to a firm that employed a group of workers who received a certification of eligibility under Section 222(a) of the Act, and such supply or production is related to the article or service that was the basis for such certification; and

(3) either—

(A) the workers' firm is a supplier and the component parts it supplied to the firm described in paragraph (2) accounted for at least 20 percent of the production or sales of the workers' firm; or

(B) a loss of business by the workers' firm with the firm described in paragraph (2) contributed importantly to the workers' separation or threat of separation.

In order for an affirmative determination to be made for adversely affected workers in firms identified by the International Trade Commission and a certification issued regarding eligibility to apply for worker adjustment assistance, each of the group eligibility requirements of Section 222(e) of the Act must be met.

(1) the workers' firm is publicly identified by name by the International Trade Commission as a member of a domestic industry in an investigation resulting in—

(A) an affirmative determination of serious injury or threat thereof under section 202(b)(1);

(B) an affirmative determination of market disruption or threat thereof under section 421(b)(1); or

(C) an affirmative final determination of material injury or threat thereof under section 705(b)(1)(A) or 735(b)(1)(A) of the Tariff Act of 1930 (19 U.S.C. 1671d(b)(1)(A) and 1673d(b)(1)(A));

(2) the petition is filed during the 1-year period beginning on the date on which—

(A) a summary of the report submitted to the President by the International Trade Commission under section 202(f)(1) with respect to the affirmative determination described in paragraph (1)(A) is published in the **Federal Register** under section 202(f)(3); or

(B) notice of an affirmative determination described in subparagraph (1) is published in the **Federal Register**; and

(3) the workers have become totally or partially separated from the workers' firm within—

(A) the 1-year period described in paragraph (2); or

(B) notwithstanding section 223(b)(1), the 1-year period preceding the 1-year period described in paragraph (2).

**Affirmative Determinations for Worker Adjustment Assistance**

The following certifications have been issued. The date following the company name and location of each determination references the impact date for all workers of such determination.

The following certifications have been issued. The requirements of Section 222(a)(2)(A) (increased imports) of the Trade Act have been met.

| TA–W No. | Subject firm | Location | Impact date |
|---|---|---|---|
| 86,039 | Arcelormittal Georgetown | Georgetown, SC | April 5, 2015. |
| 86,039A | Phoenix Services, Working On-Site at Arcelormittal Georgetown. | Georgetown, SC | May 27, 2014. |

The following certifications have been issued. The requirements of Section 222(a)(2)(B) (shift in production or services) of the Trade Act have been met.

| TA–W No. | Subject firm | Location | Impact date |
|---|---|---|---|
| 85,144 | IP & Science (Patent Payments), Master Data Center, Global Operations, Thomson Reuters, Pontoon, and Adecco. | Bingham Farms, MI | March 12, 2013. |
| 85,173 | Xerox State and Local Solutions, Inc., Business Services, LLC, Finance & Accounting Departments, Robert Half, etc. | Waite Park, MN | March 21, 2013. |
| 85,247 | MoneyGram Payment Systems, Inc., MoneyGram, International, Accountemps, Apex Systems, Baker Tilly, etc. | Brooklyn Center, MN | April 18, 2013. |
| 85,350 | Computer Sciences Corporation (CSC), Insurance Division, Shared Engineering & Technology Services Group. | Blythewood, SC | May 30, 2013. |
| 85,427 | MoneyGram Payment Systems, Inc., MoneyGram International, Accountemps, APEX Systems, Baker Tilly, etc. | Lakewood, CO | July 15, 2013. |
| 85,427A | MoneyGram Payment Systems, Inc., MoneyGram International, Customer Car Division, Intellisource. | Lakewood, CO | November 19, 2013. |
| 85,495 | Sumitomo Electric Device Innovations USA, Inc., Sumitomo Electric USA Holding, Inc., VCSEL Group. | Albuquerque, NM | August 20, 2013. |
| 85,527 | Syncreon Technology (America), Inc., Express Employment Professionals. | Allentown, PA | September 10, 2013. |
| 85,605 | GE Power Electronics, Inc., GE Energy Management Division, General Electric Company. | Galion, OH | October 17, 2013. |
| 85,903 | Accenture LLP, Verizon Customer Case and Operations, Verizon Business Network, etc.. | Richardson, TX | March 25, 2014. |
| 85,903A | Accenture LLP, Verizon Customer Case and Operations, Verizon Business Network, etc.. | Richardson, TX | March 25, 2014. |
| 86,076 | Omnicare, Inc., Omnicare Headquarters—Cincinnati, IT Business Group. | Cincinnati, OH | June 8, 2014. |
| 86,076A | Omnicare, Inc., OIS Helpdesk and Data Center, IT Business Group, DotStaff. | Dublin, OH | June 8, 2014. |
| 86,076B | Omnicare, Inc., Omnicare Information Solutions—Trevose, IT Business Group. | Trevose, PA | June 8, 2014. |
| 86,108 | Sol Inc., Carmanah Technologies Corporation, ADP Totalsource. | Palm City, FL | June 17, 2014. |
| 86,114 | Regal Beloit America, Inc., West Plains Division, Regal Beloit Corporation. | West Plains, MO | May 22, 2015. |
| 86,120 | Avery Dennison, Retail Branding & Information Solutions (RBIS) Division, Adecco, Zero Chaos. | Greensboro, NC | June 22, 2014. |

**Determinations Terminating Investigations of Petitions for Worker Adjustment Assistance**

After notice of the petitions was published in the **Federal Register** and on the Department's Web site, as required by Section 221 of the Act (19 U.S.C. 2271), the Department initiated investigations of these petitions.

The following determinations terminating investigations were issued because the petitioner has requested that the petition be withdrawn.

| TA–W No. | Subject firm | Location | Impact date |
|---|---|---|---|
| 86,070 ..... | Interplex Tech Group ..... | North Haven, CT. ..... | |

I hereby certify that the aforementioned determinations were issued during the period of *August 25, 2015 through September 11, 2015.* These determinations are available on the Department's Web site *www.tradeact/taa/taa_search_form.cfm* under the searchable listing of determinations or by calling the Office of Trade Adjustment Assistance toll free at 888–365–6822.

Signed at Washington, DC, this 16th day of September 2015.

**Hope D. Kinglock,**

*Certifying Officer, Office of Trade Adjustment Assistance.*

[FR Doc. 2015–26825 Filed 10–21–15; 8:45 am]

**BILLING CODE 4510–FN–P**

## DEPARTMENT OF LABOR

### Office of the Secretary

### Agency Information Collection Activities; Submission for OMB Review; Comment Request; Prohibited Transaction Class Exemption for Cross-Trades of Securities by Index and Model-Driven Funds

**ACTION:** Notice.

**SUMMARY:** The Department of Labor (DOL) is submitting the Employee Benefits Security Administration (EBSA) sponsored information collection request (ICR) titled, ''Prohibited Transaction Class Exemption for Cross-Trades of Securities by Index and Model-Driven Funds,'' to the Office of Management and Budget (OMB) for review and approval for continued use, without change, in accordance with the Paperwork Reduction Act of 1995 (PRA), 44 U.S.C. 3501 *et seq.* Public comments on the ICR are invited.

**DATES:** The OMB will consider all written comments that agency receives on or before November 23, 2015.

**ADDRESSES:** A copy of this ICR with applicable supporting documentation; including a description of the likely respondents, proposed frequency of response, and estimated total burden may be obtained free of charge from the RegInfo.gov Web site at *http://www.reginfo.gov/public/do/PRAViewICR?ref_nbr=201509–1210–004* (this link will only become active on the day following publication of this notice) or by contacting Michel Smyth by telephone at 202–693–4129, TTY 202–693–8064, (these are not toll-free numbers) or by email at *DOL_PRA_PUBLIC@dol.gov.*

Submit comments about this request by mail or courier to the Office of Information and Regulatory Affairs, Attn: OMB Desk Officer for DOL–EBSA, Office of Management and Budget, Room 10235, 725 17th Street NW., Washington, DC 20503; by Fax: 202–395–5806 (this is not a toll-free number); or by email: *OIRA_submission@omb.eop.gov.* Commenters are encouraged, but not required, to send a courtesy copy of any comments by mail or courier to the U.S. Department of Labor-OASAM, Office of the Chief Information Officer, Attn: Departmental Information Compliance Management Program, Room N1301, 200 Constitution Avenue NW., Washington, DC 20210; or by email: *DOL_PRA_PUBLIC@dol.gov.*

**FOR FURTHER INFORMATION CONTACT:** Michel Smyth by telephone at 202–693–4129, TTY 202–693–8064, (these are not toll-free numbers) or by email at *DOL_PRA_PUBLIC@dol.gov.*

**Authority:** 44 U.S.C. 3507(a)(1)(D).

**SUPPLEMENTARY INFORMATION:** This ICR seeks to extend PRA authority for the Prohibited Transaction Class Exemption for Cross-Trades of Securities by Index and Model-Driven Funds information collection. Prohibited Transaction Class Exemption 2002–12 permits cross-trades of securities between index and model-driven funds managed by investment managers and among such funds and certain large accounts to which such investment managers act as a trading adviser in connection with a specific portfolio-restructuring program. To ensure managers have complied with exemption requirements, the DOL has included in the exemption certain recordkeeping and disclosure obligations designed to safeguard plan assets by periodically providing information to plan fiduciaries, which generally must be independent about the cross-trading program. Employee Retirement Income Security Act section 408(a) authorizes this information collection. *See* 29 U.S.C. 1108(a).

This information collection is subject to the PRA. A Federal agency generally cannot conduct or sponsor a collection of information, and the public is generally not required to respond to an information collection, unless it is approved by the OMB under the PRA and displays a currently valid OMB Control Number. In addition, notwithstanding any other provisions of law, no person shall generally be subject to penalty for failing to comply with a collection of information that does not display a valid Control Number. *See* 5 CFR 1320.5(a) and 1320.6. The DOL obtains OMB approval for this information collection under Control Number 1210–0115.

OMB authorization for an ICR cannot be for more than three (3) years without renewal, and the current approval for this collection is scheduled to expire on October 31, 2015. The DOL seeks to extend PRA authorization for this information collection for three (3) more years, without any change to existing requirements. The DOL notes that existing information collection requirements submitted to the OMB receive a month-to-month extension while they undergo review. For additional substantive information about this ICR, see the related notice published in the **Federal Register** on June 17, 2015 (80 FR 34696).

Interested parties are encouraged to send comments to the OMB, Office of Information and Regulatory Affairs at the address shown in the **ADDRESSES** section within thirty (30) days of publication of this notice in the **Federal Register**. In order to help ensure appropriate consideration, comments should mention OMB Control Number 1210–0115. The OMB is particularly interested in comments that:

- Evaluate whether the proposed collection of information is necessary for the proper performance of the functions of the agency, including whether the information will have practical utility;
- Evaluate the accuracy of the agency's estimate of the burden of the proposed collection of information, including the validity of the methodology and assumptions used;
- Enhance the quality, utility, and clarity of the information to be collected; and
- Minimize the burden of the collection of information on those who are to respond, including through the use of appropriate automated, electronic, mechanical, or other technological collection techniques or other forms of information technology, *e.g.,* permitting electronic submission of responses.

*Agency:* DOL–EBSA.

*Title of Collection:* Prohibited Transaction Class Exemption for Cross-

Trades of Securities by Index and Model-Driven Funds.

*OMB Control Number:* 1210–0115.

*Affected Public:* Private Sector—businesses or other for-profits.

*Total Estimated Number of Respondents:* 60.

*Total Estimated Number of Responses:* 840.

*Total Estimated Annual Time Burden:* 855 hours.

*Total Estimated Annual Other Costs Burden:* $800.

Dated: October 18, 2015.

**Michel Smyth,**

*Departmental Clearance Officer.*

[FR Doc. 2015–26827 Filed 10–21–15; 8:45 am]

**BILLING CODE 4510–29–P**

## DEPARTMENT OF LABOR

### Office of the Secretary

### Agency Information Collection Activities; Submission for OMB Review; Comment Request; Safety Standards for Roof Bolts in Metal and Nonmetal Mines and Underground Coal Mines

**ACTION:** Notice.

**SUMMARY:** The Department of Labor (DOL) is submitting the Mine Safety and Health Administration (MSHA) sponsored information collection request (ICR) titled, ''Safety Standards for Roof Bolts in Metal and Nonmetal Mines and Underground Coal Mines,'' to the Office of Management and Budget (OMB) for review and approval for continued use, without change, in accordance with the Paperwork Reduction Act of 1995 (PRA), 44 U.S.C. 3501 *et seq.* Public comments on the ICR are invited.

**DATES:** The OMB will consider all written comments that agency receives on or before November 23, 2015.

**ADDRESSES:** A copy of this ICR with applicable supporting documentation; including a description of the likely respondents, proposed frequency of response, and estimated total burden may be obtained free of charge from the RegInfo.gov Web site at *http://www.reginfo.gov/public/do/PRAViewICR?ref_nbr=201507-1219-006* (this link will only become active on the day following publication of this notice) or by contacting Michel Smyth by telephone at 202–693–4129, TTY 202–693–8064, (these are not toll-free numbers) or by email at *DOL_PRA_PUBLIC@dol.gov.*

Submit comments about this request by mail or courier to the Office of Information and Regulatory Affairs, Attn: OMB Desk Officer for DOL–MSHA, Office of Management and Budget, Room 10235, 725 17th Street NW., Washington, DC 20503; by Fax: 202–395–5806 (this is not a toll-free number); or by email: *OIRA_submission@omb.eop.gov.* Commenters are encouraged, but not required, to send a courtesy copy of any comments by mail or courier to the U.S. Department of Labor-OASAM, Office of the Chief Information Officer, Attn: Departmental Information Compliance Management Program, Room N1301, 200 Constitution Avenue NW., Washington, DC 20210; or by email: *DOL_PRA_PUBLIC@dol.gov.*

**FOR FURTHER INFORMATION CONTACT:** Michel Smyth by telephone at 202–693–4129, TTY 202–693–8064, (these are not toll-free numbers) or by email at *DOL_PRA_PUBLIC@dol.gov.*

**Authority:** 44 U.S.C. 3507(a)(1)(D).

**SUPPLEMENTARY INFORMATION:** This ICR seeks to extend PRA authority for the Safety Standards for Roof Bolts in Metal and Nonmetal Mines and Underground Coal Mines information collection requirements codified in various regulations. More specifically, this ICR addresses recordkeeping requirements associated with regulations 30 CFR 56.3203, 57.3203, and 75.204(a) and (f)(6). Federal Mine Safety & Health Act of 1977 sections 103(a) and 103(h) authorize this information collection. *See* 30 U.S.C. 813(a) and 30 U.S.C. 813(h).

This information collection is subject to the PRA. A Federal agency generally cannot conduct or sponsor a collection of information, and the public is generally not required to respond to an information collection, unless it is approved by the OMB under the PRA and displays a currently valid OMB Control Number. In addition, notwithstanding any other provisions of law, no person shall generally be subject to penalty for failing to comply with a collection of information that does not display a valid Control Number. *See* 5 CFR 1320.5(a) and 1320.6. The DOL obtains OMB approval for this information collection under Control Number 1219–0121.

OMB authorization for an ICR cannot be for more than three (3) years without renewal, and the current approval for this collection is scheduled to expire on October 31, 2015. The DOL seeks to extend PRA authorization for this information collection for three (3) more years, without any change to existing requirements. The DOL notes that existing information collection requirements submitted to the OMB receive a month-to-month extension while they undergo review. For additional substantive information about this ICR, see the related notice published in the **Federal Register** on June 4, 2015 (80 FR 31923).

Interested parties are encouraged to send comments to the OMB, Office of Information and Regulatory Affairs at the address shown in the **ADDRESSES** section within thirty (30) days of publication of this notice in the **Federal Register**. In order to help ensure appropriate consideration, comments should mention OMB Control Number 1219–0121. The OMB is particularly interested in comments that:

- Evaluate whether the proposed collection of information is necessary for the proper performance of the functions of the agency, including whether the information will have practical utility;
- Evaluate the accuracy of the agency's estimate of the burden of the proposed collection of information, including the validity of the methodology and assumptions used;
- Enhance the quality, utility, and clarity of the information to be collected; and
- Minimize the burden of the collection of information on those who are to respond, including through the use of appropriate automated, electronic, mechanical, or other technological collection techniques or other forms of information technology, *e.g.,* permitting electronic submission of responses.

*Agency:* DOL–MSHA.

*Title of Collection:* Safety Standards for Roof Bolts in Metal and Nonmetal Mines and Underground Coal Mines.

*OMB Control Number:* 1219–0121.

*Affected Public:* Private Sector—businesses or other for-profits.

*Total Estimated Number of Respondents:* 844.

*Total Estimated Number of Responses:* 87,674.

*Total Estimated Annual Time Burden:* 537 hours.

*Total Estimated Annual Other Costs Burden:* $0.

Dated: October 17, 2015.

**Michel Smyth,**

*Departmental Clearance Officer.*

[FR Doc. 2015–26829 Filed 10–21–15; 8:45 am]

**BILLING CODE 4510–43–P**

## DEPARTMENT OF LABOR

### Office of the Secretary

### Agency Information Collection Activities; Submission for OMB Review; Comment Request; Health Standards for Diesel Particulate Matter Exposure in Underground Metal and Nonmetal Mines

**ACTION:** Notice.

**SUMMARY:** The Department of Labor (DOL) is submitting the Mine Safety and Health Administration (MSHA) sponsored information collection request (ICR) titled, ''Health Standards for Diesel Particulate Matter Exposure in Underground Metal and Nonmetal Mines,'' to the Office of Management and Budget (OMB) for review and approval for continued use, without change, in accordance with the Paperwork Reduction Act of 1995 (PRA), 44 U.S.C. 3501 *et seq*. Public comments on the ICR are invited.

**DATES:** The OMB will consider all written comments that agency receives on or before November 23, 2015.

**ADDRESSES:** A copy of this ICR with applicable supporting documentation; including a description of the likely respondents, proposed frequency of response, and estimated total burden may be obtained free of charge from the RegInfo.gov Web site at *http://www.reginfo.gov/public/do/PRAViewICR?ref_nbr=201507-1219-007* (this link will only become active on the day following publication of this notice) or by contacting Michel Smyth by telephone at 202–693–4129, TTY 202–693–8064, (these are not toll-free numbers) or by email at *DOL_PRA_PUBLIC@dol.gov.*

Submit comments about this request by mail or courier to the Office of Information and Regulatory Affairs, Attn: OMB Desk Officer for DOL–MSHA, Office of Management and Budget, Room 10235, 725 17th Street NW., Washington, DC 20503; by Fax: 202–395–5806 (this is not a toll-free number); or by email: *OIRA_submission@omb.eop.gov*. Commenters are encouraged, but not required, to send a courtesy copy of any comments by mail or courier to the U.S. Department of Labor-OASAM, Office of the Chief Information Officer, Attn: Departmental Information Compliance Management Program, Room N1301, 200 Constitution Avenue NW., Washington, DC 20210; or by email: *DOL_PRA_PUBLIC@dol.gov*.

**FOR FURTHER INFORMATION CONTACT:** Contact Michel Smyth by telephone at 202–693–4129, TTY 202–693–8064, (these are not toll-free numbers) or by email at *DOL_PRA_PUBLIC@dol.gov.*

**Authority:** 44 U.S.C. 3507(a)(1)(D).

**SUPPLEMENTARY INFORMATION:** This ICR seeks to extend PRA authority for the Health Standards for Diesel Particulate Matter (DPM) Exposure in Underground Metal and Nonmetal Mines information collection requirements codified in various sections of regulations 30 CFR part 57. DPM is a probable carcinogen consisting of tiny particles present in diesel engine exhaust that can readily penetrate into the deepest recesses of the lungs. Despite ventilation, the confined underground mine work environment may contribute to significant concentrations of particles produced by equipment used in the mine. Underground miners are exposed to higher concentrations of DPM than any other occupational group. As a result, these workers face a significantly greater risk than other workers do of developing such diseases as lung cancer, heart failure, serious allergic responses, and other cardiopulmonary problems.

The DPM regulations establish a permissible exposure limit to total carbon, which is a surrogate for measuring a miner's exposure to DPM, and include a number of other requirements for the protection of miners' health. DPM regulations sections 57.5060, 57.5065, 57.5066, 57.5070, 57.5071, and 57.5075(a) and (b)(3) contain the information collection requirements associated with this ICR. Federal Mine Safety and Health Act of 1977 sections 101(a) and 103(h) authorize this information collection. *See* 30 U.S.C. 811(a) and 813(h).

This information collection is subject to the PRA. A Federal agency generally cannot conduct or sponsor a collection of information, and the public is generally not required to respond to an information collection, unless it is approved by the OMB under the PRA and displays a currently valid OMB Control Number. In addition, notwithstanding any other provisions of law, no person shall generally be subject to penalty for failing to comply with a collection of information that does not display a valid Control Number. *See* 5 CFR 1320.5(a) and 1320.6. The DOL obtains OMB approval for this information collection under Control Number 1219–0135.

OMB authorization for an ICR cannot be for more than three (3) years without renewal, and the current approval for this collection is scheduled to expire on October 31, 2015. The DOL seeks to extend PRA authorization for this information collection for three (3) more years, without any change to existing requirements. The DOL notes that existing information collection requirements submitted to the OMB receive a month-to-month extension while they undergo review. For additional substantive information about this ICR, see the related notice published in the **Federal Register** on June 4, 2015 (80 FR 31924).

Interested parties are encouraged to send comments to the OMB, Office of Information and Regulatory Affairs at the address shown in the **ADDRESSES** section within thirty (30) days of publication of this notice in the **Federal Register**. In order to help ensure appropriate consideration, comments should mention OMB Control Number 1219–0135. The OMB is particularly interested in comments that:

- Evaluate whether the proposed collection of information is necessary for the proper performance of the functions of the agency, including whether the information will have practical utility;
- Evaluate the accuracy of the agency's estimate of the burden of the proposed collection of information, including the validity of the methodology and assumptions used;
- Enhance the quality, utility, and clarity of the information to be collected; and
- Minimize the burden of the collection of information on those who are to respond, including through the use of appropriate automated, electronic, mechanical, or other technological collection techniques or other forms of information technology, *e.g.,* permitting electronic submission of responses.

*Agency:* DOL–MSHA.

*Title of Collection:* Health Standards for Diesel Particulate Matter Exposure in Underground Metal and Nonmetal Mines.

*OMB Control Number:* 1219–0135.

*Affected Public:* Private Sector—businesses or other for-profits.

*Total Estimated Number of Respondents:* 194.

*Total Estimated Number of Responses:* 41,692.

*Total Estimated Annual Time Burden:* 8,928 hours.

*Total Estimated Annual Other Costs Burden:* $416,639.

Dated: October 17, 2015.

**Michel Smyth,**

*Departmental Clearance Officer.*

[FR Doc. 2015–26828 Filed 10–21–15; 8:45 am]

BILLING CODE 4510–43–P

## DEPARTMENT OF LABOR

### Office of the Secretary

### Agency Information Collection Activities; Submission for OMB Review; Comment Request; Ground Control Plans for Surface Coal Mines and Surface Work Areas of Underground Coal Mines

**ACTION:** Notice.

**SUMMARY:** The Department of Labor (DOL) is submitting the Mine Safety and Health Administration (MSHA) sponsored information collection request (ICR) titled, ''Ground Control Plans for Surface Coal Mines and Surface Work Areas of Underground Coal Mines,'' to the Office of Management and Budget (OMB) for review and approval for continued use, without change, in accordance with the Paperwork Reduction Act of 1995 (PRA), 44 U.S.C. 3501 *et seq*. Public comments on the ICR are invited.

**DATES:** The OMB will consider all written comments that agency receives on or before November 23, 2015.

**ADDRESSES:** A copy of this ICR with applicable supporting documentation; including a description of the likely respondents, proposed frequency of response, and estimated total burden may be obtained free of charge from the RegInfo.gov Web site at *http://www.reginfo.gov/public/do/PRAViewICR?ref_nbr=201507-1219-005* (this link will only become active on the day following publication of this notice) or by contacting Michel Smyth by telephone at 202–693–4129, TTY 202–693–8064, (these are not toll-free numbers) or by email at *DOL_PRA_PUBLIC@dol.gov.*

Submit comments about this request by mail or courier to the Office of Information and Regulatory Affairs, Attn: OMB Desk Officer for DOL–MSHA, Office of Management and Budget, Room 10235, 725 17th Street NW., Washington, DC 20503; by Fax: 202–395–5806 (this is not a toll-free number); or by email: *OIRA_submission@omb.eop.gov*. Commenters are encouraged, but not required, to send a courtesy copy of any comments by mail or courier to the U.S. Department of Labor-OASAM, Office of the Chief Information Officer, Attn: Departmental Information Compliance Management Program, Room N1301, 200 Constitution Avenue NW., Washington, DC 20210; or by email: *DOL_PRA_PUBLIC@dol.gov*.

**FOR FURTHER INFORMATION CONTACT:** Michel Smyth by telephone at 202–693–4129, TTY 202–693–8064, (these are not toll-free numbers) or by email at *DOL_PRA_PUBLIC@dol.gov.*

**Authority:** 44 U.S.C. 3507(a)(1)(D).

**SUPPLEMENTARY INFORMATION:** This ICR seeks to extend PRA authority for the Ground Control Plans for Surface Coal Mines and Surface Work Areas of Underground Coal Mines information collection. Regulations 30 CFR 77.1000 makes it mandatory for each operator of a surface coal mine to establish and follow a ground control plan that is consistent with prudent engineering design and that will ensure safe working conditions. The mine operator is required by § 77.1000–1 to file the ground control plan under § 77.1000 for highwalls, pits, and spoil banks with the appropriate MSHA District Manager. Mining methods employed by the operator are selected to ensure highwall, pit, and spoil bank stability. In the event of a highwall failure or material dislodgment, there may be very little time to escape possible injury; therefore, preventive measures must be taken. Each plan is based on the type of strata expected to be encountered, the height and angle of highwalls and spoil banks, and the equipment to be used at the mine. The plan is used to show how the mine operator will maintain safe conditions around the highwalls, pits, and spoil banks. The MSHA reviews each plan to ensure highwalls, pits, and spoil banks are maintained in a safe condition through the use of sound engineering design. Federal Mine Safety & Health Act of 1977 sections 103(a) and 103(h) authorize this information collection. *See* 30 U.S.C. 813(a) and 30 U.S.C. 813(h).

This information collection is subject to the PRA. A Federal agency generally cannot conduct or sponsor a collection of information, and the public is generally not required to respond to an information collection, unless it is approved by the OMB under the PRA and displays a currently valid OMB Control Number. In addition, notwithstanding any other provisions of law, no person shall generally be subject to penalty for failing to comply with a collection of information that does not display a valid Control Number. *See* 5 CFR 1320.5(a) and 1320.6. The DOL obtains OMB approval for this information collection under Control Number 1219–0026.

OMB authorization for an ICR cannot be for more than three (3) years without renewal, and the current approval for this collection is scheduled to expire on October 31, 2015. The DOL seeks to extend PRA authorization for this information collection for three (3) more years, without any change to existing requirements. The DOL notes that existing information collection requirements submitted to the OMB receive a month-to-month extension while they undergo review. For additional substantive information about this ICR, see the related notice published in the **Federal Register** on June 4, 2015 (80 FR 31925).

Interested parties are encouraged to send comments to the OMB, Office of Information and Regulatory Affairs at the address shown in the **ADDRESSES** section within thirty (30) days of publication of this notice in the **Federal Register**. In order to help ensure appropriate consideration, comments should mention OMB Control Number 1219–0026. The OMB is particularly interested in comments that:

- Evaluate whether the proposed collection of information is necessary for the proper performance of the functions of the agency, including whether the information will have practical utility;
- Evaluate the accuracy of the agency's estimate of the burden of the proposed collection of information, including the validity of the methodology and assumptions used;
- Enhance the quality, utility, and clarity of the information to be collected; and
- Minimize the burden of the collection of information on those who are to respond, including through the use of appropriate automated, electronic, mechanical, or other technological collection techniques or other forms of information technology, *e.g.,* permitting electronic submission of responses.

*Agency:* DOL–MSHA.

*Title of Collection:* Ground Control Plans for Surface Coal Mines and Surface Work Areas of Underground Coal Mines.

*OMB Control Number:* 1219–0026.

*Affected Public:* Private Sector—businesses or other for-profits.

*Total Estimated Number of Respondents:* 140.

*Total Estimated Number of Responses:* 140.

*Total Estimated Annual Time Burden:* 1,011 hours.

*Total Estimated Annual Other Costs Burden:* $266.

Dated: October 16, 2015.

**Michel Smyth,**

*Departmental Clearance Officer.*

[FR Doc. 2015–26823 Filed 10–21–15; 8:45 am]

BILLING CODE 4510–43–P

## DEPARTMENT OF LABOR

### Office of the Secretary

### Agency Information Collection Activities; Submission for OMB Review; Comment Request; Migrant and Seasonal Farmworker Monitoring Report and One-Stop Career Center Complaint/Referral Record

**ACTION:** Notice.

**SUMMARY:** The Department of Labor (DOL) is submitting the Employment and Training Administration (ETA) sponsored information collection request (ICR) titled, ''Migrant and Seasonal Farmworker Monitoring Report and One-Stop Career Center Complaint/Referral Record,'' to the Office of Management and Budget (OMB) for review and approval for continued use, without change, in accordance with the Paperwork Reduction Act (PRA) of 1995 (44 U.S.C. 3501 *et seq.*). Public comments on the ICR are invited.

**DATES:** The OMB will consider all written comments that agency receives on or before November 23, 2015.

**ADDRESSES:** A copy of this ICR with applicable supporting documentation; including a description of the likely respondents, proposed frequency of response, and estimated total burden may be obtained free of charge from the RegInfo.gov Web site at *http://www.reginfo.gov/public/do/PRAViewICR?ref_nbr=201509-1205-001* (this link will only become active on the day following publication of this notice) or by contacting Michel Smyth by telephone at 202–693–4129, TTY 202–693–8064, (these are not toll-free numbers) or sending an email to *DOL_PRA_PUBLIC@dol.gov.*

Submit comments about this request by mail or courier to the Office of Information and Regulatory Affairs, Attn: OMB Desk Officer for DOL–ETA, Office of Management and Budget, Room 10235, 725 17th Street NW., Washington, DC 20503; by Fax: 202–395–5806 (this is not a toll-free number); or by email: *OIRA_submission@omb.eop.gov.* Commenters are encouraged, but not required, to send a courtesy copy of any comments by mail or courier to the U.S. Department of Labor—OASAM, Office of the Chief Information Officer, Attn: Departmental Information Compliance Management Program, Room N1301, 200 Constitution Avenue NW., Washington, DC 20210; or by email: *DOL_PRA_PUBLIC@dol.gov.*

**FOR FURTHER INFORMATION CONTACT:** Michel Smyth by telephone at 202–693–4129, TTY 202–693–8064, (these are not toll-free numbers) or sending an email to *DOL_PRA_PUBLIC@dol.gov.*

**Authority:** 44 U.S.C. 3507(a)(1)(D).

**SUPPLEMENTARY INFORMATION:** This ICR seeks to extend PRA authority for the Migrant and Seasonal Farmworker (MSFW) Monitoring Report and One-Stop Career Center Complaint/Referral Record information collection that includes forms developed pursuant to regulations 20 CFR parts 651, 653, and 658. Form ETA–5148, Services to Migrant and Seasonal Farmworkers Report, collects data that monitors and measures how a State Workforce Agency delivers services to MSFWs. Form ETA–8429, One-Stop Career Center Compliance Referral Record, collects and documents complaints. Wagner Peyser Act section 10(c)(1) authorizes this information collection. *See* 29 U.S.C. 49i(c)(1).

This information collection is subject to the PRA. A Federal agency generally cannot conduct or sponsor a collection of information, and the public is generally not required to respond to an information collection, unless it is approved by the OMB under the PRA and displays a currently valid OMB Control Number. In addition, notwithstanding any other provisions of law, no person shall generally be subject to penalty for failing to comply with a collection of information that does not display a valid Control Number. *See* 5 CFR 1320.5(a) and 1320.6. The DOL obtains OMB approval for this information collection under Control Number 1205–0039.

OMB authorization for an ICR cannot be for more than three (3) years without renewal, and the current approval for this collection is scheduled to expire on October 31, 2015. The DOL seeks to extend PRA authorization for this information collection for three (3) more years, without any change to existing requirements. The DOL notes that existing information collection requirements submitted to the OMB receive a month-to-month extension while they undergo review. For additional substantive information about this ICR, see the related notice published in the **Federal Register** on November 4, 2014 (79 FR 65425).

Interested parties are encouraged to send comments to the OMB, Office of Information and Regulatory Affairs at the address shown in the **ADDRESSES** section within thirty (30) days of publication of this notice in the **Federal Register**. In order to help ensure appropriate consideration, comments should mention OMB Control Number 1205–0039. The OMB is particularly interested in comments that:

- Evaluate whether the proposed collection of information is necessary for the proper performance of the functions of the agency, including whether the information will have practical utility;
- Evaluate the accuracy of the agency's estimate of the burden of the proposed collection of information, including the validity of the methodology and assumptions used;
- Enhance the quality, utility, and clarity of the information to be collected; and
- Minimize the burden of the collection of information on those who are to respond, including through the use of appropriate automated, electronic, mechanical, or other technological collection techniques or other forms of information technology, *e.g.,* permitting electronic submission of responses.

*Agency:* DOL–ETA.

*Title of Collection:* Migrant and Seasonal Farmworker Monitoring Report and One-Stop Career Center Complaint/Referral Record.

*OMB Control Number:* 1205–0039.

*Affected Public:* Individuals or Households and State, Local, and Tribal Governments.

*Total Estimated Number of Respondents:* 3,586.

*Total Estimated Number of Responses:* 7,322.

*Total Estimated Annual Time Burden:* 8,992 hours.

*Total Estimated Annual Other Costs Burden:* $0.

Dated: October 16, 2015.

**Michel Smyth,**

*Departmental Clearance Officer.*

[FR Doc. 2015–26824 Filed 10–21–15; 8:45 am]

BILLING CODE 4510–FN–P

## DEPARTMENT OF LABOR

### Office of the Secretary

### Agency Information Collection Activities; Submission for OMB Review; Comment Request; Unemployment Compensation for Federal Employees

**ACTION:** Notice.

**SUMMARY:** The Department of Labor (DOL) is submitting the Employment and Training Administration (ETA) sponsored information collection request (ICR) titled, ''Unemployment Compensation for Federal Employees,'' to the Office of Management and Budget (OMB) for review and approval for

continued use, without change, in accordance with the Paperwork Reduction Act of 1995 (PRA), 44 U.S.C. 3501 *et seq.* Public comments on the ICR are invited.

**DATES:** The OMB will consider all written comments that agency receives on or before November 23, 2015.

**ADDRESSES:** A copy of this ICR with applicable supporting documentation; including a description of the likely respondents, proposed frequency of response, and estimated total burden may be obtained free of charge from the RegInfo.gov Web site at *http://www.reginfo.gov/public/do/PRAViewICR?ref_nbr=201508-1205-006* (this link will only become active on the day following publication of this notice) or by contacting Michel Smyth by telephone at 202–693–4129, TTY 202–693–8064, (these are not toll-free numbers) or by email at *DOL_PRA_PUBLIC@dol.gov.*

Submit comments about this request by mail or courier to the Office of Information and Regulatory Affairs, Attn: OMB Desk Officer for DOL–ETA, Office of Management and Budget, Room 10235, 725 17th Street NW., Washington, DC 20503; by Fax: 202–395–5806 (this is not a toll-free number); or by email: *OIRA_submission@omb.eop.gov.* Commenters are encouraged, but not required, to send a courtesy copy of any comments by mail or courier to the U.S. Department of Labor-OASAM, Office of the Chief Information Officer, Attn: Departmental Information Compliance Management Program, Room N1301, 200 Constitution Avenue NW., Washington, DC 20210; or by email: *DOL_PRA_PUBLIC@dol.gov.*

**FOR FURTHER INFORMATION CONTACT:** Michel Smyth by telephone at 202–693–4129, TTY 202–693–8064, (these are not toll-free numbers) or by email at *DOL_PRA_PUBLIC@dol.gov.*

**Authority:** 44 U.S.C. 3507(a)(1)(D).

**SUPPLEMENTARY INFORMATION:** This ICR seeks to extend PRA authority for the Unemployment Compensation for Federal Employees information collection. The Federal Unemployment Compensation Act, 5 U.S.C. 8501, *et seq.,* requires a State Workforce Agency (SWA) to administer the Unemployment Compensation for Federal Employees (UCFE) Program in accordance with the same terms and provisions of the paying State's unemployment insurance law that apply to unemployed claimants who worked in the private sector. Each SWA must be able to obtain certain information (wage and separation data) about each claimant for UCFE benefits to enable an eligibility determination. The DOL has prescribed forms to enable SWAs to obtain this necessary information. A SWA may customize these model forms, as needed, to collect the necessary information required to operate the UCFE program. Federal Unemployment Compensation Act section 6(b) authorizes this information collection. *See* 5 U.S.C. 8506(b).

This information collection is subject to the PRA. A Federal agency generally cannot conduct or sponsor a collection of information, and the public is generally not required to respond to an information collection, unless it is approved by the OMB under the PRA and displays a currently valid OMB Control Number. In addition, notwithstanding any other provisions of law, no person shall generally be subject to penalty for failing to comply with a collection of information that does not display a valid Control Number. *See* 5 CFR 1320.5(a) and 1320.6. The DOL obtains OMB approval for this information collection under Control Number 1205–0179.

OMB authorization for an ICR cannot be for more than three (3) years without renewal, and the current approval for this collection is scheduled to expire on October 31, 2015. The DOL seeks to extend PRA authorization for this information collection for three (3) more years, without any change to existing requirements. The DOL notes that existing information collection requirements submitted to the OMB receive a month-to-month extension while they undergo review. For additional substantive information about this ICR, see the related notice published in the **Federal Register** on April 16, 2015 (80 FR 20508).

Interested parties are encouraged to send comments to the OMB, Office of Information and Regulatory Affairs at the address shown in the **ADDRESSES** section within thirty (30) days of publication of this notice in the **Federal Register**. In order to help ensure appropriate consideration, comments should mention OMB Control Number 1205–0179. The OMB is particularly interested in comments that:

- Evaluate whether the proposed collection of information is necessary for the proper performance of the functions of the agency, including whether the information will have practical utility;
- Evaluate the accuracy of the agency's estimate of the burden of the proposed collection of information, including the validity of the methodology and assumptions used;
- Enhance the quality, utility, and clarity of the information to be collected; and
- Minimize the burden of the collection of information on those who are to respond, including through the use of appropriate automated, electronic, mechanical, or other technological collection techniques or other forms of information technology, *e.g.,* permitting electronic submission of responses.

*Agency:* DOL–ETA.

*Title of Collection:* Unemployment Compensation for Federal Employees.

*OMB Control Number:* 1205–0179.

*Affected Public:* Individuals or Households and State, Local, and Tribal Governments.

*Total Estimated Number of Respondents:* 47,342.

*Total Estimated Number of Responses:* 296,123.

*Total Estimated Annual Time Burden:* 23,120 hours.

*Total Estimated Annual Other Costs Burden:* $0.

Dated: October 13, 2015.

**Michel Smyth,**

*Departmental Clearance Officer.*

[FR Doc. 2015–26815 Filed 10–21–15; 8:45 am]

BILLING CODE 4510–FW–P

## DEPARTMENT OF LABOR

### Advisory Committee on Veterans' Employment, Training and Employer Outreach (ACVETEO): Meeting

**AGENCY:** Veterans' Employment and Training Service (VETS), Department of Labor.

**ACTION:** Notice of open meeting.

**SUMMARY:** This notice sets forth the schedule and proposed agenda of a forthcoming meeting of the ACVETEO. The ACVETEO will discuss the DOL core programs and services that assist veterans seeking employment and raise employer awareness as to the advantages of hiring veterans. There will be an opportunity for individuals or organizations to address the committee. Any individual or organization that wishes to do so should contact Mr. Gregory Green at 202–693–4734.

Individuals who will need accommodations for a disability in order to attend the meeting (*e.g.,* interpreting services, assistive listening devices, and/or materials in alternative format) should notify the Advisory Committee no later than Friday, November 6, 2015 by contacting Mr. Gregory Green at 202–693–4734. Requests made after this date will be reviewed, but availability of the requested accommodations cannot be guaranteed. The meeting site is accessible to individuals with disabilities. This Notice also describes

the functions of the ACVETEO. Notice of this meeting is required under Section 10(a)(2) of the Federal Advisory Committee Act. This document is intended to notify the general public.

**DATES:** Tuesday November 17, 2015 beginning at 9:00 a.m. and ending at approximately 4:00 p.m. (EST).

**ADDRESSES:** The meeting will take place at the U.S. Department of Labor, Frances Perkins Building, 200 Constitution Avenue NW., Washington, DC 20210, C–5515 Conference Room C. Members of the public are encouraged to arrive early to allow for security clearance into the Frances Perkins Building.

*Security Instructions:* Meeting participants should use the visitors' entrance to access the Frances Perkins Building, one block north of Constitution Avenue at 3rd and C Streets NW. For security purposes meeting participants must:

1. Present a valid photo ID to receive a visitor badge.
2. Know the name of the event being attended: the meeting event is the Advisory Committee on Veterans' Employment, Training and Employer Outreach (ACVETEO).
3. Visitor badges are issued by the security officer at the Visitor Entrance located at 3rd and C Streets NW. When receiving a visitor badge, the security officer will retain the visitor's photo ID until the visitor badge is returned to the security desk.
4. Laptops and other electronic devices may be inspected and logged for identification purposes.
5. Due to limited parking options, Metro's Judiciary Square station is the easiest way to access the Frances Perkins Building.

*Notice of Intent to Attend the Meeting:* All meeting participants are being asked to submit a notice of intent to attend by Friday, November 6, 2015, via email to Mr. Gregory Green at *green.gregory.b@dol.gov,* subject line ''September 2015 ACVETEO Meeting.''

**FOR FURTHER INFORMATION CONTACT:** Mr. Gregory Green, Assistant Designated Federal Official for the ACVETEO, (202) 693–4734.

**SUPPLEMENTARY INFORMATION:** The ACVETEO is a Congressionally mandated advisory committee authorized under Title 38, U.S. Code, Section 4110 and subject to the Federal Advisory Committee Act, 5 U.S.C. App. 2, as amended. The ACVETEO is responsible for: Assessing employment and training needs of veterans; determining the extent to which the programs and activities of the U.S. Department of Labor meet these needs; assisting to conduct outreach to employers seeking to hire veterans; making recommendations to the Secretary, through the Assistant Secretary for VETS, with respect to outreach activities and employment and training needs of Veterans; and carrying out such other activities necessary to make required reports and recommendations. The ACVETEO meets at least quarterly.

**Agenda**

9:00 a.m. Welcome and remarks, Teresa W. Gerton, Acting Assistant Secretary for Veterans Employment and Training Service
9:15 a.m. Administrative Business, Gregory Green, Assistant Designated Federal Official
9:20 a.m. Outreach Subcommittee Briefing and Discussion on Fiscal Year 2015 recommendations
10:00 a.m. Focused Populations Subcommittee Briefing and Discussion on Fiscal Year 2015 recommendations
10:40 a.m. Break
11:00 a.m. Transition Subcommittee briefing and discussion on Fiscal Year 2015 recommendations
11:40 p.m. Lunch
1:00 p.m. Finalize work on Fiscal Year 2015 recommendations
2:30 p.m. Briefing on status of Fiscal Year 2014 recommendations
3:30 p.m. Public Forum, Gregory Green Assistant Designated Federal Official
4:00 p.m. Adjourn

Signed in Washington, DC, this 14th day of October, 2015.

**Teresa W. Gerton,**

*Acting Assistant Secretary for Veterans' Employment and Training Service.*

[FR Doc. 2015–26800 Filed 10–21–15; 8:45 am]

**BILLING CODE 4510–79–P**

## OFFICE OF MANAGEMENT AND BUDGET

### Request for Comments on Circular No. A–130, Managing Information as a Strategic Resource

**AGENCY:** Office of Management and Budget.

**ACTION:** Notice.

**SUMMARY:** The Office of Management and Budget is seeking public comment on draft revisions to Circular No. A–130, Managing Information as a Strategic Resource.

**DATES:** Interested parties may submit comments and feedback by the deadline listed on *https://a130.cio.gov.*

**ADDRESSES:** Interested parties should provide comments at the following link: *https://a130.cio.gov.*

**FOR FURTHER INFORMATION CONTACT:** Ms. Carol Bales, OMB at *a130@omb.eop.gov.*

**SUPPLEMENTARY INFORMATION:** The Office of Management and Budget (OMB) is proposing to revise Circular No. A–130, *Managing Information as a Strategic Resource,* to incorporate new statutory requirements and enhanced technological capabilities, as well as address current and evolving technical and personnel security threats. Circular No. A–130 establishes general policy for the acquisition and management of information technology personnel, equipment, funds, and other resources. It also includes a discussion of agency responsibilities for managing personally identifiable information, provides guidance to support the use of electronic transactions, and discusses policy on protecting Federal information resources as appendices.

**Tony Scott,**

*Administrator, Office of the Federal Chief Information Officer.*

**Howard Shelanski,**

*Administrator, Office of Information and Regulatory Affairs.*

**Anne Rung,**

*Administrator, Office of Federal Procurement Policy.*

[FR Doc. 2015–26939 Filed 10–21–15; 8:45 am]

**BILLING CODE P**

## NATIONAL AERONAUTICS AND SPACE ADMINISTRATION

**[Notice: 15–095]**

### Aerospace Safety Advisory Panel; Charter Renewal

**AGENCY:** National Aeronautics and Space Administration (NASA).

**ACTION:** Notice of renewal and amendment of the charter of the Aerospace Safety Advisory Panel.

**SUMMARY:** Pursuant to sections 14(b)(1) and 9(c) of the Federal Advisory Committee Act (Pub. L. 92–463), and after consultation with the Committee Management Secretariat, General Services Administration, the NASA Administrator has determined that renewal and amendment of the charter of the Aerospace Safety Advisory Panel (ASAP) is in the public interest in connection with the performance of duties imposed on NASA by law. The renewed charter is for a two-year period ending August 26, 2017. It is identical to the previous charter in all respects except that it updates the reference to legal authority.

**FOR FURTHER INFORMATION CONTACT:** Ms. Marian Norris, ASAP Administrative Officer, Advisory Committee Management Division, Office of International and Interagency Relations, NASA Headquarters, Washington, DC 20546; phone: (202) 358–4452; email: *mnorris@nasa.gov.*

**Patricia D. Rausch,**

*Advisory Committee Management Officer, National Aeronautics and Space Administration.*

[FR Doc. 2015–26784 Filed 10–21–15; 8:45 am]

**BILLING CODE 7510–13–P**

## NATIONAL AERONAUTICS AND SPACE ADMINISTRATION

**[Notice: 15–096]**

### International Space Station National Laboratory Advisory Committee; Charter Renewal

**AGENCY:** National Aeronautics and Space Administration (NASA).

**ACTION:** Notice of renewal of the charter of the International Space Station National Laboratory Advisory Committee.

**SUMMARY:** Pursuant to sections 14(b)(1) an 9(c) of the Federal Advisory Committee Act (Pub. L. 92–463), and after consultation with the Committee Management Secretariat, General Services Administration, the NASA Administrator has determined that renewal of the charter of the International Space Station National Laboratory Advisory Committee is in the public interest in connection with the performance of duties imposed on NASA by law. The renewed charter is for a two-year period ending October 8, 2017. It is identical to the previous charter in all respects.

**FOR FURTHER INFORMATION CONTACT:** Ms. Marybeth A. Edeen, Executive Director, International Space Station National Laboratory Advisory Committee, NASA Johnson Space Center, Houston, TX; phone: (281) 483–9122; email: *marybeth.a.edeen@nasa.gov.*

**Patricia D. Rausch,**

*Advisory Committee Management Division, National Aeronautics and Space Administration.*

[FR Doc. 2015–26785 Filed 10–21–15; 8:45 am]

**BILLING CODE 7510–13–P**

## NATIONAL AERONAUTICS AND SPACE ADMINISTRATION

**[Notice: 15–098]**

### NASA Advisory Council; Institutional Committee; Meeting.

**AGENCY:** National Aeronautics and Space Administration.

**ACTION:** Notice of meeting.

**SUMMARY:** In accordance with the Federal Advisory Committee Act (Pub. L. 92–463), the National Aeronautics and Space Administration announces a meeting of the Institutional Committee of the NASA Advisory Council (NAC). This committee reports to the NAC.

**DATES:** Tuesday, November 17, 2015, 9:00 a.m.–5:00 p.m., Local Time; and Wednesday, November 18, 2015, 9:00 a.m.–4:00 p.m.; Local Time.

**ADDRESSES:** On Tuesday, November 17, 2015, the Institutional Committee meeting will be held at NASA Headquarters, Room 1Q39 [Glennan Conference Room], 300 E Street SW., Washington, DC 20546. On Wednesday, November 18, 2015, the Institutional Committee meeting will be held at NASA Goddard Space Flight Center, Building 1, Room E100, 8800 Greenbelt Road, Greenbelt, MD 20771.

**FOR FURTHER INFORMATION CONTACT:** Mr. Todd Mullins, NAC Institutional Committee Executive Secretary, NASA Headquarters, Washington, DC 20546; phone: (202) 358–3831; email: *todd.mullins@nasa.gov.*

**SUPPLEMENTARY INFORMATION:** The meeting will be open to the public up to the seating capacity of the room. This meeting is also available telephonically and by WebEx. You must use a touch-tone phone to participate in this meeting. Any interested person may dial the toll free access number (844) 467–6272 or toll access number (720) 259–6462, and then the numeric participant passcode: 180093 followed by the # sign. To join via WebEx on November 17, the Web link is *https://nasa.webex.com/,* the meeting number is 992 539 046 and the password is Meeting2015! (Password is case sensitive.) To join via WebEx on November 18, the link is *https://nasa.webex.com/,* the meeting number is 995 907 089 and the password is Meeting2015! (Password is case sensitive.) NOTE: If dialing in, please ''mute'' your telephone. The agenda for the meeting includes the following topics:

- Business Systems Assessment (BSA) Status
- NASA Facilities
- NASA IT Security
- NASA Goddard Space Flight Center Overview
- NASA Pathways Program

Attendees will be requested to sign a register and to comply with NASA Headquarters and NASA Goddard Space Flight Center (GSFC) security requirements, including the presentation of a valid picture ID before receiving access to NASA Headquarters and GSFC. Due to the Real ID Act, Public Law 109–13, any attendees with drivers licenses issued from non-compliant states/territories must present a second form of ID. [Federal employee badge; passport; active military identification card; enhanced driver's license; U.S. Coast Guard Merchant Mariner card; Native American tribal document; school identification accompanied by an item from LIST C (documents that establish employment authorization) from the ''List of the Acceptable Documents'' on Form I–9]. Non-compliant states/territories are: American Samoa, Arizona, Idaho, Louisiana, Maine, Minnesota, New Hampshire, and New York. Foreign nationals attending this meeting will be required to provide a copy of their passport and visa in addition to providing the following information no less than 10 working days prior to the meeting: Full name; gender; date/place of birth; citizenship; passport information (number, country, telephone); visa information (number, type, expiration date); employer/affiliation information (name of institution, address, country, telephone); title/position of attendee. To expedite admittance, attendees with U.S. citizenship and Permanent Residents (green card holders) can provide full name and citizenship status no less than 3 working days prior to the meeting by contacting Ms. Mary Dunn, via email at *mdunn@nasa.gov* or by telephone at (202) 358–2789. It is imperative that the meeting be held on this date to accommodate the scheduling priorities of the key participants.

**Patricia D. Rausch,**

*Advisory Committee Management Officer, National Aeronautics and Space Administration.*

[FR Doc. 2015–26787 Filed 10–21–15; 8:45 am]

**BILLING CODE 7510–13–P**

## NATIONAL AERONAUTICS AND SPACE ADMINISTRATION

**[Notice: 15–097]**

### NASA Advisory Council; Aeronautics Committee Meeting

**AGENCY:** National Aeronautics and Space Administration.

**ACTION:** Notice of meeting.

**SUMMARY:** In accordance with the Federal Advisory Committee Act (Public Law 92–463), the National Aeronautics and Space Administration announces a meeting of the Aeronautics Committee of the NASA Advisory Council (NAC). This committee reports to the NAC.

**DATES:** Thursday, November 12, 2015, 9:30 a.m.–5:00 p.m., Local Time.

**ADDRESSES:** NASA Headquarters, Room 6E40, 300 E Street, SW., Washington, DC 20546.

**FOR FURTHER INFORMATION CONTACT:** Ms. Brenda L. Mulac, NAC Aeronautics Committee Executive Secretary, NASA Headquarters, Washington, DC 20546; phone: (202) 358–1578; email: *brenda.l.mulac@nasa.gov.*

**SUPPLEMENTARY INFORMATION:** The meeting will be open to the public up to the capacity of the room. This meeting is also available telephonically and by WebEx. You must use a touch-tone phone to participate in this meeting. Any person interested in participating in the meeting by telephone and WebEx should contact Ms. Brenda L. Mulac at (202) 358–1578 for the web link, toll-free number and password. (Password is case-sensitive.) NOTE: If dialing in, please ''mute'' your telephone. The agenda for the meeting includes the following topics:

- Vertical Lift Planning
- Aeronautics Research Data Access Approach
- Convergent Aeronautical Solutions Project

Attendees will be requested to sign a register and to comply with NASA security requirements, including the presentation of a valid picture ID, before receiving access to NASA Headquarters. Due to the Real ID Act, Public Law 109–13, any attendees with drivers licenses issued from non-compliant states/territories must present a second form of ID. [Federal employee badge; passport; active military identification card; enhanced driver's license; U.S. Coast Guard Merchant Mariner card; Native American tribal document; school identification accompanied by an item from LIST C (documents that establish employment authorization) from the ''List of the Acceptable Documents'' on Form I–9]. Non-compliant states/territories are: American Samoa, Arizona, Idaho, Louisiana, Maine, Minnesota, New Hampshire, and New York. Foreign nationals attending this meeting will be required to provide a copy of their passport and visa in addition to providing the following information no less than 10 working days prior to the meeting: full name; gender; date/place of birth; citizenship; visa information (number, type, expiration date); passport information (number, country, expiration date); employer/affiliation information (name of institution, address, country, telephone); title/position of attendee; and home address to Ms. Brenda L. Mulac, via fax at (202) 358–3602. U.S. citizens and Permanent Residents (green card holders) are requested to submit their name and affiliation no less than 3 working days prior to the meeting to Ms. Brenda L. Mulac. For questions, please call Ms. Brenda L. Mulac at (202) 358–1578. It is imperative that these meetings be held on this date to accommodate the scheduling priorities of the key participants.

**Patricia D. Rausch,**

*Advisory Committee Management Officer, National Aeronautics and Space Administration.*

[FR Doc. 2015–26786 Filed 10–21–15; 8:45 am]

**BILLING CODE 7510–13–P**

## NATIONAL SCIENCE FOUNDATION

### Comment Request: Biological Sciences Proposal Classification Form

**AGENCY:** National Science Foundation.

**ACTION:** Notice.

**SUMMARY:** The National Science Foundation (NSF) is announcing plans to renew clearance of this collection. In accordance with the requirement of Section 3506(c)(2)(A) of the Paperwork Reduction Act of 1995, we are providing opportunity for public comment on this action. After obtaining and considering public comment, NSF will prepare the submission requesting OMB clearance of this collection for no longer than 3 years.

Comments are invited on: (a) Whether the proposed collection of information is necessary for the proper performance of the functions of the Agency, including whether the information shall have practical utility; (b) the accuracy of the Agency's estimate of the burden of the proposed collection of information; (c) ways to enhance the quality, utility, and clarity of the information on respondents, including through the use of automated collection techniques or other forms of information technology; and (d) ways to minimize the burden of the collection of information on respondents, including through the use of automated collection techniques or other forms of information technology.

**DATES:** Written comments should be received by December 21, 2015 to be assured of consideration. Comments received after that date will be considered to the extent practicable.

**ADDRESSES:** Written comments regarding the information collection and requests for copies of the proposed information collection request should be addressed to Suzanne Plimpton, Reports Clearance Officer, National Science Foundation, 4201 Wilson Blvd., Rm. 1265, Arlington, VA 22230, or by email to *splimpto@nsf.gov.*

**FOR FURTHER INFORMATION CONTACT:** Suzanne Plimpton on (703) 292–7556 or send email to *splimpto@nsf.gov.* Individuals who use a telecommunications device for the deaf (TDD) may call the Federal Information Relay Service (FIRS) at 1–800–877–8339, which is accessible 24 hours a day, 7 days a week, 365 days a year (including federal holidays).

**SUPPLEMENTARY INFORMATION:**

*Title of Collection:* ''Biological Sciences Proposal Classification Form''

*OMB Approval Number:* 3145–0203.

*Expiration Date of Approval:* December 31, 2015.

*Type of Request:* Intent to seek approval to renew an information collection for three years.

*Proposed Project:* Five organizational units within the Directorate of Biological Sciences of the National Science Foundation will use the Biological Sciences Proposal Classification Form. They are the Division of Biological Infrastructure (DBI), the Division of Environmental Biology (DEB), the Division of Molecular and Cellular Biosciences (MCB), the Division of Integrative Organismal Systems IOS) and Emerging Frontiers (EF). All scientists submitting proposals to these units will be asked to complete an electronic version of the Proposal Classification Form. The form consists of brief questions about the substance of the research and the investigator's previous federal support. Each division will have a slightly different version of the form. In this way, submitters will only confront response choices that are relevant to their discipline.

*Use of the Information:* The information gathered with the Biological Sciences Proposal Classification Form serves two main purposes. The first is facilitation of the proposal review

process. Since peer review is a key component of NSF's grant-making process, it is imperative that proposals are reviewed by scientists with appropriate expertise. The information collected with the Proposal Classification Form helps ensure that the proposals are evaluated by specialists who are well versed in appropriate subject matter. This helps maintain a fair and equitable review process.

The second use of the information is program evaluation. The Directorate is committed to investing in a range of substantive areas. With data from this collection, the Directorate can calculate submission rates and funding rates in specific areas of research. Similarly, the information can be used to identify emerging areas of research, evaluate changing infrastructure needs in the research community, and track the amount of international research. As the National Science Foundation is committed to funding cutting-edge science, these factors all have implications for program management.

The Directorate of Biological Sciences has a continuing commitment to monitor its information collection in order to preserve its applicability and necessity. Through periodic updates and revisions, the Directorate ensures that only useful, non-redundant information is collected. These efforts will reduce excessive reporting burdens

*Burden on the Public:* The Directorate estimates that an average of five minutes is expended for each proposal submitted. An estimated 6,500 responses are expected during the course of one year for a total of 542 public burden hours annually.

*Expected Respondents:* Individuals.

*Estimated Number of Responses:* 6,500.

*Estimated Number of Respondents:* 6,500.

*Estimated Total Annual Burden on Respondents:* 542 hours.

*Frequency of Responses:* On occasion.

Dated: October 19, 2015.

**Suzanne H. Plimpton,**

*Reports Clearance Officer, National Science Foundation.*

[FR Doc. 2015–26822 Filed 10–21–15; 8:45 am]

BILLING CODE 7555–01–P

## NUCLEAR REGULATORY COMMISSION

**[Docket No. 50–608; NRC–2013–0053]**

## Construction Permit Application for the SHINE Medical Radioisotope Production Facility

**AGENCY:** Nuclear Regulatory Commission.

**ACTION:** Environmental impact statement; issuance.

**SUMMARY:** The U.S. Nuclear Regulatory Commission (NRC) is issuing a final Environmental Impact Statement (EIS) for the Construction Permit Application submitted by SHINE Medical Technologies, Inc. (SHINE) for the SHINE Medical Radioisotope Production Facility, NUREG–2183 (SHINE facility).

**DATES:** The final EIS for the SHINE Construction Permit is available as of October 16, 2015.

**ADDRESSES:** Please refer to Docket ID NRC–2013–0053 when contacting the NRC about the availability of information regarding this document. You may obtain publicly-available information related to this document using any of the following methods:

- *Federal Rulemaking Web site:* Go to *http://www.regulations.gov* and search for Docket ID NRC–2013–0053. Address questions about NRC dockets to Carol Gallagher; telephone: 301–415–3463; email: *Carol.Gallagher@nrc.gov.* For technical questions, contact the individual listed in the **FOR FURTHER INFORMATION CONTACT** section of this document.
- *NRC's Agencywide Documents Access and Management System (ADAMS):* You may obtain publicly-available documents online in the ADAMS Public Documents collection at *http://www.nrc.gov/reading-rm/adams.html.* To begin the search, select ''*ADAMS Public Documents*'' and then select ''*Begin Web-based ADAMS Search.*'' For problems with ADAMS, please contact the NRC's Public Document Room (PDR) reference staff at 1–800–397–4209, 301–415–4737, or by email to *pdr.resource@nrc.gov.* The final EIS for the SHINE Construction Permit is available in ADAMS under Accession No. ML15288A046.
- *NRC's PDR:* You may examine and purchase copies of public documents at the NRC's PDR, Room O1–F21, One White Flint North, 11555 Rockville Pike, Rockville, Maryland 20852.

**FOR FURTHER INFORMATION CONTACT:** Michelle Moser, Office of Nuclear Reactor Regulation, U.S. Nuclear Regulatory Commission, Washington, DC 20555–0001; telephone: 301–415–6509; email: *Michelle.Moser@nrc.gov.*

**SUPPLEMENTARY INFORMATION:**

### I. Background

In accordance with § 51.118 of title 10 of the *Code of Federal Regulations* (10 CFR), the NRC is making available the final EIS for the Construction Permit Application submitted for the SHINE facility. The NRC published the draft EIS in the NRC in the **Federal Register** on May 14, 2015 (80 FR 27710), and the Environmental Protection Agency noticed the availablity of the draft EIS on May 22, 2015 (80 FR 29701). The public comment period on the draft EIS ended on July 6, 2015, and the comments received are addressed in the final EIS (Accession No. ML15288A046). The final EIS is available as indicated in the **ADDRESSES** section of this document.

### II. Discussion

As discussed in Chapter 6 of the final EIS, after weighing the environmental, economic, technical, and other benefits against environmental and other costs, and considering reasonable alternatives, the NRC staff recommends the issuance of the Construction Permit to SHINE, unless safety issues mandate otherwise. This recommendation is based on: (1) SHINE's Environmental Report; (2) the NRC staff's consultation with Federal, State, and local agencies; (3) the NRC staff's independent environmental review; and (4) the NRC staff's consideration of public comments.

Dated at Rockville, Maryland, this 16th day of October 2015.

For the Nuclear Regulatory Commission.

**David J. Wrona,**

*Chief, Environmental Review and Guidance Branch, Division of License Renewal, Office of Nuclear Reactor Regulation.*

[FR Doc. 2015–26860 Filed 10–21–15; 8:45 am]

BILLING CODE 7590–01–P

## NUCLEAR REGULATORY COMMISSION

## Advisory Committee on Reactor Safeguards (ACRS) Meeting of the ACRS Subcommittee on Metallurgy and Reactor Fuels; Notice of Meeting

The ACRS Subcommittee on Metallurgy and Reactor Fuels will hold a meeting on November 3, 2015, Room T–2B1, 11545 Rockville Pike, Rockville, Maryland.

The meeting will be open to public attendance.

The agenda for the subject meeting shall be as follows:

**Tuesday, November 3, 2015—8:30 a.m. until 5:00 p.m.**

The Subcommittee will discuss the Draft Final Rule for 10 CFR 50.46c. The Subcommittee will hear presentations by and hold discussions with the NRC staff and other interested persons regarding this matter. The Subcommittee will gather information, analyze relevant issues and facts, and formulate proposed positions and actions, as appropriate, for deliberation by the Full Committee.

Members of the public desiring to provide oral statements and/or written comments should notify the Designated Federal Official (DFO), Christopher Brown (Telephone 301–415–7111 or Email: *Christopher.Brown@nrc.gov*) five days prior to the meeting, if possible, so that appropriate arrangements can be made. Thirty-five hard copies of each presentation or handout should be provided to the DFO thirty minutes before the meeting. In addition, one electronic copy of each presentation should be emailed to the DFO one day before the meeting. If an electronic copy cannot be provided within this timeframe, presenters should provide the DFO with a CD containing each presentation at least thirty minutes before the meeting. Electronic recordings will be permitted only during those portions of the meeting that are open to the public. Detailed procedures for the conduct of and participation in ACRS meetings were published in the **Federal Register** on October 1, 2014 (79 FR 59307).

Detailed meeting agendas and meeting transcripts are available on the NRC Web site at *http://www.nrc.gov/reading-rm/doc-collections/acrs.* Information regarding topics to be discussed, changes to the agenda, whether the meeting has been canceled or rescheduled, and the time allotted to present oral statements can be obtained from the Web site cited above or by contacting the identified DFO. Moreover, in view of the possibility that the schedule for ACRS meetings may be adjusted by the Chairman as necessary to facilitate the conduct of the meeting, persons planning to attend should check with these references if such rescheduling would result in a major inconvenience.

If attending this meeting, please enter through the One White Flint North building, 11555 Rockville Pike, Rockville, MD. After registering with security, please contact Mr. Theron Brown (Telephone 240–888–9835) to be escorted to the meeting room.

Dated: October 14, 2015.

**Peter Wen,**

*Acting Chief, Technical Support Branch, Advisory Committee on Reactor Safeguards.*

[FR Doc. 2015–26735 Filed 10–21–15; 8:45 am]

**BILLING CODE 7590–01–P**

## PENSION BENEFIT GUARANTY CORPORATION

### Submission of Information Collection for OMB Review; Comment Request; Qualified Domestic Relations Orders Submitted to PBGC

**AGENCY:** Pension Benefit Guaranty Corporation.

**ACTION:** Notice of request for extension of OMB approval.

**SUMMARY:** Pension Benefit Guaranty Corporation (''PBGC'') is requesting that the Office of Management and Budget (''OMB'') extend approval, under the Paperwork Reduction Act, of the collection of information in PBGC's booklet *Qualified Domestic Relations Orders & PBGC* (OMB control number 1212–0054; expires October 31, 2015). This notice informs the public of PBGC's request and solicits public comment on the collection of information.

**DATES:** Comments should be submitted by November 23, 2015.

**ADDRESSES:** Comments should be sent to the Office of Information and Regulatory Affairs, Office of Management and Budget, Attention: Desk Officer for Pension Benefit Guaranty Corporation, via electronic mail at *OIRA_DOCKET@omb.eop.gov* or by fax to (202) 395–6974.

A copy of PBGC's request may be obtained without charge by writing to the Disclosure Division of the Office of the General Counsel of PBGC at the above address or by visiting that office or calling (202) 326–4040 during normal business hours. (TTY and TDD users may call the Federal relay service toll free at 1-(800) 877–8339 and ask to be connected to (202) 326–4040.) The request is also available at *http://www.pbgc.gov/prac/laws-and-regulations/information-collections-under-omb-review.html.* The current QDRO booklet is available on PBGC's Web site at *http://www.pbgc.gov/wr/benefits/qdro.html.*

**FOR FURTHER INFORMATION CONTACT:** Jo Amato Burns, Attorney, Office of General Counsel, Pension Benefit Guaranty Corporation, 1200 K Street NW., Washington, DC 20005–4026, 202–326–4400. (TTY and TDD users may call the Federal relay service toll-free at 1–800–877–8339 and ask to be connected to 202–326–4400.)

**SUPPLEMENTARY INFORMATION:** PBGC is requesting that OMB extend its approval of the guidance and model language and forms contained in the PBGC booklet, *Qualified Domestic Relations Orders & PBGC.*

A defined benefit pension plan that does not have enough money to pay benefits may be terminated if the employer responsible for the plan faces severe financial difficulty, such as bankruptcy, and is unable to maintain the plan. In such an event, PBGC becomes trustee of the plan and pays benefits, subject to legal limits, to plan participants and beneficiaries.

The benefits of a pension plan participant generally may not be assigned or alienated. However, Title I of ERISA provides an exception for domestic relations orders that relate to child support, alimony payments, or the marital property rights of an alternate payee (a spouse, former spouse, child, or other dependent of a plan participant). The exception applies only if the domestic relations order meets specific legal requirements that make it a qualified domestic relations order, or ''QDRO.''

ERISA provides that pension plans are required to comply with only those domestic relations orders which are QDROs, and that the decision as to whether a domestic relations order is a QDRO is made by the plan administrator. When PBGC is trustee of a plan, it reviews submitted domestic relations orders to determine whether the order is qualified before paying benefits to an alternate payee. The requirements for submitting a QDRO are established by statute.

To simplify the process, PBGC has included model QDROs and accompanying guidance in a booklet, *Qualified Domestic Relations Orders & PBGC.* The models and guidance assist parties by making it easier to comply with ERISA's QDRO requirements when drafting orders for plans trusteed by PBGC. The booklet does not create any additional requirements.

PGBC is not making any substantive revisions to the current QDRO booklet. PGBC is adding text to clarify how separate interest orders are administered by PBGC and to explain how PBGC apportions adjustments required by ERISA's Title IV limitations on benefits between an alternate payee and a participant, as well as the consequences of such adjustments on each party. PBGC is also making other simplifying and clarifying changes to the QDRO booklet.

The collection of information has been approved through October 31, 2015, by OMB under control number 1212–0054. PBGC is requesting that OMB extend approval of the collection of information for three years. An agency may not conduct or sponsor, and a person is not required to respond to, a collection of information unless it displays a currently valid OMB control number.

PBGC estimates that it will receive 1,170 domestic relations orders annually and that the average annual burden of this collection of information is 2,117 hours and $704,500.

Issued in Washington, DC, this 19 day of October 2015.

**Judith Starr,**

*General Counsel, Pension Benefit Guaranty Corporation.*

[FR Doc. 2015–26858 Filed 10–21–15; 8:45 am]

BILLING CODE 7709–02–P

## POSTAL REGULATORY COMMISSION

**[Docket No. CP2016–8; Order No. 2760]**

## New Postal Product

**AGENCY:** Postal Regulatory Commission.

**ACTION:** Notice.

**SUMMARY:** The Commission is noticing a recent Postal Service filing concerning an additional Global Expedited Package Services 3 negotiated service agreement. This notice informs the public of the filing, invites public comment, and takes other administrative steps.

**DATES:** *Comments are due:* October 23, 2015.

**ADDRESSES:** Submit comments electronically via the Commission's Filing Online system at *http://www.prc.gov.* Those who cannot submit comments electronically should contact the person identified in the **FOR FURTHER INFORMATION CONTACT** section by telephone for advice on filing alternatives.

**FOR FURTHER INFORMATION CONTACT:** David A. Trissell, General Counsel, at 202–789–6820.

**SUPPLEMENTARY INFORMATION:**

### Table of Contents

I. Introduction
II. Notice of Commission Action
III. Ordering Paragraphs

### I. Introduction

On October 15, 2015, the Postal Service filed notice that it has entered into an additional Global Expedited Package Services 3 (GEPS 3) negotiated service agreement (Agreement).[1]

To support its Notice, the Postal Service filed a copy of the Agreement, a copy of the Governors' Decision authorizing the product, a certification of compliance with 39 U.S.C. 3633(a), and an application for non-public treatment of certain materials. It also filed supporting financial workpapers.

### II. Notice of Commission Action

The Commission establishes Docket No. CP2016–8 for consideration of matters raised by the Notice.

The Commission invites comments on whether the Postal Service's filing is consistent with 39 U.S.C. 3632, 3633, or 3642, 39 CFR part 3015, and 39 CFR part 3020, subpart B. Comments are due no later than October 23, 2015. The public portions of the filing can be accessed via the Commission's Web site (*http://www.prc.gov*).

The Commission appoints Curtis E. Kidd to serve as Public Representative in this docket.

### III. Ordering Paragraphs

*It is ordered:*

1. The Commission establishes Docket No. CP2016–8 for consideration of the matters raised by the Postal Service's Notice.

2. Pursuant to 39 U.S.C. 505, Curtis E. Kidd is appointed to serve as an officer of the Commission to represent the interests of the general public in this proceeding (Public Representative).

3. Comments are due no later than October 23, 2015.

4. The Secretary shall arrange for publication of this order in the **Federal Register**.

By the Commission.

**Ruth Ann Abrams,**

*Acting Secretary.*

[FR Doc. 2015–26818 Filed 10–21–15; 8:45 am]

BILLING CODE 7710–FW–P

[1] Notice of United States Postal Service of Filing a Functionally Equivalent Global Expedited Package Services 3 Negotiated Service Agreement and Application for Non-Public Treatment of Materials Filed Under Seal, October 15, 2015 (Notice).

## SECURITIES AND EXCHANGE COMMISSION

**[Release No. 34–76174; File No. SR–NYSEArca–2015–74]**

## Self-Regulatory Organizations; NYSE Arca, Inc.; Notice of Designation of a Longer Period for Commission Action on Proposed Rule Change Regarding a Change to the Reference Index of the Market Vectors Short High Yield Municipal Index ETF

October 16, 2015.

On August 27, 2015, NYSE Arca, Inc. filed with the Securities and Exchange Commission (''Commission''), pursuant to Section 19(b)(1) of the Securities Exchange Act of 1934 (''Act'')[1] and Rule 19b–4 thereunder,[2] a proposed rule change to reflect a change to the reference index relating to the Market Vectors Short High Yield Municipal Index ETF. The proposed rule change was published for comment in the **Federal Register** on September 16, 2015.[3] The Commission received no comment letters on the proposed rule change.

Section 19(b)(2) of the Act[4] provides that, within 45 days of the publication of notice of the filing of a proposed rule change, or within such longer period up to 90 days as the Commission may designate if it finds such longer period to be appropriate and publishes its reasons for so finding or as to which the self-regulatory organization consents, the Commission shall either approve the proposed rule change, disapprove the proposed rule change, or institute proceedings to determine whether the proposed rule change should be disapproved. The Commission is extending this 45-day time period.

The Commission finds that it is appropriate to designate a longer period within which to take action on the proposed rule change so that it has sufficient time to consider the proposed rule change. Accordingly, the Commission, pursuant to Section 19(b)(2) of the Act,[5] designates December 15, 2015, as the date by which the Commission should either approve or disapprove or institute proceedings to determine whether to disapprove the proposed rule change (File Number SR–NYSEArca-2015–74).

[1] 15 U.S.C. 78s(b)(1).

[2] 17 CFR 240.19b–4.

[3] *See* Securities Exchange Act Release No. 75888 (September 10, 2015), 80 FR 55701.

[4] 15 U.S.C. 78s(b)(2).

[5] *Id.*

For the Commission, by the Division of Trading and Markets, pursuant to delegated authority.[6]

**Brent J. Fields,**

*Secretary.*

[FR Doc. 2015–26807 Filed 10–21–15; 8:45 am]

**BILLING CODE 8011–01–P**

## SECURITIES AND EXCHANGE COMMISSION

**[Release No. 34–76062; File No. SR–OCC–2015–803]**

## Self-Regulatory Organizations; the Options Clearing Corporation; Notice of Filing of Advance Notice of and No Objection to the Options Clearing Corporation's Proposal To Enter a New Credit Facility Agreement

October 1, 2015.

Pursuant to Section 806(e)(1) of Title VIII of the Dodd-Frank Wall Street Reform and Consumer Protection Act entitled the Payment, Clearing, and Settlement Supervision Act of 2010 (''Clearing Supervision Act'')[1] and Rule 19b–4(n)(1)(i)[2] under the Securities Exchange Act of 1934 (''Exchange Act''), notice is hereby given that, on September 10, 2015, The Options Clearing Corporation (''OCC'') filed an advance notice (SR–OCC–2015–803) with the Securities and Exchange Commission (''Commission''). The advance notice is described in Items I and II below, which Items have been prepared by OCC. The Commission is publishing this notice to solicit comments on the advance notice from interested persons, and to provide notice that the Commission does not object to the changes set forth in the advance notice and authorizes OCC to implement those changes earlier than 60 days after the filing of the advance notice.

### I. Clearing Agency's Statement of the Terms of Substance of the Advance Notice

This advance notice is filed by OCC in connection with a proposed change to its operations to replace an existing credit facility OCC maintains for the purposes of meeting obligations arising out of the default or suspension of a clearing member, in anticipation of a potential default by a clearing member, or the failure of a bank or securities or commodities clearing organization to perform its obligations due to its bankruptcy, insolvency, receivership or suspension of operations.

[6] 17 CFR 200.30–3(a)(31).

[1] 12 U.S.C. 5465(e)(1).

[2] 17 CFR 240.19b–4(n)(1)(i).

### II. Clearing Agency's Statement of the Purpose of, and Statutory Basis for, the Advance Notice

In its filing with the Commission, OCC included statements concerning the purpose of and basis for the advance notice and discussed any comments it received on the advance notice. The text of these statements may be examined at the places specified in Item IV below. OCC has prepared summaries, set forth in sections A and B below, of the most significant aspects of these statements.

*A. Clearing Agency's Statement on Comments on the Advance Notice Received From Members, Participants or Others*

Written comments were not and are not intended to be solicited with respect to the advance notice and none have been received.

*B. Advance Notice Filed Pursuant to Section 806(e) of the Clearing Supervision Act*

(i) Description of Change

This advance notice is being filed in connection with a proposed change in the form of the replacement of a revolving credit facility that OCC maintains for a 364-day term for the purpose of meeting obligations arising out of the default or suspension of a clearing member, in anticipation of a potential default by a clearing member, or the failure of a bank or securities or commodities clearing organization to perform its obligations due to its bankruptcy, insolvency, receivership or suspension of operations. OCC's existing credit facility (the ''Existing Facility'') was implemented on October 7, 2014 through the execution of a Credit Agreement among OCC, JPMorgan Chase Bank, N.A. (''JP Morgan''), as administrative agent, and the lenders that are parties to the agreement from time to time. The Existing Facility provides short-term secured borrowings in an aggregate principal amount of $2 billion but may be increased to $3 billion if OCC so requests and sufficient commitments from lenders are received and accepted. To obtain a loan under the Existing Facility, OCC must pledge as collateral U.S. dollars or certain securities issued or guaranteed by the U.S. Government or the Government of Canada. Certain mandatory prepayments or deposits of additional collateral are required depending on changes in the collateral's market value. In connection with OCC's past implementation of the Existing Facility, OCC filed an advance notice with the Commission on September 11, 2014, and the Commission published a notice of no objection on September 30, 2014.[3]

The Existing Facility is set to expire on October 6, 2015, and OCC is therefore currently negotiating the terms of a new credit facility (the ''New Facility'') on substantially similar terms as the Existing Facility, except that a new administrative agent, Bank of America, N.A. (''Bank of America''), has been selected and OCC anticipates that U.S. Bank National Association (''U.S. Bank'') will act as collateral agent, joint lead arranger and joint book runner. Under the Existing Facility, both of these roles are performed by JP Morgan. OCC also anticipates that The Bank of Tokyo-Mitsubishi UFJ, Ltd. (''Bank of Tokyo Mitsubishi'') will act as a back-up administrative agent and collateral agent as well as joint lead arranger and joint book runner. On September 9, 2015, OCC, Bank of America, Merrill Lynch, Pierce, Fenner & Smith Incorporated (''MLPF&S''), a joint lead arranger and book runner, U.S. Bank and Bank of Tokyo Mitsubishi executed a Commitment Letter with regard to the New Facility.

The terms and conditions applicable to the New Facility are set forth in the Summary of Terms and Conditions, which is not a public document.[4] OCC has separately submitted a request for confidential treatment to the Commission regarding the Summary of Terms and Conditions, which is included in this filing as Exhibit 3. The conditions regarding the availability of the New Facility, which OCC anticipates will be satisfied on or before October 6, 2015, include the execution and delivery of (i) a credit agreement between OCC and the administrative agent, collateral agent and various lenders under the New Facility, (ii) a pledge agreement between OCC and the administrative agent or collateral agent, and (iii) such other documents as may be required by the parties. The definitive documentation concerning the New Facility is expected to be consistent with the Summary of Terms and Conditions and substantially similar to that concerning the Existing Facility, although it will include certain changes to accommodate the use of accounts at a new collateral agent and certain other changes as may be necessary regarding administrative and operational terms being finalized

[3] *See* Securities Exchange Act Release No. 73257 (September 30, 2014), 79 FR 60214 (October 6, 2014) (SR–OCC–2014–806).

[4] The Summary of Terms and Conditions for the New Facility clarifies certain terms regarding mandatory prepayments or deposits of additional collateral, which, as described above, are also features of the Existing Facility.

between the parties. Mainly, and in order to effect a borrowing under the New Facility, OCC would pledge collateral to the collateral agent for the benefit of the administrative agent.

The New Facility involves a variety of customary fees payable by OCC, including: (1) An arrangement fee payable to the joint lead arrangers; (2) administrative and collateral agent fees payable to the administrative agent and collateral agent if the New Facility closes; (3) upfront commitment fees payable to the lenders based on the amount of their commitments; and (4) an ongoing quarterly commitment fee based on the unused amount of the New Facility.

(ii) Anticipated Effect on and Management of Risk

Completing timely settlement is a key aspect of OCC's role as a clearing agency performing central counterparty services. Overall, the New Facility would continue to promote the reduction of risks to OCC, its clearing members and the options market in general because it would allow OCC to obtain short-term funds to address liquidity demands arising out of the default or suspension of a clearing member, in anticipation of a potential default or suspension of clearing members or the insolvency of a bank or another securities or commodities clearing organization. The existence of the New Facility would therefore help OCC minimize losses in the event of such a default, suspension or insolvency, by allowing it to obtain funds on extremely short notice to ensure clearance and settlement of transactions in options and other contracts without interruption. OCC believes that the reduced settlement risk presented by OCC resulting from the New Facility would correspondingly reduce systemic risk and promote the safety and soundness of the clearing system. By drawing on the New Facility, OCC would also be able to avoid liquidating margin or clearing fund assets in what would likely be volatile market conditions, which would preserve funds available to cover any losses resulting from the failure of a clearing member, bank or other clearing organization. Because the New Facility preserves substantially the same terms and conditions as the Existing Facility, OCC believes that the change would not otherwise affect or alter the management of risk at OCC.

(iii) Consistency With the Clearing Supervision Act

OCC believes that the New Facility is consistent with Section 805(b) of the Clearing Supervision Act [5] because it promotes robust risk management by OCC of settlement and liquidity risk. The New Facility would promote robust risk management of these risks by providing OCC with timely access to a stable and reliable liquidity funding source to help it complete timely clearing and settlement.

(iv) Accelerated Commission Action Requested

Pursuant to Section 806(e)(1)(I) of the Clearing Supervision Act,[6] OCC requests that the Commission notify OCC that it has no objection to the New Facility not later than Friday, October 2, which is four days prior to the October 6, 2015 effective date of the New Facility. OCC requests Commission action four days in advance of the effective date in order to ensure that there is no period of time that OCC operates without this essential liquidity resource, given its importance to OCC's borrowing capacity in connection with its management of liquidity and settlement risk and timely completion of clearance and settlement.

## III. Date of Effectiveness of the Advance Notice and Timing for Commission Action

The proposed change may be implemented if the Commission does not object to the proposed change within 60 days of the later of (i) the date that the proposed change was filed with the Commission or (ii) the date that any additional information requested by the Commission is received. OCC shall not implement the proposed change if the Commission has any objection to the proposed change.

The Commission may extend the period for review by an additional 60 days if the proposed change raises novel or complex issues, subject to the Commission providing the OCC with prompt written notice of the extension. A proposed change may be implemented in less than 60 days from the date the advance notice is filed, or the date further information requested by the Commission is received, if the Commission notifies OCC in writing that it does not object to the proposed change and authorizes OCC to implement the proposed change on an earlier date, subject to any conditions imposed by the Commission.

OCC shall post notice on its Web site of proposed changes that are implemented.

The proposal shall not take effect until all regulatory actions required with respect to the proposal are completed.

## IV. Solicitation of Comments

Interested persons are invited to submit written data, views and arguments concerning the foregoing, including whether the advance notice is consistent with the Clearing Supervision Act. Comments may be submitted by any of the following methods:

*Electronic Comments*

- Use the Commission's Internet comment form (*http://www.sec.gov/rules/sro.shtml*); or
- Send an email to *rule-comments@sec.gov*. Please include File Number SR–OCC–2015–803 on the subject line.

*Paper Comments*

- Send paper comments in triplicate to Brent J. Fields, Secretary, Securities and Exchange Commission, 100 F Street NE., Washington, DC 20549–1090.

All submissions should refer to File Number SR–OCC–2015–803. This file number should be included on the subject line if email is used. To help the Commission process and review your comments more efficiently, please use only one method of submission. The Commission will post all comments on the Commission's Internet Web site (*http://www.sec.gov/rules/sro.shtml*). Copies of the submission, all subsequent amendments, all written statements with respect to the proposed change that are filed with the Commission, and all written communications relating to the proposed change between the Commission and any person, other than those that may be withheld from the public in accordance with the provisions of 5 U.S.C. 552, will be available for Web site viewing and printing in the Commission's Public Reference Section, 100 F Street, NE., Washington, DC 20549, on official business days between the hours of 10:00 a.m. and 3:00 p.m. Copies of such filing also will be available for inspection and copying at the principal office of OCC and on OCC's Web site at *http://www.theocc.com/components/docs/legal/rules_and_bylaws/sr_occ_15_803.pdf.*

All comments received will be posted without change; the Commission does not edit personal identifying information from submissions. You should submit only information that you wish to make available publicly. All submissions should refer to File Number SR–OCC–2015–803 and should be submitted on or before November 12, 2015.

[5] 12 U.S.C. 5464(b).

[6] 12 U.S.C. 5465(e)(1)(I).

**V. Commission's Findings and Notice of No Objection**

Although the Clearing Supervision Act does not specify a standard of review for an advance notice, its stated purpose is instructive.[7] The stated purpose is to mitigate systemic risk in the financial system and promote financial stability by, among other things, promoting uniform risk management standards for systemically important financial market utilities (''FMUs'') and strengthening the liquidity of systemically important FMUs.[8] Section 805(a)(2) of the Clearing Supervision Act[9] authorizes the Commission to prescribe risk management standards for the payment, clearing, and settlement activities of designated clearing entities and financial institutions engaged in designated activities for which it is the Supervisory Agency or the appropriate financial regulator. Section 805(b) of the Clearing Supervision Act[10] states that the objectives and principles for the risk management standards prescribed under Section 805(a) shall be to:

- promote robust risk management;
- promote safety and soundness;
- reduce systemic risks; and
- support the stability of the broader financial system.

The Commission has adopted risk management standards under Section 805(a)(2) of the Clearing Supervision Act[11] and the Exchange Act (''Clearing Agency Standards'').[12] The Clearing Agency Standards require registered clearing agencies to establish, implement, maintain, and enforce written policies and procedures that are reasonably designed to meet certain minimum requirements for their operations and risk management practices on an ongoing basis.[13] Therefore, it is appropriate for the Commission to review advance notices against these Clearing Agency Standards and the objectives and principles of these risk management standards as described in Section 805(b) of the Clearing Supervision Act.[14]

The Commission believes that the proposal in the advance notice is consistent with the Clearing Agency Standards, in particular, Exchange Act Rule 17Ad–22(d)(11) and Exchange Act Rule 17Ad–22(b)(3). Exchange Act Rule 17Ad–22(d)(11) requires that registered clearing agencies ''establish, implement, maintain and enforce written policies and procedures reasonably designed to, as applicable . . . establish default procedures that ensure that the clearing agency can take timely action to contain losses and liquidity pressures and to continue meeting its obligations in the event of a participant default.'' The Commission believes that the proposal is consistent with Exchange Act Rule 17Ad–22(d)(11) because the New Facility will allow OCC to obtain short-term funds to address liquidity demands arising out of the default or suspension of a clearing member, in anticipation of a potential default or suspension of clearing members or the insolvency of a bank or another securities or commodities clearing organization. Therefore, the New Facility should help OCC minimize losses in the event of such a default, suspension or insolvency, by allowing it to obtain funds on extremely short notice to ensure clearance and settlement of transactions in options and other contracts without interruption.

Exchange Act Rule 17Ad–22(b)(3) requires a central counterparty (''CCP''), to ''establish, implement, maintain and enforce written policies and procedures reasonably designed to . . . [m]aintain sufficient financial resources to withstand, at a minimum, a default by the participant family to which it has the largest exposure in extreme but plausible market conditions. . . .'' The Commission believes that the proposal is consistent with Exchange Act Rule 17Ad–22(b)(3) because OCC's proposal to enter into the New Facility, thereby ensuring continued access to a committed bank syndicated credit facility, will help OCC maintain sufficient financial resources to withstand, at a minimum, a default by an clearing member family to which it has the largest exposure.

For these reasons, the Commission believes the proposal contained in the advance notice is consistent with the objectives and principles described in Section 805(b) of the Clearing Supervision Act, including that it reduces systemic risks and promote the safety and soundness of the broader financial system. As discussed above, the New Facility will continue to promote the reduction of risks to OCC, its clearing members, and the options market in general because it will allow OCC to obtain short-term funds to address liquidity demands, which should ensure clearance and settlement of transactions in options and other contracts without interruption. Given that OCC has been designated as a systemically important FMU, its ability to access financial resources to address short-term liquidity demands contributes to reducing systemic risks and supporting the stability of the broader financial system.

For these reasons, stated above, the Commission does not object to the advance notice.

**VI. Conclusion**

*It is therefore noticed,* pursuant to Section 806(e)(1)(I) of the Clearing Supervision Act,[15] that the Commission does not object to the proposed change, and authorizes OCC to implement the change in the advance notice (SR–OCC–2015–803) as of the date of this notice.

By the Commission.

**Robert W. Errett,**

*Deputy Secretary.*

[FR Doc. 2015–26867 Filed 10–21–15; 8:45 am]

**BILLING CODE 8011–01–P**

[7] *See* 12 U.S.C. 5461(b).

[8] *Id.*

[9] 12 U.S.C. 5464(a)(2).

[10] 12 U.S.C. 5464(b).

[11] 12 U.S.C. 5464(a)(2).

[12] *See* Exchange Act Rule 17Ad–22. 17 CFR 240.17Ad–22. Securities Exchange Act Release No. 68080 (October 22, 2012), 77 FR 66220 (November 2, 2012) (S7–08–11).

[13] *Id.*

[14] 12 U.S.C. 5464(b).

[15] 12 U.S.C. 5465(e)(1)(I).

## SECURITIES AND EXCHANGE COMMISSION

### Sunshine Act Meeting

Notice is hereby given, pursuant to the provisions of the Government in the Sunshine Act, Public Law 94–409, that the Securities and Exchange Commission Equity Market Structure Advisory Committee will hold a public meeting on Tuesday, October 27, 2015, in the Multipurpose Room, LL–006 at the Commission's headquarters, 100 F Street NE., Washington, DC.

The meeting will begin at 9:30 a.m. (EDT) and will be open to the public. Seating will be on a first-come, first-served basis. Doors will be open at 9:00 a.m. Visitors will be subject to security checks. The meeting will be webcast on the Commission's Web site at *www.sec.gov.*

On October 6, 2015, the Commission published notice of the Committee meeting (Release No. 34–76081), indicating that the meeting is open to the public and inviting the public to submit written comments to the Committee. This Sunshine Act notice is being issued because a majority of the Commission may attend the meeting.

The agenda for the meeting will focus on Rule 610 of SEC Regulation NMS and the regulatory structure of trading venues.

For further information, please contact the Office of the Secretary at (202) 551–5400.

Dated: October 20, 2015.

**Brent J. Fields,**

*Secretary.*

[FR Doc. 2015–27066 Filed 10–20–15; 4:15 pm]

**BILLING CODE 8011–01–P**

## SECURITIES AND EXCHANGE COMMISSION

**[Release No. 34–76183; File No. S7–04–09]**

## Order Extending Temporary Conditional Exemption for Nationally Recognized Statistical Rating Organizations From Requirements of Rule 17g–5(A)(3) Under the Securities Exchange Act of 1934 and Request for Comment

October 16, 2015.

### I. Introduction

On May 19, 2010, the Securities and Exchange Commission (''Commission'') conditionally exempted, with respect to certain credit ratings and until December 2, 2010, nationally recognized statistical rating organizations (''NRSROs'') from certain requirements in Rule 17g–5(a)(3) [1] under the Securities Exchange Act of 1934 (''Exchange Act''), which had a compliance date of June 2, 2010.[2] Pursuant to the Order, an NRSRO is not required to comply with Rule 17g–5(a)(3) until December 2, 2010 with respect to credit ratings where: (1) The issuer of the structured finance product is a non-U.S. person; and (2) the NRSRO has a reasonable basis to conclude that the structured finance product will be offered and sold upon issuance, and that any arranger linked to the structured finance product will effect transactions of the structured finance product after issuance, only in transactions that occur outside the U.S. (''covered transactions'').[3] On November 23, 2010, the Commission extended the conditional temporary exemption until December 2, 2011.[4] On November 16, 2011, the Commission extended the conditional temporary exemption until December 2, 2012.[5] On November 26, 2012, the Commission extended the conditional temporary exemption until December 2, 2013.[6] On November 22, 2013, the Commission extended the conditional temporary exemption until December 2, 2014.[7] On November 19, 2014, the Commission extended the conditional temporary exemption until December 2, 2015.[8] The Commission is extending the temporary conditional exemption exempting NRSROs from complying with Rule 17g–5(a)(3) with respect to rating covered transactions until December 2, 2017.

### II. Background

Rule 17g–5 identifies, in paragraphs (b) and (c) of the rule, a series of conflicts of interest arising from the business of determining credit ratings.[9] Paragraph (a) of Rule 17g–5 [10] prohibits an NRSRO from issuing or maintaining a credit rating if it is subject to the conflicts of interest identified in paragraph (b) of Rule 17g–5 unless the NRSRO has taken the steps prescribed in paragraph (a)(1) (*i.e.,* disclosed the type of conflict of interest in Exhibit 6 to Form NRSRO in accordance with Section 15E(a)(1)(B)(vi) of the Exchange Act [11] and Rule 17g–1) [12] and paragraph (a)(2) (*i.e.,* established and is maintaining and enforcing written policies and procedures to address and manage conflicts of interest in accordance with Section 15E(h) of the Exchange Act).[13] Paragraph (c) of Rule 17g–5 specifically prohibits eight types of conflicts of interest. Consequently, an NRSRO is prohibited from issuing or maintaining a credit rating when it is subject to these conflicts regardless of whether it had disclosed them and established procedures reasonably designed to address them.

In November 2009, the Commission adopted paragraph (a)(3) of Rule 17g–5. This provision requires an NRSRO that is hired by an arranger to determine an initial credit rating for a structured finance product to take certain steps designed to allow an NRSRO that is not hired by the arranger to nonetheless determine an initial credit rating—and subsequently monitor that credit rating—for the structured finance product.[14] In particular, under Rule 17g–5(a)(3), an NRSRO is prohibited from issuing or maintaining a credit rating when it is subject to the conflict of interest identified in paragraph (b)(9) of Rule 17g–5 (*i.e.,* being hired by an arranger to determine a credit rating for a structured finance product) [15] unless it has taken the steps prescribed in paragraphs (a)(1) and (2) of Rule 17g–5 (discussed above) and the steps prescribed in paragraph (a)(3) of Rule 17g–5.[16] Rule 17g–5(a)(3), among other things, requires that the NRSRO must:

- Maintain on a password-protected Internet Web site a list of each structured finance product for which it currently is in the process of determining an initial credit rating in chronological order and identifying the type of structured finance product, the name of the issuer, the date the rating process was initiated, and the Internet Web site address where the arranger represents the information provided to the hired NRSRO can be accessed by other NRSROs;
- Provide free and unlimited access to such password-protected Internet Web site during the applicable calendar year to any NRSRO that provides it with a copy of the certification described in paragraph (e) of Rule 17g–5 that covers that calendar year; [17] and

[1] *See* 17 CFR 240.17g–5(a)(3).

[2] *See* Exchange Act Release No. 62120 (May 19, 2010), 75 FR 28825 (May 24, 2010) (''Order'').

[3] *See id.* at 28827–28 (setting forth conditions of relief).

[4] *See* Exchange Act Release No. 63363 (Nov. 23, 2010), 75 FR 73137 (Nov. 29, 2010) (''First Extension Order'').

[5] *See* Exchange Act Release No. 65765 (Nov. 16, 2011), 76 FR 72227 (Nov. 22, 2011) (''Second Extension Order'').

[6] *See* Exchange Act Release No. 34–68286 (Nov. 26, 2012), 77 FR 71201 (Nov. 29, 2012) (''Third Extension Order'').

[7] *See* Exchange Act Release No. 34–70919 (Nov. 22, 2013), 78 FR 70984 (Nov. 27, 2013) (''Fourth Extension Order'').

[8] *See* Exchange Act Release No. 34–73649 (Nov. 19, 2014), 79 FR 70261 (Nov. 25, 2014) (''Fifth Extension Order'').

[9] 17 CFR 240.17g–5(b) and (c).

[10] 17 CFR 240.17g–5(a).

[11] 15 U.S.C. 78o–7(a)(1)(B)(vi).

[12] 17 CFR 240.17g–1.

[13] 15 U.S.C. 78o–7(h).

[14] *See* 17 CFR 240.17g–5(a)(3); *see also* Exchange Act Release No. 61050 (Nov. 23, 2009), 74 FR 63832 (Dec. 4, 2009) (''Adopting Release'') at 63844–45.

[15] Paragraph (b)(9) of Rule 17g–5 identifies the following conflict of interest: Issuing or maintaining a credit rating for a security or money market instrument issued by an asset pool or as part of any asset-backed securities transaction that was paid for by the issuer, sponsor, or underwriter of the security or money market instrument. 17 CFR 240.17g–5(b)(9).

[16] 17 CFR 240.17g–5(a)(3).

[17] Paragraph (e) of Rule 17g–5 requires that an NRSRO seeking to access the hired NRSRO's Internet Web site during the applicable calendar year must furnish the Commission with the following certification:

The undersigned hereby certifies that it will access the Internet Web sites described in 17 CFR 240.17g–5(a)(3) solely for the purpose of determining or monitoring credit ratings. Further, the undersigned certifies that it will keep the information it accesses pursuant to 17 CFR 240.17g–5(a)(3) confidential and treat it as material nonpublic information subject to its written policies and procedures established, maintained, and enforced pursuant to section 15E(g)(1) of the Act (15 U.S.C. 78o–7(g)(1)) and 17 CFR 240.17g–4. Further, the undersigned certifies that it will determine and maintain credit ratings for at least 10% of the issued securities and money market instruments for which it accesses information pursuant to 17 CFR 240.17g–5(a)(3)(iii), if it accesses such information for 10 or more issued securities or money market instruments in the calendar year covered by the certification. Further, the undersigned certifies one of the following as applicable: (1) In the most recent calendar year during which it accessed information pursuant to 17 CFR 240.17g–5(a)(3), the undersigned accessed information for [Insert

Continued

• Obtain from the arranger a written representation that can reasonably be relied upon that the arranger will, among other things, disclose on a password-protected Internet Web site the information it provides to the hired NRSRO to determine the initial credit rating (and monitor that credit rating) and provide access to the Web site to an NRSRO that provides it with a copy of the certification described in paragraph (e) of Rule 17g–5.[18]

The Commission stated in the Adopting Release that Rule 17g–5(a)(3) is designed to address conflicts of interest and improve the quality of credit ratings for structured finance products by making it possible for more NRSROs to rate structured finance products.[19] For example, the Commission noted that when an NRSRO is hired to rate a structured finance product, some of the information it relies on to determine the rating is generally not made public.[20] As a result, structured finance products frequently are issued with ratings from only the one or two NRSROs that have been hired by the arranger, with the attendant conflict of interest that creates.[21] The Commission stated that Rule 17g–5(a)(3) was designed to increase the number of credit ratings extant for a given structured finance product and, in particular, to promote the issuance of credit ratings by NRSROs that are not hired by arrangers.[22] The Commission's goal in adopting the rule was to provide users of credit ratings with more views on the creditworthiness of structured finance products.[23] In addition, the Commission stated that Rule 17g–5(a)(3) was designed to reduce the ability of arrangers to obtain better than warranted ratings by exerting influence over NRSROs hired to determine credit ratings for structured finance products.[24] Specifically, by opening up the rating process to more NRSROs, the Commission intended to make it easier for the hired NRSRO to resist such pressure by increasing the likelihood that any steps taken to inappropriately favor the arranger could be exposed to the market through the credit ratings issued by other NRSROs.[25]

Rule 17g–5(a)(3) became effective on February 2, 2010, and the compliance date for Rule 17g–5(a)(3) was June 2, 2010.

## III. Extension of Conditional Temporary Extension

In the Order, the Commission requested comment generally, but also on a number of specific issues.[26] The Commission received six comment letters in response to this solicitation of comment.[27] The commenters expressed concern that the extraterritorial application of Rule 17g–5(a)(3) could, in the commenter's view, among other things, disrupt local securitization markets,[28] inhibit the ability of local firms to raise capital,[29] and conflict with local laws.[30] Several commenters also requested that the conditional temporary exemption be extended or made permanent.[31] The First Extension Order again solicited public comment on issues raised in connection with the extra-territorial application of Rule 17g–5(a)(3).[32] One commenter requested that the Order be made permanent, citing many of the same reasons set forth in prior comment letters.[33] The Second Extension Order again solicited public comment on issues raised in connection with the extra-territorial application of Rule 17g–5(a)(3).[34] Commenters supported the exemption regarding the extra-territorial application of the rule,[35] with one of those commenters again requesting that the Order be made permanent.[36] The Third Extension Order again solicited public comment on issues raised in connection with the extra-territorial application of Rule 17g–5(a)(3). No comments were received. The Fourth Extension Order again solicited public comment on issues raised in connection with the extra-territorial application of Rule 17g–5(a)(3). Two comments were received and the commenters supported the exemption regarding the extra-territorial application of the rule.[37] The Fifth

Number] issued securities and money market instruments through Internet Web sites described in 17 CFR 240.17g–5(a)(3) and determined and maintained credit ratings for [Insert Number] of such securities and money market instruments; or (2) The undersigned previously has not accessed information pursuant to 17 CFR 240.17g–5(a)(3) 10 or more times during the most recently ended calendar year.

[18] In particular, under paragraph (a)(3)(iii) of Rule 17g–5, the arranger must represent to the hired NRSRO that it will:

(1) Maintain the information described in paragraphs (a)(3)(iii)(C), (a)(3)(iii)(D), and (a)(3)(iii)(E) of Rule 17g–5 available at an identified password-protected Internet Web site that presents the information in a manner indicating which information currently should be relied on to determine or monitor the credit rating; (2) provide access to such password-protected Internet Web site during the applicable calendar year to any NRSRO that provides it with a copy of the certification described in paragraph (e) of Rule 17g–5 that covers that calendar year, provided that such certification indicates that the nationally recognized statistical rating organization providing the certification either: (i) Determined and maintained credit ratings for at least 10% of the issued securities and money market instruments for which it accessed information pursuant to paragraph (a)(3)(iii) of Rule 17g–5 in the calendar year prior to the year covered by the certification, if it accessed such information for 10 or more issued securities or money market instruments; or (ii) has not accessed information pursuant to paragraph (a)(3) of Rule 17g–5 10 or more times during the most recently ended calendar year; (3) post on such password-protected Internet Web site all information the arranger provides to the NRSRO, or contracts with a third party to provide to the NRSRO, for the purpose of determining the initial credit rating for the security or money market instrument, including information about the characteristics of the assets underlying or referenced by the security or money market instrument, and the legal structure of the security or money market instrument, at the same time such information is provided to the NRSRO; (4) post on such password-protected Internet Web site all information the arranger provides to the NRSRO, or contracts with a third party to provide to the NRSRO, for the purpose of undertaking credit rating surveillance on the security or money market instrument, including information about the characteristics and performance of the assets underlying or referenced by the security or money market instrument at the same time such information is provided to the NRSRO; and (5) post on such password-protected Internet Web site, promptly after receipt, any executed Form ABS Due Diligence-15E containing information about the security or money market instrument delivered by a person employed to provide third-party due diligence services with respect to the security or money market instrument.

[19] Adopting Release at 63844.

[20] *Id.*

[21] *Id.*

[22] *Id.*

[23] *Id.*

[24] *Id.*

[25] *Id.*

[26] *See* Order at 28828.

[27] Letter from Masamichi Kono, Vice Commissioner for International Affairs, Financial Services Agency, Japan, dated Nov. 12, 2010 (''Japan FSA Letter''); Letter from Masaru Ono, Executive Director, Securitization Forum of Japan, dated Nov. 12, 2010 (''SFJ Letter''); Letter from Rick Watson, Managing Director, Association for Financial Markets in Europe/European Securitisation Forum, dated Nov. 11, 2010 (''AFME Letter''); Letter from Jack Rando, Director, Capital Markets, Investment Industry Association of Canada, dated Sep. 22, 2010 (''IIAC Letter''); Letter from Christopher Dalton, Chief Executive Officer, Australian Securitisation Forum, dated Jun. 27, 2010 (''AuSF Letter''); Letter from Takefumi Emori, Managing Director, Japan Credit Rating Agency, Ltd. (''JCR''), dated Jun. 25, 2010 (''JCR Letter'').

[28] *See* Japan FSA Letter; SFJ Letter; AFME Letter; JCR Letter; AuSF Letter.

[29] *See* AFME Letter; JCR Letter; AuSF Letter.

[30] *See* Japan FSA Letter; AFME Letter; JCR Letter; AuSF Letter; IIAC Letter.

[31] *See* Japan FSA Letter; SFJ Letter; AFME Letter; JCR Letter.

[32] *See* Letter from Tom Deutsch, Executive Director, American Securitization Forum, and Chris Dalton, Chief Executive Officer, Australian Securitisation Forum, dated Aug. 9, 2011 (''ASF/AuSF Letter 1''); Letter from Jack Rando, Director, Capital Markets, Investment Industry Association of Canada, dated Nov. 2, 2011 (''IIAC Letter 2'').

[33] *See* ASF/AuSF Letter 1.

[34] Letter from Chris Barnard to the Commission, dated Nov. 23, 2011 (''Barnard Letter''); Letter from Tom Deutsch, Executive Director, American Securitization Forum, and Chris Dalton, Chief Executive Officer, Australian Securitisation Forum, dated Aug. 28, 2012 (''ASF/AuSF Letter 2'').

[35] *See* Barnard Letter; ASF/AuSF Letter 2.

[36] *See* ASF/AuSF Letter 2.

[37] *See* Letter from Chris Barnard to the Commission, dated Nov. 26, 2013; Letter from Richard Hopkin,

Managing Director, Association for Financial Markets in Europe, dated Nov. 10, 2014.

Extension Order again solicited public comment on issues raised in connection with the extra-territorial application of Rule 17g–5(a)(3). No comments were received.

Given the continued concerns about potential disruptions of local securitization markets, and because the Commission's consideration of the issues raised will benefit from additional time to engage in further dialogue with interested parties and to monitor market and regulatory developments, the Commission believes extending the conditional temporary exemption until December 2, 2017 is necessary or appropriate in the public interest, and is consistent with the protection of investors.

**IV. Request for Comment**

The Commission believes that it would be useful to continue to provide interested parties opportunity to comment. Comments may be submitted by any of the following methods:

*Electronic Comments*

- Use the Commission's Internet comment form (*http://www.sec.gov/rules/exorders.shtml*); or
- Send an email to *rule-comments@sec.gov.* Please include File Number S7–04–09 on the subject line; or
- Use the Federal eRulemaking Portal (*http://www.regulations.gov*). Follow the instructions for submitting comments.

*Paper Comments*

- Send paper comments in triplicate to Brent J. Fields, Secretary, Securities and Exchange Commission, 100 F St. NE., Washington, DC 20549–1090.

All submissions should refer to File Number S7–04–09. This file number should be included on the subject line if email is used. To help us process and review your comments more efficiently, please use only one method. The Commission will post all comments on the Commission's Internet Web site (*http://www.sec.gov/rules/exorders.shtml*). Comments are also available for Web site viewing and printing in the Commission's Public Reference Room, 100 F St. NE., Washington, DC 20549 on official business days between the hours of 10 a.m. and 3 p.m. All comments received will be posted without change; the Commission does not edit personal identifying information from submissions. You should submit only information that you wish to make available publicly.

**V. Conclusion**

For the foregoing reasons, the Commission believes it would be necessary or appropriate in the public interest and consistent with the protection of investors to extend the conditional temporary exemption exempting NRSROs from complying with Rule 17g–5(a)(3) with respect to rating covered transactions until December 2, 2017.

*Accordingly,*

*It is hereby ordered,* pursuant to Section 36 of the Exchange Act, that a nationally recognized statistical rating organization is exempt until December 2, 2017 from the requirements in Rule 17g–5(a)(3) (17 CFR 240.17g–5(a)(3)) for credit ratings where:

(1) The issuer of the security or money market instrument is not a U.S. person (as defined under Securities Act Rule 902(k)); and

(2) The nationally recognized statistical rating organization has a reasonable basis to conclude that the structured finance product will be offered and sold upon issuance, and that any arranger linked to the structured finance product will effect transactions of the structured finance product after issuance, only in transactions that occur outside the U.S.

By the Commission.

**Brent J. Fields,**

*Secretary.*

[FR Doc. 2015–26820 Filed 10–21–15; 8:45 am]

BILLING CODE 8011–01–P

---

## SECURITIES AND EXCHANGE COMMISSION

**[Release No. 34–76172; File No. SR–ISE Gemini–2015–20]**

## Self-Regulatory Organizations; ISE Gemini, LLC; Notice of Filing and Immediate Effectiveness of Proposed Rule Change To Amend the Schedule of Fees

October 16, 2015.

Pursuant to Section 19(b)(1) of the Securities Exchange Act of 1934 (the ''Act''),[1] and Rule 19b–4 thereunder,[2] notice is hereby given that on October 1, 2015, ISE Gemini, LLC (the ''Exchange'' or ''ISE Gemini'') filed with the Securities and Exchange Commission the proposed rule change, as described in Items I, II, and III below, which Items have been prepared by the self-regulatory organization. The Commission is publishing this notice to solicit comments on the proposed rule change from interested persons.

[1] 15 U.S.C. 78s(b)(1).

[2] 17 CFR 240.19b–4.

**I. Self-Regulatory Organization's Statement of the Terms of Substance of the Proposed Rule Change**

ISE Gemini proposes to amend the Schedule of Fees as described in more detail below. The text of the proposed rule change is available on the Exchange's Internet Web site at *http://www.ise.com,* at the principal office of the Exchange, and at the Commission's Public Reference Room.

**II. Self-Regulatory Organization's Statement of the Purpose of, and Statutory Basis for, the Proposed Rule Change**

In its filing with the Commission, the Exchange included statements concerning the purpose of, and basis for, the proposed rule change and discussed any comments it received on the proposed rule change. The text of these statements may be examined at the places specified in Item IV below. The self-regulatory organization has prepared summaries, set forth in Sections A, B and C below, of the most significant aspects of such statements.

*A. Self-Regulatory Organization's Statement of the Purpose of, and Statutory Basis for, the Proposed Rule Change*

1. Purpose

The Exchange proposes to amend its Schedule of Fees to increase the fees charged to subscribers of the ISE Gemini Order Feed. The Order Feed provides real-time updates to subscribers every time a new limit order that is not immediately executable at the BBO is placed on the ISE Gemini order book. The Order Feed also announces the commencement of auctions including Flash, Facilitation, Solicitation, Block Order and Price Improvement Mechanisms, as well as Directed Orders, but does not include Immediate or Cancel (''IOC'') or Fill or Kill (''FOK'') orders, quotes, or any non-displayed interest. The information included on the Order Feed includes auction type, order side (*i.e.,* buy/sell), order price, order size, and a market participant (*e.g.,* priority customer) indicator, as well as details for each instrument series, including the symbols (series and underlying security), put or call indicator, the expiration date, and the strike price of the series. The Order Feed provides each individual limit order, not including quote traffic, resulting in lower bandwidth usage and less data for subscribers to process.

Currently, the Exchange charges distributors $500 per month for subscriptions to the Order Feed and will not charge distributors a monthly fee

per controlled device as long the feed is for internal use only.[3] For subscribers that redistribute the Order Feed externally, or redistribute the Order Feed internally and externally, the Exchange charges each distributor an additional fee of $5 per month per controlled device with a combined maximum fee capped at $625 per month.

The Exchange now propose to increase the fee charged to distributors to $750 per month. The Exchange will not charge distributors a monthly fee per controlled device as long the feed is for internal use only. For subscribers that redistribute the Order Feed externally, or redistribute the Order Feed internally and externally, the Exchange is not changing distributor fee per controlled device,[4] however the Exchange proposes to increase the combined maximum fee cap to $1,000 per month. For example, a firm that subscribes to the Order Feed and then redistributes it via a controlled device to 50 clients pays $1,000 per month ($750 for the feed and $250 for the controlled devices ($5 × 50)). If that same firm redistributes the data via a controlled device to 150 clients, the fee for that firm is capped at $1,000 per month, resulting in a savings of $500.

2. Statutory Basis

The Exchange believes that its proposal is consistent with Section 6(b) of the Act,[5] in general, and furthers the objectives of Section 6(b)(4) of the Act,[6] in particular, in that it provides for an equitable allocation of reasonable fees and other charges among Exchange members and other persons using its facilities.

The Exchange believes that the proposed rule change is also consistent with Section 6(b)(8) of the Act,[7] in that it does not impose any burden on competition not necessary or appropriate in furtherance of the purposes of the Act. The proposed fees are the same for all similarly-situated market participants, and therefore do not unreasonably discriminate among market participants. Moreover, the Exchange notes that the proposed fees are lower than fees currently charged by ISE Gemini's sister exchange, the International Securities Exchange, LLC (''ISE''), which offers its own market data feeds that provide comparable information to that provided by the ISE Gemini order feeds.[8]

In adopting Regulation NMS, the Commission granted self-regulatory organizations and broker-dealers increased authority and flexibility to offer new and unique market data to the public. It was believed that this authority would expand the amount of data available to consumers, and also spur innovation and competition for the provision of market data.

The Commission concluded that Regulation NMS—by deregulating the market in proprietary data—would itself further the Act's goals of facilitating efficiency and competition:

> [E]fficiency is promoted when broker-dealers who do not need the data beyond the prices, sizes, market center identifications of the NBBO and consolidated last sale information are not required to receive (and pay for) such data. The Commission also believes that efficiency is promoted when broker-dealers may choose to receive (and pay for) additional market data based on their own internal analysis of the need for such data.[9]

By removing ''unnecessary regulatory restrictions'' on the ability of exchanges to sell their own data, Regulation NMS advanced the goals of the Act and the principles reflected in its legislative history. If the free market should determine whether proprietary data is sold to broker-dealers at all, it follows that the price at which such data is sold should be set by the market as well.

On July 21, 2010, President Barak Obama signed into law H.R. 4173, the Dodd-Frank Wall Street Reform and Consumer Protection Act of 2010 (''Dodd-Frank Act''), which amended Section 19 of the Act. Among other things, Section 916 of the Dodd-Frank Act amended paragraph (A) of Section 19(b)(3) of the Act by inserting the phrase ''on any person, whether or not the person is a member of the self-regulatory organization'' after ''due, fee or other charge imposed by the self-regulatory organization.'' As a result, all SRO rule proposals establishing or changing dues, fees, or other charges are immediately effective upon filing regardless of whether such dues, fees, or other charges are imposed on members of the SRO, non-members, or both. Section 916 further amended paragraph (C) of Section 19(b)(3) of the Act to read, in pertinent part, ''At any time within the 60-day period beginning on the date of filing of such a proposed rule change in accordance with the provisions of paragraph (1) [of Section 19(b)], the Commission summarily may temporarily suspend the change in the rules of the self-regulatory organization made thereby, if it appears to the Commission that such action is necessary or appropriate in the public interest, for the protection of investors, or otherwise in furtherance of the purposes of this title. If the Commission takes such action, the Commission shall institute proceedings under paragraph (2)(B) [of Section 19(b)] to determine whether the proposed rule should be approved or disapproved.''

The decision of the United States Court of Appeals for the District of Columbia Circuit in *NetCoalition* v. *SEC,* 615 F.3d 525 (D.C. Cir. 2010), although reviewing a Commission decision made prior to the effective date of the Dodd-Frank Act, upheld the Commission's reliance upon competitive markets to set reasonable and equitably allocated fees for market data. ''In fact, the legislative history indicates that the Congress intended that the market system ''evolve through the interplay of competitive forces as unnecessary regulatory restrictions are removed' and that the SEC wield its regulatory power 'in those situations where competition may not be sufficient,' such as in the creation of a 'consolidated transactional reporting system.' ''[10]

The court's conclusions about Congressional intent are therefore reinforced by the Dodd-Frank Act amendments, which create a presumption that exchange fees, including market data fees, may take effect immediately, without prior Commission approval, and that the Commission should take action to suspend a fee change and institute a proceeding to determine whether the fee change should be approved or disapproved only where the Commission has concerns that the change may not be consistent with the Act.

The Exchange believes that the proposed fees for the ISE Gemini market data offering is consistent with the requirements of the Act because competition provides an effective constraint on the market data fees that the Exchange has the ability and the incentive to charge. ISE Gemini has a compelling need to attract order flow from market participants in order to

[3] A distributor is any firm that receives one of the market data feeds directly from ISE Gemini or indirectly through a redistributor and then distributes it either internally or externally. A redistributor includes market data vendors and connectivity providers such as extranets and private network providers.

[4] The controlled device fee is currently $5 per device.

[5] 15 U.S.C. 78f(b).

[6] 15 U.S.C. 78f(b)(4).

[7] 15 U.S.C. 78f(b)(8).

[8] *See* ISE Schedule of Fees, Section VIII, Market Data.

[9] *See* Securities Exchange Act Release No. 51808 (June 9, 2005), 70 FR 37496 (June 29, 2005).

[10] *NetCoalition,* at 535 (quoting H.R. Rep. No. 94–229, at 92 (1975), *as reprinted in* 1975 U.S.C.C.A.N. 321, 323).

maintain its share of trading volume. This compelling need to attract order flow imposes significant pressure on the Exchange to act reasonably in setting the fees for its market data offerings, particularly given that the market participants that will pay such fees often will be the same market participants from whom the Exchange must attract order flow. These market participants include broker-dealers that control the handling of a large volume of customer and proprietary order flow. Given the portability of order flow from one exchange to another, any exchange that sought to charge unreasonably high market data fees would risk alienating many of the same customers on whose orders it depends for competitive survival. ISE Gemini currently competes with 11 other options exchanges for order flow.

The Exchange is constrained in pricing its market data offerings by the availability to market participants of alternatives to purchasing these products. The Exchange must consider the extent to which market participants would choose one or more alternatives instead of purchasing the Exchange's data.

For the reasons cited above, the Exchange believes that the proposed fees for the ISE Gemini data feed are equitable, fair, reasonable and not unreasonably discriminatory. The Exchange further believes that the continued availability of each of the ISE Gemini data feeds enhances transparency, fosters competition among orders and markets, and enables buyers and sellers to obtain better prices. In addition, the Exchange believes that no substantial countervailing basis exists to support a finding that the proposed terms and fees for these products fail to meet the requirements of the Act.

*B. Self-Regulatory Organization's Statement on Burden on Competition*

In accordance with Section 6(b)(8) of the Act,[11] the Exchange does not believe that the proposed rule change will impose any burden on intermarket or intramarket competition that is not necessary or appropriate in furtherance of the purposes of the Act. Notwithstanding its determination that the Commission may rely upon competition to establish fair and equitably allocated fees for market data, the *NetCoaltion* court found that the Commission had not, in that case, compiled a record that adequately supported its conclusion that the market for the data at issue in the case was competitive. The Exchange believes that a record may readily be established to demonstrate the competitive nature of the market in question.

For the reasons discussed above, the Exchange believes that the Dodd-Frank Act amendments to Section 19 materially alter the scope of the Commission's review of future market data filings, by creating a presumption that all fees may take effect immediately, without prior analysis by the Commission of the competitive environment. Even in the absence of this important statutory change, however, the Exchange believes that a record may readily be established to demonstrate the competitive nature of the market in question.

There is intense competition between trading platforms that provide transaction execution and routing services and proprietary data products. Transaction execution and proprietary data products are complementary in that market data is both an input and a byproduct of the execution service. In fact, market data and trade execution are a paradigmatic example of joint products with joint costs. The decision whether and on which platform to post an order will depend on the attributes of the platform where the order can be posted, including the execution fees, data quality and price and distribution of its data products. Without the prospect of a taking order seeing and reacting to a posted order on a particular platform, the posting of the order would accomplish little. Without trade executions, exchange data products cannot exist. Data products are valuable to many end users only insofar as they provide information that end users expect will assist them or their customers in making trading decisions.

The costs of producing market data include not only the costs of the data distribution infrastructure, but also the costs of designing, maintaining, and operating the exchange's transaction execution platform and the cost of regulating the exchange to ensure its fair operation and maintain investor confidence. The total return that a trading platform earns reflects the revenues it receives from both products and the joint costs it incurs. Moreover, an exchange's customers view the costs of transaction executions and of data as a unified cost of doing business with the exchange. A broker-dealer will direct orders to a particular exchange only if the expected revenues from executing trades on the exchange exceed net transaction execution costs and the cost of data that the broker-dealer chooses to buy to support its trading decisions (or those of its customers). The choice of data products is, in turn, a product of the value of the products in making profitable trading decisions. If the cost of the product exceeds its expected value, the broker-dealer will choose not to buy it.

Moreover, as a broker-dealer chooses to direct fewer orders to a particular exchange, the value of the product to that broker-dealer decrease, for two reasons. First, the product will contain less information, because executions of the broker-dealer's orders will not be reflected in it. Second, and perhaps more important, the product will be less valuable to that broker-dealer because it does not provide information about the venue to which it is directing its orders. Data from the competing venue to which the broker-dealer is directing orders will become correspondingly more valuable. Thus, a super-competitive increase in the fees charged for either transactions or data has the potential to impair revenues from both products. ''No one disputes that competition for order flow is 'fierce'.'' [12] However, the existence of fierce competition for order flow implies a high degree of price sensitivity on the part of broker-dealers with order flow, since they may readily reduce costs by directing orders toward the lowest-cost trading venues. A broker-dealer that shifted its order flow from one platform to another in response to order execution price differentials would both reduce the value of that platform's market data and reduce its own need to consume data from the disfavored platform. Similarly, if a platform increases its market data fees, the change will affect the overall cost of doing business with the platform, and affected broker-dealers will assess whether they can lower their trading costs by directing orders elsewhere and thereby lessening the need for the more expensive data.

Analyzing the cost of market data distribution in isolation from the cost of all of the inputs supporting the creation of market data will inevitably underestimate the cost of the data. Thus, because it is impossible to create data without a fast, technologically robust, and well-regulated execution system, system costs and regulatory costs affect the price of market data. It would be equally misleading, however, to attribute all of the exchange's costs to the market data portion of an exchange's joint product. Rather, all of the exchange's costs are incurred for the unified purposes of attracting order flow, executing and/or routing orders, and generating and selling data about market activity. The total return that an

[11] 15 U.S.C. 78f(b)(8).

[12] *NetCoalition,* at 24.

exchange earns reflects the revenues it receives from the joint products and the total costs of the joint products.

Competition among trading platforms can be expected to constrain the aggregate return each platform earns from the sale of its joint products, but different platforms may choose from a range of possible, and equally reasonable, pricing strategies as the means of recovering total costs. For example, some platform may choose to pay rebates to attract orders, charge relatively low prices for market information (or provide information free of charge) and charge relatively high prices for accessing posted liquidity. Other platforms may choose a strategy of paying lower rebates (or no rebates) to attract orders, setting relatively high prices for market information, and setting relatively low prices for accessing posted liquidity. In this environment, there is no economic basis for regulating maximum prices for one of the joint products in an industry in which suppliers face competitive constraints with regard to the joint offering.

The market for market data products is competitive and inherently contestable because there is fierce competition for the inputs necessary to the creation of proprietary data and strict pricing discipline for the proprietary products themselves. Numerous exchanges compete with each other for listings, trades, and market data itself, providing virtually limitless opportunities for entrepreneurs who wish to produce and distribute their own market data. This proprietary data is produced by each individual exchange, as well as other entities, in a vigorously competitive market.

Broker-dealers currently have numerous alternative venues for their order flow, including numerous self-regulatory organization (''SRO'') markets, as well as internalizing broker-dealers (''BDs'') and various forms of alternative trading systems (''ATSs''), including dark pools and electronic communication networks (''ECNs''). Each SRO market competes to produce transaction reports via trade executions, and two FINRA-regulated Trade Reporting Facilities (''TRFs'') compete to attract internalized transaction reports. Competitive markets for order flow, executions, and transaction reports provide pricing discipline for the inputs of proprietary data products. The large number of SROs, TRFs, BDs, and ATSs that currently produce proprietary data or are currently capable of producing it provides further pricing discipline for proprietary data products. Each SRO, TRF, ATS, and BD is currently permitted to produce proprietary data products, and many currently do.

Any ATS or BD can combine with any other ATS, BD, or multiple ATSs or BDs to produce joint proprietary data products. Additionally, order routers and market data vendors can facilitate single or multiple broker-dealers' production of proprietary data products. The potential sources of proprietary products are virtually limitless.

The fact that proprietary data from ATSs, BDs, and vendors can by-pass SROs is significant in two respects. First, non-SROs can compete directly with SROs for the production and sale of proprietary data products, as BATS and Arca did before registering as exchanges by publishing proprietary book data on the Internet. Second, because a single order or transaction report can appear in an SRO proprietary product, a non-SRO proprietary product, or both, the data available in proprietary products is exponentially greater than the actual number of orders and transaction reports that exist in the marketplace. Market data vendors provide another form of price discipline for proprietary data products because they control the primary means of access to end users. Vendors impose price restraints based upon their business models. For example, vendors such as Bloomberg and Reuters that assess a surcharge on data they sell may refuse to offer proprietary products that end users will not purchase in sufficient numbers. Internet portals, such as Google, impose a discipline by providing only data that will enable them to attract ''eyeballs'' that contribute to their advertising revenue. Retail broker-dealers, such as Schwab and Fidelity, offer their customers proprietary data only if it promotes trading and generates sufficient commission revenue. Although the business models may differ, these vendors' pricing discipline is the same: They can simply refuse to purchase any proprietary data product that fails to provide sufficient value. The Exchange and other producers of proprietary data products must understand and respond to these varying business models and pricing disciplines in order to market proprietary data products successfully.

*C. Self-Regulatory Organization's Statement on Comments on the Proposed Rule Change Received From Members, Participants or Others*

The Exchange has not solicited, and does not intend to solicit, comments on this proposed rule change. The Exchange has not received any unsolicited written comments from members or other interested parties.

**III. Date of Effectiveness of the Proposed Rule Change and Timing for Commission Action**

The foregoing rule change has become effective pursuant to Section 19(b)(3)(A)(ii) of the Act,[13] and subparagraph (f)(2) of Rule 19b–4 thereunder,[14] because it establishes a due, fee, or other charge imposed by ISE Gemini.

At any time within 60 days of the filing of such proposed rule change, the Commission summarily may temporarily suspend such rule change if it appears to the Commission that such action is necessary or appropriate in the public interest, for the protection of investors, or otherwise in furtherance of the purposes of the Act. If the Commission takes such action, the Commission shall institute proceedings to determine whether the proposed rule should be approved or disapproved.

**IV. Solicitation of Comments**

Interested persons are invited to submit written data, views, and arguments concerning the foregoing, including whether the proposed rule change is consistent with the Act. Comments may be submitted by any of the following methods:

*Electronic Comments*

- Use the Commission's Internet comment form (*http://www.sec.gov/rules/sro.shtml*); or
- Send an email to *rule-comments@sec.gov.* Please include File No. SR–ISE Gemini–2015–20 *on the subject line.*

*Paper Comments*

- Send paper comments in triplicate to Secretary, Securities and Exchange Commission, 100 F Street NE., Washington, DC 20549–1090.

All submissions should refer to File Number SR–ISE Gemini–2015–20. This file number should be included on the subject line if email is used. To help the Commission process and review your comments more efficiently, please use only one method. The Commission will post all comments on the Commission's Internet Web site (*http://www.sec.gov/rules/sro.shtml.*) Copies of the submission, all subsequent amendments, all written statements with respect to the proposed rule change that are filed with the Commission, and all written communications relating to the proposed rule change between the

[13] 15 U.S.C. 78s(b)(3)(A)(ii).

[14] 17 CFR 240.19b–4(f)(2).

Commission and any person, other than those that may be withheld from the public in accordance with the provisions of 5 U.S.C. 552, will be available for Web site viewing and printing in the Commission's Public Reference Room, 100 F Street NE., Washington, DC 20549 on official business days between the hours of 10:00 a.m. and 3:00 p.m. Copies of such filing also will be available for inspection and copying at the principal office of the Exchange. All comments received will be posted without change; the Commission does not edit personal identifying information from submissions. You should submit only information that you wish to make available publicly. All submissions should refer to File Number SR–ISE Gemini–2015–20 and should be submitted by November 12, 2015.

For the Commission, by the Division of Trading and Markets, pursuant to delegated authority.[15]

**Brent J. Fields,**

*Secretary.*

[FR Doc. 2015–26805 Filed 10–21–15; 8:45 am]

**BILLING CODE 8011–01–P**

## SECURITIES AND EXCHANGE COMMISSION

**[Release No. 34–76173; File No. SR–ISE–2015–32]**

## Self-Regulatory Organizations; International Securities Exchange, LLC; Notice of Filing and Immediate Effectiveness of Proposed Rule Change To Amend the Schedule of Fees

October 16, 2015.

Pursuant to Section 19(b)(1) of the Securities Exchange Act of 1934 (the ''Act''),[1] and Rule 19b–4 thereunder,[2] notice is hereby given that on October 1, 2015, the International Securities Exchange, LLC (the ''Exchange'' or ''ISE'') filed with the Securities and Exchange Commission the proposed rule change, as described in Items I, II, and III below, which Items have been prepared by the self-regulatory organization. The Commission is publishing this notice to solicit comments on the proposed rule change from interested persons.

### I. Self-Regulatory Organization's Statement of the Terms of Substance of the Proposed Rule Change

ISE proposes to amend the Schedule of Fees as described in more detail below. The text of the proposed rule change is available on the Exchange's Internet Web site at *http://www.ise.com,* at the principal office of the Exchange, and at the Commission's Public Reference Room.

### II. Self-Regulatory Organization's Statement of the Purpose of, and Statutory Basis for, the Proposed Rule Change

In its filing with the Commission, the Exchange included statements concerning the purpose of, and basis for, the proposed rule change and discussed any comments it received on the proposed rule change. The text of these statements may be examined at the places specified in Item IV below. The self-regulatory organization has prepared summaries, set forth in Sections A, B and C below, of the most significant aspects of such statements.

*A. Self-Regulatory Organization's Statement of the Purpose of, and Statutory Basis for, the Proposed Rule Change*

1. Purpose

The purpose of this proposed rule change is to amend the Schedule of Fees to modify the route-out fee applicable to Priority Customer[3] orders in Non-Select Symbols.[4] The Exchange presently charges Priority Customers route-out fees for orders routed to away markets pursuant to the Options Order Protection and Locked/Crossed Market Plan (the ''Plan''). Specifically, Priority Customer orders pay a route-out fee of $0.48 per contract in Select Symbols (including SPY),[5] and $0.48 per contract in Non-Select Symbols.

The Exchange now proposes to charge Priority Customers a route-out fee of $0.70 per contract for orders in Non-Select Symbols. The route-out fee applicable to Priority Customer orders in Select Symbols (including SPY) is not being changed.

2. Statutory Basis

The Exchange believes that the proposed rule change is consistent with the provisions of Section 6 of the Act,[6] in general, and Section 6(b)(4) of the Act,[7] in particular, in that it is designed to provide for the equitable allocation of reasonable dues, fees, and other charges among its members and other persons using its facilities.

In particular, the Exchange believes the proposed route-out fee is reasonable and equitable because it offsets costs incurred by the Exchange in connection with using unaffiliated broker-dealers to route Priority Customer orders to other exchanges for linkage executions. Furthermore, the Exchange believes that the proposed fee is not unfairly discriminatory because the route-out fee for Priority Customer orders in Non-Select Symbols, as has historically been the case, remains lower than fees for orders from other market participants, including Professional Customer and Non-Customer orders.

The Exchange believes that it is equitable and not unfairly discriminatory to charge a lower route-out fee applicable to Priority Customer orders than Professional Customer and Non-Customer orders because a Priority Customer is by definition not a broker or dealer in securities, and does not place more than 390 orders in listed options per day on average during a calendar month for its own beneficial account(s). Further, the Exchange believes that the proposed fees are not unfairly discriminatory because these fees would be uniformly applied to all Priority Customer orders. As fees to access liquidity for Priority Customer orders have risen at other exchanges, it has become necessary for the Exchange to raise routing fees in order to recoup the higher costs.

*B. Self-Regulatory Organization's Statement on Burden on Competition*

In accordance with Section 6(b)(8) of the Act,[8] the Exchange does not believe that the proposed rule change will impose any burden on intermarket or intramarket competition that is not necessary or appropriate in furtherance of the purposes of the Act as it simply increases fees for routing Priority Customer orders in Non-Select Symbols and will uniformly apply to all Priority Customer orders that are routed out to other exchanges for linkage executions. Furthermore, the fee change does not impact intra-market competition as the route out fee applies to orders routed to away markets.

The Exchange notes that members can and do route these orders to other markets or specify that ISE not route orders away on their behalf. As such, the Exchange operates in a highly competitive market in which market participants can readily direct their

[15] 17 CFR 200.30–3(a)(12).

[1] 15 U.S.C. 78s(b)(1).

[2] 17 CFR 240.19b–4.

[3] A Priority Customer is defined in ISE Rule 100(a)(37A) as a person or entity that (i) is not a broker or dealer in securities, and (ii) does not place more than 390 orders in listed options per day on average during a calendar month for its own beneficial account(s).

[4] ''Non- Select Symbols'' are options overlying all symbols excluding Select Symbols.

[5] ''Select Symbols'' are options overlying all symbols listed on ISE that are in the Penny Pilot Program.

[6] 15 U.S.C. 78f.

[7] 15 U.S.C. 78f(b)(4).

[8] 15 U.S.C. 78f(b)(8).

order flow to competing venues. In such an environment, the Exchange must continually review, and consider adjusting, its fees to remain competitive with other exchanges. For the reasons described above, the Exchange believes that the proposed fee change reflects this competitive environment.

*C. Self-Regulatory Organization's Statement on Comments on the Proposed Rule Change Received From Members, Participants or Others*

The Exchange has not solicited, and does not intend to solicit, comments on this proposed rule change. The Exchange has not received any unsolicited written comments from members or other interested parties.

**III. Date of Effectiveness of the Proposed Rule Change and Timing for Commission Action**

The foregoing rule change has become effective pursuant to Section 19(b)(3)(A)(ii) of the Act,[9] and subparagraph (f)(2) of Rule 19b–4 thereunder,[10] because it establishes a due, fee, or other charge imposed by ISE.

At any time within 60 days of the filing of such proposed rule change, the Commission summarily may temporarily suspend such rule change if it appears to the Commission that such action is necessary or appropriate in the public interest, for the protection of investors, or otherwise in furtherance of the purposes of the Act. If the Commission takes such action, the Commission shall institute proceedings to determine whether the proposed rule should be approved or disapproved.

**IV. Solicitation of Comments**

Interested persons are invited to submit written data, views, and arguments concerning the foregoing, including whether the proposed rule change is consistent with the Act. Comments may be submitted by any of the following methods:

*Electronic Comments*

- Use the Commission's Internet comment form (*http://www.sec.gov/rules/sro.shtml*); or
- Send an email to *rule-comments@sec.gov.* Please include File No. SR–ISE–2015–32 on the subject line.

*Paper Comments*

- Send paper comments in triplicate to Secretary, Securities and Exchange Commission, 100 F Street NE., Washington, DC 20549–1090.

All submissions should refer to File Number SR–ISE–2015–32. This file number should be included on the subject line if email is used. To help the Commission process and review your comments more efficiently, please use only one method. The Commission will post all comments on the Commission's Internet Web site (*http://www.sec.gov/rules/sro.shtml).* Copies of the submission, all subsequent amendments, all written statements with respect to the proposed rule change that are filed with the Commission, and all written communications relating to the proposed rule change between the Commission and any person, other than those that may be withheld from the public in accordance with the provisions of 5 U.S.C. 552, will be available for Web site viewing and printing in the Commission's Public Reference Room, 100 F Street NE., Washington, DC 20549 on official business days between the hours of 10:00 a.m. and 3:00 p.m. Copies of such filing also will be available for inspection and copying at the principal office of the Exchange. All comments received will be posted without change; the Commission does not edit personal identifying information from submissions. You should submit only information that you wish to make available publicly. All submissions should refer to File Number SR–ISE–2015–32 and should be submitted by November 12, 2015.

For the Commission, by the Division of Trading and Markets, pursuant to delegated authority.[11]

**Brent J. Fields,**

*Secretary.*

[FR Doc. 2015–26806 Filed 10–21–15; 8:45 am]

**BILLING CODE 8011–01–P**

[9] 15 U.S.C. 78s(b)(3)(A)(ii).

[10] 17 CFR 240.19b–4(f)(2).

[11] 17 CFR 200.30–3(a)(12).

## SECURITIES AND EXCHANGE COMMISSION

### Sunshine Act Meeting

Notice is hereby given, pursuant to the provisions of the Government in the Sunshine Act, Public Law 94–409, that the Securities and Exchange Commission will hold an Open Meeting on Monday, October 26, 2015, at 1:00 p.m., in the Auditorium (L–002) at the Commission's headquarters building, to hear oral argument in an appeal from an initial decision of an administrative law judge by Respondents ZPR Investment Management, Inc. (''ZPRIM''), and Max E. Zavanelli (''Zavanelli'').

On May 27, 2014, the law judge found that ZPRIM violated Sections 206(1), (2), and (4) of the Investment Advisers Act of 1940 and Advisers Act Rule 206(4)–1(a)(5), by misrepresenting compliance with the Global Investment Performance Standards (''GIPS'') in magazine advertisements and investment report newsletters. The initial decision also found that Zavanelli aided, abetted, and caused, and was primarily liable under Sections 206(1) and (2) for, each of ZPRIM's violations based on these misrepresentations.

In addition, the law judge found that ZPRIM violated Sections 206(2) and (4) and Rule 206(4)–1(a)(5) by negligently claiming in a Morningstar report for the period ended September 30, 2010 that (a) an independent third party had verified ZPRIM's compliance with GIPS ''to the present,'' and (b) ZPRIM was not under Commission investigation, although neither of these things was true. The law judge also found that ZPRIM violated Sections 206(1), (2), and (4) and Rule 206(4)–1(a)(5) by repeating its false claim that it was not under Commission investigation in a Morningstar report for the period ended March 31, 2011. The initial decision found that Zavanelli caused each of ZPRIM's Morningstar violations but did not aid and abet them.

For these violations, the law judge barred Zavanelli from association with any investment adviser, broker, dealer, municipal securities dealer, municipal advisor, transfer agent, or nationally recognized statistical rating organization; ordered ZPRIM to cease and desist from committing, and Zavanelli to cease and desist from committing, aiding, abetting, or causing the commission of, any violations or future violations of Advisers Act Sections 206(1), (2), and (4) and Rule 206(4)–1(a)(5); and imposed civil money penalties of $250,000 on ZPRIM and $660,000 on Zavanelli.

Respondents appealed the initial decision's findings of violation and the sanctions imposed. The issues likely to be considered at oral argument include, among other things, whether Respondents violated the antifraud provisions as alleged and, if so, what sanction, if any, is appropriate in the public interest.

For further information, please contact the Office of the Secretary at (202) 551–5400.

Dated: October 19, 2015.

**Brent J. Fields,**

*Secretary.*

[FR Doc. 2015–26972 Filed 10–20–15; 11:15 am]

**BILLING CODE 8011–01–P**

## SECURITIES AND EXCHANGE COMMISSION

**[Release No. 34–76176; File No. SR–FINRA–2015–026]**

## Self-Regulatory Organizations; Financial Industry Regulatory Authority, Inc.; Notice of Amendment No. 1 and Order Granting Accelerated Approval to a Proposed Rule Change, as Modified by Amendment No. 1, To Require an Indicator When a TRACE Report Does Not Reflect a Commission or Mark-up/Mark-down

October 16, 2015.

### I. Introduction

On July 20, 2015, Financial Industry Regulatory Authority, Inc. (''FINRA'') filed with the Securities and Exchange Commission (''Commission''), pursuant to Section 19(b)(1) of the Securities Exchange Act of 1934 (''Act'') [1] and Rule 19b–4 thereunder,[2] a proposed rule change to amend FINRA Rule 6730, which governs the reporting of eligible transactions to its Trade Reporting and Compliance Engine (''TRACE''). The proposed rule change was published for comment in the **Federal Register** on August 7, 2015.[3] The Commission received two comment letters on the proposed rule change.[4] On September 10, 2015, the Commission extended the time to act on the proposal until November 5, 2015.[5] On October 6, 2015, FINRA filed Amendment No. 1 to the proposed rule change.[6] The Commission is publishing this Notice and Order to solicit comment on Amendment No. 1 and to approve the proposed rule change, as modified by Amendment No. 1, on an accelerated basis.

### II. Description of the Proposal

FINRA Rule 6730 (Transaction Reporting) sets forth the requirements applicable to members reporting transactions in TRACE-Eligible Securities,[7] and provides the specific items of information that must be included in a TRACE trade report. Rules 6730(c) and (d) require a member firm to report the commission (total dollar amount) separately on the TRACE trade report for an agency transaction. FINRA combines the dollar amount that is reported as the commission with the amount that is reported in the price field, and disseminates to the market this aggregate amount as the transaction's price. For a principal transaction, Rule 6730(d)(1) provides that a firm must report a price that includes the mark-up/mark-down, and FINRA disseminates this price to the market. FINRA notes that the goal of these reporting requirements is to provide investors and market participants with pricing information that better reflects comparable prices for principal and agency trades in a TRACE-Eligible Security.

FINRA believes that the pricing information currently being disseminated might be incomplete and in some cases misleading, given that disseminated prices on transactions that do not include remuneration are not distinguished from transactions that do include a commission or mark-up/mark-down. This proposal is designed to provide more meaningful pricing transparency through TRACE by identifying any transaction where a commission or mark-up/mark-down was not charged or known at the time of TRACE reporting.

The proposal amends Rule 6730 to require a member firm to identify any transactions for which a commission or mark-up/mark-down is not reflected in the TRACE trade report because the firm does not charge, or does not know the amount of, the commission or mark-up/mark-down at the time of TRACE reporting. For example, a firm might assess a charge that is not transaction-based, as in the case of a ''fee-based account'' where remuneration is based upon assets under management (and individual commissions or mark-ups/mark-downs are not charged).[8] Thus, for such transactions, the price is not inclusive of a commission or mark-up/mark-down. In another case, a firm might charge a commission or mark-up/mark-down, but might not know the exact amount of that commission or mark-up/mark-down at the time that the TRACE transaction report is required to be submitted because of their remuneration structure (*e.g.,* a firm might not calculate a mark-up for a transaction on a trade-by-trade basis, but could nonetheless ultimately assess transaction remuneration pursuant to a monthly volume-based schedule).[9] The proposal requires a firm to identify all such trades for which the firm does not charge or does not know the amount of the commission or mark-up/market-down at the time of TRACE reporting. In addition, if a firm does not charge any remuneration associated with the trade (in any form), it would be required to identify the trade as one for which no remuneration was assessed to the transaction. FINRA will flag these disseminated transactions as not being inclusive of remuneration. Based on current rules, the disseminated TRACE feed will not explicitly distinguish between agency and principal transactions, and the ''no remuneration'' flag will apply to both principal and agency transactions.

FINRA believes that, in addition to improving transparency for disseminated prices, this proposal will enhance its regulatory audit trail and surveillance patterns. With this additional level of detail, surveillance patterns should yield fewer false positives regarding mark-up and best execution surveillance, reduce regulatory inquiries, and provide greater focus for FINRA's regulatory efforts. FINRA has represented, for example, that without the ''no remuneration'' designation FINRA's surveillance patterns for best execution might generate alerts for transactions whose prices reflect a commission or a mark-up as being outliers compared to transactions whose prices do not reflect a charge.[10]

FINRA plans to implement the proposal on May 23, 2016.

### III. Summary of Comments and Amendment No. 1

As noted above, the Commission received two comment letters on the

[1] 15 U.S.C. 78s(b)(1).

[2] 17 CFR 240.19b–4.

[3] *See* Securities Exchange Act Release No. 75588 (August 3, 2015), 80 FR 47546 (August 7, 2015) (''Notice'').

[4] *See* letter from Sean Davy, Managing Director, SIFMA, to Elizabeth M. Murphy, Secretary, Commission, dated August 27, 2015 (''SIFMA Letter''); letter from Michael Nicholas, Chief Executive Officer, Bond Dealers of America, to Secretary, Commission, dated August 28, 2015 (''BDA Letter'').

[5] *See* Securities Exchange Act Release No. 75875, 80 FR 55671 (September 16, 2015).

[6] Amendment No. 1 revised the proposal to include three exceptions to the requirement that members append the ''no remuneration'' indicator to trade reports that do not reflect either a commission or mark-up/mark-down, for: (i) List or Fixed Offering Price Transactions, (ii) Takedown Transactions, and (iii) inter-dealer transactions. Amendment No. 1 is available in the public comment file for SR–FINRA–2015–026 on the Commission's Web site.

[7] See FINRA Rule 6710 (defining ''TRACE-Eligible Security''). Most transactions reported to TRACE are publicly disseminated immediately upon receipt of a transaction report.

[8] Another example of a fee structure that is not transaction-based is where an alternative trading system (''ATS'') charges subscribers a fixed fee for unlimited trading each month. *See* Notice, 80 FR at 47547.

[9] FINRA states that, as a practical matter, firms have difficulty complying with the current TRACE rules for these types of volume-based mark-up/mark-down arrangements, since they are unable to report accurately all the required information related to the transaction on a timely basis and would need to submit a cancel and replace to update the pricing information. In some cases, this information might not be known until the end of the month. *See id.*

[10] *See* Notice, 80 FR at 47548.

proposal.[11] The SIFMA Letter generally supports the proposal. However, SIFMA believes that the requirement to report trades involving no remuneration should be limited to customer trades and should not apply to dealer-to-dealer trades, consistent with SR–MSRB–2015–02.[12] The BDA Letter also supports the proposal but recommends that the proposed reporting requirement extend only to customer trades, consistent with MSRB Rule G–14.[13] The BDA Letter expresses concern with how the proposed requirement would affect smaller introducing dealers and dealers already having difficulty with trade reporting deadlines under current rules, particularly if the requirement applies to inter-dealer transactions.

In response to commenters' concerns, FINRA proposed in Amendment No. 1 to provide an exception to the proposed ''no remuneration'' requirement for inter-dealer transactions. FINRA notes that this change would further align the proposal with the comparable MSRB rule, as requested by the commenters.[14] FINRA believes that, given that inter-dealer transactions typically do not involve remuneration, excluding such transactions from the requirement better focuses the use of the indicator on the types of transactions that would provide the additional price transparency sought by the proposal, which are transactions between dealers and customers.

Also in Amendment No. 1, FINRA proposed to add exceptions from the ''no remuneration'' indicator requirement for List or Fixed Offering Price Transactions, as defined in FINRA Rule 6710(q), and Takedown Transactions, as defined in FINRA Rule 6710(r). These transactions are not currently subject to dissemination; FINRA believes, therefore, that applying the ''no remuneration'' indicator to these transactions would not provide additional transparency to the market.

## IV. Discussion and Commission Findings

After careful review of the proposal and comments submitted, the Commission finds that the proposal, as modified by Amendment No. 1, is consistent with the requirements of the Act and the rules and regulations thereunder applicable to a national securities association.[15] In particular, the Commission finds that the proposed rule change is consistent with Section 15A(b)(6) of the Act,[16] which requires, among other things, that FINRA's rules be designed to prevent fraudulent and manipulative acts and practices, to promote just and equitable principles of trade, and, in general, to protect investors and the public interest. The Commission also finds the proposal consistent with Section 15A(b)(9) of the Act,[17] which requires that FINRA's rules not impose any burden on competition that is not necessary or appropriate in furtherance of the purposes of the Act. The Commission notes that it previously has approved a similar proposed rule change of the MSRB.[18]

The Commission believes that the proposed rule change is reasonably designed to improve transparency of disseminated TRACE trade reports by requiring firms to indicate when the trade report does not include a commission or mark-up/mark-down. Use of a ''no remuneration'' indicator will make investors better able to assess disseminated transaction prices. Finally, the Commission believes that it is reasonable and consistent with the Act for FINRA to provide exceptions to this requirement for inter-dealer transactions, which do not typically have remuneration, and for List or Fixed Offering Price and Takedown Transactions, for which there currently is no TRACE dissemination of the transaction information.

Therefore, the Commission finds that the proposed rule change, as modified by Amendment No. 1, is consistent with the Act.

## V. Accelerated Approval of Proposal, as Modified by Amendment No. 1

The Commission finds good cause, pursuant to Section 19(b)(2) of the Exchange Act[19] for approving the proposal, as modified by Amendment No. 1, prior to the 30th day after publication of Amendment No. 1 in the **Federal Register**.

Amendment No. 1 revised the proposal to include limited exceptions to the proposed ''no remuneration'' indicator requirement. The Commission believes that Amendment No. 1 does not raise any novel regulatory issues because these exceptions are measured and do not appear to impose any undue burdens on affected persons.

Accordingly, the Commission finds that good cause exists to approve the proposal, as modified by Amendment No. 1, on an accelerated basis.

## VI. Solicitation of Comments

Interested persons are invited to submit written data, views, and arguments concerning the foregoing, including whether Amendment No. 1 to the proposed rule change is consistent with the Act. Comments may be submitted by any of the following methods:

*Electronic Comments*

- Use the Commission's Internet comment form (*http://www.sec.gov/rules/sro.shtml*); or
- Send an email to *rule-comments@sec.gov*. Please include File Number SR–FINRA–2015–026 on the subject line.

*Paper Comments*

- Send paper comments in triplicate to Brent J. Fields, Secretary, Securities and Exchange Commission, 100 F Street NE., Washington, DC 20549–1090.

All submissions should refer to File Number SR–FINRA–2015–026. This file number should be included on the subject line if email is used. To help the Commission process and review your comments more efficiently, please use only one method. The Commission will post all comments on the Commission's Internet Web site (*http://www.sec.gov/rules/sro.shtml*). Copies of the submission, all subsequent amendments, all written statements with respect to the proposed rule change that are filed with the Commission, and all written communications relating to the proposed rule change between the Commission and any person, other than those that may be withheld from the public in accordance with the provisions of 5 U.S.C. 552, will be available for Web site viewing and printing in the Commission's Public Reference Room, 100 F Street NE., Washington, DC 20549 on official business days between the hours of 10:00 a.m. and 3:00 p.m. Copies of such filing also will be available for inspection and copying at the principal offices of FINRA. All comments received will be posted without change; the Commission does not edit personal identifying information from submissions. You should submit only information that you wish to make available publicly. All submissions

[11] *See supra* note 4.

[12] *See* SIFMA Letter at 1. *See also* Securities Exchange Act Release No. 75039 (May 22, 2015), 80 FR 31084 (June 1, 2015) (SR–MSRB–2015–02) (approving an MSRB proposal to, among other things, require dealers to include a new indicator on their trade reports that would be disseminated publicly to distinguish customer transactions that do not include a dealer compensation component and those that include a markup, mark-down, or a commission) (''MSRB Order'').

[13] *See* BDA Letter at 1.

[14] The MSRB's rule limits the use of its ''non-transaction-based compensation arrangement indicator'' to transactions with customers. *See* MSRB Order, 80 FR at 31085.

[15] In approving this proposed rule change, the Commission has considered the proposed rule's impact on efficiency, competition, and capital formation. *See* 15 U.S.C. 78c(f).

[16] 15 U.S.C. 78o–3(b)(6).

[17] 15 U.S.C. 78o–3(b)(9).

[18] *See* MSRB Order, 80 FR at 31086–87.

[19] *See* 15 U.S.C. 78s(b)(2).

should refer to File Number SR–FINRA–2015–026, and should be submitted on or before November 12, 2015.

## VII. Conclusion

*It is therefore ordered,* pursuant to Section 19(b)(2) of the Act,[20] that the proposed rule change (SR–FINRA–2015–026), as modified by Amendment No. 1, be, and hereby is, approved on an accelerated basis.

For the Commission, by the Division of Trading and Markets, pursuant to delegated authority.[21]

**Brent J. Fields,**

*Secretary.*

[FR Doc. 2015–26808 Filed 10–21–15; 8:45 am]

**BILLING CODE 8011–01–P**

[20] 15 U.S.C. 78s(b)(2).

[21] 17 CFR 200.30–3(a)(12).

---

## SECURITIES AND EXCHANGE COMMISSION

**[Release No. 34–76177; File No. SR–ISE–2015–31]**

## Self-Regulatory Organizations; International Securities Exchange, LLC; Notice of Filing and Immediate Effectiveness of Proposed Rule Change To Amend the Schedule of Fees

October 16, 2015.

Pursuant to Section 19(b)(1) of the Securities Exchange Act of 1934 (the ''Act''),[1] and Rule 19b–4 thereunder,[2] notice is hereby given that on October 1, 2015, the International Securities Exchange, LLC (the ''Exchange'' or the ''ISE'') filed with the Securities and Exchange Commission (''Commission'') the proposed rule change, as described in Items I, II, and III below, which Items have been prepared by the self-regulatory organization. The Commission is publishing this notice to solicit comments on the proposed rule change from interested persons.

### I. Self-Regulatory Organization's Statement of the Terms of Substance of the Proposed Rule Change

The ISE proposes to amend language in the Schedule of Fees related to excluding days from its average daily volume calculations when the market is not open for the entire trading day. The text of the proposed rule change is available on the Exchange's Web site (*http://www.ise.com*), at the principal office of the Exchange, and at the Commission's Public Reference Room.

[1] 15 U.S.C.78s(b)(1)

[2] 17 CFR 240.19b–4.

### II. Self-Regulatory Organization's Statement of the Purpose of, and Statutory Basis for, the Proposed Rule Change

In its filing with the Commission, the self-regulatory organization included statements concerning the purpose of, and basis for, the proposed rule change and discussed any comments it received on the proposed rule change. The text of these statements may be examined at the places specified in Item IV below. The self-regulatory organization has prepared summaries, set forth in sections A, B and C below, of the most significant aspects of such statements.

*A. Self-Regulatory Organization's Statement of the Purpose of, and Statutory Basis for, the Proposed Rule Change*

1. Purpose

Currently, for purposes of determining a member's average daily volume (''ADV''), any day that the regular or complex order books are not open for the entire trading day may be excluded from such calculation. The Exchange proposes to amend language in the Schedule of Fees related to excluding days from the ADV calculations used to determine applicable fee and rebate tiers. Specifically, the Exchange proposes to permit days to be excluded from its ADV calculations where the Exchange is technically open for the entire trading day, but has instructed members to route away due to a systems or other error that ultimately does not impact trading on the Exchange. Currently, the Exchange's ability to remove days from its ADV calculations is limited to days where the market is not open for the entire trading day. This allows the Exchange to exclude days, for example, where the Exchange declares a trading halt in all securities, honors a market-wide trading halt declared by another market, or closes early for holiday observance. Because these days generally have artificially lower trading volume, the Exchange believes that it is reasonable and equitable to not include such days in determining fee and rebate tiers. The Exchange notes, however, that if it has a systems issue in the morning before the market opens, it may instruct members to route away to other markets. If the systems issue continues into trading hours, the Exchange is permitted to exclude the day for all members that would have a lower ADV with the day included. If, however, the systems issue is resolved prior to the opening of trading, the Exchange is not permitted to exclude the day from its ADV calculations. This is the case regardless of the fact that many members would have already made arrangements to route away in accordance with the Exchange's instructions. To prevent this undesirable result, and preserve the Exchange's intent behind adopting volume-based pricing, the Exchange proposes to allow days to be excluded from its ADV calculation whenever all members are instructed, in writing, to route their orders to other markets.

2. Statutory Basis

The Exchange believes that the proposed rule change is consistent with the provisions of Section 6 of the Act,[3] in general, and Section 6(b)(4) of the Act,[4] in particular, in that it is designed to provide for the equitable allocation of reasonable dues, fees, and other charges among its members and other persons using its facilities. The Exchange believes that it is reasonable and equitable to exclude a day from its ADV calculations when members are instructed to route their orders to other markets as this preserves the Exchange's intent behind adopting volume-based pricing, and avoids penalizing members that follow this instruction. Without this change, members that route away in accordance with the Exchange's instructions may be negatively impacted, resulting in an effective cost increase for those members. The Exchange further believes that the proposed rule change is not unfairly discriminatory because it applies equally to all members and ADV calculations. As is the Exchange's current practice, the Exchange will inform members of any day to be excluded from its ADV calculations by sending members a notice and posting such notice on the Exchange's Web site.

*B. Self-Regulatory Organization's Statement on Burden on Competition*

In accordance with Section 6(b)(8) of the Act,[5] the Exchange does not believe that the proposed rule change will impose any burden on intermarket or intramarket competition that is not necessary or appropriate in furtherance of the purposes of the Act. The Exchange believes that the proposed modifications to its ADV calculation are pro-competitive and will result in lower total costs to end users, a positive outcome of competitive markets. The Exchange operates in a highly competitive market in which market participants can readily direct their order flow to competing venues. In such an environment, the Exchange must

[3] 15 U.S.C. 78f.

[4] 15 U.S.C. 78f(b)(4).

[5] 15 U.S.C. 78f(b)(8).

continually review, and consider adjusting, its fees and rebates to remain competitive with other exchanges. For the reasons described above, the Exchange believes that the proposed fee changes reflect this competitive environment.

*C. Self-Regulatory Organization's Statement on Comments on the Proposed Rule Change Received From Members, Participants, or Others*

The Exchange has not solicited, and does not intend to solicit, comments on this proposed rule change. The Exchange has not received any unsolicited written comments from members or other interested parties.

**III. Date of Effectiveness of the Proposed Rule Change and Timing for Commission Action**

The foregoing rule change has become effective pursuant to Section 19(b)(3)(A)(ii) of the Act [6] and subparagraph (f)(2) of Rule 19b–4 thereunder,[7] because it establishes a due, fee, or other charge imposed by ISE.

At any time within 60 days of the filing of such proposed rule change, the Commission summarily may temporarily suspend such rule change if it appears to the Commission that such action is necessary or appropriate in the public interest, for the protection of investors, or otherwise in furtherance of the purposes of the Act. If the Commission takes such action, the Commission shall institute proceedings to determine whether the proposed rule should be approved or disapproved.

**IV. Solicitation of Comments**

Interested persons are invited to submit written data, views, and arguments concerning the foregoing, including whether the proposed rule change is consistent with the Act. Comments may be submitted by any of the following methods:

*Electronic Comments*

- Use the Commission's Internet comment form (*http://www.sec.gov/rules/sro.shtml*); or
- Send an email to *rule-comments@sec.gov.* Please include File Number SR–ISE–2015–31 on the subject line.

*Paper Comments*

- Send paper comments in triplicate to Brent J. Fields, Secretary, Securities and Exchange Commission, 100 F Street NE., Washington, DC 20549–1090.

All submissions should refer to File Number SR–ISE–2015–31. This file number should be included on the subject line if email is used. To help the Commission process and review your comments more efficiently, please use only one method. The Commission will post all comments on the Commission's Internet Web site (*http://www.sec.gov/rules/sro.shtml*). Copies of the submission, all subsequent amendments, all written statements with respect to the proposed rule change that are filed with the Commission, and all written communications relating to the proposed rule change between the Commission and any person, other than those that may be withheld from the public in accordance with the provisions of 5 U.S.C. 552, will be available for Web site viewing and printing in the Commission's Public Reference Room, 100 F Street NE., Washington, DC 20549 on official business days between the hours of 10:00 a.m. and 3:00 p.m. Copies of such filing also will be available for inspection and copying at the principal office of the Exchange. All comments received will be posted without change; the Commission does not edit personal identifying information from submissions. You should submit only information that you wish to make available publicly. All submissions should refer to File Number SR–ISE–2015–31, and should be submitted on or before November 12, 2015.

For the Commission, by the Division of Trading and Markets, pursuant to delegated authority.[8]

**Brent J. Fields,**

*Secretary.*

[FR Doc. 2015–26809 Filed 10–21–15; 8:45 am]

**BILLING CODE 8011–01–P**

[6] 15 U.S.C. 78s(b)(3)(A)(ii).

[7] 17 CFR 240.19b–4(f)(2).

[8] 17 CFR 200.30–3(a)(12).

---

## SECURITIES AND EXCHANGE COMMISSION

**[Release No. 34–76181; File No. SR–ISE–2015–33]**

## Self-Regulatory Organizations; International Securities Exchange, LLC; Notice of Filing and Immediate Effectiveness of Proposed Rule Change To Amend the Schedule of Fees

October 16, 2015.

Pursuant to Section 19(b)(1) of the Securities Exchange Act of 1934 (the ''Act''),[1] and Rule 19b–4 thereunder,[2] notice is hereby given that on October 1, 2015, the International Securities Exchange, LLC (the ''Exchange'' or ''ISE'') filed with the Securities and Exchange Commission the proposed rule change, as described in Items I, II, and III below, which items have been prepared by the self-regulatory organization. The Commission is publishing this notice to solicit comments on the proposed rule change from interested persons.

**I. Self-Regulatory Organization's Statement of the Terms of Substance of the Proposed Rule Change**

ISE proposes to amend the Schedule of Fees as described in more detail below. The text of the proposed rule change is available on the Exchange's Internet Web site at *http://www.ise.com,* at the principal office of the Exchange, and at the Commission's Public Reference Room.

**II. Self-Regulatory Organization's Statement of the Purpose of, and Statutory Basis for, the Proposed Rule Change**

In its filing with the Commission, the Exchange included statements concerning the purpose of, and basis for, the proposed rule change and discussed any comments it received on the proposed rule change. The text of these statements may be examined at the places specified in Item IV below. The self-regulatory organization has prepared summaries, set forth in Sections A, B and C below, of the most significant aspects of such statements.

*A. Self-Regulatory Organization's Statement of the Purpose of, and Statutory Basis for, the Proposed Rule Change*

1. Purpose

The Exchange proposes to amend its Schedule of Fees to increase the fees charged to subscribers of the ISE Order Feed and to standardize the managed data fees charged for the ISE Order Feed, ISE Top Quote Feed, and ISE Spread Feed [3] with a modest increase to the fees charged.

Order Feed

The Order Feed provides real-time updates to subscribers every time a new limit order that is not immediately executable at the BBO is placed on the ISE order book. The Order Feed also announces the commencement of

[1] 15 U.S.C. 78s(b)(1).

[2] 17 CFR 240.19b–4.

[3] With the exception that the ISE Spread Feed will continue to be subject to a higher controlled device fee than the ISE Order Feed and ISE Top Quote Feed. Additionally, nothing in this rule filing affects subscription fee discounts offered to members who subscribe to two data feeds (10%) or three data feeds (20%).

auctions including Flash, Facilitation, Solicitation, Block Order and Price Improvement Mechanisms, as well as Directed Orders, but does not include Immediate or Cancel (''IOC'') or Fill or Kill (''FOK'') orders, quotes, or any non-displayed interest. The information included on the Order Feed includes auction type, order side (*i.e.,* buy/sell), order price, order size, and a market participant (*e.g.,* priority customer) indicator, as well as details for each instrument series, including the symbols (series and underlying security), put or call indicator, the expiration date, and the strike price of the series. The Order Feed provides each individual limit order, not including quote traffic, resulting in lower bandwidth usage and less data for subscribers to process.

Currently, the Exchange charges distributors $2,000 per month for subscriptions to the Order Feed and will not charge distributors a monthly fee per controlled device as long the feed is for internal use only.[4] For subscribers that redistribute the Order Feed externally, or redistribute the Order Feed internally and externally, the Exchange charges each distributor an additional fee of $10 per month per controlled device with a combined maximum fee capped at $2,500 per month.

We now propose to increase the fee charged to distributors to $3,000 per month. The Exchange will not charge distributors a monthly fee per controlled device as long the feed is for internal use only. For subscribers that redistribute the Order Feed externally, or redistribute the Order Feed internally and externally, the Exchange proposes to charge each distributor an additional fee of $20 per month per controlled device with a combined maximum fee capped at $5,000 per month. For example, a firm that subscribes to the Order Feed and then redistributes it via a controlled device to 50 clients pays $4,000 per month ($3,000 for the feed and $1,000 for the controlled devices ($20 × 50)). If that same firm redistributes the data via a controlled device to 150 clients, the fee for that firm is capped at $5,000 per month, resulting in a savings of $1,000.

Managed Data Fees

On June 6, 2013 ISE implemented a temporary Managed Data Access Service program that established a new pricing and distribution model for the sale of a number of real-time market data products.[5] The Exchange recently extended this program until August 31, 2016, so that the Exchange could continue to provide this alternative delivery option for ISE data feeds.[6]

Managed Data Access Service is a pricing and administrative option whereby the ISE assesses fees to Managed Data Access Distributors,[7] who redistribute market data to Managed Data Access Recipients.[8] Managed Data Access Distributors are required to monitor the delivery of the data retransmitted to their clients, and must agree to reformat, redisplay and/or alter the data feeds prior to retransmission without affecting the integrity of the data feeds and without rendering any of the feeds inaccurate, unfair, uninformative, fictitious, misleading, or discriminatory.

Currently, the Exchange charges a fee to each Managed Data Access Distributor of $1,500 for each of the Top Quote Feed and the Spread Feed, and $1,000 per month for the Order Feed. The Exchange also charges a fee for each IP address at Managed Data Access Recipients that receive market data redistributed by a Managed Data Access Distributor, which is $500 per month for each of the Top Quote Feed and the Spread Feed, and $350 per month for the Order Feed.[9] In addition, the Exchange charges a controlled device fee for each controlled device permitted to access market data redistributed by a Managed Data Access Distributor to a Market Data Access Recipient that is a Professional user,[10] which is $20 per month for the Top Quote Feed, $25 per month for the Spread Feed, and $10 per month for the Order Feed.[11] For each of the above ISE data feeds, Market Data Access Distributors are subject to a minimum fee, which is $3,000 per month for each of the Top Quote Feed and the Spread Feed, and $2,000 per month for the Order Feed.

The Exchange now proposes to charge each Managed Data Access Distributor a monthly fee of $2,000 for the Order Feed, Top Quote Feed, and Spread Feed. The Exchange also proposes to charge each IP address at Managed Data Access Recipients that received market data redistributed by a Managed Data Access Distributor a monthly fee of $500 for the Order Feed.[12] In addition, for each controlled device permitted to access market data redistributed by a Managed Data Access Distributor to a Market Data Access Recipient that is a Professional user the Exchange proposes a fee of $20 per month for the Order Feed.[13] Finally, for the Order Feed, Top Quote Feed, and Spread Feed, Market Data Access Distributors are subject to a minimum fee, which the Exchange now proposes to change to $4,000 per month.

2. Statutory Basis

The Exchange believes that its proposal is consistent with Section 6(b) of the Act,[14] in general, and furthers the objectives of Section 6(b)(4) of the Act,[15] in particular, in that it provides for an equitable allocation of reasonable fees and other charges among Exchange Members and other persons using its facilities.

The Exchange believes that the proposed rule change is also consistent with Section 6(b)(8) of the Act,[16] in that it does not impose any burden on competition not necessary or appropriate in furtherance of the purposes of the Act. The proposed fees are the same for all similarly-situated market participants, and therefore do not unreasonably discriminate among market participants. Moreover, the Exchange notes that the proposed fees are similar to the fees charged by other exchanges. For example, similar to the ISE Order Feed, NASDAQ OMX PHLX (''PHLX'') charges a monthly fee of $3,000 for internal distributors and $3,500 for external distributors plus a monthly fee of $1 for non-professional subscribers and $40 for professional

[4] A distributor is any firm that receives one of the market data feeds directly from ISE or indirectly through a redistributor and then distributes it either internally or externally. A redistributor includes market data vendors and connectivity providers such as extranets and private network providers.

[5] *See* Exchange Act Release No. 69806 (June 20, 2013), 78 FR 38424 (June 26, 2013), SR–ISE–2013–39.

[6] *See* Exchange Act Release No. 34–75874 (September 10, 2015), 80 FR 55669 (September 16, 2015), SR–ISE–2015–25.

[7] A Managed Data Access Distributor redistributes ISE data feeds and permits access to the information in those data feeds through a controlled device. A Managed Data Access Distributor can also redistribute a data feed solution to specific IP addresses, including an Application Programming Interface (''API'') or similar automated delivery solutions, with only limited entitlement controls (*e.g.,* usernames and/or passwords) to a recipient of the information.

[8] A Managed Data Access Recipient is a subscriber to the Managed Data Access Distributor who receives a reformatted data feed in a controlled device or at a specific IP address. Market Data Access Recipients may be Professional or Non-Professional users.

[9] This fee is charged per IP address, which covers both primary and back-up IP addresses at a Managed Data Access Recipient.

[10] A ''Professional user'' is an authorized end-user of the ISE data feeds that has not qualified as a Non-Professional user.

[11] A controlled device is any device that a distributor of an ISE data feed permits to access the information in that data feed.

[12] The fee for the Top Quote Feed and the Spread Feed are not being changed.

[13] The fee for the Top Quote Feed and the Spread Feed are not being changed.

[14] 15 U.S.C. 78f(b).

[15] 15 U.S.C. 78f(b)(4).

[16] 15 U.S.C. 78f(b)(8).

subscribers.[17] Additionally, similar to ISE's Managed Data Order Feed, PHLX charges $2,000 per month per distributor and $500 per month per subscriber.[18] Further, the market data fees will be easier to understand because the proposed rule standardizes them.

In adopting Regulation NMS, the Commission granted self-regulatory organizations and broker-dealers increased authority and flexibility to offer new and unique market data to the public. It was believed that this authority would expand the amount of data available to consumers, and also spur innovation and competition for the provision of market data.

The Commission concluded that Regulation NMS—by deregulating the market in proprietary data—would itself further the Act's goals of facilitating efficiency and competition:

> [E]fficiency is promoted when broker-dealers who do not need the data beyond the prices, sizes, market center identifications of the NBBO and consolidated last sale information are not required to receive (and pay for) such data. The Commission also believes that efficiency is promoted when broker-dealers may choose to receive (and pay for) additional market data based on their own internal analysis of the need for such data.[19]

By removing ''unnecessary regulatory restrictions'' on the ability of exchanges to sell their own data, Regulation NMS advanced the goals of the Act and the principles reflected in its legislative history. If the free market should determine whether proprietary data is sold to broker-dealers at all, it follows that the price at which such data is sold should be set by the market as well.

On July 21, 2010, President Barak [sic] Obama signed into law H.R. 4173, the Dodd-Frank Wall Street Reform and Consumer Protection Act of 2010 (''Dodd-Frank Act''), which amended Section 19 of the Act. Among other things, Section 916 of the Dodd-Frank Act amended paragraph (A) of Section 19(b)(3) of the Act by inserting the phrase ''on any person, whether or not the person is a member of the self-regulatory organization'' after ''due, fee or other charge imposed by the self-regulatory organization.'' As a result, all SRO rule proposals establishing or changing dues, fees, or other charges are immediately effective upon filing regardless of whether such dues, fees, or other charges are imposed on members of the SRO, non-members, or both. Section 916 further amended paragraph (C) of Section 19(b)(3) of the Act to read, in pertinent part, ''At any time within the 60-day period beginning on the date of filing of such a proposed rule change in accordance with the provisions of paragraph (1) [of Section 19(b)], the Commission summarily may temporarily suspend the change in the rules of the self-regulatory organization made thereby, if it appears to the Commission that such action is necessary or appropriate in the public interest, for the protection of investors, or otherwise in furtherance of the purposes of this title. If the Commission takes such action, the Commission shall institute proceedings under paragraph (2)(B) [of Section 19(b)] to determine whether the proposed rule should be approved or disapproved.''

The decision of the United States Court of Appeals for the District of Columbia Circuit in *NetCoalition* v. *SEC,* 615 F.3d 525 (D.C. Cir. 2010), although reviewing a Commission decision made prior to the effective date of the Dodd-Frank Act, upheld the Commission's reliance upon competitive markets to set reasonable and equitably allocated fees for market data. ''In fact, the legislative history indicates that the Congress intended that the market system 'evolve through the interplay of competitive forces as unnecessary regulatory restrictions are removed' and that the SEC wield its regulatory power 'in those situations where competition may not be sufficient,' such as in the creation of a 'consolidated transactional reporting system.' ''[20]

The court's conclusions about Congressional intent are therefore reinforced by the Dodd-Frank Act amendments, which create a presumption that exchange fees, including market data fees, may take effect immediately, without prior Commission approval, and that the Commission should take action to suspend a fee change and institute a proceeding to determine whether the fee change should be approved or disapproved only where the Commission has concerns that the change may not be consistent with the Act.

The Exchange believes that the proposed fees for the ISE market data offering is consistent with the requirements of the Act because competition provides an effective constraint on the market data fees that the Exchange has the ability and the incentive to charge. ISE has a compelling need to attract order flow from market participants in order to maintain its share of trading volume. This compelling need to attract order flow imposes significant pressure on the Exchange to act reasonably in setting the fees for its market data offerings, particularly given that the market participants that will pay such fees often will be the same market participants from whom the Exchange must attract order flow. These market participants include broker-dealers that control the handling of a large volume of customer and proprietary order flow. Given the portability of order flow from one exchange to another, any exchange that sought to charge unreasonably high market data fees would risk alienating many of the same customers on whose orders it depends for competitive survival. ISE currently competes with 11 [sic] other options exchanges for order flow.

The Exchange is constrained in pricing its market data offerings by the availability to market participants of alternatives to purchasing these products. The Exchange must consider the extent to which market participants would choose one or more alternatives instead of purchasing the Exchange's data.

For the reasons cited above, the Exchange believes that the proposed fees for the ISE data feeds are equitable, fair, reasonable and not unreasonably discriminatory. The Exchange further believes that the continued availability of each of the ISE data feeds enhances transparency, fosters competition among orders and markets, and enables buyers and sellers to obtain better prices. In addition, the Exchange believes that no substantial countervailing basis exists to support a finding that the proposed terms and fees for these products fail to meet the requirements of the Act.

*B. Self-Regulatory Organization's Statement on Burden on Competition*

In accordance with Section 6(b)(8) of the Act,[21] the Exchange does not believe that the proposed rule change will impose any burden on intermarket or intramarket competition that is not necessary or appropriate in furtherance of the purposes of the Act. Notwithstanding its determination that the Commission may rely upon competition to establish fair and equitably allocated fees for market data,

[17] *See* IX. Proprietary Data Feed Fees, PHLX Orders, available at *http://www.nasdaqtrader.com/Micro.aspx?id=phlxpricing.*

[18] *See* IX. Proprietary Data Feed Fees, Fee Schedule for Managed Data Solutions for Non-Display Usage, available at *http://www.nasdaqtrader.com/Micro.aspx?id=phlxpricing.*

[19] *See* Securities Exchange Act Release No. 51808 (June 9, 2005), 70 FR 37496 (June 29, 2005).

[20] *NetCoalition,* at 535 (quoting H.R. Rep. No. 94–229, at 92 (1975), *as reprinted in* 1975 U.S.C.C.A.N. 321, 323).

[21] 15 U.S.C. 78f(b)(8).

the *NetCoaltion* [sic] court found that the Commission had not, in that case, compiled a record that adequately supported its conclusion that the market for the data at issue in the case was competitive. The Exchange believes that a record may readily be established to demonstrate the competitive nature of the market in question.

For the reasons discussed above, the Exchange believes that the Dodd-Frank Act amendments to Section 19 materially alter the scope of the Commission's review of future market data filings, by creating a presumption that all fees may take effect immediately, without prior analysis by the Commission of the competitive environment. Even in the absence of this important statutory change, however, the Exchange believes that a record may readily be established to demonstrate the competitive nature of the market in question.

There is intense competition between trading platforms that provide transaction execution and routing services and proprietary data products. Transaction execution and proprietary data products are complementary in that market data is both an input and a byproduct of the execution service. In fact, market data and trade execution are a paradigmatic example of joint products with joint costs. The decision whether and on which platform to post an order will depend on the attributes of the platform where the order can be posted, including the execution fees, data quality and price and distribution of its data products. Without the prospect of a taking order seeing and reacting to a posted order on a particular platform, the posting of the order would accomplish little. Without trade executions, exchange data products cannot exist. Data products are valuable to many end users only insofar as they provide information that end users expect will assist them or their customers in making trading decisions.

The costs of producing market data include not only the costs of the data distribution infrastructure, but also the costs of designing, maintaining, and operating the exchange's transaction execution platform and the cost of regulating the exchange to ensure its fair operation and maintain investor confidence. The total return that a trading platform earns reflects the revenues it receives from both products and the joint costs it incurs. Moreover, an exchange's customers view the costs of transaction executions and of data as a unified cost of doing business with the exchange. A broker-dealer will direct orders to a particular exchange only if the expected revenues from executing trades on the exchange exceed net transaction execution costs and the cost of data that the broker-dealer chooses to buy to support its trading decisions (or those of its customers). The choice of data products is, in turn, a product of the value of the products in making profitable trading decisions. If the cost of the product exceeds its expected value, the broker-dealer will choose not to buy it.

Moreover, as a broker-dealer chooses to direct fewer orders to a particular exchange, the value of the product to that broker-dealer decrease, for two reasons. First, the product will contain less information, because executions of the broker-dealer's orders will not be reflected in it. Second, and perhaps more important, the product will be less valuable to that broker-dealer because it does not provide information about the venue to which it is directing its orders. Data from the competing venue to which the broker-dealer is directing orders will become correspondingly more valuable. Thus, a super-competitive increase in the fees charged for either transactions or data has the potential to impair revenues from both products. ''No one disputes that competition for order flow is 'fierce'.'' [22] However, the existence of fierce competition for order flow implies a high degree of price sensitivity on the part of broker-dealers with order flow, since they may readily reduce costs by directing orders toward the lowest-cost trading venues. A broker-dealer that shifted its order flow from one platform to another in response to order execution price differentials would both reduce the value of that platform's market data and reduce its own need to consume data from the disfavored platform. Similarly, if a platform increases its market data fees, the change will affect the overall cost of doing business with the platform, and affected broker-dealers will assess whether they can lower their trading costs by directing orders elsewhere and thereby lessening the need for the more expensive data.

Analyzing the cost of market data distribution in isolation from the cost of all of the inputs supporting the creation of market data will inevitably underestimate the cost of the data. Thus, because it is impossible to create data without a fast, technologically robust, and well-regulated execution system, system costs and regulatory costs affect the price of market data. It would be equally misleading, however, to attribute all of the exchange's costs to the market data portion of an exchange's joint product. Rather, all of the exchange's costs are incurred for the unified purposes of attracting order flow, executing and/or routing orders, and generating and selling data about market activity. The total return that an exchange earns reflects the revenues it receives from the joint products and the total costs of the joint products.

Competition among trading platforms can be expected to constrain the aggregate return each platform earns from the sale of its joint products, but different platforms may choose from a range of possible, and equally reasonable, pricing strategies as the means of recovering total costs. For example, some platform may choose to pay rebates to attract orders, charge relatively low prices for market information (or provide information free of charge) and charge relatively high prices for accessing posted liquidity. Other platforms may choose a strategy of paying lower rebates (or no rebates) to attract orders, setting relatively high prices for market information, and setting relatively low prices for accessing posted liquidity. In this environment, there is no economic basis for regulating maximum prices for one of the joint products in an industry in which suppliers face competitive constraints with regard to the joint offering.

The market for market data products is competitive and inherently contestable because there is fierce competition for the inputs necessary to the creation of proprietary data and strict pricing discipline for the proprietary products themselves. Numerous exchanges compete with each other for listings, trades, and market data itself, providing virtually limitless opportunities for entrepreneurs who wish to produce and distribute their own market data. This proprietary data is produced by each individual exchange, as well as other entities, in a vigorously competitive market.

Broker-dealers currently have numerous alternative venues for their order flow, including numerous self-regulatory organization (''SRO'') markets, as well as internalizing broker-dealers (''BDs'') and various forms of alternative trading systems (''ATSs''), including dark pools and electronic communication networks (''ECNs''). Each SRO market competes to produce transaction reports via trade executions, and two FINRA-regulated Trade Reporting Facilities (''TRFs'') compete to attract internalized transaction reports. Competitive markets for order flow, executions, and transaction reports provide pricing discipline for the inputs of proprietary data products.

[22] *NetCoalition,* at 24.

The large number of SROs, TRFs, BDs, and ATSs that currently produce proprietary data or are currently capable of producing it provides further pricing discipline for proprietary data products. Each SRO, TRF, ATS, and BD is currently permitted to produce proprietary data products, and many currently do.

Any ATS or BD can combine with any other ATS, BD, or multiple ATSs or BDs to produce joint proprietary data products. Additionally, order routers and market data vendors can facilitate single or multiple broker-dealers' production of proprietary data products. The potential sources of proprietary products are virtually limitless.

The fact that proprietary data from ATSs, BDs, and vendors can by-pass SROs is significant in two respects. First, non-SROs can compete directly with SROs for the production and sale of proprietary data products, as BATS and Arca did before registering as exchanges by publishing proprietary book data on the Internet. Second, because a single order or transaction report can appear in an SRO proprietary product, a non-SRO proprietary product, or both, the data available in proprietary products is exponentially greater than the actual number of orders and transaction reports that exist in the marketplace. Market data vendors provide another form of price discipline for proprietary data products because they control the primary means of access to end users. Vendors impose price restraints based upon their business models. For example, vendors such as Bloomberg and Reuters that assess a surcharge on data they sell may refuse to offer proprietary products that end users will not purchase in sufficient numbers. Internet portals, such as Google, impose a discipline by providing only data that will enable them to attract ''eyeballs'' that contribute to their advertising revenue. Retail broker-dealers, such as Schwab and Fidelity, offer their customers proprietary data only if it promotes trading and generates sufficient commission revenue. Although the business models may differ, these vendors' pricing discipline is the same: They can simply refuse to purchase any proprietary data product that fails to provide sufficient value. The Exchange and other producers of proprietary data products must understand and respond to these varying business models and pricing disciplines in order to market proprietary data products successfully.

*C. Self-Regulatory Organization's Statement on Comments on the Proposed Rule Change Received From Members, Participants, or Others*

The Exchange has not solicited, and does not intend to solicit, comments on this proposed rule change. The Exchange has not received any unsolicited written comments from members or other interested parties.

**III. Date of Effectiveness of the Proposed Rule Change and Timing for Commission Action**

The foregoing rule change has become effective pursuant to Section 19(b)(3)(A)(ii) of the Act,[23] and subparagraph (f)(2) of Rule 19b–4 thereunder,[24] because it establishes a due, fee, or other charge imposed by ISE.

At any time within 60 days of the filing of such proposed rule change, the Commission summarily may temporarily suspend such rule change if it appears to the Commission that such action is necessary or appropriate in the public interest, for the protection of investors, or otherwise in furtherance of the purposes of the Act. If the Commission takes such action, the Commission shall institute proceedings to determine whether the proposed rule should be approved or disapproved.

**IV. Solicitation of Comments**

Interested persons are invited to submit written data, views, and arguments concerning the foregoing, including whether the proposed rule change is consistent with the Act. Comments may be submitted by any of the following methods:

*Electronic Comments*

- Use the Commission's Internet comment form (*http://www.sec.gov/rules/sro.shtml*); or
- Send an email to *rule-comments@sec.gov.* Please include File Number SR–ISE–2015–33 on the subject line.

*Paper Comments*

- Send paper comments in triplicate to Brent J. Fields, Secretary, Securities and Exchange Commission, 100 F Street NE., Washington, DC 20549–1090.

All submissions should refer to File Number SR–ISE–2015–33. This file number should be included on the subject line if email is used. To help the Commission process and review your comments more efficiently, please use only one method. The Commission will post all comments on the Commission's Internet Web site (*http://www.sec.gov/rules/sro.shtml*). Copies of the submission, all subsequent amendments, all written statements with respect to the proposed rule change that are filed with the Commission, and all written communications relating to the proposed rule change between the Commission and any person, other than those that may be withheld from the public in accordance with the provisions of 5 U.S.C. 552, will be available for Web site viewing and printing in the Commission's Public Reference Room, 100 F Street NE., Washington, DC 20549 on official business days between the hours of 10:00 a.m. and 3:00 p.m. Copies of such filing also will be available for inspection and copying at the principal office of the Exchange. All comments received will be posted without change; the Commission does not edit personal identifying information from submissions. You should submit only information that you wish to make available publicly. All submissions should refer to File Number SR–ISE–2015–33, and should be submitted on or before November 12, 2015.

For the Commission, by the Division of Trading and Markets, pursuant to delegated authority.[25]

**Brent J. Fields,**

*Secretary.*

[FR Doc. 2015–26811 Filed 10–21–15; 8:45 am]

**BILLING CODE 8011–01–P**

[23] 15 U.S.C. 78s(b)(3)(A)(ii).

[24] 17 CFR 240.19b–4(f)(2).

[25] 17 CFR 200.30–3(a)(12).

## SECURITIES AND EXCHANGE COMMISSION

**[Release No. 34–76180; File No. SR–ISEGemini–2015–19]**

## Self-Regulatory Organizations; ISE Gemini, LLC; Notice of Filing and Immediate Effectiveness of Proposed Rule Change To Amend the Schedule of Fees

October 16, 2015.

Pursuant to Section 19(b)(1) of the Securities Exchange Act of 1934 (the ''Act''),[1] and Rule 19b–4 thereunder,[2] notice is hereby given that on October 1, 2015, ISE Gemini, LLC (the ''Exchange'' or ''ISE Gemini'') filed with the Securities and Exchange Commission (''Commission'') the proposed rule change, as described in Items I, II, and III below, which Items have been prepared by the self-regulatory organization. The Commission is publishing this notice to

[1] 15 U.S.C. 78s(b)(1).

[2] 17 CFR 240.19b–4.

solicit comments on the proposed rule change from interested persons.

**I. Self-Regulatory Organization's Statement of the Terms of Substance of the Proposed Rule Change**

ISE Gemini proposes to amend language in the Schedule of Fees related to excluding days from its average daily volume calculations when the market is not open for the entire trading day. The text of the proposed rule change is available on the Exchange's Internet Web site at *http://www.ise.com,* at the principal office of the Exchange, and at the Commission's Public Reference Room.

**II. Self-Regulatory Organization's Statement of the Purpose of, and Statutory Basis for, the Proposed Rule Change**

In its filing with the Commission, the Exchange included statements concerning the purpose of, and basis for, the proposed rule change and discussed any comments it received on the proposed rule change. The text of these statements may be examined at the places specified in Item IV below. The self-regulatory organization has prepared summaries, set forth in Sections A, B and C below, of the most significant aspects of such statements.

*A. Self-Regulatory Organization's Statement of the Purpose of, and Statutory Basis for, the Proposed Rule Change*

1. Purpose

Currently, for purposes of determining a member's average daily volume (''ADV''), any day that the market is not open for the entire trading day may be excluded from such calculation. The Exchange proposes to amend language in the Schedule of Fees related to excluding days from the ADV calculations used to determine applicable fee and rebate tiers. Specifically, the Exchange proposes to permit days to be excluded from its ADV calculations where the Exchange is technically open for the entire trading day, but has instructed members to route away due to a systems or other error that ultimately does not impact trading on the Exchange. Currently, the Exchange's ability to remove days from its ADV calculations is limited to days where the market is not open for the entire trading day. This allows the Exchange to exclude days, for example, where the Exchange declares a trading halt in all securities, honors a market-wide trading halt declared by another market, or closes early for holiday observance. Because these days generally have artificially lower trading volume, the Exchange believes that it is reasonable and equitable to not include such days in determining fee and rebate tiers. The Exchange notes, however, that if it has a systems issue in the morning before the market opens, it may instruct members to route away to other markets. If the systems issue continues into trading hours, the Exchange is permitted to exclude the day for all members that would have a lower ADV with the day included. If, however, the systems issue is resolved prior to the opening of trading, the Exchange is not permitted to exclude the day from its ADV calculations. This is the case regardless of the fact that many members would have already made arrangements to route away in accordance with the Exchange's instructions. To prevent this undesirable result, and preserve the Exchange's intent behind adopting volume-based pricing, the Exchange proposes to allow days to be excluded from its ADV calculation whenever all members are instructed, in writing, to route their orders to other markets.

2. Statutory Basis

The Exchange believes that the proposed rule change is consistent with the provisions of Section 6 of the Act,[3] in general, and Section 6(b)(4) of the Act,[4] in particular, in that it is designed to provide for the equitable allocation of reasonable dues, fees, and other charges among its members and other persons using its facilities. The Exchange believes that it is reasonable and equitable to exclude a day from its ADV calculations when members are instructed to route their orders to other markets as this preserves the Exchange's intent behind adopting volume-based pricing, and avoids penalizing members that follow this instruction. Without this change, members that route away in accordance with the Exchange's instructions may be negatively impacted, resulting in an effective cost increase for those members. The Exchange further believes that the proposed rule change is not unfairly discriminatory because it applies equally to all members and ADV calculations. As is the Exchange's current practice, the Exchange will inform members of any day to be excluded from its ADV calculations by sending members a notice and posting such notice on the Exchange's Web site.

*B. Self-Regulatory Organization's Statement on Burden on Competition*

In accordance with Section 6(b)(8) of the Act,[5] the Exchange does not believe that the proposed rule change will impose any burden on intermarket or intramarket competition that is not necessary or appropriate in furtherance of the purposes of the Act. The Exchange believes that the proposed modifications to its ADV calculation are pro-competitive and will result in lower total costs to end users, a positive outcome of competitive markets. The Exchange operates in a highly competitive market in which market participants can readily direct their order flow to competing venues. In such an environment, the Exchange must continually review, and consider adjusting, its fees and rebates to remain competitive with other exchanges. For the reasons described above, the Exchange believes that the proposed fee changes reflect this competitive environment.

*C. Self-Regulatory Organization's Statement on Comments on the Proposed Rule Change Received From Members, Participants, or Others*

The Exchange has not solicited, and does not intend to solicit, comments on this proposed rule change. The Exchange has not received any unsolicited written comments from members or other interested parties.

**III. Date of Effectiveness of the Proposed Rule Change and Timing for Commission Action**

The foregoing rule change has become effective pursuant to Section 19(b)(3)(A)(ii) of the Act,[6] and subparagraph (f)(2) of Rule 19b–4 thereunder,[7] because it establishes a due, fee, or other charge imposed by ISE Gemini.

At any time within 60 days of the filing of such proposed rule change, the Commission summarily may temporarily suspend such rule change if it appears to the Commission that such action is necessary or appropriate in the public interest, for the protection of investors, or otherwise in furtherance of the purposes of the Act. If the Commission takes such action, the Commission shall institute proceedings to determine whether the proposed rule should be approved or disapproved.

**IV. Solicitation of Comments**

Interested persons are invited to submit written data, views, and

[3] 15 U.S.C. 78f.

[4] 15 U.S.C. 78f(b)(4).

[5] 15 U.S.C. 78f(b)(8).

[6] 15 U.S.C. 78s(b)(3)(A)(ii).

[7] 17 CFR 240.19b–4(f)(2).

arguments concerning the foregoing, including whether the proposed rule change is consistent with the Act. Comments may be submitted by any of the following methods:

*Electronic Comments*

- Use the Commission's Internet comment form (*http://www.sec.gov/rules/sro.shtml*); or
- Send an email to *rule-comments@sec.gov.* Please include File Number SR–ISEGemini–2015–19 on the subject line.

*Paper Comments*

- Send paper comments in triplicate to Brent J. Fields, Secretary, Securities and Exchange Commission, 100 F Street NE., Washington, DC 20549–1090.

All submissions should refer to File Number SR–ISEGemini–2015–19. This file number should be included on the subject line if email is used. To help the Commission process and review your comments more efficiently, please use only one method. The Commission will post all comments on the Commission's Internet Web site (*http://www.sec.gov/rules/sro.shtml*). Copies of the submission, all subsequent amendments, all written statements with respect to the proposed rule change that are filed with the Commission, and all written communications relating to the proposed rule change between the Commission and any person, other than those that may be withheld from the public in accordance with the provisions of 5 U.S.C. 552, will be available for Web site viewing and printing in the Commission's Public Reference Room, 100 F Street NE., Washington, DC 20549 on official business days between the hours of 10:00 a.m. and 3:00 p.m. Copies of such filing also will be available for inspection and copying at the principal office of the Exchange. All comments received will be posted without change; the Commission does not edit personal identifying information from submissions. You should submit only information that you wish to make available publicly. All submissions should refer to File Number SR–ISEGemini–2015–19, and should be submitted on or before November 12, 2015.

For the Commission, by the Division of Trading and Markets, pursuant to delegated authority.[8]

**Brent J. Fields,**

*Secretary.*

[FR Doc. 2015–26810 Filed 10–21–15; 8:45 am]

**BILLING CODE 8011–01–P**

[8] 17 CFR 200.30–3(a)(12).

## SMALL BUSINESS ADMINISTRATION

### Data Collection Available for Public Comments

**ACTION:** 60-day notice and request for comments.

**SUMMARY:** The Small Business Administration (SBA) intends to request approval, from the Office of Management and Budget (OMB) for the collection of information described below. The Paperwork Reduction Act (PRA) of 1995, 44 U.S.C Chapter 35 requires federal agencies to publish a notice in the **Federal Register** concerning each proposed collection of information before submission to OMB, and to allow 60 days for public comment in response to the notice. This notice complies with that requirement.

**DATES:** Submit comments on or before December 21, 2015.

**ADDRESSES:** Send all comments to Travis Farris, Counsel to Inspector General, Office of Inspector General, Small Business Administration, 409 3rd Street, 5th Floor, Washington, DC 20416.

**FOR FURTHER INFORMATION CONTACT:** Travis Farris, Counsel to Inspector General, Inspector General, *travis.farris@sba.gov* 202–205–7178, or Curtis B. Rich, Management Analyst, 202–205–7030, *curtis.rich@sba.gov.*

**SUPPLEMENTARY INFORMATION:** Small Business Administration SBA Form 912 is used to collect information needed to make character determinations with respect to applicants for monetary loan assistance or applicants for participation in SBA programs. The information collected is used as the basis for conducting name checks at national Federal Bureau of Investigations (FBI) and local levels.

### Solicitation of Public Comments

SBA is requesting comments on (a) Whether the collection of information is necessary for the agency to properly perform its functions; (b) whether the burden estimates are accurate; (c) whether there are ways to minimize the burden, including through the use of automated techniques or other forms of information technology; and (d) whether there are ways to enhance the quality, utility, and clarity of the information.

### Summary of Information Collection

*Title:* Statement of Personal History.

*Description of Respondents:* Applicants participationing in SBA programs.

*Form Number:* SBA Form 912.

*Total Estimated Annual Responses:* 142,000.

*Total Estimated Annual Hour Burden:* 35,500.

**Curtis B. Rich,**

*Management Analyst.*

[FR Doc. 2015–26664 Filed 10–21–15; 8:45 am]

**BILLING CODE 8025–01–P**

## SOCIAL SECURITY ADMINISTRATION

**[Docket No: SSA–2015–0062 ]**

### Agency Information Collection Activities: Proposed Request and Comment Request

The Social Security Administration (SSA) publishes a list of information collection packages requiring clearance by the Office of Management and Budget (OMB) in compliance with Public Law 104–13, the Paperwork Reduction Act of 1995, effective October 1, 1995. This notice include an extension and a revision of OMB-approved information collections.

SSA is soliciting comments on the accuracy of the agency's burden estimate; the need for the information; its practical utility; ways to enhance its quality, utility, and clarity; and ways to minimize burden on respondents, including the use of automated collection techniques or other forms of information technology. Mail, email, or fax your comments and recommendations on the information collection(s) to the OMB Desk Officer and SSA Reports Clearance Officer at the following addresses or fax numbers.

(OMB) Office of Management and Budget, Attn: Desk Officer for SSA, Fax: 202–395–6974, Email address: *OIRA_Submission@omb.eop.gov.*

(SSA) Social Security Administration, OLCA, Attn: Reports Clearance Director, 3100 West High Rise, 6401 Security Blvd., Baltimore, MD 21235, Fax: 410–966–2830, Email address: *OR.Reports.Clearance@ssa.gov.*

Or you may submit your comments online through *www.regulations.gov,* referencing Docket ID Number [SSA–2015–0062].

I. The information collection below is pending at SSA. SSA will submit it to OMB within 60 days from the date of this notice. To be sure we consider your comments, we must receive them no later than December 21, 2015. Individuals can obtain copies of the collection instruments by writing to the above email address.

**Protecting the Public and Our Personnel To Ensure Operational Effectiveness (RIN 0960–AH35), Regulation 3729I—20 CFR 422.905, 422.906—0960–0796.**

*Background*

On September 2, 2011, the agency published interim final regulations and notifications processes for the restrictive access and alternative service process at 76 FR 54700. These regulations explain the process we follow when we restrict individuals from receiving in-person services in our field offices and provide them, instead, with alternative services. We published these rules to create a safer environment for our personnel and members of the public who use our facilities, while ensuring we continue to serve the American people with as little disruption to our operations as possible.

Under our regulations at 20 CFR 422.905, an individual whom we restrict access to our facilities has the opportunity to appeal our decision within 60 days of the date of the restrictive access and alternative service notice. Under 20 CFR 422.906, if the individual does not appeal the decision within the 60 days; if we restrict the individual prior to the effective date of this regulation; or if the appeal results in a denial, the individual has another opportunity to request review of the restriction after a three-year period. We make this periodic review available to all restricted individuals once every three years.

*Information Collection Description*

The interim final restrictive access and alternative services rules contain two public reporting burdens:

- 20 CFR 422.905—after SSA issues a restrictive access and alternative service decision against an individual, the individual has 60 days to appeal the determination. Restricted individuals must submit a written appeal stating why they believe SSA should rescind the restriction and allow them to conduct business with us on a face-to-face basis in one of our offices. There is no printed form for this request; restricted individuals create their own written statement of appeal, and submit it to a sole decision-maker in the regional office of the region where the restriction originated. The individuals may also provide additional documentation to support their appeal.
- 20 CFR 422.906—three years after the original restrictive access and alternative service decision, restricted individuals may re-submit a written appeal of the decision. The same criteria apply as for the original appeal: (1) It must be in writing; (2) it must go to a sole decision-maker in the regional office of the region where the restriction originated for review; and (3) it may accompany supporting documentation.

Respondents for this collection are individuals appealing their restrictions from in-person services at SSA field offices.

Type of Request: Extension of an OMB-approved information collection.

| Regulation section | Number of respondents | Frequency of response | Average burden per response (minutes) | Estimated total annual burden (hours) |
|---|---|---|---|---|
| 20 CFR 422.905 | 75 | 1 | 15 | 19 |
| 20 CFR 422.906 | 75 | 1 | 20 | 25 |
| Totals | 150 | | | 44 |

II. SSA submitted the information collection below to OMB for clearance. Your comments regarding the information collection would be most useful if OMB and SSA receive them 30 days from the date of this publication. To be sure we consider your comments, we must receive them no later than November 23, 2015. Individuals can obtain copies of the OMB clearance packages by writing to *OR.Reports.Clearance@ssa.gov.*

Statement of Household Expenses and Contributions—20 CFR 416.1130–416.1148—0960–0456. SSA bases eligibility for Supplemental Security Income (SSI) on the needs of the recipient. In part, we assess need by determining the amount of income a recipient receives. This income includes in-kind support and maintenance in the form of food and shelter provided by others. SSA uses Form SSA–8011–F3, to determine whether the claimant or recipient receives in-kind support and maintenance. This is necessary to determine (1) the claimant or recipient's eligibility for SSI and (2) the SSI payment amount. SSA only uses this form in cases where SSA needs the householder's (head of household) corroboration of in-kind support and maintenance. Respondents are householders of homes in which an SSI applicant or recipient resides

Type of Request: Revision of an OMB-approved information collection.

| Modality of completion | Number of respondents | Frequency of response | Average burden per response (minutes) | Estimated total annual burden (hours) |
|---|---|---|---|---|
| SSA–8011–F3 | 417,025 | 1 | 15 | 104,256 |

Dated: October 19, 2015.

**Naomi R. Sipple,**

*Reports Clearance Officer, Social Security Administration.*

[FR Doc. 2015–26821 Filed 10–21–15; 8:45 am]

BILLING CODE 4191–02–P

## DEPARTMENT OF STATE

**[Public Notice: 9321]**

## Overseas Security Advisory Council (OSAC) Meeting Notice

### Closed Meeting

The Department of State announces a meeting of the U.S. State Department—Overseas Security Advisory Council on November 17, 2015. Pursuant to Section 10(d) of the Federal Advisory Committee Act (5 U.S.C. Appendix), 5 U.S.C. 552b(c)(4), and 5 U.S.C. 552b(c)(7)(E), it has been determined that the meeting will be closed to the public. The meeting will focus on an examination of corporate security policies and procedures and will involve extensive discussion of trade

secrets and proprietary commercial information that is privileged and confidential, and will discuss law enforcement investigative techniques and procedures. The agenda will include updated committee reports, a global threat overview, and other matters relating to private sector security policies and protective programs and the protection of U.S. business information overseas.

For more information, contact Marsha Thurman, Overseas Security Advisory Council, U.S. Department of State, Washington, DC 20522–2008, phone: 571–345–2214.

Dated: October 2, 2015.

**Bill A. Miller,**

*Director of the Diplomatic Security Service, U.S. Department of State.*

[FR Doc. 2015–26884 Filed 10–21–15; 8:45 am]

**BILLING CODE 4710–43–P**

## DEPARTMENT OF TRANSPORTATION

### Federal Aviation Administration

### Eleventh Meeting: RTCA Tactical Operations Committee (TOC)

**AGENCY:** Federal Aviation Administration (FAA), U.S. Department of Transportation (DOT).

**ACTION:** Notice of Eleventh RTCA Tactical Operations Committee Meeting.

**SUMMARY:** The FAA is issuing this notice to advise the public of the Eleventh RTCA Tactical Operations Committee meeting.

**DATES:** The meeting will be held November 12th from 9:00 a.m.–4:00 p.m.

**ADDRESSES:** The meeting will be held at RTCA, Inc., 1150 18th Street NW., Suite 910, Washington, DC 20036, Tel: (202) 330–0655.

**FOR FURTHER INFORMATION CONTACT:** The RTCA Secretariat, 1150 18th Street NW., Suite 910, Washington, DC 20036, or by telephone at (202) 833–9339, fax at (202) 833–9434, or Web site at *http://www.rtca.org* or Trin Mitra, TOC Secretary, RTCA, Inc., *tmitra@rtca.org,* (202) 330–0655.

**SUPPLEMENTARY INFORMATION:** Pursuant to section 10(a)(2) of the Federal Advisory Committee Act (Pub. L. 92–463, 5 U.S.C., App.), notice is hereby given for a meeting of RTCA Tactical Operations Committee. The agenda will include the following:

**Thursday, November 12, 2015**

1. Opening of Meeting/Introduction of TOC Members—Co Chairs Dale Wright and Bryan Quigley
2. Official Statement of Designated Federal Official—Elizabeth Ray
3. Approval of July 21, 2015 Meeting Summary
4. FAA Update—Elizabeth Ray
5. Recommendation on Final NOTAM Search Implementation
6. Update and Draft Recommendations from Airport Construction Task Group
7. Update and Draft Recommendations from National Procedure Assessment Task Group
8. FAA Response to Previous TOC Recommendations: Caribbean Operations, GPS Adjacent Band Compatibility and Class B Airspace
9. Status Update from Regional Task Groups
10. Update on the NextGen Advisory Committee (NAC)
11. Update on the VOR Minimum Operating Network (MON) Program
12. Anticipated Issues for TOC consideration and action at the next meeting
13. Other Business
14. Adjourn

Attendance is open to the interested public but limited to space availability. With the approval of the chairman, members of the public may present oral statements at the meeting. Plenary information will be provided upon request. Persons wishing to present statements or obtain information should contact the person listed in the **FOR FURTHER INFORMATION CONTACT** section. Members of the public may present a written statement to the committee at any time.

Dated: Issued in Washington, DC, on October 19, 2015.

**Latasha Robinson,**

*Management & Program Analyst, Next Generation, Enterprise Support Services Division, Federal Aviation Administration.*

[FR Doc. 2015–26865 Filed 10–21–15; 8:45 am]

**BILLING CODE 4910–13–P**

## DEPARTMENT OF TRANSPORTATION

### Federal Aviation Administration

### Twenty-Fifth Meeting: RTCA Special Committee (217) Aeronautical Databases Joint with EUROCAE WG–44—Aeronautical Databases

**AGENCY:** Federal Aviation Administration (FAA), U.S. Department of Transportation (DOT).

**ACTION:** Notice of Twenty-Fifth RTCA Special Committee 217 Meeting.

**SUMMARY:** The FAA is issuing this notice to advise the public of the Twenty-Fifth RTCA Special Committee 217 meeting.

**DATES:** The meeting will be held February 9th–11th from 9:00 a.m.–5:00 p.m.

**ADDRESSES:** The meeting will be held at Jeppesen Office, Frankfurter Str. 233, 63263 Neu-Isenburg, Germany, Tel: (202) 330–0662.

**FOR FURTHER INFORMATION CONTACT:** The RTCA Secretariat, 1150 18th Street NW., Suite 910, Washington, DC 20036, or by telephone at (202) 833–9339, fax at (202) 833–9434, or Web site at *http://www.rtca.org* or Jennifer Iversen, Program Director, RTCA, Inc., *jiversen@rtca.org,* (202) 330–0662.

**SUPPLEMENTARY INFORMATION:** Pursuant to section 10(a)(2) of the Federal Advisory Committee Act (Pub. L. 92–463, 5 U.S.C., App.), notice is hereby given for a meeting of RTCA Special Committee 217. The agenda will include the following:

**Tuesday, February 9, 2016 (Opening Plenary Session)**

1. Co-Chairmen's remarks and introductions
2. Approve minutes from 24th meeting
3. Review and approve meeting agenda for 25th meeting
4. Schedule for this week

**Tuesday–Thursday, February 9–11, 2016 (WG Sessions)**

1. Review of WG–44/SC–217 ToR and discussion on the scope of the work
2. Review of current ED–77/DO–201A
3. Other related standards and initiatives
   a. ICAO—FAA—EU SES—EUROCAE/RTCA standards—ARINC 424
4. Summary and conclusions on the updates to be made
5. Organization of the updating effort, working arrangements and implementation

**Friday, February 11, 2016 (Closing Plenary Session)**

1. Review of the ISRA with SC–206
2. Meeting wrap-up: Main conclusions and way forward
3. Review of action items and next meetings
4. Any other business and adjourn

Attendance is open to the interested public but limited to space availability. Persons who wish to register may do so at *https://jeppesen.wufoo.com/forms/z1chez2i1oitnrp/.* With the approval of the chairman, members of the public may present oral statements at the meeting. Plenary information will be provided upon request. Persons wishing to present statements or obtain information should contact the person listed in the **FOR FURTHER INFORMATION CONTACT** section. Members of the public

may present a written statement to the committee at any time.

Issued in Washington, DC, on October 19, 2015.

**Latasha Robinson,**

*Management & Program Analyst, Next Generation, Enterprise Support Services Division, Federal Aviation Administration.*

[FR Doc. 2015–26866 Filed 10–21–15; 8:45 am]

BILLING CODE 4910–13–P

## DEPARTMENT OF TRANSPORTATION

### Federal Aviation Administration

### Seventh Meeting: RTCA Special Committee (231) Terrain Awareness Warning Systems (TAWS)

**AGENCY:** Federal Aviation Administration (FAA), U.S. Department of Transportation (DOT).

**ACTION:** Notice of Seventh RTCA Special Committee 231 Meeting.

**SUMMARY:** The FAA is issuing this notice to advise the public of the seventh RTCA Special Committee 231 meeting.

**DATES:** The meeting will be held December 8th–10th from 9:00 a.m.–5:00 p.m.

**ADDRESSES:** The meeting will be held at RTCA, Inc., 1150 18th Street NW., Suite 450, Washington, DC, 20036, Tel: (202) 330–0654.

**FOR FURTHER INFORMATION CONTACT:** The RTCA Secretariat, 1150 18th Street NW., Suite 910, Washington, DC 20036, or by telephone at (202) 833–9339, fax at (202) 833–9434, or Web site at *http://www.rtca.org* or Hal Moses, Program Director, RTCA, Inc., *hmoses@rtca.org,* (202) 330–0654.

**SUPPLEMENTARY INFORMATION:** Pursuant to section 10(a)(2) of the Federal Advisory Committee Act (Pub. L. 92–463, 5 U.S.C., App.), notice is hereby given for a meeting of RTCA Special Committee 231. The agenda will include the following:

**Tuesday, December 8, 2015**

1. Welcome/Introduction
2. Administrative Remarks
3. Agenda Review
4. Summary of Working Group activities
5. Other Business
6. Date and Place of Next Meeting

**Wednesday, December 9, 2015**

1. Continuation of Plenary or Working Group Session

**Thursday, December 10, 2015**

1. Continuation of Plenary or Working Group Session

Attendance is open to the interested public but limited to space availability. With the approval of the chairman, members of the public may present oral statements at the meeting. Plenary information will be provided upon request. Persons wishing to present statements or obtain information should contact the person listed in the **FOR FURTHER INFORMATION CONTACT** section. Members of the public may present a written statement to the committee at any time.

Issued in Washington, DC, on October 16, 2015.

**Latasha Robinson,**

*Management & Program Analyst, Next Generation, Enterprise Support Services Division, Federal Aviation Administration.*

[FR Doc. 2015–26864 Filed 10–21–15; 8:45 am]

BILLING CODE 4910–13–P

## DEPARTMENT OF TRANSPORTATION

### Federal Aviation Administration

### Twenty-First Meeting: RTCA Special Committee (222) AMS(R)S

**AGENCY:** Federal Aviation Administration (FAA), U.S. Department of Transportation (DOT).

**ACTION:** Notice of Twenty-First RTCA Special Committee 222 Meeting.

**SUMMARY:** The FAA is issuing this notice to advise the public of the Twenty-First RTCA Special Committee 222 meeting.

**DATES:** The meeting will be held November 9th from 9:00 a.m.–4:00 p.m.

**ADDRESSES:** The meeting will be held at RTCA, Inc., 1150 18th Street NW., Suite 910, Washington, DC 20036, Tel: (202) 330–0662.

**FOR FURTHER INFORMATION CONTACT:** The RTCA Secretariat, 1150 18th Street NW., Suite 910, Washington, DC 20036, or by telephone at (202) 833–9339, fax at (202) 833–9434, or Web site at *http://www.rtca.org* or Jennifer Iversen, Program Director, RTCA, Inc., *jiversen@rtca.org,* (202) 330–0662.

**SUPPLEMENTARY INFORMATION:** Pursuant to section 10(a)(2) of the Federal Advisory Committee Act (Pub. L. 92–463, 5 U.S.C., App.), notice is hereby given for a meeting of RTCA Special Committee 222. The agenda will include the following:

**Monday, November 9, 2015**

1. Greetings & Attendance
2. Review summaries of the January 2015, April 2015, and September 2015 meetings, including the joint meetings with WG–82 in April and September
3. Discussion and resolution of the FRAC comments submitted on DO–262B, Change 1. This change affects the Iridium technique-specific material
4. If time permits, the floor will be open to discussion of any other business related to the current Terms of Reference of SC–222
5. Review of next scheduled meetings of SC–222 and joint SC–222/WG–82

Attendance is open to the interested public but limited to space availability. With the approval of the chairman, members of the public may present oral statements at the meeting. Plenary information will be provided upon request. Persons wishing to present statements or obtain information should contact the person listed in the **FOR FURTHER INFORMATION CONTACT** section. Members of the public may present a written statement to the committee at any time.

Issued in Washington, DC, on October 16, 2015.

**Latasha Robinson,**

*Management & Program Analyst, Next Generation, Enterprise Support Services Division, Federal Aviation Administration.*

[FR Doc. 2015–26862 Filed 10–21–15; 8:45 am]

BILLING CODE 4910–13–P

## DEPARTMENT OF TRANSPORTATION

### Federal Aviation Administration

### Agency Information Collection Activities: Requests for Comments; Clearance of Renewed Approval of Information Collection: Training and Qualification Requirements for Check Airmen and Flight Instructors

**AGENCY:** Federal Aviation Administration (FAA), DOT.

**ACTION:** Notice and request for comments.

**SUMMARY:** In accordance with the Paperwork Reduction Act of 1995, FAA invites public comments about our intention to request the Office of Management and Budget (OMB) approval to renew an information collection. The **Federal Register** Notice with a 60-day comment period soliciting comments on the following collection of information was published on August 12, 2015. The rule allows some experienced pilots who would otherwise qualify as flight instructors or check airmen, but who are not medically eligible to hold the requisite medical certificate, to perform flight instructor or check airmen functions in a simulator.

**DATES:** Written comments should be submitted by November 23, 2015.

**ADDRESSES:** Interested persons are invited to submit written comments on

the proposed information collection to the Office of Information and Regulatory Affairs, Office of Management and Budget. Comments should be addressed to the attention of the Desk Officer, Department of Transportation/FAA, and sent via electronic mail to *oira_submission@omb.eop.gov,* or faxed to (202) 395–6974, or mailed to the Office of Information and Regulatory Affairs, Office of Management and Budget, Docket Library, Room 10102, 725 17th Street NW., Washington, DC 20503.

*Public Comments Invited:* You are asked to comment on any aspect of this information collection, including (a) Whether the proposed collection of information is necessary for FAA's performance; (b) the accuracy of the estimated burden; (c) ways for FAA to enhance the quality, utility and clarity of the information collection; and (d) ways that the burden could be minimized without reducing the quality of the collected information. The agency will summarize and/or include your comments in the request for OMB's clearance of this information collection.

**FOR FURTHER INFORMATION CONTACT:** Ronda Thompson at (202) 267–1416, or by email at: *Ronda.Thompson@faa.gov.*

**SUPPLEMENTARY INFORMATION:**

*OMB Control Number:* 2120–0600.

*Title:* Training and Qualification Requirements for Check Airmen and flight Instructors.

*Form Numbers:* There are no FA forms associated with this collection of information.

*Type of Review:* Renewal of an information collection.

*Background:* The **Federal Register** Notice with a 60-day comment period soliciting comments on the following collection of information was published on August 12, 2015 (80 FR 48391). Federal Aviation Regulations (FAR) Parts 121.411(d), 121.412(d), 135.337(d), and 135.338(d) require the collection of this data. This collection is necessary to insure that instructors and check airmen have completed necessary training and checking required to perform instructor and check airmen functions.

*Respondents:* Approximately 3,000 check airmen and flight instructors.

*Frequency:* Information is collected on occasion.

*Estimated Average Burden per Response:* 15 seconds.

*Estimated Total Annual Burden:* 13 hours.

Issued in Washington, DC, on October 14, 2015.

**Ronda Thompson,**

*FAA Information Collection Clearance Officer, IT Enterprises Business Services Division, ASP–110.*

[FR Doc. 2015–26880 Filed 10–21–15; 8:45 am]

**BILLING CODE 4910–13–P**

---

## DEPARTMENT OF TRANSPORTATION

### Federal Aviation Administration

### Agency Information Collection Activities: Requests for Comments; Clearance of Renewed Approval of Information Collection: Application for Certificate of Waiver or Authorization

**AGENCY:** Federal Aviation Administration (FAA), DOT.

**ACTION:** Notice and request for comments.

**SUMMARY:** In accordance with the Paperwork Reduction Act of 1995, FAA invites public comments about our intention to request the Office of Management and Budget (OMB) approval to renew an information collection. The **Federal Register** Notice with a 60-day comment period soliciting comments on the following collection of information was published on August 12, 2015. The information collected by FAA Form 7711–2, Application for Certificate of Waiver or Authorization, is reviewed and analyzed by FAA to determine the type and extent of the intended deviation from prescribed regulations.

**DATES:** Written comments should be submitted by November 23, 2015.

**ADDRESSES:** Interested persons are invited to submit written comments on the proposed information collection to the Office of Information and Regulatory Affairs, Office of Management and Budget. Comments should be addressed to the attention of the Desk Officer, Department of Transportation/FAA, and sent via electronic mail to *oira_submission@omb.eop.gov,* or faxed to (202) 395–6974, or mailed to the Office of Information and Regulatory Affairs, Office of Management and Budget, Docket Library, Room 10102, 725 17th Street NW., Washington, DC 20503.

*Public Comments Invited:* You are asked to comment on any aspect of this information collection, including (a) Whether the proposed collection of information is necessary for FAA's performance; (b) the accuracy of the estimated burden; (c) ways for FAA to enhance the quality, utility and clarity of the information collection; and (d) ways that the burden could be minimized without reducing the quality of the collected information. The agency will summarize and/or include your comments in the request for OMB's clearance of this information collection.

**FOR FURTHER INFORMATION CONTACT:** Ronda Thompson at (202) 267–1416, or by email at: *Ronda.Thompson@faa.gov.*

**SUPPLEMENTARY INFORMATION:**

*OMB Control Number:* 2120–0027.

*Title:* Application for Certificate of Waiver or Authorization.

*Form Numbers:* FAA Form 7711–2.

*Type of Review:* Renewal of an information collection.

*Background:* The **Federal Register** Notice with a 60-day comment period soliciting comments on the following collection of information was published on August 12, 2015 (80 FR 48389). The information collected by FAA Form 7711–2, Application for Certificate of Waiver or Authorization, is reviewed and analyzed by FAA to determine the type and extent of the intended deviation from prescribed regulations. A certificate of waiver or authorization to deviate is generally issued to the applicant if the proposed operation does not create a hazard to person, property, other aircraft, and includes the operation of unmanned aircraft. Applications for certificates of waiver to the provisions of Parts 91 and 101, for authorization to make parachute jumps (other than emergency or military operations) under Part 105, Section 105.15 (airshows and meets) use FAA Form 7711–2.

*Respondents:* Approximately 21,761 individuals and businesses.

*Frequency:* Information is collected on occasion.

*Estimated Average Burden per Response:* 32 minutes.

*Estimated Total Annual Burden:* 13,761 hours.

Issued in Washington, DC, on October 14, 2015.

**Ronda Thompson,**

*FAA Information Collection Clearance Officer, IT Enterprises Business Services Division, ASP–110.*

[FR Doc. 2015–26883 Filed 10–21–15; 8:45 am]

**BILLING CODE 4910–13–P**

## DEPARTMENT OF TRANSPORTATION

### Federal Aviation Administration

### Notice of Availability for Draft Environmental Assessment (EA) for the Proposed Part 139 Operating Certificate and Related Actions and Notice for Public Hearing at Paulding Northwest Atlanta Airport

**AGENCY:** Federal Aviation Administration (FAA), DOT.

**ACTION:** Notice of availability and notice for public hearing.

**SUMMARY:** The FAA is announcing the availability of a Draft EA for public review and comment. The Draft EA examines the potential environmental impacts of proposed actions to initiate commercial service and to develop the Paulding Northwest Atlanta Airport in accordance with the approved Airport Layout Plan. The EA has been undertaken in accordance with National Environmental Policy Act (NEPA) of 1969 and its implementing regulations. Consultants, acting on behalf of the Paulding County Airport Authority, have prepared a Draft EA that describes the potential environmental impacts associated with the proposed initiation of commercial service and other airport improvement projects on environmental resources in the area.

A Public Hearing for the Draft EA will be held on December 1, 2015 from 6 p.m. to 9 p.m. at the Paulding County Northwest Atlanta Airport, 730 Airport Parkway, Dallas, Georgia 30157.

**DATES:** The document will be available for public review beginning on October 20, 2015. Comments on the document will be accepted until December 11, 2015.

**ADDRESSES:** Any person desiring to review the Draft EA and to comment on the document may do so at the following locations: Paulding Northwest Atlanta Airport, 730 Airport Parkway, Dallas, Georgia 30157 or Paulding County Library, 1010 Memorial Drive East, Dallas, Georgia 30132.

**FOR FURTHER INFORMATION CONTACT:** Lisa Favors, Environmental Program Manager, Atlanta Airports District Office, 1701 Columbia Ave., Suite 220, Atlanta, GA 30337–2747, (404) 305–6744, *Lisa.Favors@faa.gov.*

**SUPPLEMENTARY INFORMATION:** The Draft EA will also be made available online for review and comment via the following Web sites:

*Paulding Northwest Atlanta Airport: www.pauldingairport.com*
*Paulding County, Georgia: www.paulding.gov*

Issued in Atlanta, Georgia, on October 15, 2015.

**Larry F. Clark,**

*Manager, Atlanta Airports District Office, Southern Region.*

[FR Doc. 2015–26869 Filed 10–21–15; 8:45 am]

BILLING CODE 4910–13–P

## DEPARTMENT OF TRANSPORTATION

### Federal Aviation Administration

### Fifth Meeting: RTCA Special Committee (232) Airborne Selective Calling Equipment

**AGENCY:** Federal Aviation Administration (FAA), U.S. Department of Transportation (DOT).

**ACTION:** Notice of Fifth RTCA Special Committee 232 Meeting.

**SUMMARY:** The FAA is issuing this notice to advise the public of the Fifth RTCA Special Committee 232 meeting.

**DATES:** The meeting will be held November 10th–11th from 9:00 a.m.–5:00 p.m.

**ADDRESSES:** The meeting will be held at RTCA, Inc., 1150 18th Street NW., Suite 910, Washington, DC 20036, Tel: (202) 330–0654.

**FOR FURTHER INFORMATION CONTACT:** The RTCA Secretariat, 1150 18th Street NW., Suite 910, Washington, DC 20036, or by telephone at (202) 833–9339, fax at (202) 833–9434, or Web site at *http://www.rtca.org* or Hal Moses, Program Director, RTCA, Inc., *hmoses@rtca.org,* (202) 330–0654.

**SUPPLEMENTARY INFORMATION:** Pursuant to section 10(a)(2) of the Federal Advisory Committee Act (Pub. L. 92–463, 5 U.S.C., App.), notice is hereby given for a meeting of RTCA Special Committee 232. The agenda will include the following:

**Tuesday-Wednesday, November 10–11, 2015**

1. Welcome/Introductions/Administrative Remarks
2. Agenda Overview
3. Review/Approval of Minutes from Plenary #4
4. Status of Other SELCAL Industry Activities/Committees
5. Review of Selective Calling (SELCAL) Action Items
6. Review SC–232 Completion Schedule
7. Review of Draft MOPS
8. Continue and Complete Drafting MOPS
9. Other Business
10. Date and Place of Next Meetings
11. Adjourn

Attendance is open to the interested public but limited to space availability. With the approval of the chairman, members of the public may present oral statements at the meeting. Plenary information will be provided upon request. Persons wishing to present statements or obtain information should contact the person listed in the **FOR FURTHER INFORMATION CONTACT** section. Members of the public may present a written statement to the committee at any time.

Issued in Washington, DC, on October 16, 2015.

**Latasha Robinson,**

*Management & Program Analyst, Next Generation, Enterprise Support Services Division, Federal Aviation Administration.*

[FR Doc. 2015–26863 Filed 10–21–15; 8:45 am]

BILLING CODE 4910–13–P

## DEPARTMENT OF TRANSPORTATION

### Federal Aviation Administration

### Notice of Approval of Finding of No Significant Impact/Record of Decision (FONSI/ROD) for the Proposed Replacement Airport (XWA) Serving D–III Aircraft in Williston, North Dakota

**AGENCY:** Federal Aviation Administration (FAA), DOT.

**ACTION:** Notice.

**SUMMARY:** The FAA is announcing approval of Finding of No Significant Impact/Record of Decision for the proposed replacement airport (XWA) serving D–III aircraft in Williston, North Dakota. The FAA approved the FONSI/ROD on September 22, 2015.

**SUPPLEMENTARY INFORMATION:** The FONSI approved the Sponsor's proposed action to develop aviation facilities that meet FAA airport design standards and accommodate current and projected levels of aviation activity for the Williston area. The need for the proposed action is to provide aviation facilities necessary to meet the expected demand for the forecasted growth of air traffic in Williston area consistent with FAA airport design standards for ARC D–III aircraft, as well as provide the capability for anticipated future operation of larger aircraft.

The City of Williston proposes to decommission the existing Sloulin Field International Airport (ISN) and construct, operate and maintain a new airport located in Williston, North Dakota. The Airport will be relocated approximately 6 miles north and 5 miles west of Williston. The proposed new terminal building would be located approximately 2.5 miles from US Highway 2. The proposed new airport would be called the Williston Basin

International Airport and the airport identifier changed to (XWA).

The City of Williston proposes to relocate the Sloulin Field International Airport to develop aviation facilities that meet FAA airport design standards and accommodated current and projected levels of aviation activity. They propose to construct two runways and related aviation facilities that meet FAA airport design standards for Airport Reference Code (ARC) D–III aircraft as well as acquire land for compatible land use and expansion of facilities to future aviation demands. Development of a replacement airport requires FAA approval of an airport layout plan (ALP), the final EA and FONSI/ROD and approval of funding from local agencies, North Dakota Aeronautics Commission (NDAC), and the FAA. The proposed action would require the acquisition of land for the construction of access roads, construction of runways, taxiways, aprons and various airport structures, and the installation of navigational aids to meet FAA design standards for ARC D–III aircraft. The proposed action includes acquisition of land for compatible land use, construction of facilities, and the closure and sale of the existing Sloulin Field International Airport. The relocated airport is anticipated to be constructed from 2015–2018, pending funding availability.

The FONSI/ROD indicates the project is consistent with existing environmental policies and objectives as set forth in the National Environmental Policy Act (NEPA) of 1969, as amended and will not significantly affect the quality of the environment.

In reaching this decision, the FAA has given careful consideration to: (a) The role of Williston Airport plays in the national air transportation system, (b) aviation safety, and (c) preferences of the airport owner/operator, and (d) anticipated environmental impact.

**DATES:** This notice is effective October 22, 2015.

**FOR FURTHER INFORMATION CONTACT:** Ms. Lindsay Butler, Federal Aviation Administration, Great Lakes Regional Office, 2300 East Devon Avenue, Des Plaines, IL 60018. Telephone number: 847–294–7723.

Issued in Des Plaines, IL, on September 30, 2015.

**Richard M. Kula,**

*Manager, Planning/Programming Branch, FAA Great Lakes Region.*

[FR Doc. 2015–26879 Filed 10–21–15; 8:45 am]

**BILLING CODE 4910–13–P**

## DEPARTMENT OF TRANSPORTATION

### Federal Aviation Administration

### Ninth Meeting: RTCA Special Committee (228) Minimum Operational Performance Standards for Unmanned Aircraft Systems

**AGENCY:** Federal Aviation Administration (FAA), U.S. Department of Transportation (DOT).

**ACTION:** Notice of Ninth RTCA Special Committee 228 Meeting.

**SUMMARY:** The FAA is issuing this notice to advise the public of the Ninth RTCA Special Committee 228 meeting.

**DATES:** The meeting will be held November 20th from 9:00 a.m.–1:00 p.m.

**ADDRESSES:** The meeting will be held at NASA Ames Center, Building 152, 200 Dailey Road, Moffett Field, CA 94035, Tel: (202) 330–0654.

**FOR FURTHER INFORMATION CONTACT:** The RTCA Secretariat, 1150 18th Street NW., Suite 910, Washington, DC 20036, or by telephone at (202) 833–9339, fax at (202) 833–9434, or Web site at *http://www.rtca.org* or Hal Moses, Program Director, RTCA, Inc., *hmoses@rtca.org,* (202) 330–0654.

**SUPPLEMENTARY INFORMATION:** Pursuant to section 10(a)(2) of the Federal Advisory Committee Act (Pub. L. 92–463, 5 U.S.C., App.), notice is hereby given for a meeting of RTCA Special Committee 228. The agenda will include the following:

**Monday, November 16, 2015 (Specific Working Group Sessions Before the Plenary)**

1. Afternoon—1:00–5:00 p.m. Working Group 1—DAA
2. All Day, Working Group 2—C2

**Tuesday–Thursday, November 17–19, 2015 (Specific Working Group Sessions Before the Plenary)**

1. All Day, Working Group 1—DAA
2. Separate Break-out rooms for subgroups as required
3. All Day, Working Group 2—C2

**Friday, November 20, 2015**

1. Welcome/Introductions/Administrative Remarks/SC–228 Participation Guidelines
   a. Reading of the Public Announcement by the DFO
   b. Reading of the RTCA Proprietary References Policy
2. Agenda Overview
3. Review/Approval of Minutes from Plenary #8 (RTCA Paper No. 132–15/SC228–21) held Friday, May 22, 2015 at RTCA
4. Review of RTCA SC–228 Steering Committee Activity
   a. Phase Two SC–228 Terms of Reference Development Team
5. Report from EUROCAE WG–73
6. Report from WG–1, Detect and Avoid
7. Report from WG–2, Command and Control
8. Action Item Review
9. Other Business
10. Date, Place and Time of Next Meeting(s)
11. Adjourn Plenary

Attendance is open to the interested public but limited to space availability. With the approval of the chairman, members of the public may present oral statements at the meeting. Plenary information will be provided upon request. Persons wishing to present statements or obtain information should contact the person listed in the **FOR FURTHER INFORMATION CONTACT** section. Members of the public may present a written statement to the committee at any time.

Issued in Washington, DC, on October 16, 2015.

**Latasha Robinson,**

*Management & Program Analyst, Next Generation, Enterprise Support Services Division, Federal Aviation Administration.*

[FR Doc. 2015–26861 Filed 10–21–15; 8:45 am]

**BILLING CODE 4910–13–P**

## DEPARTMENT OF TRANSPORTATION

### Federal Aviation Administration

### Agency Information Collection Activities: Requests for Comments; Clearance of Renewed Approval of Information Collection: Suspected Unapproved Parts Notification

**AGENCY:** Federal Aviation Administration (FAA), DOT.

**ACTION:** Notice and request for comments.

**SUMMARY:** In accordance with the Paperwork Reduction Act of 1995, FAA invites public comments about our intention to request the Office of Management and Budget (OMB) approval to renew an information collection. The information collected on the FAA Form 8120–11 is reported voluntarily by manufacturers, repair stations, aircraft owner/operators, air carriers, and the general public who wish to report suspected unapproved parts to the FAA for review. The report information is collected and correlated by the FAA, Aviation Safety Hotline Program Office, and used to determine if an unapproved part investigation is warranted.

**DATES:** Written comments should be submitted by December 21, 2015.

**ADDRESSES:** Send comments to the FAA at the following address: Ronda Thompson, Room 300, Federal Aviation Administration, ASP–110, 950 L'Enfant Plaza SW., Washington, DC 20024.

*Public Comments Invited:* You are asked to comment on any aspect of this information collection, including (a) Whether the proposed collection of information is necessary for FAA's performance; (b) the accuracy of the estimated burden; (c) ways for FAA to enhance the quality, utility and clarity of the information collection; and (d) ways that the burden could be minimized without reducing the quality of the collected information. The agency will summarize and/or include your comments in the request for OMB's clearance of this information collection.

**FOR FURTHER INFORMATION CONTACT:** Ronda Thompson at (202) 267–1416, or by email at: *Ronda.Thompson@faa.gov.*

**SUPPLEMENTARY INFORMATION:**

*OMB Control Number:* 2120–0552.

*Title:* Suspected Unapproved Parts Notification.

*Form Numbers:* FAA Form 8120–11.

*Type of Review:* Renewal of an information collection.

*Background:* The information collected on the FAA Form 8120–11 is reported voluntarily by manufacturers, repair stations, aircraft owner/operators, air carriers, and the general public who wish to report suspected unapproved parts to the FAA for review. The report information is collected and correlated by the FAA, Aviation Safety Hotline Program Office, and used to determine if an unapproved part investigation is warranted. When unapproved parts are confirmed that are likely to exist on other products or aircraft of the same or similar design or are being used in other facilities, the information is used as a basis for an aviation industry alert or notification. Alerts are used to inform industry of situations essential to the prevention of accidents, if the information had not been collected. The consequence to the aviation community would be the inability to determine whether or not unapproved parts are being offered for sale or use for installation on type-certificated products.

*Respondents:* Approximately 150 manufactures, repair stations, aircraft owners/operators, and air carriers.

*Frequency:* Information is collected on occasion.

*Estimated Average Burden per Response:* 30 minutes.

*Estimated Total Annual Burden:* 75 hours.

Issued in Washington, DC, on October 14, 2015.

**Ronda Thompson,**

*FAA Information Collection Clearance Officer, IT Enterprises Business Services Division, ASP–110.*

[FR Doc. 2015–26881 Filed 10–21–15; 8:45 am]

BILLING CODE 4910–13–P

## DEPARTMENT OF TRANSPORTATION

### Federal Aviation Administration

### Agency Information Collection Activities: Requests for Comments; Clearance of Renewed Approval of Information Collection: Hazardous Materials Training Requirements

**AGENCY:** Federal Aviation Administration (FAA), DOT.

**ACTION:** Notice and request for comments.

**SUMMARY:** In accordance with the Paperwork Reduction Act of 1995, FAA invites public comments about our intention to request the Office of Management and Budget (OMB) approval to renew an information collection. The **Federal Register** Notice with a 60-day comment period soliciting comments on the following collection of information was published on August 12, 2015. This collection involves requirements for certain repair stations to provide documentation showing that persons handling hazmat for transportation have been trained following DOT guidelines.

**DATES:** Written comments should be submitted by November 23, 2015.

**ADDRESSES:** Interested persons are invited to submit written comments on the proposed information collection to the Office of Information and Regulatory Affairs, Office of Management and Budget. Comments should be addressed to the attention of the Desk Officer, Department of Transportation/FAA, and sent via electronic mail to *oira_submission@omb.eop.gov,* or faxed to (202) 395–6974, or mailed to the Office of Information and Regulatory Affairs, Office of Management and Budget, Docket Library, Room 10102, 725 17th Street NW., Washington, DC 20503.

*Public Comments Invited:* You are asked to comment on any aspect of this information collection, including (a) Whether the proposed collection of information is necessary for FAA's performance; (b) the accuracy of the estimated burden; (c) ways for FAA to enhance the quality, utility and clarity of the information collection; and (d) ways that the burden could be minimized without reducing the quality of the collected information. The agency will summarize and/or include your comments in the request for OMB's clearance of this information collection.

**FOR FURTHER INFORMATION CONTACT:** Ronda Thompson at (202) 267–1416, or by email at: *Ronda.Thompson@faa.gov.*

**SUPPLEMENTARY INFORMATION:**

*OMB Control Number:* 2120–0705.

*Title:* Hazardous Materials Training Program.

*Form Numbers:* There are no FAA forms associated with this collection of information.

*Type of Review:* Renewal of an information collection.

*Background:* The **Federal Register** Notice with a 60-day comment period soliciting comments on the following collection of information was published on August 12, 2015 (80 FR 48391). The FAA, as prescribed in 14 CFR parts 121 and 135, requires certificate holders to submit manuals and hazmat training programs, or revisions to an approved hazmat training program to obtain initial and final approval as part of the FAA certification process. Original certification is completed in accordance with 14 CFR part 119. Continuing certification is completed in accordance with part 121 and part 135. The FAA uses the approval process to determine compliance of the hazmat training programs with the applicable regulations, national policies and safe operating practices. The FAA must ensure that the documents adequately establish safe operating procedures.

*Respondents:* Approximately 2,772 operators.

*Frequency:* Information is collected on occasion.

*Estimated Average Burden per Response:* 7 hours.

*Estimated Total Annual Burden:* 6,900 hours.

Issued in Washington, DC on October 14, 2015.

**Ronda Thompson,**

*FAA Information Collection Clearance Officer, IT Enterprises Business Services Division, ASP–110.*

[FR Doc. 2015–26882 Filed 10–21–15; 8:45 am]

BILLING CODE 4910–13–P

## DEPARTMENT OF TRANSPORTATION

### National Highway Traffic Safety Administration

**[Docket No. NHTSA–2015–0054; Notice 2]**

### Mack Trucks, Inc., Grant of Petition for Decision of Inconsequential Noncompliance

**AGENCY:** National Highway Traffic Safety Administration (NHTSA), Department of Transportation (DOT).

**ACTION:** Grant of petition.

**SUMMARY:** Mack Trucks, Inc. (Mack), has determined that certain model year (MY) 2014–2016 Mack LEU model incomplete vehicles do not fully comply with paragraphs S5.3.3 and S5.3.4 of Federal Motor Vehicle Safety Standard (FMVSS) No. 121, *Air Brake Systems.* Mack has filed an appropriate report dated April 27, 2015, pursuant to 49 CFR part 573, *Defect and Noncompliance Responsibility and Reports.*

**ADDRESSES:** For further information on this decision contact James Jones, Office of Vehicle Safety Compliance, the National Highway Traffic Safety Administration (NHTSA), telephone (202) 366–5294, facsimile (202) 366–3081.

**SUPPLEMENTARY INFORMATION:**

I. *Overview:* Pursuant to 49 U.S.C. 30118(d) and 30120(h) (see implementing rule at 49 CFR part 556), Mack submitted a petition for an exemption from the notification and remedy requirements of 49 U.S.C. Chapter 301 on the basis that this noncompliance is inconsequential to motor vehicle safety. After reviewing the petition, NHTSA requested additional information from Mack by letter dated July 9, 2015. In response to that letter, Mack provided supplemental information by letter dated July 17, 2015. Copies of NHTSA's request and Mack's response are available from the petition docket.

Notice of receipt of the petition was published, with a 30-day public comment period, on August 18, 2015 in the **Federal Register** (80 FR 50069). No comments were received. To view the petition and supporting documentation log onto the Federal Docket Management System (FDMS) Web site at: *http://www.regulations.gov/.* Then follow the online search instructions to locate docket number ''NHTSA–2015–0054.''

II. *Vehicles Involved:* Affected are approximately 1,977 MY 2014–2016 Mack LEU model incomplete vehicles manufactured between July 22, 2013 and April 20, 2015.

III. *Noncompliance:* Mack explains that the noncompliance is that the brake actuation and release times slightly (by milliseconds) exceed the requirements as specified in paragraphs S5.3.3 and S5.3.4 of FMVSS No. 121.

IV. *Rule Text:* Paragraph S5.3.3 of FMVSS No. 121 requires in pertinent part:

S5.3.3 *Brake Actuation time.* Each service brake system shall meet the requirements of S5.3.3.1(a) and (b) . . .

S5.3.3.1(a) With an initial service reservoir system air pressure of 100 psi, the air pressure in each brake chamber shall, when measured from the first movement of the service brake control, reach 60 psi in not more than 0.45 second in the case of trucks and buses, . . .

Paragraph S5.3.4 of FMVSS No. 121 requires in pertinent part:

S5.3.4 *Brake Release time.* Each service brake system shall meet the requirements of S5.3.4.1(a) and (b) . . .

S5.3.4.1(a) With an initial service brake chamber air pressure of 95 psi, the air pressure in each brake chamber shall, when measured from the first movements of the service brake control, fall to 5 psi in not more than 0.55 second in the case of trucks and buses, . . .

V. *Summary of Mack's Arguments:* Mack stated its belief that the subject noncompliance is inconsequential to motor vehicle safety for the following reasons:

(A) Mack conducted pneumatic brake timings tests on a test vehicle representative of the affected population to show the results compared to the requirement. The test vehicle was configured similar to a dual-drive (or twin steer) residential garbage truck equipped with left-hand and right-hand steering and brake controls. Tests were conducted on each axle, separately, using the left-hand brake control and then, the right hand brake control.

Mack's data indicate that, on average, steer axle pneumatic brake actuation times exceed the requirement by 0.04 seconds, steer axle pneumatic brake release times, on average, exceed the requirement by 0.09 seconds, and drive axle brake timing results indicate compliance with the safety standard's requirement.

Mack stated that a change in brake chamber size from type 24 to type 30, which occurred in 2013 production, may have caused the noncompliance.

(B) Mack conducted additional brake timing and dynamic performance tests to evaluate how this noncompliance affects overall brake performance. The tests were performed by an independent testing and evaluation company, Link Commercial Vehicle Testing (Link) located in East Liberty, Ohio. According to Mack, the results of these tests clearly show that the trucks that are affected by the subject noncompliance are compliant with the brake stopping distance requirements. Mack provided a chart to illustrate the stopping distance test results. (Detailed results from the tests provided by Mack are available from the docket for this petition).

(C) Mack stated that LEU's are used almost exclusively in residential garbage collection service. Because of that, Mack says there are no concerned vehicles that tow air-braked trailers and that compatibility with other air brake vehicles is also not cause for concern.

(D) Mack also stated that brake release timing has been the subject of previous petitions that it believes are similar to its petition and were granted by NHTSA.

Mack has additionally informed NHTSA that it is correcting the noncompliance so that all future production of the subject trucks will fully comply with FMVSS No. 121.

In summation, Mack believes that the described noncompliance of the subject trucks is inconsequential to motor vehicle safety, and that its petition, to exempt Mack from providing recall notification of noncompliance as required by 49 U.S.C. 30118 and remedying the recall noncompliance as required by 49 U.S.C. 30120 should be granted.

**NHTSA'S Decision**

*NHTSA's Analysis of Mack's Arguments:* According to Mack, the results of the tests conducted by Link clearly show that the trucks that are affected by the subject noncompliance are compliant with the brake stopping distance requirements. We agree.

Link performed a series of FMVSS No. 121 stopping distance and stability and control tests on a Mack LEU dual-drive test vehicle, initially, fitted with type 24 steer axle brake chambers to represent the ''compliant configuration'' and then fitted with type 30 steer axle brake chambers to represent the ''noncompliant configuration [1].''

With the test vehicle loaded to gross vehicle weight [2], Link conducted stopping distance tests at 9 different target speeds, ranging from 20 mph to

[1] Link also performed Performance Based Brake Tests (PBBT) prior to and after the burnish to verify system and ABS functionality.

[2] The Mack LEU dual-drive test vehicle was an incomplete chassis cab without a garbage container body installed. Link affixed a roll bar and load frame to the chassis frame rails to ensure the safety of the driver during testing and to allow ballast to be added to the test vehicle to simulate a loaded garbage truck.

60 mph in 5 mph increments (*i.e.,* 20, 25, 30, 35, 40, 45, 50, 55, 60 mph). Link conducted the tests, generally following NHTSA test protocols.

The data results indicate that the test vehicle in the ''noncompliant'' configuration met the safety standard's stopping distance requirements. Furthermore, the data results show that there is no significant difference in stopping distance performance between the two configurations. Additionally, Link performed stability and control (*i.e.,* Braking-in-a-Curve) tests with the vehicle unloaded (unladen) representing worst case. Link conducted these tests, generally following NHTSA test protocols except that these tests were more severe than compliance tests because they were conducted at test speeds approximately 10% higher at 30 mph given a maximum drive speed of 36 mph.[3]

Again, data results indicate that the test vehicle in the ''noncompliant'' configuration met the safety standard's stability and control braking requirements and there is no significant difference in braking performance between the two configurations.

Mack also stated that brake release timing has been the subject of previous petitions that it believes are similar to its petition and were granted by NHTSA.

In previous petitions concerning brake release timing, NHTSA emphasized that only the failure of the subject vehicles was at issue. NHTSA concluded that, ''*the test data results and analyses were sufficient to grant the petition for the specific conditions that cause the subject vehicles to be out of compliance with the standard's pneumatic release time requirement.''*[emphasis added] (see 77 FR 20482)

Likewise, for this petition, we only consider the failure of the subject vehicles and whether the data and analyses are sufficient to grant the petition.

*NHTSA's Decision:* NHTSA has concluded that the braking performance of subject noncompliant vehicles is not adversely affected as a result of slightly longer pneumatic brake actuation and release times. The dynamic performance data provided by the petitioner indicate no difference in stopping distance performance for noncompliant vehicles when compared to compliant vehicles. The data confirm that stopping distances of noncompliant vehicles conform to the safety standard's performance requirements. Therefore, the subject noncompliant vehicles do not appear to pose an undue safety risk in braking performance in comparison to compliant vehicles.

The petitioner has met its burden of persuasion that the noncompliance described herein is inconsequential to safety. The petition is hereby granted. Accordingly, Mack is exempted from the obligation of providing notification of, and remedy for the subject noncompliance.

NHTSA notes that the statutory provisions (49 U.S.C. 30118(d) and 30120(h)) that permit manufacturers to file petitions for a determination of inconsequentiality allow NHTSA to exempt manufacturers only from the duties found in sections 30118 and 30120, respectively, to notify owners, purchasers, and dealers of a defect or noncompliance and to remedy the defect or noncompliance. Therefore, this decision only applies to the subject incomplete vehicles that Mack no longer controlled at the time it determined that the noncompliance existed. However, the grant of this petition does not relieve equipment distributors and dealers of the prohibitions on the sale, offer for sale, or introduction or delivery for introduction into interstate commerce of the noncompliant incomplete vehicles under their control after Mack notified them that the subject noncompliance existed.

**Authority:** (49 U.S.C. 30118, 30120: delegations of authority at 49 CFR 1.95 and 501.8)

**Jeffrey M. Giuseppe,**

*Director, Office of Vehicle Safety Compliance.*

[FR Doc. 2015–26803 Filed 10–21–15; 8:45 am]

BILLING CODE 4910–59–P

[3] In the test report, Link indicated that the test vehicle achieved a maximum drive through speed of 36 mph. Per FMVSS No. 121, S5.3.6.1, the test speed is calculated as 75% of the maximum drive through speed which computes to 27 mph.

## DEPARTMENT OF TRANSPORTATION

### National Highway Traffic Safety Administration

**[Docket No. NHTSA–2015–0091; Notice 1]**

### Cooper Tire & Rubber Company, Receipt of Petition for Decision of Inconsequential Noncompliance

**AGENCY:** National Highway Traffic Safety Administration (NHTSA), Department of Transportation (DOT).

**ACTION:** Receipt of petition.

**SUMMARY:** Cooper Tire & Rubber Company (Cooper), has determined that certain Cooper tires do not fully comply with paragraph S5.5.1(b) of Federal Motor Vehicle Safety Standard (FMVSS) No. 139, *New Pneumatic Tires Radial Tires for Light Vehicles.* Cooper has filed an appropriate report dated August 13, 2015, pursuant to 49 CFR part 573, *Defect and Noncompliance Responsibility and Reports.*

**DATES:** The closing date for comments on the petition is November 23, 2015.

**ADDRESSES:** Interested persons are invited to submit written data, views, and arguments on this petition. Comments must refer to the docket and notice number cited at the beginning of this notice and submitted by any of the following methods:

- *Mail:* Send comments by mail addressed to: U.S. Department of Transportation, Docket Operations, M–30, West Building Ground Floor, Room W12–140, 1200 New Jersey Avenue SE, Washington, DC 20590.
- *Hand Deliver:* Deliver comments by hand to: U.S. Department of Transportation, Docket Operations, M–30, West Building Ground Floor, Room W12–140, 1200 New Jersey Avenue SE, Washington, DC 20590. The Docket Section is open on weekdays from 10 a.m. to 5 p.m. except Federal Holidays.
- *Electronically:* Submit comments electronically by: logging onto the Federal Docket Management System (FDMS) Web site at *http://www.regulations.gov/.* Follow the online instructions for submitting comments. Comments may also be faxed to (202) 493–2251.

Comments must be written in the English language, and be no greater than 15 pages in length, although there is no limit to the length of necessary attachments to the comments. If comments are submitted in hard copy form, please ensure that two copies are provided. If you wish to receive confirmation that your comments were received, please enclose a stamped, self-addressed postcard with the comments. Note that all comments received will be posted without change to *http://www.regulations.gov,* including any personal information provided.

Documents submitted to a docket may be viewed by anyone at the address and times given above. The documents may also be viewed on the Internet at *http://www.regulations.gov* by following the online instructions for accessing the dockets. DOT's complete Privacy Act Statement is available for review in the **Federal Register** published on April 11, 2000, (65 FR 19477–78).

The petition, supporting materials, and all comments received before the close of business on the closing date indicated above will be filed and will be considered. All comments and supporting materials received after the closing date will also be filed and will

be considered to the extent possible. When the petition is granted or denied, notice of the decision will be published in the **Federal Register** pursuant to the authority indicated below.

**SUPPLEMENTARY INFORMATION:** *I. Overview:* Pursuant to 49 U.S.C. 30118(d) and 30120(h) (see implementing rule at 49 CFR part 556), Cooper submitted a petition for an exemption from the notification and remedy requirements of 49 U.S.C. Chapter 301 on the basis that this noncompliance is inconsequential to motor vehicle safety.

This notice of receipt of Cooper's petition is published under 49 U.S.C. 30118 and 30120 and does not represent any agency decision or other exercise of judgment concerning the merits of the petition.

*II. Tires Involved:* Affected are approximately 1,350 Cooper Weather-Master S/T2 size 215/70R15 tires manufactured between April 26, 2015 and May 29, 2015.

*III. Noncompliance:* Cooper explains that the noncompliance is that the inboard sidewalls of the subject tires are labeled with an incorrect manufacturer's identification mark and therefore do not fully meet all applicable requirements of paragraph S5.5.1(b) of FMVSS No. 139. Specifically, the tires are labeled with manufacturer's identification mark ''U8'' instead of ''U9.''

*IV. Rule Text:* Paragraph S5.5.1 of FMVSS No. 139 requires in pertinent part:

S5.5.1 *Tire Identification Number.*

* * * * *

(b) *Tires manufactured on or after September 1, 2009.* Each tire must be labeled with the tire identification number required by 49 CFR part 574 on the intended outboard sidewall of the tire. Except for retreaded tires, either the tire identification number or a partial tire identification number, containing all characters in the tire identification number, except for the date code and, at the discretion of the manufacturer, any optional code, must be labeled on the other sidewall of the tire. Except for retreaded tires, if a tire does not have an intended outboard sidewall, the tire must be labeled with the tire identification number required by 49 CFR part 574 on one sidewall and with either the tire identification number or a partial tire identification number, containing all characters in the tire identification number except for the date code and, at the discretion of the manufacturer, any optional code, on the other side wall.

*V. Summary of Cooper's Petition:* Cooper states its belief that the subject noncompliance is inconsequential to motor vehicle safety because while the subject tires contain an incorrect manufacturer's identification mark on the inboard sidewall, the full and correct tire code (including the correct manufacturer's identification mark) is available on the intended outboard sidewall. In addition, Cooper stated that the tires are marked with the Cooper Weather-Master S/T2 brand name that is exclusively owned by Cooper Tire & Rubber Company.

Cooper also indicated that it has taken the following steps to ensure proper registration of the subject tires:

(a) Cooper has informed all internal personnel responsible for manual processing of tire registration cards about the ''U8'' issue so that cards containing the ''U8'' designation will be accepted and properly processed when all other information accurately identifies the subject tires. And, Cooper will follow up with the consumer seeking additional information by providing a prepaid response card.

(b) Cooper is in the process of modifying its database to accept ''U8'' when other information (brand, serial weeks affected etc.) is accurate.

(c) Cooper has contacted Computerized Information and Management Services, Inc. (CIMS) so that tire registration cards will not be rejected solely due to improper plant code information.

Cooper additionally informed NHTSA that on May 29, 2015 the incorrect mold was pulled and the stamping error that caused the subject noncompliance was corrected at that time.

Refer to Coopers' petition for their complete reasoning and any associated illustrations. The petition and all supporting documents are available by logging onto the Federal Docket Management System (FDMS) Web site at: *http://www.regulations.gov/* and following the online search instructions to locate the docket number listed in the title of this notice.

In summation, Cooper believes that the described noncompliance of the subject tires is inconsequential to motor vehicle safety, and that its petition, to exempt Cooper from providing recall notification of noncompliance as required by 49 U.S.C. 30118 and remedying the recall noncompliance as required by 49 U.S.C. 30120 should be granted.

NHTSA notes that the statutory provisions (49 U.S.C. 30118(d) and 30120(h)) that permit manufacturers to file petitions for a determination of inconsequentiality allow NHTSA to exempt manufacturers only from the duties found in sections 30118 and 30120, respectively, to notify owners, purchasers, and dealers of a defect or noncompliance and to remedy the defect or noncompliance. Therefore, any decision on this petition only applies to the subject tires that Cooper no longer controlled at the time it determined that the noncompliance existed. However, any decision on this petition does not relieve equipment distributors and dealers of the prohibitions on the sale, offer for sale, or introduction or delivery for introduction into interstate commerce of the noncompliant tires under their control after Cooper notified them that the subject noncompliance existed.

**Authority:** (49 U.S.C. 30118, 30120: delegations of authority at 49 CFR 1.95 and 501.8)

**Jeffrey Giuseppe,**

*Director, Office of Vehicle Safety Compliance.*

[FR Doc. 2015–26804 Filed 10–21–15; 8:45 am]

**BILLING CODE 4910–59–P**

## DEPARTMENT OF TRANSPORTATION

### National Highway Traffic Safety Administration

**[Docket No. NHTSA–2013–0144; Notice 2]**

### Ford Motor Company, Grant of Petition for Decision of Inconsequential Noncompliance

**AGENCY:** National Highway Traffic Safety Administration (NHTSA), Department of Transportation (DOT).

**ACTION:** Grant of petition.

**SUMMARY:** Ford Motor Company, (Ford) has determined that certain model year (MY) 2014 Ford Focus passenger cars do not fully comply with paragraph S3.1.4.1(a) of Federal Motor Vehicle Safety Standard (FMVSS) No. 102, *Transmission Shift Position Sequence, Starter Interlock, and Transmission Braking Effect.* Ford has filed an appropriate report dated November 25, 2013 pursuant to 49 CFR part 573, *Defect and Noncompliance Responsibility and Reports.*

**ADDRESSES:** For further information on this decision contact Amina Fisher, Office of Vehicle Safety Compliance, National Highway Traffic Safety Administration (NHTSA), telephone (202) 366–5307, facsimile (202) 366–5930.

**SUPPLEMENTARY INFORMATION:** I. *Ford's Petition:* Pursuant to 49 U.S.C. 30118(d) and 30120(h) (see implementing rule at 49 CFR part 556), Ford submitted a petition for an exemption from the notification and remedy requirements of 49 U.S.C. Chapter 301 on the basis that this noncompliance is inconsequential to motor vehicle safety.

Notice of receipt of Ford's petition was published, with a 30-Day public comment period, on June 19, 2014 in

the **Federal Register** (79 FR 35226). No comments were received. To view the petition and all supporting documents log onto the Federal Docket Management System (FDMS) Web site at: *http://www.regulations.gov/.* Then follow the online search instructions to locate docket number ''NHTSA–2013–0144.''

II. *Vehicles Involved:* Affected are approximately 43,699 MY 2014 Ford Focus passenger cars manufactured from August 2, 2013 through September 27, 2013, at Ford's Michigan Assembly Plant in Wayne, Michigan.

III. *Noncompliance:* Ford explains that the noncompliance is that the subject vehicles do not fully meet the requirements of paragraph S3.1.4.1(a) of FMVSS No. 102 because after a vehicle's ignition has been switched on, the transmission shift position indicator (PRNDx) does not display transmission shift position sequence and position, *i.e.,* Park, until after the shifter release button is depressed under certain non-typical conditions.

IV. *Rule Text:* Paragraph S3.1.4.1 of FMVSS No. 102 requires in pertinent part:

S3.1.4.1 Except as specified in S3.1.4.3, if the transmission shift position sequence includes a park position, identification of shift positions, including the positions in relation to each other and the position selected, shall be displayed in view of the driver whenever any of the following exist:

(a) The ignition is in a position where the transmission can be shifted; or . . .

## V. Summary of Ford's Analyses

Ford explained that this condition can only occur after a non-typical key-on sequence and only when the transmission is in park, and believes that this condition does not present a risk to motor vehicle safety. The following two examples were presented:

*Example 1:* After the cluster enters sleep mode, if an operator, without first opening the door, inserts a key and turns on the ignition from outside the vehicle (*e.g.,* through an open window) and later enters the vehicle, the PRNDx will not be illuminated until the shift lever button is depressed.

*Example 2:* After shutting down a vehicle with the transmission in Park, the driver remains in the vehicle for approximately 10 minutes with the key out of the ignition, and does not contact the brake pedal or open a door, the cluster will go into sleep mode. If the driver then starts the engine in 0.7 seconds or less of performing an action that causes the cluster to wake-up (*e.g.,* touching the brake pedal) the PRNDx will not be illuminated until the shift lever button is depressed.

Ford said that as soon as the transmission shift lever release button is depressed (required for shifting to any non-park position) the PRNDx will illuminate, allowing the customer to select the desired gear.

Ford also mentioned that under normal usage the PRNDx illuminates as intended. As an example, Ford explained that when the driver or passenger opens a door and enters the car, the cluster will wake-up from sleep mode and the subject condition will not occur.

Furthermore, Ford explained that if the vehicle is left in any gear other than park, the cluster will not go into sleep mode, this subject noncompliant condition will not occur, and the PRNDx will illuminate as intended.

Lastly, Ford stated that no other Ford vehicles are affected by this condition and Ford is not aware of any owner complaints, accidents or injuries related to this condition.

Ford has additionally informed NHTSA that it has corrected the noncompliance so that all future production vehicles will comply with FMVSS No. 102.

In summation, Ford believes that the described noncompliance of the subject vehicles is inconsequential to motor vehicle safety, and that its petition, to exempt Ford from providing recall notification of noncompliance as required by 49 U.S.C. 30118 and remedying the recall noncompliance as required by 49 U.S.C. 30120 should be granted.

## NHTSA Decision

*NHTSA Analysis:* NHTSA has reviewed Ford's justification for an inconsequential noncompliance determination and agree that the subject noncompliance is inconsequential to motor vehicle safety.

Ford stated that the subject condition can only occur after certain non-typical key-on sequences and only when the transmission is in park, thus not presenting a risk to motor vehicle safety. Ford provided two example scenarios that can lead to the subject noncompliance. In both scenarios the instrument cluster electronics defaults to a sleep mode after a short period of inactivity (requires approximately 10 minutes of inactivity). Under the first scenario, while in the sleep mode, if the vehicle operator inserts the ignition key and activates the ignition through an open window, without first opening the door, and later enters the vehicle through the door, the PRNDx will not be illuminated until the shift lever button is depressed. In the second scenario, after driving, stopping, shifting the vehicle to park, shutting the engine off and removing the ignition key, if the driver remains in the vehicle for approximately 10 minutes without contacting the brake pedal or opening a door, the instrument cluster will go into sleep mode. If the driver then starts the engine in 0.7 seconds or less of performing an action that causes the cluster to wake-up (*e.g.,* touching the brake pedal) the PRNDx will not be illuminated until the shift lever button is depressed.

Upon consideration of these two scenarios, the Agency believes either could occur, although very infrequently. If either situation did happen to occur, the transmission would be in the park position and any further action by the operator to leave the vehicle or shift the vehicle out of the park position, in preparation to drive away, would resolve the PRNDx illumination condition. The noncompliant situations could only exist for short periods of time while the transmission is in the park position and only until the driver takes further action (*i.e.,* leaves the vehicle, depresses the brake pedal, or activates the shift lever button to shift the vehicle from park). Under these rare situations there appears to be very little risk to motor vehicle safety.

Ford explained that as soon as the transmission shift lever release button is depressed, which is required prior to shifting to any non-park position, the PRNDx will illuminate allowing the driver to see and select the desired gear. NHTSA recognizes that if the driver did find themselves in the subject noncompliant condition and attempted a gear change they would have to depress both the brake pedal and the shift lever release button located on the shift lever. Current vehicle designs are required to have a brake transmission shift interlock that forces the driver to depress the brake pedal before the transmission can be shifted from the park position. Either application of the brake pedal or activation of the shift lever release, whichever occurs first, will wake the vehicle dashboard cluster electronics causing the PRNDx to illuminate. The driver is then able to clearly see and select the desired transmission gear position.

Ford stated that the PRNDx illuminates as intended under normal vehicle use and explained that when a driver or passenger door is opened the instrument cluster electronics will wake-up from the sleep mode subsequently meeting the illumination requirements of the safety standard. NHTSA agrees that it is normal behavior for a driver (or passenger) to first open a door to enter the vehicle before starting the engine. It is also normal behavior after entering a vehicle for the

driver to depress the brake pedal and activate the transmission shift release button in order to shift out of the park position. The subject noncompliance could only occur in very rare situations, and only when the vehicle is in the park transmission position, thus not presenting a risk to motor vehicle safety.

Ford lastly stated that if the vehicle is left in any transmission gear other than park, the cluster will not go into sleep mode, the subject condition will not occur, and the PRNDx will illuminate as intended. The Agency understand that if a driver does turn the vehicle off when the transmission is in a gear other than park the instrument cluster electronics will not be allowed to go into a sleep mode and the PRNDx illumination will perform as required by the Standard.

*NHTSA Decision:* In consideration of the foregoing, NHTSA has decided that Ford has met its burden of persuasion that the FMVSS No. 102 noncompliance is inconsequential to motor vehicle safety. Accordingly, Ford's petition is hereby granted and Ford is exempted from the obligation of providing notification of, and a remedy for, that noncompliance under 49 U.S.C. 30118 and 30120.

NHTSA notes that the statutory provisions (49 U.S.C. 30118(d) and 30120(h)) that permit manufacturers to file petitions for a determination of inconsequentiality allow NHTSA to exempt manufacturers only from the duties found in sections 30118 and 30120, respectively, to notify owners, purchasers, and dealers of a defect or noncompliance and to remedy the defect or noncompliance. Therefore, any decision on this petition only applies to the subject vehicles that Ford no longer controlled at the time it determined that the noncompliance existed. However, the granting of this petition does not relieve Ford distributors and dealers of the prohibitions on the sale, offer for sale, or introduction or delivery for introduction into interstate commerce of the noncompliant vehicles under their control after Ford notified them that the subject noncompliance existed.

**Authority:** 49 U.S.C. 30118, 30120: delegations of authority at 49 CFR 1.95 and 501.8.

**Jeffrey M. Giuseppe,**

*Director, Office of Vehicle Safety Compliance.*

[FR Doc. 2015–26802 Filed 10–21–15; 8:45 am]

BILLING CODE 4910–59–P

## DEPARTMENT OF TRANSPORTATION

### Office of the Secretary

**[Docket No. DOT–OST–2010–0054]**

**RIN 2105–ADO4**

### Application To Renew Information Collection Request OMB No. 2105–0551

**AGENCY:** Office of the Secretary (OST), Department of Transportation (Department).

**ACTION:** Notice and request for comments.

**SUMMARY:** In compliance with the Paperwork Reduction Act of 1995 (44 U.S.C. Chapter 35, as amended), the Department of Transportation's Office of the Secretary is forwarding the Information Collection Request (ICR) described below to the Office of Management and Budget (OMB) for approval. The ICR describes the nature of the information and the expected burden. OST published a **Federal Register** notice with a 60-day comment period soliciting comments on the following collection of information on April 16, 2015. The purpose of this notice is to allow the public an additional 30 days from the date of this notice to submit comments to the recently published application to renew ICR 2105–0551, ''Reporting Requirements for Disability-Related Complaints.''

**DATES:** Comments on this notice must be received by November 23, 2015.

**ADDRESSES:** Your comments should be identified by Docket No. DOT–OST–2015–0083 and should be submitted through one of the following methods:

- *Office of Management and Budget, Attention: Desk Officer for U.S. Department of Transportation, Office of the Secretary of Transportation, 725 17th Street NW., Washington, DC 20503.*
- *Email: oira_submission@omb.eop.gov.*
- *Fax: (202) 395–5806.*

**FOR FURTHER INFORMATION CONTACT:** Maegan Johnson, Office of the General Counsel, Office of the Secretary, U.S. Department of Transportation, 1200 New Jersey Avenue SE., Washington, DC 20590, 202–366–9342 (Voice), 202–366–7152 (Fax), or *maegan.johnson@dot.gov* (Email). Arrangements to receive this document in an alternative format may be made by contacting the above-named individuals.

**SUPPLEMENTARY INFORMATION:** The Paperwork Reduction Act of 1995 (PRA) and its implementing regulations, 5 CFR part 1320, require Federal agencies to issue two notices seeking public comment on information collection activities before OMB may approve paperwork packages. 44 U.S.C. 3506, 3507; 5 CFR 1320.5, 1320.8(d)(1), 1320.12. On April 16, 2015, OST published a 60-day notice in the **Federal Register** soliciting comment on ICRs for which the agency was seeking OMB approval. *See* 80 FR 20554. OST received no comments after issuing this notice. Accordingly, the Department has not made any changes to its anticipated burden hours for the respondents to comply with these requirements. The Department announces that these information collection activities have been re-evaluated and certified under 5 CFR. 1320.5(a) and is forwarding to OMB for review and approval pursuant to 5 CFR 1320.12(c).

Before OMB decides whether to approve these proposed collections of information, it must provide 30 days for public comment. 44 U.S.C. 3507(b); 5 CFR 1320.12(d). Federal law requires OMB to approve or disapprove paperwork packages between 30 and 60 days after the 30-day notice is published. 44 U.S.C. 3507(b)–(c); 5 CFR 1320.12(d); *see also* 60 FR 44978, 44983 (Aug. 29, 1995). OMB believes that the 30-day notice informs the regulated community to file relevant comments and affords the agency adequate time to digest public comments before it renders a decision. 60 FR 44983 (Aug. 29, 1995). Therefore, respondents should submit their respective comments to OMB within 30 days of publication to best ensure their full consideration. 5 CFR 1320.12(c); *see also* 60 FR 44983 (Aug. 29, 1995). The summaries below describe the nature of the ICR and the expected burden.

*Title:* Reporting Requirements for Disability-Related Complaints.

*OMB Control Number:* 2105–0551.

*Type of Request:* Renewal of Information Collection Request.

*Background:* On July 8, 2003, the Office of the Secretary published a final rule that requires certificated U.S. and foreign air carriers operating to, from and within the U.S. that conduct passenger-carrying service utilizing at least one large aircraft to record complaints that they receive alleging inadequate accessibility or discrimination on the basis of disability. The carriers must also categorize these complaints according to the type of disability and nature of complaint, prepare a summary report annually of the complaints received during the preceding calendar year, submit the report to the Department's Aviation Consumer Protection Division, and retain copies of correspondence and

records of action taken on the reported complaints for three years. The rule requires carriers to submit their annual report via the World Wide Web except if the carrier can demonstrate an undue burden by doing so and receives permission from the Department to submit it in an alternative manner. The first required report covered disability-related complaints received by carriers during calendar year 2004, which was due to the Department on January 31, 2005. Carriers have been required to submit all subsequent reports on the last Monday in January for the prior calendar year. On November 3, 2010, OMB approved information collection of disability-related complaints, ''Reporting Requirements for Disability-related Complaints'' through November 30, 2013. The application to renew this information collection request was published in the **Federal Register** on Thursday, April 16, 2015, 80 FR 20554.

*Respondents:* Certificated U.S. and foreign air carriers operating to, from, and within the United States that conduct passenger-carrying service with large aircraft.

| Requirements | Number of respondents | Frequency (per year) | Estimated annual burden (per respondent) (hours) | Estimated total annual burden (all respondents) (hours) |
|---|---|---|---|---|
| Record an Categorize Complaints Received | 175 | 0 to 5,000 | 0 to 1,250 | 6,900 |
| Prepare and Submit Annual Report | 175 | 1 | .5 | 87.5 |
| Retain Correspondences and Record of Action Taken | 175 | 0 to 5,000 | 1 | 175 |

*Comments are invited on:* (a) Whether the collection of information is necessary for the proper performance of the functions of the Department, including whether the information will have practical utility; (b) the accuracy of the Department's estimate of the burden of the proposed information collection; (c) ways to enhance the quality, utility and clarity of the information to be collected; and (d) ways to minimize the burden of the collection of information on respondents, including the use of automated collection techniques or other forms of information technology. All comments will also become a matter of public record.

Issued in Washington, DC, on October 14, 2015.

**Patricia Lawton,**

*DOT PRA Clearance Officer, Office of the DOT Chief Information Officer.*

[FR Doc. 2015–26950 Filed 10–21–15; 8:45 am]

**BILLING CODE 4910–9X–P**

## DEPARTMENT OF VETERANS AFFAIRS

### West Los Angeles VA Medical Center; Preliminary Draft Final Master Plan—Public Comment Period

**AGENCY:** Department of Veterans Affairs.

**ACTION:** Notice.

**SUMMARY:** This **Federal Register** Notice announces an opportunity for public comment on the Preliminary Draft Final Master Plan for the West Los Angeles (WLA) Department of Veterans Affairs (VA) campus (hereinafter referred to as the ''Preliminary Draft Final Master Plan''). The WLA campus is approximately 387 acres in the heart of Los Angeles. There are 104 buildings across the campus of which 39 are designated as historic, 12 are considered to be exceptionally high risk for a seismic event, and a number are vacant or closed. The purpose of this Preliminary Draft Final Master Plan is to support VA's ongoing efforts to revitalize the campus into a more Veteran-focused environment, notably for severely disabled, aging, female, and homeless Veterans. This master planning effort is consistent with VA's goal to help end Veteran homelessness nationwide, particularly in the Greater Los Angeles region, one of the largest homeless Veteran populations in the country. This notice solicits public comments on the Preliminary Draft Final Master Plan. At the end of the public comment period, VA will review the comments received, post summary responses into the **Federal Register** via a second notice, ready the Preliminary Draft Final Master Plan for environmental and historic preservation due diligence, and prepare a Final Master Plan for the WLA campus.

**DATES:** Written comments on the Preliminary Draft Final Master Plan must be received on or before December 7, 2015.

**ADDRESSES:** Written comments may be submitted through *http://www.Regulations.gov;* or by mail or hand-delivery to Director, Regulations Management (02REG), Department of Veterans Affairs, 810 Vermont Avenue NW., Room 1068, Washington, DC 20420; or by fax to (202) 273–9026. Comments should indicate that they are submitted in response to ''Notice: Preliminary Draft Final Master Plan.'' All comments received will be available for public inspection in the Office of Regulation Policy and Management, Room 1063B, between the hours of 8 a.m. and 4:30 p.m., Monday through Friday (except holidays). Call (202) 461–4902 for an appointment.

**SUPPLEMENTARY INFORMATION:** The mission of the VA's Veterans Health Administration (VHA) is to honor America's veterans by providing exceptional health care that improves their health and wellbeing. VHA implements VA's medical care, research, and education programs. The WLA campus is part of the larger VA Greater Los Angeles (GLA) Healthcare System, serving Veterans in Los Angeles, Ventura, Santa Barbara, San Luis Obispo and Kern Counties, California. The WLA campus provides a variety of medical services including inpatient and outpatient care, rehabilitation, residential care, and long-term care services. In addition, it serves as a center for medical research and education.

In keeping with VA's goals to reach as many veterans as possible and to ensure that those veterans have a voice regarding the services that they need the most, we have decided to make the Preliminary Draft Final Master Plan available at *http://www.losangeles.va.gov/* upon publication of this notice and invite members of the public or other interested parties to review the Preliminary Draft Final Master Plan and to comment on it. We note that free internet access is available at the public libraries in the VA GLA region listed below to enable the public to review and comment on the Preliminary Draft Final Master Plan. Certain public library systems may require members of the public to hold a valid library card to receive free internet access at their branches. In addition, VA will make physical copies of the Preliminary Draft Final Master Plan available at the public library systems denoted with an asterisk (*).

**City of Los Angeles Public Library System ***

Central Library, 630 W. 5th St., Los Angeles, CA 90071, (213) 228–7000

Donald Bruce Kaufman—Brentwood Branch Library, 11820 San Vicente Blvd., Los Angeles, CA 90049, (310) 575–8273

Palisades Branch Library, 861 Alma Real Dr., Pacific Palisades, CA 90272, (310) 459–2754

Venice—Abbot Kinney Memorial Branch Library, 501 S. Venice Blvd., Venice, CA 90291, (310) 821–1769

West Los Angeles Regional Library, 11360 Santa Monica Blvd., Los Angeles, CA 90025, (310) 575–8323

Westwood Branch Library, 1246 Glendon Ave., Los Angeles, CA 90024, (310) 474–1739

**County of Los Angeles Public Library System ***

West Hollywood Library, 625 N. San Vicente Blvd., West Hollywood, CA 90069, (310) 652–5340

**Santa Monica Public Library System ***

Main Library, 601 Santa Monica Blvd., Santa Monica, CA 90401, (310) 458–8600

**UCLA Library System ***

Powell Library, 405 Hilgard Ave., Los Angeles, CA 90095, (310) 825–1938

For those members of the public in the GLA region that reside outside the County of Los Angeles, we note that the central library branches listed below provide free internet access to the public:

**Kern County Public Library System**

Beale Memorial Library, 701 Truxtun Ave., Bakersfield, CA 93301, (661) 868–0701

**San Luis Obispo County Public Library System**

San Luis Obispo Library, 995 Palm St., San Luis Obispo, CA 93403, (805) 781–5991

**Santa Barbara Public Library System**

Downtown Central Library, 40 E. Anapamu St., Santa Barbara, CA 93101, (805) 962–7653

**Ventura County Public Library System**

E.P. Foster Library, 651 E. Main St., Ventura, CA 93001, (805) 648–2716

**Signing Authority**

The Secretary of Veterans Affairs, or designee, approved this document and authorized the undersigned to sign and submit the document to the Office of the Federal Register for publication electronically as an official document of the Department of Veterans Affairs. Robert L. Nabors II, Chief of Staff, Department of Veterans Affairs, approved this document on October 19, for publication.

Dated: October 19, 2015.

**William F. Russo,**

*Director, Office of Regulation Policy & Management, Office of the General Counsel, Department of Veterans Affairs.*

[FR Doc. 2015–26945 Filed 10–21–15; 8:45 am]

**BILLING CODE 8320–01–P**

# FEDERAL REGISTER

Vol. 80 Thursday,

No. 204 October 22, 2015


Part II

## Environmental Protection Agency

40 CFR Parts 9, 122, 123, *et al.*
National Pollutant Discharge Elimination System (NPDES) Electronic Reporting Rule; Final Rule

**ENVIRONMENTAL PROTECTION AGENCY**

**40 CFR Parts 9, 122, 123, 124, 127, 403, 501, and 503**

**[EPA–HQ–OECA–2009–0274; FRL–9930–70–OECA]**

**RIN 2020–AA47**

# National Pollutant Discharge Elimination System (NPDES) Electronic Reporting Rule

**AGENCY:** Environmental Protection Agency (EPA).

**ACTION:** Final rule.

**SUMMARY:** The Environmental Protection Agency (EPA) is publishing this final regulation that requires the electronic reporting and sharing of Clean Water Act National Pollutant Discharge Elimination System (NPDES) program information instead of the current paper-based reporting of this information. This action will save time and resources for permittees, states, tribes, territories, and the U.S. Government while increasing data accuracy, improving compliance, and supporting EPA's goal of providing better protection of the nation's waters. By modernizing this Clean Water Act reporting program, permittees and regulators will use existing, available information technology to electronically report information and data related to the NPDES permit program. This regulation will help provide greater clarity on who is and who is not in compliance and enhances transparency by providing a timelier, complete, more accurate, and nationally-consistent set of data about the NPDES program. By providing improved data in a more accessible form, this final rulemaking will improve the ability of EPA and authorized NPDES programs to target the most serious water quality and compliance problems. Furthermore, by reducing the time and resources devoted to outdated data management activities, the rule could allow authorized NPDES programs to shift limited resources to important water quality and public health protection activities. The transition from paper to electronic reporting will require close coordination and cooperation between EPA and authorized NPDES programs. This regulation provides important flexibility while still implementing electronic reporting in a timely and effective fashion.

**DATES:** The final rule is effective on December 21, 2015. The incorporation by reference of certain publications listed in this rule was approved by the Director of the Federal Register as of February 7, 2000. In accordance with 40 CFR part 23, this regulation shall be considered issued for purposes of judicial review at 1 p.m. Eastern time on November 5, 2015. The start dates for electronic reporting are provided in 40 CFR 127.16.

**ADDRESSES:** EPA has established a docket for this action under Docket ID No. EPA–HQ–OECA–2009–0274. All documents in the docket are listed on the *www.regulations.gov* Web site. Although listed in the index, some information is not publicly available, *e.g.,* confidential business information or other information whose disclosure is restricted by statute. Certain other material, such as copyrighted material, is not placed on the Internet and will be publicly available only in hard copy form. Publicly available docket materials are available either electronically through *www.regulations.gov* or in hard copy at the EPA Docket Center, EPA West Building, Room 3334, 1301 Constitution Avenue NW., Washington, DC. The Public Reading Room is open from 8:30 a.m. to 4:30 p.m., Monday through Friday, excluding legal holidays. The telephone number for the Public Reading Room is (202) 566–1744. For additional information about EPA's public docket, please visit the EPA Docket Center homepage at *http://www.epa.gov/dockets.*

**FOR FURTHER INFORMATION CONTACT:** For additional information, please contact Messrs. John Dombrowski (202–566–0742) or Carey A. Johnston (202–566–1014), Office of Compliance (mail code 2222A), Environmental Protection Agency, 1200 Pennsylvania Avenue NW., Washington, DC 20460; email addresses: *dombrowski.john@epa.gov* or *johnston.carey@epa.gov.*

**SUPPLEMENTARY INFORMATION:**

## How is this document organized?

The outline of this document follows the following format:

I. General Information
II. Legal Authority
III. Legislative and Regulatory Background
IV. Rulemaking History
V. Summary of Decisions in the Final Rule
VI. Economic Analysis
VII. Regulatory Implementation
VIII. Statutory and Executive Order Reviews

## I. General Information

### *A. Executive Summary*

#### 1. Purpose of the Regulatory Action

The final rule substitutes electronic reporting for paper-based reports and, over the long term, saves time and resources for permittees, states, tribes, territories, and EPA, while improving compliance and better protecting the Nation's waters. The final rule requires permittees and regulators to use existing, available information technology to electronically report information and data related to the NPDES permit program in lieu of filing paper-based reports. Authorized NPDES programs may adopt EPA data systems or elect to use their own data systems to collect NPDES program information as the initial recipient. All authorized programs are required to electronically transmit the federally-required data (identified in appendix A to 40 CFR part 127) to EPA.

The purpose and need for this rule was highlighted in the development of the Clean Water Act Enforcement Action Plan (Plan). Announced by EPA Administrator Lisa Jackson in October 2009, the Plan was a collaborative effort by EPA and state environmental agencies to explore opportunities to improve water quality by emphasizing and adopting new approaches that will improve how the NPDES permitting and enforcement program is administered. The goals of the Plan include improving transparency of the information on compliance and enforcement activities in each state, connecting this information to local water quality, and providing the public with real-time, easy access to this information. The final NPDES Electronic Reporting Rule will make achievement of these goals possible by requiring electronic reporting of facility and operational data, as well as discharge monitoring, compliance, and enforcement data.

In addition to substituting electronic reporting for paper-based reports, the final rule requires authorized NPDES programs to share the minimum set of NPDES program data (appendix A to 40 CFR part 127) with EPA for all facilities including nonmajor facilities. Historically, EPA and authorized NPDES programs have focused on major facilities as a way of prioritizing resources for permitting, enforcement and data sharing. Over time, there has been a growing recognition that these nonmajor sources significantly impact water quality as well. Storm water discharges, concentrated animal feeding operations, mines, and raw sanitary sewage overflows could all be significant contributors to water quality impairment; however, they have not been treated as NPDES major facilities. The final rule is intended to improve data quality collected from major and nonmajor facilities, thereby providing the states, tribes, territories, and EPA with more complete and comparable data on all NPDES permittees. These

data will improve the ability of existing state and federal programs to target the most serious water quality and compliance problems, thus supporting EPA's goal of protecting the nation's waters. A broader and more in-depth discussion of the purpose and need for this rulemaking is provided in Section III of the proposed rule (30 July 2013; 78 FR 46013).

2. Summary of the Key Provisions

This final rule requires NPDES regulated entities to electronically submit NPDES compliance monitoring reports and notices [*e.g.,* Discharge Monitoring Reports (DMRs), Notices of Intent to discharge in compliance with a general permit, other general permit waivers, certifications, and notices of termination of coverage, and program reports] to their authorized NPDES program or to EPA through the National Environmental Information Exchange Network. Importantly, while the final rule changes the mode of transmission of these data (*i.e.,* electronic rather than paper-based reporting), it does not change the information required from NPDES-permitted facilities under existing regulations and practices.

States, tribes, and territories that are authorized to implement the NPDES program are the sources of certain key information regarding the regulated facilities. For example, states have information from NPDES permit applications, which includes information concerning facility location, outfalls, effluent limits, and permit conditions, as well as information from their compliance monitoring activities, violation determinations, and enforcement actions. Under this final regulation, NPDES permitting authorities are required to share important components of this information electronically with EPA. The list of data elements that must be electronically collected, managed, and shared is provided in this final rule (appendix A to 40 CFR part 127). By ''NPDES program,'' this rule refers not only to the discharge permit program, but also the pretreatment program and the biosolids program, both of which are implemented in some ways without NPDES permits.

Separate from this rulemaking, EPA intends to make this more complete set of data available electronically to the public, to promote transparency and accountability by providing communities and citizens with easily accessible information on facility and government performance. This can serve to elevate the importance of compliance information and environmental performance within regulated entities, providing opportunity for them to quickly address any noncompliance. The ease of reviewing and assessing electronically submitted data will help provide greater clarity on who is and who is not in compliance. Currently, some noncompliance information is not easily reviewable by the authorized NPDES programs or accessible to EPA and these noncompliance events are sometimes not resolved in a timely manner. The result of this uneven response to noncompliance by regulators means that some facilities in noncompliance will not take immediate action, which gives them a financial edge over other facilities in states where there is a timelier response to noncompliance. This rule opens the opportunity for two-way communication between authorized NPDES programs or EPA and regulated facilities to immediately address data quality issues and to provide compliance assistance or take other action when potential problems are identified. Complete and accurate data also will allow comparison of performance across authorized NPDES programs as well as EPA's performance.

Key provisions of this final rule are identified in the implementation schedule in Section VII of the preamble. This includes the schedule of milestones for NPDES program data submission from states, tribes, and territories regarding their implementation activities, programs and permits as well as electronic NPDES program data submissions from regulated entities.

3. Costs and Benefits

To fully implement this final regulation, there will be initial investment costs associated with needed changes to information technology and infrastructure. For example, EPA has developed a data system called the [Integrated Compliance Information System for the National Pollutant Discharge Elimination System (ICIS–NPDES) and two NPDES electronic reporting systems to collect NPDES program data (NetDMR and NPDES eReporting Tool (NeT)]. While all authorized NPDES programs are welcome to use EPA's data systems, authorized NPDES programs also have the flexibility to develop their own data systems that meet the regulatory requirements of 40 CFR part 3 (including, in all cases, subpart D), 40 CFR 122.22, and 40 CFR part 127. EPA will continue to closely work with authorized NPDES programs to make EPA's systems available and assist the development of their data systems in a cost-effective manner.

The initial cost of implementing the final rule is $77.9 million in undiscounted dollars (see Table 4–11: Total Initial Implementation Costs of the Rule, DCN 0197). While most of these costs are incurred within the first year after the effective date of the rule, this estimate includes certain recurring activities that should cease once full implementation is achieved. Five years after rule promulgation, assuming all regulated facilities have converted to electronic reporting (other than 1 percent that are assumed to receive waivers from electronic reporting), the cost is estimated to be $20.3 million per year in undiscounted dollars (see Table 4–10: Annual Cost of Data Entry and Operations for the Updated System after Implementation, DCN 0197). However, one year after rule promulgation, annual savings greatly outweigh annual costs, by approximately $23.9 million per year [calculated by subtracting the projected costs in year one from the projected savings; see Table 4–16: Schedule of Savings and Costs (3% Discount Rate), DCN 0197]. Cumulative savings over a ten-year period (using a 3 percent discount rate) are $406 million while cumulative costs are $250 million. As a result the overall economic effect of this rule is a net cumulative savings of $156 million over the ten years of the projection.

The final rule will save money for states, tribes, and territories authorized to administer the NPDES program as well as EPA and most NPDES permittees, while resulting in a more complete, more accurate, and nationally-consistent set of data about the NPDES program. With full implementation (expected to be five years after the effective date of the final rule), the anticipated annual net savings are expected to be $22.6 million for NPDES programs, $0.5 million for regulated entities, and $1.2 million for EPA, assuming a 3% discount rate [calculated by subtracting the projected costs in year five from the projected savings in year five; see Table 4–16: Schedule of Savings and Costs (3% Discount Rate), DCN 0197]. The economic analysis supporting this rule provides a more detailed description of the costs and savings (see DCN 0197).

The electronic submittal of data will help support EPA's goal of protecting and restoring water quality and will result in significant cost savings for the authorized NPDES programs, as well as savings for the permittees and EPA, when the rule is fully implemented. The final rule will also reduce the reporting burden currently borne by the authorized NPDES programs, improve overall facility compliance, allow better

allocation and use of limited program resources, and enhance transparency and public accountability by allowing EPA to provide the public with timely information on potential sources of water pollution.

The final rule will also lighten the reporting burden currently placed on the authorized NPDES programs. Upon successful implementation, the final rule would provide authorized NPDES programs with regulatory relief from reporting associated with the non-compliance reporting [see 40 CFR 123.45—(a) Quarterly Non-Compliance Report (QNCR), (b) Semi-Annual Statistical Summary Report, and (c) Annual Non-Compliance Report (ANCR)] and the biosolids report submitted to EPA annually by authorized NPDES programs with the Federal biosolids program (40 CFR 501.21).

4. Compliance Dates for Final Rule

The implementation schedule for the final rule is divided in two phases. Prior to the deadline for each phase, EPA will work with authorized NPDES programs to collect the necessary facility, permit, inspection, and enforcement action information that supports electronic reporting. For example, EPA will work with authorized NPDES programs which opt to use EPA's national NPDES data system (*i.e.,* ICIS–NPDES) to ensure that the necessary facility and permit data are entered no later than nine months after the effective date of the final rule to allow for the electronic reporting of DMR data and Sewage Sludge/Biosolids Annual Program Report data, which are scheduled for the first phase. Likewise, EPA will also work with authorized NPDES programs to collect the necessary data to support electronic reporting for the second phase. Regulated entities must report electronically prior to this compliance schedule if required to do so in their permit or any other enforcement instrument issued by the relevant NPDES program. This rule reinforces existing electronic reporting efforts by authorized programs and regulated entities. The rule also grandfathers any existing requirements to report electronically.

The key compliance dates are set out below and set out in further details in Section VII and in the final rule (see 40 CFR 127.16).

• *Phase 1 Data:* Authorized NPDES programs must electronically transmit to EPA basic facility and permit information (see list of data elements in ''ICIS Addendum to the Appendix of the 1985 Permit Compliance System Policy Statement,'' 28 December 2007, DCN 0007, also known as Water Enforcement National Database or ''WENDB'') for all permits as well as other data necessary for implementation of Phase 1 data collection within nine months after the effective date of the final rule. One year after the effective date of the final rule, authorized NPDES programs must start electronically transmitting to EPA their state performance data (subject to applicable waivers), which includes information generated from compliance monitoring (*e.g.,* inspections), violation determinations, and enforcement actions. Additionally, one year after the effective date of the final rule, NPDES regulated entities that are required to submit DMRs (including majors and nonmajors, individually permitted facilities and facilities covered by general permits) must do so electronically. EPA and authorized NPDES programs will begin electronically receiving these DMRs from all DMR filers and start sharing these data with each other. One year after the effective date of the final rule, all NPDES regulated entities in states where EPA is the authorized NPDES biosolids program (currently 42 of 50 states and all other tribal lands and territories) must electronically submit their Sewage Sludge/Biosolids Annual Program Report to EPA.

• *Phase 2 Data:* Authorized NPDES programs have five years to begin electronically collecting, managing, and sharing the remaining set of information in appendix A in 40 CFR part 127. This information includes: General permit reports [*e.g.* Notice of Intent to be covered (NOI); Notice of Termination (NOT); No Exposure Certification (NOE); Low Erosivity Waiver and Other Waivers from Stormwater Controls (LEW)]; Sewage Sludge/Biosolids Annual Program Report (where the state is the authorized NPDES biosolids program); and all other remaining NPDES program reports (*e.g.,* CAFO Annual Report, Pretreatment Program Annual Report). Authorized NPDES programs will also share with EPA all data necessary for implementation of Phase 2 data collection three months before the Phase 2 deadline as defined in the data element analysis for the final rule (see DCN 0200). Additionally, one year after the effective date of the final rule, authorized NPDES programs will submit an implementation plan (IP) for meeting the Phase 2 data requirements for EPA to review. EPA will inform the state if its IP is inadequate.

• *NPDES Noncompliance Report (NNCR) and Other State Reporting:* EPA will replace a number of currently required state reports (*e.g.,* QNCR and ANCR) with the new NNCR when EPA has a timely, complete, more accurate, and nationally-consistent set of data about the NPDES program. Full implementation of the NNCR and phase out of certain state reports will only be possible one full year after full implementation of Phase 2 data collection (*i.e.,* six years after the effective date of this rule). A complete set of Phase 1 and 2 data are necessary to develop and produce the NNCR.

As with any new regulation, some authorized NPDES programs may need to update their regulations or statutes to make clear that electronic reporting is required for the reports listed in Table 1 of appendix A and that these electronic submissions must be compliant with 40 CFR part 127 (including appendix A) and 40 CFR part 3 (including, in all cases, subpart D) [Cross-Media Electronic Reporting Regulation (CROMERR)—authentication and encryption standards]. Existing EPA regulations at 40 CFR 123.62(e) require that any updates to the authorized NPDES program take place within one year of the effective date of the final rule (if no state statute change is required) and within two years of the effective date of the final rule (if a state statute change is required). Accordingly, all authorized NPDES programs should complete any necessary updates to their state regulations within one year and statutes within two years of the effective date of the final rule.

*B. Does this action apply to me?*

Entities potentially affected by this action include all NPDES-permitted facilities, whether covered by an individual permit or general permit, industrial users located in cities without approved local pretreatment programs, and governmental entities that have received NPDES program authorization or are implementing portions of the NPDES program in a cooperative agreement with EPA. These entities include:

| Category | Examples of regulated entities |
|---|---|
| NPDES-permitted facilities | Publicly-owned treatment works (POTW) facilities, treatment works treating domestic sewage (TWTDS), municipalities, counties, stormwater management districts, state-operated facilities, Federally-operated facilities, industrial facilities, construction sites, and concentrated animal feeding operations (CAFOs). |
| Facilities seeking coverage under NPDES general permits. | Stormwater management districts, construction sites, CAFOs, POTWs, TWTDS, municipalities, counties, stormwater management districts, and state-operated facilities. |
| Industrial users located in cities without approved local pretreatment programs. | Industrial facilities discharging to POTWs and for which the designated pretreatment Control Authority is EPA or the authorized state, tribe, or territory rather than an approved local pretreatment program. |
| State and territorial government | States and territories that have received NPDES program authorization from EPA, that are implementing portions of the NPDES program in a cooperative agreement with EPA, or that operate NPDES-permitted facilities. |
| Tribal government | Tribes that have received NPDES program authorization from EPA, that are implementing portions of the NPDES program in a cooperative agreement with EPA, or that operate NPDES-permitted facilities. |
| Federal government | Federal facilities with a NPDES permit and EPA Regional Offices acting for those states, tribes, and territories that do not have NPDES program authorization or that do not have program authorization for a particular NPDES subprogram (*e.g.,* biosolids or pretreatment). |

This table is not intended to be an exhaustive list, but rather provides some examples of the types of entities regulated by this action. Other types of entities not listed in this table may also be regulated.

## II. Legal Authority

Pursuant to the Clean Water Act (CWA), 33 U.S.C. 1251 *et seq.,* the U.S. Environmental Protection Agency (EPA) is promulgating the National Pollutant Discharge Elimination System (NPDES) Electronic Reporting Rule, which adds a new part to title 40 (40 CFR part 127) as well as making changes to existing regulations. The U.S. Environmental Protection Agency is promulgating the NPDES Electronic Reporting Rule under authority of the CWA sections 101(f), 304(i), 308, 402, and 501. EPA notes that the Congressional Declaration of Goals and Policy of the CWA specifies in section 101(f) that ''It is the national policy that to the maximum extent possible the procedures utilized for implementing this chapter shall encourage the drastic minimization of paperwork and interagency decision procedures, and the best use of available manpower and funds, so as to prevent needless duplication and unnecessary delays at all levels of government.''

Harnessing information technology that is now a common part of daily life is an important step toward reaching the goals of the CWA. EPA is promulgating this rule under the authority of CWA section 304(i) that authorizes EPA to establish minimum procedural and other elements of state programs under section 402, including reporting requirements and procedures to make information available to the public. In addition, EPA is promulgating this rule under section 308 of the CWA. Section 308 of the CWA authorizes EPA to require access to information necessary to carry out the objectives of the Act, including sections 301, 305, 306, 307, 311, 402, 404, 405, and 504. Section 402 of the CWA establishes the NPDES permit program for the control of the discharge of pollutants into the nation's waters. EPA is promulgating this rule under CWA sections 402(b) and (c), which require each authorized state, tribe, or territory to ensure that permits meet certain substantive requirements, and provide EPA information from point sources, industrial users, and authorized programs in order to ensure proper oversight. Finally, EPA is promulgating this rule under the authority of section 501, which authorizes EPA to prescribe such regulations as are necessary to carry out provisions of the Act.

Under section 509(b)(1) of the CWA, judicial review of this regulation can be had only by filing a petition for review in the U.S. Court of Appeals within 120 days after the regulation is considered issued for purposes of judicial review. Under section 509(b)(2), the requirements in this regulation may not be challenged later in civil or criminal proceedings brought by EPA to enforce these requirements.

## III. Legislative and Regulatory Background

### *A. The Clean Water Act*

The 1948 Federal Water Pollution Control Act and subsequent amendments are now commonly referred to as the Clean Water Act (CWA). The CWA establishes a comprehensive program for protecting and restoring our nation's waters. The CWA established the NPDES permit program to authorize and control the discharges of pollutants to waters of the United States [CWA section 402]. This final rule, which is intended to reduce resource burdens associated with the paper-based system and increase the timeliness, accuracy, completeness, and usefulness of the information received by EPA, the states, tribes, territories, and the public, echoes the goals of CWA section 101(f).

Implementation of information technology that is now a common part of daily life is an important step toward reaching the goals of the CWA. EPA is promulgating this rule under the authority of CWA section 304(i) that authorizes EPA to establish minimum procedural and other elements of state programs under section 402, including reporting requirements and procedures to make information available to the public. In addition, EPA is promulgating this rule under the authority of section 308 of the CWA. Section 308 of the CWA authorizes EPA to require information to carry out the objectives of the Act, including sections 301, 305, 306, 307, 311, 402, 404, 405, and 504. Section 402 of the CWA establishes the NPDES permit program for the control of the discharge of pollutants into the nation's waters. EPA is promulgating this rule under CWA sections 402(b) and (c), which require each authorized state, tribe, or territory to ensure that permits meet certain substantive requirements, and provide EPA information from point sources, industrial users, and the authorized program in order to ensure proper oversight. Finally, EPA is promulgating this rule under the authority of section 501 of the Act, authorizing EPA to prescribe such regulations as are necessary to carry out provisions of the Act.

*B. National Pollutant Discharge Elimination System*

As authorized by the CWA, the NPDES permit program protects the nation's waters by controlling the discharge of pollutants into waters of the United States. Such discharges are illegal unless authorized by an NPDES permit. The NPDES permit program requires all point source discharges of pollutants (other than dredged or fill material regulated under Section 404 of the CWA) to waters of the United States to have a permit, the term of which may not exceed five years. The term ''NPDES-regulated facilities,'' as used in this rule, refers broadly to entities regulated under the Clean Water Act, including permittees under CWA section 402 along with the biosolids program, indirect dischargers, and non-discharging entities with permits. NPDES permits may be issued by EPA or by a state, tribe, or territory authorized by EPA to implement the NPDES program. As of May 1, 2015, EPA has authorized 46 states and the Virgin Islands to implement the base NPDES program as well as the general permits program; as of that same date, no tribe was currently authorized to implement the NPDES program. There are several subprograms of the NPDES program that states, tribes, and territories may also receive authorization from EPA to administer, including the pretreatment and the biosolids programs. As of May 1, 2015, 36 states are authorized to implement the pretreatment program and eight states are authorized to implement the biosolids program as part of the NPDES program.

Authorization to discharge may be provided under an individual NPDES permit, which is developed after a process initiated by the facility's submission of a permit application (40 CFR 122.21), or under a general NPDES permit (for example, most oil and gas extraction facilities and most construction sites operate under NPDES general permits). See 40 CFR 122.28(a)(2). Authorization to discharge under a general NPDES permit typically occurs following the submission of an NOI by the facility seeking authorization to discharge under the permit [40 CFR 122.28(b)(2)] and approval of that NOI by the permitting authority. Submission of an NOI is not required for specified types of discharges under certain circumstances [40 CFR 122.28(b)(2)(v)]. Most NPDES-permitted sources are regulated under general permits.

EPA has developed criteria to determine which sources should be considered ''major'' facilities (see DCN 0195). The distinction was made initially to assist EPA, states, tribes, and territories in setting priorities for permitting, compliance, and enforcement activities. Historically, EPA has placed greater priority on major facilities and has required NPDES-authorized states, tribes, and territories to provide more information about these dischargers. EPA's previous regulations establish annual, semi-annual, and quarterly reporting requirements, which mostly focused on major facilities. These previous reporting requirements provided violation information and facilitated EPA's assessment of the effectiveness of authorized programs and EPA regional program activities (*e.g.,* permitting, compliance monitoring, and enforcement). This information has guided EPA in the management and oversight of program activities. More background information regarding the NPDES program is in the docket supporting this rulemaking (see DCN 0005).

*C. Evolution of the NPDES Program and Data Sharing*

In order to support development of appropriate permit limits and conditions, issuance of effective permits, compliance monitoring, and appropriate enforcement actions, EPA has developed requirements along with policies, guidance, and expectations to track, measure, evaluate, and report on these efforts on a nationwide basis. Over the past 30 years, these efforts to establish significant pollutant controls focused primarily on major facilities and resulted in important pollutant discharge reductions from traditional major sources.

Although major municipal and industrial point sources continue to be significant sources of pollution, permitting experience with more diffuse sources shows that these point sources also contribute significant amounts of pollutants to our nation's waters. About 40,000 nonmajor facilities have individual permits which have requirements similar to the permits for major facilities (*e.g.,* requirements to submit DMRs) (source: ICIS–NPDES). As the understanding of water quality issues has evolved, the universe of regulated nonmajor sources has also expanded. In order to efficiently manage the growing universe of regulated facilities, sources that are sufficiently similar are often regulated under general permits rather than individual permits. In many cases, nonmajor facilities use pollutant control measures based on best management practices in operational activities rather than on implementation of pollutant control technologies, which are measured with numeric effluent limits on pollutant discharges and reported on DMRs. Several hundred thousand nonmajor facilities are covered by NPDES general permits; therefore, the number of nonmajor dischargers covered by general permits is very large compared to the number of major or nonmajor dischargers covered by individual permits. The universe of nonmajor dischargers also includes some large volume dischargers (*e.g.,* MS4s) that had not previously been regulated with the same types of individual permits used to regulate discharges from major facilities.

The most recent state water quality assessment reports submitted under CWA section 305(b) and compiled by EPA in the National Water Quality Inventory Reports indicate the growing significance and link between nonmajor sources and impairments in water quality of U.S. waters, particularly from precipitation-induced or ''wet weather'' point sources of pollutants.[1] These sources include discharges of stormwater associated with construction, concentrated animal feeding operations (CAFOs), overflows from combined sewer systems (CSSs) and sanitary sewer systems (SSSs), and urban stormwater pollution from Municipal Separate Storm Sewer Systems (MS4s). Stormwater discharges include a variety of pollutants, such as sediment, oil and grease, chemicals, nutrients, metals, and pathogens. Discharges from CAFOs often include bacteria, nutrients, organic matter, pathogens, and trace metals. Overflows from combined and separate sanitary sewer systems pose a significant threat to public health and the environment due to high concentrations of bacteria from fecal contamination, as well as disease-causing pathogens. Common pollutants discharged from MS4s include oil and grease from roadways, pesticides from lawns, sediment from construction sites, and carelessly discarded trash, such as cigarette butts, paper wrappers, and plastic bottles. The pollution controls for wet-weather sources are often best management practices (BMPs) rather than traditional end-of-pipe controls. These wet-weather

[1] The link provides access to the 2004 Water Quality Report to Congress, which was the last hard-copy version of this report. Since 2004 these data are made available directly via the ATTAINS database (link provided at above site). The ATTAINS database provides state information showing the water quality impairments and the likely causes of impairments. In particular, ''Urban-Related Runoff/Stormwater'' ranks high among the list of impairment causes. See: *http://ofmpub.epa.gov/waters10/attains_nation_cy.control.*

sources are high priorities for EPA and authorized NPDES programs and have been for almost over two decades.

In the past, states, tribes, and territories generally did not consistently share information with EPA on most wet-weather sources. Therefore, EPA and the public do not have complete information on these pollution sources. Electronic reporting from all NPDES permittees will efficiently provide these data and will assist EPA and authorized NPDES programs in focusing their limited resources on the most significant water pollution sources and violations, whether from major or nonmajor facilities.

Transitioning to electronic reporting and data sharing will bring the NPDES program into the 21st century. Tracking data electronically is less expensive, more efficient, more accurate, and better able to support program management decisions than paper tracking (see July 30, 2013; 78 FR 46015–17, DCN 0015). In particular, Congress and the public expect environmental program managers at every level of government—local, state, tribal, territorial, and federal—to design and implement programs that deliver environmental and public health results. To target the most important pollution problems, better ensure environmental protection and public health, and enable more integrated program assessment and planning at the national level, the data that are electronically collected, managed, and shared between authorized NPDES programs and EPA should have the following characteristics:

I. *The data should be current.* Recent data are more likely to be representative of current conditions. Although historical data may be useful in identifying trends and patterns, outdated data are not as reliable for drawing conclusions as to the current level of discharge, the compliance status at permitted facilities, or for making plans for improvements.

II. *The data should generally be comparable in format, reporting units, frequency, etc.* In order to aggregate and compare data across the states, tribes, and territories for national program planning and reporting purposes, it is important that the data from the individual states, tribes, and territories be reported in a similar format (*e.g.,* reporting units are the same and the metrics being measured are defined identically) and with the same minimum frequency. For example, for EPA to assess the volume of waste discharged by POTWs nationally, those providing the data would need to consistently provide data to EPA, share the same definition of POTWs, the same definition of volume (per day, per week, per month) and express the measure in the same units (gallons, million gallons, cubic feet, liters, etc.). However, authorized NPDES programs can certainly institute more stringent reporting requirements than EPA (if shared data remain nationally consistent).

III. *The data should be accurate and complete.* Incomplete, inaccurate data can lead to wrong conclusions. For example, the significant noncompliance rate for major facilities is a key indicator of the effectiveness of the NPDES compliance and enforcement program. This rate is derived in large part from effluent data self-reported in DMRs to EPA, the states, tribes, and territories by major facilities. These data are then entered into or provided to ICIS–NPDES by the states, tribes, territories, or EPA. Incomplete compliance data in ICIS–NPDES prevent EPA from adequately assessing industry, state, and national noncompliance rates and identifying any potential corrective actions. Consequently, program planning and authorized program evaluation resulting from such incomplete data can be unreliable.

Similarly, incomplete data may result in inaccurate conclusions as to noncompliance rates for nonmajor permittees. EPA found through the Annual Noncompliance Report (ANCR) (see DCN 0016) [2] for NPDES Nonmajor Permittees that the reported noncompliance rate for serious violations is much higher for those authorized NPDES programs with detailed compliance data in EPA's national data systems than it is for authorized NPDES programs that only provide summary data. These findings suggest that instances of noncompliance may be higher than reported by states, tribes, and territories that do not routinely provide facility-specific compliance data to EPA's national data systems. The final rule will ensure that DMR information from facilities and ANCR data from authorized NPDES programs would be received electronically, allowing the data system to identify violations and thereby reducing the burden on states, tribes, territories, and EPA to independently identify effluent violations.

IV. *The data should be nationally consistent.* EPA needs nationally consistent data to make program evaluation and subsequent planning transparent and replicable. The basis for EPA's planning and conclusions about the status of program implementation needs to be readily available to those affected, including the regulated community, the general public, Congress, federal, state, tribal, and territorial agencies. For example, the data that EPA needs to evaluate the performance of an authorized program should be readily available to EPA (and readily available from EPA to the state, tribe, or territory) and the state, tribe, or territory should be able to easily duplicate EPA's analysis.

These factors demonstrate the need for a shared definition and central management of the information necessary to manage the NPDES program, ready access to that information by states, tribes, territories, and EPA, and assurance that the data across the authorized NPDES programs are complete, more accurate, and timely reported. The final rule provides parameters for the shared data, ensures the accessibility of that information, and provides the basis for ensuring that the data are nationally consistent, complete, more accurate, and timely.

### *D. EPA's Next Generation Compliance Strategy*

EPA's Next Generation Compliance is an integrated strategy to improve regulations and permits with new monitoring and information technology and expanded transparency.[3] It is designed to motivate the regulated community to increase compliance, inform the public about performance, and help ensure the public has access to information about their communities that allows them to more fully engage in environmental protection efforts.

In addition to converting reporting from a paper to electronic format, the electronic system guides the user through the reporting process with integrated compliance assistance and data quality checks. From a compliance perspective, electronic reporting will allow regulated entities, governmental agencies, and the public to more quickly identify violations, and then more quickly address them.

Electronic reporting is a key component of the Next Generation Compliance Strategy (see DCN 0192). This strategy and rulemaking record shows that the shift from paper reporting toward electronic reporting is easier, more efficient, and costs less for the facility and for regulatory agencies. Electronic systems are used in the modern era for almost every kind of transaction. For the user, these systems offer speed, convenience, expanded

[2] 2008 ANCR, available at *http://www.epa-echo.gov/echo/ancr/us/docs/ancr_report_2008.pdf.*

[3] See *http://www2.epa.gov/compliance/next-generation-compliance.*

information choices and filing capabilities. For government, they offer the ability to increase transparency and an opportunity to improve the ability to spot pollution and compliance issues and respond quickly to emerging problems. Under EPA policy, electronic reporting is now the default assumption for new regulations (see DCN 0193).

## IV. Rulemaking History

### *A. Proposed Rule*

Since 2002, EPA and the authorized NPDES programs have worked together to update the information and data that states, tribes, territories, and EPA need to successfully implement, manage, and oversee the NPDES program. Various iterations of critical data elements were discussed by the state and EPA members of the Permit Compliance System (PCS) Steering Committee, the PCS Modernization Executive Council, and the Expanded PCS Steering Committee, which added representatives from the Environmental Council of the States (ECOS) and the Association of Clean Water Administrators (ACWA).[4] Those efforts led to the April 2007 issuance by EPA of a draft ICIS–NPDES Policy Statement that included the list of NPDES data elements that states, tribes, and territories would report to EPA (see DCN 0056).

After receiving numerous comments on the draft ICIS–NPDES Policy Statement from the states, EPA began to develop a federal regulation that would require electronic reporting of specific NPDES information from the regulated permittees, states, tribes, and territories (see DCN 0215 and 0216). In 2010, EPA initiated an effort to carefully review the data needs and uses, identify the types of information and specific data elements that would allow EPA to meet those needs and uses, and evaluate whether some information should be sought directly from NPDES-regulated facilities or from states, tribes, and territories. This was done with full acknowledgement that for certain activities (such as permit issuance, inspections, compliance determinations, and issuance of enforcement actions), the states, tribes, and territories are the unique source of the identified NPDES information. During the summer of 2010, EPA conducted a series of concurrent technical analyses of various data types and facility types, which examined the feasibility of electronic reporting, various regulatory options, the existing regulatory data and reporting requirements, key considerations, and preliminary information regarding costs and benefits (see DCN 0018, 0019, 0020, 0021, 0022). After significant deliberations and consultations with states, EPA published the proposed rule on 30 July 2013 (78 FR 46006) and opened a 135 day public comment period.

EPA received 170 public comments on the proposed rule from a variety of stakeholder groups. The comments were generally supportive of electronic reporting as modern and efficient, but raised issues regarding aspects of the proposed implementation and operation of the rule. Table 1 provides an overview of the public comments EPA received during the proposed rule comment period. The largest number of public comments (by pages) came from state government agencies with industrial stakeholders contributing most of the remaining comments. Many of the industrial comments came from the agricultural sector.

TABLE 1—NUMBER OF PROPOSAL PUBLIC COMMENTS

| Commenter type | Number of submissions | Number of comment pages |
|---|---|---|
| Anonymous or Individual Person | 32 | 44 |
| Environmental Advocacy Organization | 3 | 22 |
| Government (Local) | 28 | 114 |
| Government (State) | 39 | 308 |
| Government (Federal) | 2 | 5 |
| Industry (Misc.) | 39 | 188 |
| Industry (Agriculture) | 25 | 163 |
| Industry (Software Vendors) | 2 | 6 |
| Total | 170 | 850 |

EPA considered all of these comment submissions and identified the key issues raised by commenters. EPA has responded to these comments in the comment response document supporting this rulemaking (see DCN 0218).

### *B. Supplemental Notice of Proposed Rulemaking (SNPR)*

On 1 December 2014, EPA published a supplemental notice to the 2013 proposed NPDES Electronic Reporting Rule and opened a 60-day public comment period (79 FR 71066). EPA used this document to identify many of the issues raised by commenters during the public comment period for the proposed rule, clarify misunderstandings about the proposal, and discuss possibilities for how EPA might modify the rule to address issues raised by stakeholders.

EPA received 58 public comments on the supplemental notice to the proposed rule from a variety of stakeholder groups. The comments were again generally supportive of electronic reporting as modern and efficient and provided meaningful comments on alternative means for implementing the final rule. Table 2 provides an overview of the public comments EPA received during the SNPR comment period. As with the proposed rule, the largest number of public comments (by pages) came from state government agencies.

[4] Formerly known for 50 years as the Association of State and Interstate Water Pollution Control Agencies (ASIWPCA).

TABLE 2—NUMBER OF SUPPLEMENTAL NOTICE OF PROPOSED RULEMAKING PUBLIC COMMENTS

| Commenter type | Number of submissions | Number of comment pages |
|---|---|---|
| Anonymous or Individual Person | 1 | 1 |
| Environmental Advocacy Organization | 2 | 9 |
| Government (Local) | 4 | 12 |
| Government (State) | 28 | 179 |
| Government (Federal) | 1 | 6 |
| Industry (Misc.) | 17 | 75 |
| Industry (Agriculture) | 4 | 19 |
| Industry (Software Vendors) | 1 | 4 |
| Total | 58 | 305 |

EPA considered all of these comment submissions and has responded to these comments in the comment response document supporting this rulemaking (see DCN 0218).

*C. Outreach*

Section VI of the proposed rule details EPA's extensive outreach efforts prior to the proposed rule. EPA continued this outreach during the public comment period on the proposed rule (DCN 0111). In particular, EPA held over 30 webinars and meetings with over 1,200 people to discuss the proposed rule. In addition to two public comment periods, EPA has conducted additional stakeholder meetings to further discuss and refine particular aspects of the rule prior to promulgation.

Many states expressed concerns with the proposed rule. EPA held teleconferences with authorized NPDES programs to obtain their individual views on various aspects of the proposed rule. EPA met with over twenty five states, ECOS, ACWA, and New England Interstate Water Pollution Control Commission to take into account their individual comments and concerns about the rule (see DCN 0128 to 0142, 0181, 0219 to 0229). Additionally, EPA separately contacted each authorized NPDES program to individually assess its readiness for these new electronic reporting requirements. This extensive outreach helped inform the implementation process of the final rule and the additional flexibilities that authorized states, tribes, and territories need for a measured and orderly conversion from paper to electronic reporting. As noted elsewhere in this preamble, EPA has extended the time for full implementation of this final rule from two years to five years. EPA has also provided authorized NPDES programs with more flexibility in how they administer electronic reporting waivers. EPA will continue its outreach to NPDES regulated entities and authorized NPDES programs during the implementation of this final rule.

## V. Summary of Decisions in the Final Rule

This section identifies the regulatory changes made by this final rule and the significant decisions made by EPA in response to public comments. EPA has responded to all public comments in the comment response document supporting this rulemaking (see DCN 0218).

*A. Overview of Existing Regulations Modified by the Final Rule*

EPA is amending the following NPDES regulations to require electronic reporting by NPDES-regulated facilities, to require electronic reporting of NPDES information by the states, tribes, and territories to EPA, and to eliminate some existing reporting requirements, particularly those for states, tribes, and territories. In addition to the creation of a new 40 CFR part 127, the final rule adds or modifies the following existing regulations:

- 40 CFR 122.22. Signatories to permit applications and reports;
- 40 CFR 122.26(b)(15), (c)(1)(ii), and (g)(1)(iii). Stormwater discharges (applicable to State NPDES programs, see 40 CFR 123.25);
- 40 CFR 122.28(b)(2). General Permits (applicable to State NPDES programs, see 40 CFR 123.25);
- 40 CFR 122.34(g)(3). Reporting [as related to small Municipal Separate Storm Sewer Systems (MS4s)];
- 40 CFR 122.41(l)(4)(i). Monitoring reports [Discharge Monitoring Reports];
- 40 CFR 122.41(l)(6). Twenty-four hour reporting [Noncompliance which may endanger health or the environment];
- 40 CFR 122.41(l)(7). Other noncompliance;
- 40 CFR 122.41(l)(9). Identification of the Initial Recipient for the Electronic Reporting of NPDES Program Data [a new standard condition added by this final rule];
- 40 CFR 122.41(m)(3). Notice [as related to Bypass sewer overflows];
- 40 CFR 122.42(c). Municipal separate storm sewer systems [as related to medium or large MS4s];
- 40 CFR 122.42(e)(4). Annual reporting requirements for CAFOs;
- 40 CFR 122.43. Establishing permit conditions (applicable to State NPDES programs, see 40 CFR 123.25);
- 40 CFR 122.44(i). Monitoring requirements;
- 40 CFR 122.48(c). Requirements for recording and reporting of monitoring results (applicable to State NPDES programs, see 40 CFR 123.25);
- 40 CFR 122.63(f). Minor modifications of permits [a new option that explicitly states that NPDES programs may use the minor modification process to incorporate electronic reporting into NPDES permits];
- 40 CFR 122.64(c). Termination of permits (applicable to State NPDES programs, see 40 CFR 123.25);
- 40 CFR 123.22. Program description;
- 40 CFR 123.24(b)(3). Memorandum of Agreement with the Regional Administrator;
- 40 CFR 123.25(a). Requirements for permitting;
- 40 CFR 123.26. Requirements for compliance evaluation programs;
- 40 CFR 123.41(a). Sharing of information;
- 40 CFR 123.43(d). State data transmission of information from states to EPA;
- 40 CFR 123.45. Noncompliance and program reporting by the Director; [this replaces several state reports of noncompliance with the NNCR];
- 40 CFR 403.10(f). State Pretreatment Program requirements;
- 40 CFR 403.12(e). Periodic reports on continued compliance [Pretreatment program reports for Categorical Industrial Users];

• 40 CFR 403.12(h). Reporting requirements for Industrial Users not subject to categorical Pretreatment Standards [Pretreatment program reports for Significant Industrial Users not subject to EPA categorical pretreatment standards];

• 40 CFR 403.12(i). Annual POTW reports [Pretreatment program report];

• 40 CFR 501.21. Program Reporting to EPA (State Sludge Management Program) [the final rule eliminates the state annual biosolids report to EPA];

• 40 CFR 503.18. Reporting [Sewage Sludge/Biosolids Annual Program Report for land application];

• 40 CFR 503.28. Reporting [Sewage Sludge/Biosolids Annual Program Report for surface disposal]; and

• 40 CFR 503.48. Reporting [Sewage Sludge/Biosolids Annual Program Report for incineration].

EPA has grouped the existing NPDES reporting requirements into ''NPDES Data Groups,'' which are defined and listed in 40 CFR 127.2(c) and in Table 1 to appendix A of 40 CFR part 127. As defined in 40 CFR 127.2(c), the term ''NPDES data group'' means the group of related data elements identified in Table 1 in appendix A to 40 CFR part 127. These NPDES data groups have similar regulatory reporting requirements and have similar data sources. The final rule uses the NPDES Data Groups to identify the minimum set of data elements for each type of NPDES reporting (*e.g.,* DMRs, NOIs, program reports) and to help permittees and regulated entities identify the initial recipient, as defined below in Section B.1, of electronic NPDES data submissions.

*B. Implementation*

1. Initial Recipient Status

Under the final rule, NPDES-regulated entities are required to submit NPDES program data to the designated initial recipient, as defined in 40 CFR 127.2(b). For this rule, the term ''initial recipient'' means the governmental entity, either the state or EPA, who first receives the NPDES program data listed in appendix A to 40 CFR part 127. The initial recipient designation is made separately for each state and by each NPDES data group, which is defined in 40 CFR 127.2(c). EPA is using the initial recipient term to help NPDES regulated entities properly identify the recipient for their electronic NPDES program data submissions. The initial recipient provision will also help ensure that authorized NPDES programs and EPA are properly sharing these NPDES program data with each other. EPA is required by the rule to maintain the initial recipient list for each state and by each NPDES data group and publish this list on its Web site and in the **Federal Register**. Identification of the initial recipient for each NPDES data group is included as a new NPDES permit standard condition as is the URL to the above Web site [see 40 CFR 122.41(l)(9)]. EPA will work with authorized NPDES programs that would like more flexibility with the initial recipient designation (*e.g.,* a state may want to be designated for NOIs for CAFOs but not MS4s).

As necessary, the initial recipient designation can switch back and forth between the authorized state, tribe, or territory NPDES programs and EPA. EPA's goal is to help all authorized NPDES programs be the initial recipient for any data group (*e.g.,* DMRs) for which they would like to first receive the data.

• As of the effective date of the final rule, the Initial Recipient determination is an 'opt-out' process for authorized state, tribe, or territory NPDES programs. Per § 127.27(a), an authorized NPDES program must notify EPA within 120 days of the effective date of the final rule if it wishes EPA to be the Initial Recipient for a particular NPDES data group. If EPA receives no such notification, EPA will designate the authorized state, tribe, or territorial NPDES program as the Initial Recipient for all NPDES data groups.

• An authorized NPDES program can initially elect for EPA to be the initial recipient and then, at a later date, seek EPA approval to change the initial recipient status for one or all of the NPDES data groups from EPA to the authorized state, tribe, or territory. To make this switch, the authorized state, tribe, or territory must send a request to EPA. This request shall identify the specific NPDES data groups for which the state, tribe, or territory would like to be the initial recipient of electronic NPDES information, include a description of how its data system will be compliant with 40 CFR part 3 (including, in all cases, subpart D) and 40 CFR part 127, and the date or dates when the state, tribe, or territory will be ready to start receiving this information. Section 127.27 outlines the process for requesting the designation of initial recipient. After EPA approval of the request, EPA will update the initial recipient list and will publish the revised initial recipient listing on its Web site and in the **Federal Register**.

• An authorized NPDES program can initially elect to be the Initial Recipient for one or all of the NPDES data groups and then at a later date request that EPA become the initial recipient for one or all of the NPDES data groups. To make this switch the authorized state, tribe, or territory will send a request to EPA. After coordination with the state, EPA will update the initial recipient list and will publish the revised initial recipient listing on its Web site and in the **Federal Register** [see § 127.27(a)].

• There is also a process in § 127.27(d) for ensuring that authorized NPDES programs share the minimum set of NPDES program data with EPA (see Appendix A to 40 CFR part 127). This process will switch the initial recipient status from the authorized state, tribe, or territory to EPA if the authorized NPDES program is not sharing the minimum set of NPDES program data with EPA. As noted in the proposed § 127.27(d)(4), EPA will work with the Director of the authorized NPDES program to remediate all issues identified by EPA that prevent the authorized NPDES program from being the initial recipient. When all issues identified by EPA are determined by EPA to be satisfactorily resolved, EPA is required to update the initial recipient listing in § 127.27(c) in order to list the authorized state, tribe, or territory as the initial recipient.

An authorized NPDES program will continue to retain its responsibilities to facilitate electronic reporting even if it elects for EPA be the Initial Recipient for a particular NPDES data group. For example, an authorized NPDES program will still be expected to continue to provide support to NPDES regulated entities to facilitate electronic reporting (*e.g.,* provide registration support, electronic reporting system training and user support) even when the authorized NPDES programs elects for EPA to be the initial recipient. EPA will assist authorized NPDES programs by providing training and support to authorized NPDES programs so that they can fully understand and use EPA's electronic reporting systems and thereby provide effective support to NPDES regulated entities.

It is important to note the interaction between the CROMERR requirements and the Initial Recipient requirements in the final rule.[5] For example, if the initial recipient status for a particular state for a particular data group switches from the state to EPA, then the NPDES-regulated entities in that data group in

[5] EPA seeks to ensure that electronic reporting has at least the same level of legal defensibility and dependability as information that EPA would obtain through hard-copy paper submission. The Cross-Media Electronic Reporting Regulation (CROMERR), promulgated October 13, 2005, provides the legal framework for electronic reporting requirements established under all EPA environmental regulations (40 CFR part 3). See the proposed rule for more background detail on CROMERR (30 July 2013; 78 FR 46035).

that state would need to ensure they register with the appropriate CROMERR-compliant system. In this example, NPDES-regulated entities will switch from using the state electronic reporting systems to EPA's electronic reporting systems (*e.g.,* NetDMR, NeT). This means that these regulated entities will need to register and obtain the necessary signing credentials for EPA's electronic reporting systems. Similarly, if the initial recipient status for a particular state for a particular data group switches from EPA to the state, then those NPDES-regulated entities in that data group in that state would switch from using an EPA electronic reporting system to a state electronic reporting system. Under this scenario, regulated entities will need to register and obtain the necessary signing credentials for the authorized NPDES program's electronic reporting systems. However, if a state is using EPA's electronic reporting systems, the regulated entities would not need to register again.

2. Implementation Plan Schedule

EPA initially proposed two phases for the implementation of electronic reporting with the first phase starting one year after the effective date of the final rule and a second phase starting two years after the effective date of the final rule. EPA proposed full implementation of electronic reporting within two years after the effective date of the final rule. Many authorized NPDES programs indicated that they would likely not be able to implement electronic reporting for all data within two years of the effective date of the final rule. One commenter suggested that EPA consider working with authorized NPDES programs to develop individual state plans with a schedule for implementation based on state readiness and resources to implement electronic reporting. Other commenters suggested extending the IP beyond two years. After significant consultation with authorized NPDES programs EPA is adopting the implementation schedule described in Section VII.A.

EPA is providing additional time (five years from the effective date of the final rule) for authorized NPDES programs to switch their processing of Phase 2 NPDES program data (*e.g.,* general permit reports, program reports) from paper to electronic format in this final rule. This additional implementation time for Phase 2 data collection, management, and sharing will help authorized NPDES programs build or adopt electronic reporting systems for Phase 2 data as well as register and train NPDES regulated entities. EPA is keeping the proposed one-year schedule for the DMR data flow to be switched from paper to electronic format since nearly all authorized NPDES programs and many tens of thousands of NPDES permittees are already using NetDMR and other electronic Discharge Monitoring Report (eDMR) systems. The proposed rule also had the Federal general permit reports (NOIs, NOTs, LEWs, NOEs) included in Phase 1 implementation. These permits are now included in Phase 2 of the final rule so that the implementation is consistent for all general permits. EPA will incorporate the requirements of this final rule into re-issued general permits so that EPA can expedite electronic reporting as soon as possible.

In accordance with the final rule [40 CFR 127.26(h)], authorized NPDES programs will also need to submit an IP to EPA for EPA's review. The content of these plans must provide enough detail (*e.g.,* key tasks and end dates) to ensure successful implementation of electronic reporting for Phase 2 data. These plans must include key tasks and the related end dates necessary for implementing this final rule, such as: (1) Describing key tasks for electronically collecting all Phase 2 data from NPDES-regulated facilities (*e.g.,* developing and deploying electronic reporting systems and applications); (2) describing key tasks for updating state NPDES data systems to manage and share Phase 2 data with EPA's ICIS–NPDES (*e.g.,* adding new data elements to state NPDES data systems, updating the state's electronic data transmission capabilities, which includes incorporating new data schemas and Environmental Information Exchange Network node plug-ins); (3) CROMERR compliance status for electronic reporting systems (*e.g.,* approval dates or anticipated approval end dates for each NPDES data group); (4) schedule end dates for updating state statutes, regulations, and NPDES permits; (5) summary of outreach and training necessary to alert and educate NPDES regulated entities on how to utilize electronic reporting systems; (6) alternative options for converting to electronic reporting (*e.g.,* utilization of EPA services and systems like NetDMR or NeT) if the state continually misses its own scheduled milestones end dates; and (7) temporary and permanent waiver approval processes. EPA will provide authorized NPDES programs with additional guidance on the content of these plans after promulgation of the final rule. EPA will inform the state if its implementation plan is inadequate.

These plans should be sent to EPA within one year of the effective date of the final rule. EPA will review each IP and work with the corresponding authorized NPDES program to identify potential weaknesses and suggest potential revisions. EPA will finish its review of all IPs and inform the authorized NPDES program if its implementation plan is inadequate no later than six months after receipt. EPA plans to post these IPs on its Web site to provide the public with greater transparency on the milestones and tasks each state will be taking to move towards electronic reporting.

3. Ensuring Compliance With the Implementation Schedule

As noted in Section V.B.2, EPA is phasing in the electronic reporting requirements of this final rule over five years. In accordance with the schedule, and as a means to ''fill in the gaps'' where NPDES-regulated entities are not yet reporting electronically, EPA will use its authority, as appropriate, to issue targeted individual notices requiring NPDES-regulated entities to electronically report their NPDES program data (appendix A to 40 CFR part 127). EPA initially proposed to have these data come directly to EPA. Authorized NPDES programs suggested that instead EPA should require NPDES regulated entities to use state, tribe, or territorial electronic reporting systems that are in compliance with the final rule, as this would be more efficient. In this final rule, EPA is adopting the approach recommended by authorized NPDES programs and will use its existing authority under the CWA along with current technology and an Information Collection Request (ICR) to require NPDES-regulated entities to report electronically. EPA is using its authority under CWA sections 101, 304(i), 308, 402(b), and 501 to require NPDES-regulated entities to electronically report NPDES program data. Section 308 of the CWA authorizes EPA to require access to information necessary to carry out the objectives of the Act, including Section 402, which establishes the NPDES program. EPA provided examples in the SNPR regarding when it would use this authority to send notices to NPDES regulated entities to start electronic reporting (1 December 2014; 79 FR 71070).

EPA also notes that authorized NPDES programs can use their enforcement discretion to refrain from enforcing conditions in the permit or other control mechanisms that explicitly require paper reporting as long as the regulated entity successfully reports its data electronically using the appropriate CROMERR-approved electronic

reporting system. This would enable EPA and authorized states, tribes, and territories to realize the benefits of electronic reporting without requiring double reporting from regulated entities and coordinating two separate submissions. The following are the main methods by which electronic reporting requirements will most likely be implemented by authorized NPDES programs and NPDES regulated entities under the final rule. As shown in Table 3, authorized programs have several mechanisms to minimize the potential for dual reporting (paper and electronic submissions of the same data).

| Method | Description | Potential for dual reporting (paper and electronic) |
|---|---|---|
| Electronic Reporting Allowable in Existing NPDES Permit | Existing reporting requirements in some NPDES permits may already allow for permittees to switch to electronic reporting (*e.g.,* no explicit requirement to report DMRs on *paper* forms to the state). | No. |
| NPDES Permit Issuance | NPDES permit issuances are staggered. This means that some NPDES permits will be incorporating electronic reporting requirements before the implementation schedule deadlines. | No. |
| Enforcement Discretion | Authorized NPDES programs can issue an enforcement letter that allows NPDES permittees to forgo filing paper forms as long as they use the approved electronic reporting systems. | No. |
| Minor Modification | With the consent of the permittee, the NPDES permitting authority can incorporate electronic reporting requirements through a minor modification. This is usually done permit-by-permit but there are no restrictions on a state that would like to take one action to change multiple permits at once. These minor modifications are very specific updates and do not require public notice. The NPDES regulated entity can use these minor modifications to eliminate the potential for dual reporting (paper and electronic). | No. |
| Dual Reporting | The state can also require electronic reporting in addition to paper reporting, which is required by existing permit language. The dual reporting would last only until the permit expires and the next permit is issued with electronic reporting requirements. This is EPA's least preferred option to phase in electronic reporting. | Yes. |

Under the implementation schedule for this final rule, EPA will assess the electronic reporting participation rate of NPDES regulated entities in each state and by each data group to determine when it would be appropriate to send individual notices. For example, EPA may send individual notices to compel electronic reporting when the authorized state, tribe, or territory has less than 90-percent participation rate for one or more data groups (*e.g.,* MS4 program reports), calculated after the required time for electronic reporting of the particular data group. EPA will separately calculate the participation rate for each state and for each data group no later than six months after the deadline for conversion from paper to electronic submissions (*e.g.,* 18 months after the effective date of the final rule for DMRs). As appropriate, EPA will then send notice to the NPDES regulated entities that are not utilizing electronic reporting (*e.g.,* 21 months after the effective date of the final rule for DMRs). This notice will direct NPDES regulated entities to use their authorized NPDES program's electronic reporting system. Failure to comply with this notice will result in noncompliance with the CWA and may result in penalties. EPA will repeat its review of the participation rate for each state and for each data group on an annual basis as needed and send out notices as appropriate. EPA will coordinate the distribution of these notices with the authorized NPDES program.

EPA anticipates that it may use individual notices to compel electronic reporting will likely be minimal as electronic reporting, over the long term, reduces burden for the reporter. It is also important to note that many facilities have already made the switch to electronic reporting (*e.g.,* most DMR filers in Ohio are using Ohio's e-DMR system).

EPA solicited comment on this 90-percent participation rate metric. Commenters noted difficulties in outreach and training for the large number of NPDES-regulated entities that will need to switch from paper to electronic reporting. As described above, EPA is providing more time for

authorized NPDES programs to switch their processing of Phase 2 NPDES program data (*e.g.,* general permit reports, program reports) from paper to electronic. This additional three years will help authorized NPDES programs build or adopt electronic reporting systems for Phase 2 data as well as register and train NPDES regulated entities. EPA is keeping the proposed one-year schedule for the DMR data flow since DMR electronic reporting tools are already deployed in 42 states, with an additional six states actively developing similar systems. This existing electronic reporting capacity has allowed tens of thousands of NPDES regulated entities to electronically report their DMRs over a number of years.[6] EPA is also retaining the 90 percent participation rate as this single simple measure will be an effective system to track progress and prompt NPDES regulated entities and authorized NPDES programs to switch from paper to electronic reporting within a reasonable time period. While the 90-percent figure is not codified in the final regulation [see 40 CFR 127.26(i)], EPA is including the 90-percent figure in this preamble to the final rule and the accompanying ICR as a goal to promote electronic reporting and as a reasonable estimate of the number of entities that EPA may directly contact. EPA will work with states if there is a significant delay in the adoption of electronic reporting and re-assess the 90-percent participant rate goal as part of its ICR renewal (ICRs are typically approved by OMB for three years) or as appropriate.

Another state commenter also suggested that EPA calculate for each authorized NPDES program one DMR electronic submission participant rate for individually permitted facilities and another DMR electronic submission participant rate for facilities covered under general permits. The commenter suggested that there are important differences between individually permitted facilities, which tend to be the larger facilities with a continuous discharge like POTWs, and facilities covered under general permits, which tend to be more numerous. Some authorized NPDES programs also use different agencies to manage specific industrial sectors (*e.g.,* oil and gas facilities, mines, CAFOs) and these industrial sectors are often covered by general permits. EPA agrees with the commenters that there are important differences between individually permitted facilities and facilities covered by general permits. Having one DMR electronic submission participant rate for individually permitted facilities and another DMR electronic submission participant rate for facilities covered under general permits will allow EPA to more accurately target only those facilities and sectors with the poorest electronic reporting participation rates. In this final rule, EPA is adopting the approach recommended by some authorized NPDES programs and will use one DMR electronic submission participant rate for individually permitted facilities and another DMR electronic submission participant rate for facilities covered under general permits.

EPA will also work with states to evaluate how best to assess electronic reporting participation for general permit reports (*e.g.,* NOIs) for different sectors (*e.g.,* oil and gas facilities, mines, CAFOs). The authorized NPDES program will document how to assess electronic reporting participation rates for general permit reports in their IP.

Another important consideration is that NPDES-regulated entities with temporary waivers are excluded from the participation calculations. For example, if state X has 1,020 individually permitted facilities that are required to submit DMRs and 20 of these facilities are granted temporary waivers from electronic reporting, then as a group at least 900 of the 1,000 individually-permitted facilities without waivers [$= 0.9 \times (1{,}020 - 20)$] need to electronically submit DMRs to state X in order to meet the 90-percent participation rate. Examples of how EPA will use individual notices to ''fill in the gaps'' where NPDES-regulated entities are not yet fully electronically reporting their NPDES program data are provided in the supplemental notice to the proposed rule (1 December 2014; 79 FR 71070) and more examples are in the docket (see DCN 0106).

4. Hybrid Approach for Construction Stormwater NOIs

As an alternative to use of a CROMERR-compliant electronic reporting system, one commenter suggested that EPA allow the initial recipient the option of using data capture technology [*e.g.,* two dimensional barcodes such as Quick Response (QR) codes, optical character recognition] (see DCN 0178). In particular, authorized NPDES programs have noted their difficulty in getting construction operators to apply for and maintain electronic signatures for use with CROMERR-compliant electronic reporting systems for stormwater related discharges. Authorized NPDES programs suggested that EPA provide some flexibility in the final rule that would allow construction operators the ability to electronically submit data from construction stormwater general permit reports [*e.g.,* Notice of Intent (NOI) to discharge; Notice of Termination (NOT); and Low Erosivity Waiver and Other Waivers from Stormwater Controls (LEW)] but without an electronic signature. EPA solicited comment on this approach in the supplemental notice to the proposed rule (1 December 2014; 79 FR 71076). Several comments expressed support for EPA to include this option in the final rule as a means to provide authorized NPDES programs with more options in implementing the final rule. In this final rule, EPA is providing the option for the initial recipient to use data capture technology for construction stormwater general permit reports (*i.e.,* NOIs, NOTs, NOEs, LEWs). The following discussion provides more detail on this optional method for authorized NPDES programs to comply with this final rule for construction stormwater general permit reports.

The final rule provides the initial recipient the option of allowing data capture technologies for construction stormwater general permit reports. This is defined in the final rule as the ''Hybrid Approach.'' For example, under the Hybrid Approach, the initial recipient may allow construction operators to complete an online construction stormwater general permit report, which simultaneously produces a paper copy of the report and electronically transmits a copy of the data from the report to the initial recipient. The construction operator will sign and date the paper copy of the construction stormwater general permit report with a handwritten signature and this paper document will be the ''copy of record.'' The paper document will be managed in accordance with 40 CFR 122.28. It is important to note that EPA general permit regulations (40 CFR 122.28) do not require all general permit covered facilities to submit NOIs for all general permits as some general permits provide for automatic coverage. The final rule does not change EPA's general permit regulations with respect to the discretion of the authorized NPDES program in deciding when a notice of intent requirement would be inappropriate [see 40 CFR 122.28(b)(2)(v)]. Under the Hybrid Approach, the paper copy of the construction stormwater general permit report with a handwritten signature must be submitted to the authorized NPDES program.

[6] *See: https://netdmr.zendesk.com/entries/45318090-For-New-Users-Who-Can-Report-.*

Under the Hybrid Approach, the initial recipient must have the ability to definitively and uniquely link the signed and dated paper document with the electronic submission from the NPDES regulated entity. This could be done through use of a unique code or mark on the signed and dated paper document that is also embedded in the electronic submission. See Figure 1.

**Figure 1:** Hybrid Approach Example for Construction Stormwater Permits: Use of QR Code

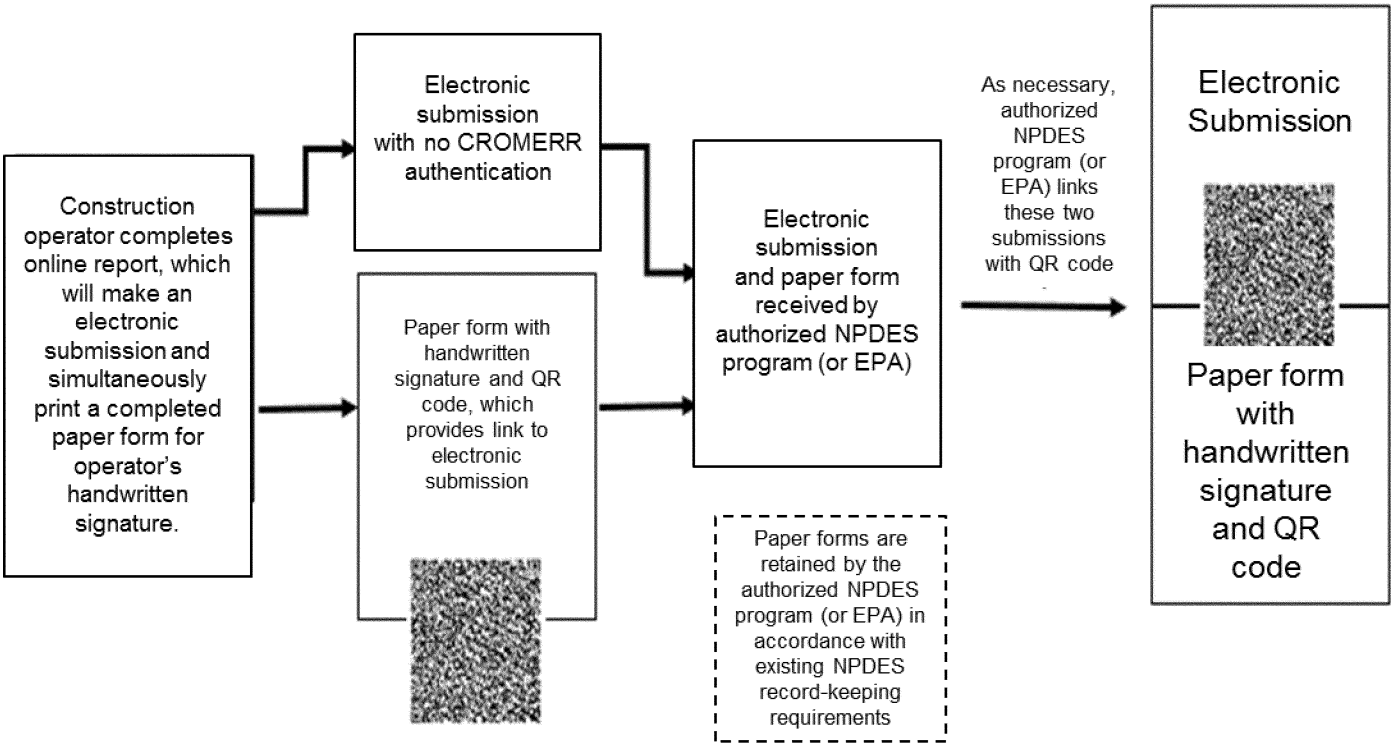


Under the Hybrid Approach, the initial recipient can also use automated data capture technology (*e.g.,* Optical Character Recognition) to allow a NPDES-regulated entity to submit NPDES program data on paper with a handwritten signature and date in a structured format that allows for easy data importation into the authorized program's NPDES data system. It is likely in this example that the initial recipient will also be the authorized state, tribe, or territory since the paper form will be sent by the construction operator to the authorized NPDES program.

EPA notes that using the Hybrid Approach will require the procurement and management of the necessary data capture technology, maintenance of the signed and dated paper submission, and the training of potential users; however, some authorized NPDES programs have suggested the Hybrid Approach may be less burdensome than requiring all construction operators to register and submit using standard CROMERR-compliant identity-proofing and electronic reporting services.

Finally, EPA notes that it is limiting this approach to the construction sector due to the large and transient number of permittees that are reporting each year for new locations (approximately 200,000 new construction sites each year). Use of the Hybrid Approach eliminates the need for construction operators to obtain and maintain a digital signature and the need for authorized NPDES programs to oversee and troubleshoot the process for these construction operators to obtain these digital signatures.

EPA encourages state, local, or municipal government that make the Hybrid Approach available to regulated entities in the construction sector to also make CROMERR-complaint, fully-electronic reporting available as well, reducing to the degree possible any reliance on paper.

*C. Waivers*

In the preamble to the proposed rule, EPA introduced the concept of temporary waivers from electronic reporting of NPDES program data. EPA proposed to limit the availability of these temporary waivers to regulated facilities in areas that lacked sufficient broadband availability. Under the proposal, temporary waivers would be available for one year at a time. Authorized NPDES programs would be required to enter the hard-copy NPDES program data submitted by facilities with waivers into the state or federal NPDES data system and share it with EPA. EPA requested comment on the need for such temporary waivers, possible options for such waivers, and on the possibility of permanent waivers for religious reasons.

1. Temporary Waivers

During the two public comment periods, EPA received several comments on temporary waivers. The majority of the comments on this topic supported the overall concept of temporary waivers from NPDES electronic reporting. Commenters expressed support for waivers that would have a longer duration than the one-year renewable timeframe identified in the proposed rule. Several commenters suggested that waivers should also be

made available for certain circumstances beyond broadband availability issues, such as undue burden or cost to the authorized NPDES program. For example, it may be more efficient for the state to manually enter data into an electronic system, than to train a NPDES regulated entity when there are numerically few of a certain category of permittees or when the sector is known to have limited computer skills even if the entity potentially has access to broadband internet.

In the final rule, EPA is providing authorized NPDES programs with more flexibility in how they may grant temporary waivers. Per § 127.15 of the final rule, each authorized NPDES program will describe in its IP how it will implement the NPDES Electronic Reporting Rule waiver provision. Authorized NPDES programs will review and update, as necessary, their implementation of the NPDES Electronic Reporting Rule waiver provision once every five years and submit any changes to EPA for review. EPA will inform the state if its waiver process description is inadequate. The duration of a temporary waiver may not exceed five years, which is the normal period for an NPDES permit term. EPA also notes that these waivers are not transferrable.

Additionally, authorized NPDES programs may issue episodic waivers to address large-scale national disasters (*e.g.,* hurricanes) or prolonged electronic reporting system outages (*i.e.,* outages longer than 96 hours). The authorized NPDES program will describe in the IP how it plans to issue episodic waivers in these extreme situations as part of its implementation of the NPDES Electronic Reporting Rule waiver provision.

2. Permanent Waivers

Commenters suggested that EPA should make permanent waivers for NPDES-regulated entities owned or operated by members of religious communities (*e.g.,* Amish, Mennonite, and Hutterite). EPA agrees that it would be appropriate for the final rule to accommodate the religious practices of individuals that choose not to use certain technologies (*e.g.,* computers, electricity) in accordance with their religion. In the final rule, authorized NPDES programs may issue permanent waivers to facilities owned or operated by members of religious communities that choose not to use certain technologies. Authorized NPDES programs will document their procedures for issuing permanent waivers as part of their implementation of the NPDES Electronic Reporting Rule waiver provision, which is described above. EPA notes that a NPDES regulated entity will need to re-apply for a permanent waiver upon any change in facility ownership and that these waivers are not transferrable.

*D. Summary of Changes to Appendix A*

Appendix A to the final rule (40 CFR part 127) is the minimum set of NPDES program data that must be electronically collected, managed, and shared between NPDES-regulated facilities, authorized NPDES programs, and EPA.[7] Authorized programs that are the ''initial recipient'' of these data must electronically transfer these data to EPA on a regular schedule (within 40 days of completed action). EPA worked extensively with NPDES program experts from across the Agency and with authorized NPDES programs to develop and refine Appendix A. The purpose of Appendix A is to ensure that there is consistent and complete reporting nationwide, and to expedite the collection and processing of the data, thereby reducing burden and making the data more timely, accurate, complete, useful, and transparent for everyone. EPA recognizes that there may be certain instances where appendix A data do not apply directly to particular permitted activities as written and will work with states to accommodate any necessary differences. For instance, there may not be a fixed address for the application of pesticides, so, in this instance, the NOI may not include facility physical address, latitude, and longitude information as described in Appendix A, but would likely contain equivalent information as required by the permit.

When reviewing the list of Appendix A data elements, it is important to note the following concepts:

- *Frequency:* Reporting frequency varies based on the type of data (*e.g.,* permit issuance would likely be every five years; DMR data may be monthly).
- *Applicability:* Many of the data elements are only applicable to certain NPDES sectors (*e.g.,* CAFO data elements do not apply to POTWs).
- *Efficiency:* Many of the data elements use codes or unique descriptions to facilitate easier data entry.

These concepts highlight the fact that there is a direct relationship between the amount of data that will be reported, collected, and managed and the overall burden of the rulemaking. The amount of data generated by each data element is directly tied to how frequently the data element is reported, the number of regulated entities that are covered by the data element (*i.e.,* applicability), and the ease of reporting (*i.e.,* efficiency). The amount of data generated by a data element directly increases with more frequent data reporting of the data element, more entities subject to the data element, and decreases with simplified data reporting (*e.g.,* using text fields instead of use of codes or unique descriptions, which facilitate easier data entry). Consequently, it is important to focus on the amount of data that will be collected by this final rule and not the number of data elements listed in appendix A. EPA used the following process to create the initial draft of appendix A:

- Identify current candidate reports and information from authorized NPDES programs and NPDES regulated entities that are practical to standardize and electronically process and have important value to the permitting and compliance and enforcement programs and the public.
- Identify the required data elements for each candidate data flow and report based on the CWA or existing EPA regulations.
- Minimize the number of data elements to create efficiencies without losing the utility of the data.

During 2014 and 2015, EPA met with state technical experts to discuss all the data elements in appendix A. EPA summarized these discussions for the Docket (see DCN 0128 to 0142, 0181, 0219 to 0229).

In general, EPA simplified appendix A to help make implementation of the final rule easier for authorized NPDES programs and NPDES regulated entities. The data elements in appendix A support the electronic collection, management, and sharing of Phase 1 and Phase 2 data.

EPA also noted that authorized NPDES programs can require NPDES regulated entities to submit more data than what is listed in appendix A. The authorized NPDES program can require NPDES regulated entities to submit these ''non-appendix A'' data on paper, electronically, or as attachments (*e.g.,* PDF files, CSV files) to electronic notices and reports filed in compliance with this final rule. Some commenters requested clarification on how EPA's electronic reporting tools will be configured to separately handle appendix A and non-appendix A data. EPA's electronic reporting tools allow for non-Appendix A data to be collected and shared with authorized NPDES programs. EPA will continue to work

[7] Authorized NPDES programs may grant electronic reporting waivers to NPDES-regulated facilities. In these cases, states perform the data entry from the paper submissions.

with authorized NPDES programs to configure these data systems such that the non-appendix A data are collected in the format needed by the authorized NPDES program. These implementation efforts will ensure that NPDES regulated entities only need to make one electronic submission with EPA's electronic reporting tools and that these submissions may contain a mix of appendix A and non-appendix A data. EPA will work with authorized NPDES programs that build their own electronic reporting tools to ensure that their tools have similar capabilities.

*E. Unpermitted Facilities*

Current EPA regulations and policy set forth expectations for authorized NPDES programs to provide compliance monitoring data on all permitted facilities, both major and nonmajor facilities, and a limited group of unpermitted facilities. See 40 CFR 123.41, DCN 0007, DCN 0037, and DCN 0188. Under the 2014 Clean Water Act National Pollutant Discharge Elimination System Compliance Monitoring Strategy (''2014 CMS''), authorized NPDES programs can propose an alternative Compliance Monitoring Strategy (CMS) plan, which may include the state's plan to conduct ''focused inspections'' or ''off-site desk audits'' instead of ''comprehensive inspections'' for certain facilities (see DCN 0188). An alternative NPDES CMS plan is a plan that includes one or more compliance monitoring commitments that deviate from the national goals and flexibilities (see Part 2 of the 2014 CMS for detailed description of the national goals). As compared to the national goals, an alternative plan could include modified frequency of comprehensive inspections, modified compliance monitoring activities (*e.g.,* offsite desk audit), or a combination of the two. As a condition for EPA approval of the alternative CMS plan, the state must commit to share with EPA's ICIS-NPDES compliance monitoring data on all facilities (including unpermitted facilities) subject to a ''focused inspection'' or an ''off-site desk audit'' instead of ''comprehensive inspection'' (see Part 1 of the 2014 CMS). Additionally, EPA regulations require authorized NPDES programs to share compliance monitoring data with EPA on unpermitted facilities found to be in violation of the Clean Water Act (*e.g.,* discharging without an NPDES permit) (see 40 CFR 123.41).

This final rule does not change the existing requirements for NPDES programs to report information on certain unpermitted facilities to EPA. See 40 CFR 123.41(a); 123.43(d). In order to provide clarity, the following examples clarify when authorized NPDES programs are required to share NPDES program data on unpermitted facilities with EPA by entering these data in to EPA's national NPDES data system (*i.e.,* ICIS-NPDES).

*Example #1:* As part of an approved alternative CMS plan, an authorized NPDES program evaluated ten unpermitted facilities with a focused inspection or an off-site desk audit. As a condition of EPA's approval of the alternative CMS plan, the authorized NPDES program is required to share NPDES program data on these ten unpermitted facilities with EPA by entering these data in to EPA's national NPDES data system (*i.e.,* ICIS-NPDES).

*Example #2:* The same authorized NPDES program in Example #1 responds to a citizen complaint of an unpermitted facility by conducting an inspection of the unpermitted facility. This inspection is not part of the authorized NPDES program's approved alternative CMS plan. The authorized NPDES program determines that this unpermitted facility is discharging pollutants to waters of the U.S. without an NPDES permit in violation of the CWA. In accordance with this rule, the authorized NPDES program is required to share NPDES program data on this unpermitted facility with EPA by entering these data in to EPA's national NPDES data system (*i.e.,* ICIS-NPDES).

*Example #3:* The same authorized NPDES program in Example #1 responds to a citizen complaint of another unpermitted facility by conducting an inspection of the unpermitted facility. This inspection is not part of the authorized NPDES program's approved alternative CMS plan. The state determines that this unpermitted facility is not in violation of the CWA. The authorized NPDES program is not required to share NPDES program data on this unpermitted facility with EPA's national NPDES data system (*i.e.,* ICIS-NPDES).

*Example #4:* An authorized NPDES program responds to a citizen complaint of an unpermitted facility by conducting an inspection of the unpermitted facility. The inspection is not conducted pursuant to the authorized NPDES program's approved CMS plan. The authorized NPDES program determines that this unpermitted facility is discharging pollutants to waters of the U.S. without an NPDES permit in violation of the CWA. In accordance with this rule, the authorized NPDES program is required to share NPDES program data on this unpermitted facility with EPA by entering these data in to EPA's national NPDES data system (*i.e.,* ICIS-NPDES).

*Example #5:* The same authorized NPDES program in Example #4 responds to a citizen complaint of another unpermitted facility. The inspection is not conducted pursuant to the authorized NPDES program's approved CMS plan. The state determines that this unpermitted facility is not in violation of the CWA. The authorized NPDES program is not required to share NPDES program data on this unpermitted facility with EPA's national NPDES data system (*i.e.,* ICIS-NPDES).

*Example #6:* An authorized NPDES program inspects a facility with both an NPDES permit and state groundwater protection permit. During a compliance monitoring activity the inspector does not evaluate compliance with the NPDES permit but does determine that the facility is in violation of several state groundwater permit requirements (*i.e.,* these violations are not violations of the CWA). The authorized NPDES program is not required to share NPDES program data from this compliance monitoring activity on this facility with EPA's national NPDES data system (*i.e.,* ICIS-NPDES) because it was not an NPDES program inspection.

*Example #7:* An authorized NPDES program performs a comprehensive inspection of an unpermitted facility to determine if it is discharging without an NPDES permit. The inspection is conducted pursuant to the authorized NPDES program's approved CMS plan. During the comprehensive inspection the authorized NPDES program determines that the unpermitted facility is violating two state permit requirements; however, the authorized NPDES program also determines that the unpermitted facility is not violating the CWA. The authorized NPDES program is not required to share NPDES program data on this unpermitted facility with EPA's national NPDES data system (*i.e.,* ICIS-NPDES).

In summary, the final rule does not require authorized NPDES programs to share NPDES program data on unpermitted facilities with EPA's national NPDES data system (*i.e.,* ICIS-NPDES) with the following exceptions:

a. The approved alternative CMS plan includes compliance monitoring of unpermitted facilities through use of a ''focused inspection'' or an ''off-site desk audit'' instead of a ''comprehensive inspection.''

b. Unpermitted facilities were subject to compliance monitoring and found to be in violation of the CWA (*e.g.,* discharging pollutants to waters of the

U.S.) and thus required to have an NPDES permit.

c. Unpermitted facilities were subject to a formal enforcement action, an administrative penalty order, or an informal enforcement action (if such informal action addressed significant noncompliance).

d. Authorized NPDES programs must share with EPA NPDES program data on industrial users regulated by the Federal pretreatment program (40 CFR part 403).

e. Authorized NPDES programs must share with EPA NPDES program data on entities regulated by the Federal biosolids program (40 CFR part 503).

Basic facility data on these unpermitted facilities and the related compliance monitoring data must be shared with EPA's national NPDES data system (*i.e.,* ICIS-NPDES). For the first three types of exceptions identified above, EPA Regions, authorized states, tribes, and territories would be required to electronically provide the following information to EPA's national NPDES data system: basic facility information; compliance monitoring related information; and, if applicable, violations, and information regarding enforcement actions.

Facilities included in the fourth group would be operating under a control mechanism, which may or may not be a permit (see 40 CFR 403.8). In accordance with the final rule, these facilities will electronically submit their bi-annual compliance reports [40 CFR 403.12(e) and (h)] to their Control Authority (when the state or EPA is the Control Authority). Additionally, the Control Authority will summarize the compliance and enforcement action data for industrial users as part of the Pretreatment Program Report [40 CFR 403.12(i)].

Facilities included in the fifth group would be operating under EPA's Standards for the Use or Disposal of Sewage Sludge (40 CFR part 503), which are directly applicable to ''any person who prepares sewage sludge, applies sewage sludge to the land or fires sewage sludge in a sewage sludge incinerator and to the owner/operator of a surface disposal site'' (see 40 CFR 503.1). This means that the annual reporting requirements in 40 CFR 503.18, 503.28, and 503.48 are applicable even in the absence of an NPDES permit.

*F. Nonmajor Facility Inspection Single Event Violation (SEV) Data*

Single Event Violations (SEVs) include one-time events as well as violations with longer durations. These are violations that are generally not automatically flagged by the data system (*e.g.,* inspection identified violations, sewer overflow, spill of industrial waste, discharges without an NPDES permit). These violation determinations are often manually generated by the authorized NPDES program as opposed to violations that can be system created or generated (*e.g.,* effluent exceedances of permit limits are automatically flagged by ICIS-NPDES).

SEV data are generated from inspection reports and other compliance monitoring activities by authorized NPDES programs. Currently approximately ten percent of facilities designated as majors in ICIS-NPDES have a SEV in any given year. These are important violations that are not automatically identified through self-monitoring data like DMRs, and these data are important for targeting, transparency, and state oversight. The availability of such compliance determination information from states, tribes, territories, and EPA is critical to determining the compliance status of NPDES regulated facilities. This information is needed on a facility-specific basis to better identify potential problems; ensure that appropriate action is taken to address noncompliance; better quantify national or state noncompliance rates; and to provide a more complete and transparent picture to permitting authorities, the public, Congress, and other stakeholders of the overall implementation and effectiveness of the authorized NPDES program. There are two to three data elements associated with SEVs:

- Violation Code (this uniquely identifies the type of violation)
- Date Data which includes: Single Event Violation Date (used when violation occurs on one date) or Single Event Violation Start Date and Single Event Violation End Date (used when violation spans multiple dates)

Prior to this final rule, EPA only required authorized NPDES programs to share with EPA SEV data on facilities designated as majors. In the proposed rule, EPA discussed requiring authorized NPDES programs to also share with EPA SEV data on facilities designated as nonmajors (see 30 July 2013; 78 FR 46041). EPA received comments from authorized NPDES programs suggesting that EPA rely on the Performance Partnership Agreements (PPA) and Performance Partnership Grants (PPG) process to manage SEV data sharing expectations.[8] EPA has decided not to use the PPA and PPG process to manage SEV data sharing between authorized NPDES programs and EPA for the following reasons.

PPAs and PPGs are often voluntary and all authorized NPDES programs use these documents to govern data sharing between authorized NPDES programs and EPA. Several states with PPAs have not updated them since the mid to late 1990s, and the degree of specificity of PPA commitments such as data entry, inspections, and enforcement actions varies widely. This highly variable, voluntary process is not sufficient to encourage and evaluate national consistency in meeting national program expectations for NPDES data entry and tracking, compliance evaluations and determinations, and timely and appropriate enforcement response.

Additionally, an authorized NPDES program is only required to share with EPA SEV data from a construction stormwater inspection when the authorized NPDES program also issues a formal enforcement action against the inspected construction site. As noted in the proposal, EPA made this distinction based on the large number of facilities in this segment of the NPDES universe (approximately new 200,000 construction sites each year). This distinction is made in appendix A to 40 CFR part 127.

Finally, EPA notes that data from some SEVs will be self-reported by the permitted facilities. For example, a sewer overflow is an SEV but the permittee will be collecting and electronically sharing these data with the permitting authority (*i.e.,* it will be the permittee that will electronically report these SEV data to the authorized NPDES program who will then electronically share these data with EPA). There are similar examples of permitted facilities reporting on SEVs in other program reports (*e.g.,* CAFO Annual Report, Biosolids Annual Report). EPA has included in the Economic Analysis and Information Collection Request supporting the final rule the cost and burden of expanding the requirement on authorized NPDES programs to share with EPA SEV data on nonmajors (see DCN 0197).

[8] Individual PPAs can range from general statement about how the state and EPA will work together as partners (perhaps identifying joint priorities that will be addressed) to comprehensive, multi-program documents that detail each party's roles and responsibilities. Some PPAs meet relevant statutory and regulatory requirements and also serve as the work plans for Performance Partnership Grants (PPGs) or other EPA grants. In a few cases, the PPA contains a more general discussion of the working relationship between EPA and the state rather than a discussion of priorities and programs.

## VI. Economic Analysis

### *A. Regulatory Requirements Addressed by the Economic Analysis*

Executive Order 12866 directs federal agencies to perform an economic analysis (EA) to give decision makers information to determine that there is a need for the rule and that benefits of the rule justify the costs of the rule. Further, Executive Order 12866 requires that the rule maximize the net benefits to society, be cost effective and be based on the best reasonably obtainable information.[9] E.O. 12866 defines the threshold for economically significant rules as one that is expected to create impacts to the economy of $100 million or more or otherwise adversely affect the economy, a sector of the economy, productivity, competition, jobs, the environment, public health or safety, or State, local, or tribal governments or communities in a material way.[10] The EA also addresses the requirements of the Unfunded Mandates Reform Act (UMRA) and the Regulatory Flexibility Act (RFA).

The Regulatory Flexibility Act (RFA) of 1980 (5 U.S.C. 601 *et seq.*) requires Federal agencies to review their proposed rules and regulations to determine if they will have ''a significant economic impact on a substantial number'' of small entities. But the RFA does not define ''significant economic impact'' or ''substantial number.'' In its regulatory flexibility analysis EPA adopted the Small Business Administration's (SBA) definition of small entities, and used a threshold of 1% of revenue to determine economic significance. Using the SBA definition, EPA estimated that 108,000 small entities would incur costs under the final rule.[11]

EPA estimates initial implementation costs for the regulated facilities to be no more than $314 per facility, with an additional intermittently recurring cost of approximately $6 for some permittees. EPA also estimates that a limited number of small entities might be required to report both electronically and on paper to their permitting authority during the first five years after the effective date of the rule, each incurring as much as $86 in additional annual costs. Only one entity is expected to incur a cost impact of 1% or greater associated with the annualized compliance costs resulting from the final rule. While impacts of greater than 1% are estimated to be incurred by one entity due to the rule, impacts of greater than 1% are incurred by far fewer than 100 small entities and considerably less than 20% of all small entities for all sectors and for each sector individually. Therefore, following EPA guidance on assessment of the rule's direct adverse impact on any small entities, the rule is not expected to significantly impact a substantial number of small entities.

### *B. Economic Significance of This Rule*

According to the threshold set out in E.O. 12866, this final rule is not economically significant. The threshold for a finding of economic significance is an annual effect, either costs or savings, of $100 million annually. EPA estimates the largest annual economic impacts to be $74.4 million in net costs during the first year after the effective date of the rule [Year 0 in Table 4–16: Schedule of Savings and Costs (3% Discount Rate) and Table 4–17: Schedule of Savings and Costs (7% Discount Rate), see DCN 097]. EPA also estimates $24.3 million in net savings five years after the effective date of the rule [Year 5 in Table 4–16: Schedule of Savings and Costs (3% Discount Rate), see DCN 0197].

Although this rule does not meet the economic significance threshold, this economic analysis includes most of the elements that would be required if the threshold were met—a statement of the need for the rule, an examination of alternatives, and the costs and benefits. The statement of need is located in Section II, and a description of the alternative approaches that were considered is located at Section IV. The non-monetary benefits were discussed in the first portion of Section VI. The balance of this section summarizes the estimated savings and costs of the selected approach.

### *C. Description of Key Factors Used in the Economic Analysis*

The final rule would reduce the data entry burden on the states, tribes, and territories while increasing the percentage of the NPDES universe for which data are available electronically. Compared to the current reporting guidance, known as WENDB, the rule would reduce the data entry burden on states, tribes, and territories, increase the number of NPDES-regulated facilities for which NPDES data is available to EPA, and expand the scope of the available data for all NPDES-regulated facilities covered by this rule.

The main elements of this EA are the reporting universe, reporting frequencies, required data, changes in who reports the data, systems and infrastructure changes to make the reporting possible, and the schedule for implementation.

(a) Estimated Universe of Potentially Affected Permittees

This rule would change the universe of permit types for which EPA will receive data. As described in Section II, the current reporting guidance instructs the states to provide EPA with data on the major dischargers (6,800 permittees) and nonmajor dischargers with individual permits (approximately 40,000 permittees). Some states provide data on a larger section of the permittee universe.

Under the final rule, EPA would receive data on the entire permittee universe (approximately 400,000 permittees including pesticides applicators and vessels), as represented in Table 4.

[9] Economic Analysis of Federal Regulations Under Executive Order 12866, Office of Management and Budget, January 11, 1996, DCN 0064.

[10] Id.

[11] Note that fewer facilities are considered in the small entity analysis (164,093 unique facilities, reflecting the number of facilities in ICIS-NPDES at the time of this analysis) than were estimated in Chapter Two of the EA (393,359 unique facilities) due to data limitations. As a result, the estimated number of small entities incurring costs under the rule is likely underestimated. However, the assumption is made that facilities affected by the rule but not currently in ICIS-NPDES will experience small entity impacts similar to the facilities currently in ICIS-NPDES. See the Economic Analysis for the Final Rule for more details.

TABLE 4—UNIVERSE OF NPDES PERMITS

| NPDES Subprogram | Number of NPDES permits | | |
|---|---|---|---|
| | Individual majors | Individual nonmajors | General nonmajors |
| **Non-POTWs (Industrial, Agriculture, and Stormwater)** | | | |
| Standard Industrial Dischargers (may also file CWA section 316(b) data) | 1,683 | 18,993 | [a] 118,073 |
| **CWA section 316(b) Filers** | | | |
| Permits with Cooling Water Intake Data | 1,171 | 0 | 0 |
| Permits with Thermal Variance Data | 554 | 0 | 0 |
| Industrial Facilities Submitting CWA section 316(b) Annual Reports | 200 | 0 | 0 |
| **Significant Industrial Users (SIUs)** [b] | | | |
| SIUs in Municipalities with Pretreatment Program | 0 | 29,060 | 0 |
| SIUs in Municipalities without Pretreatment Program | 0 | 2,487 | 0 |
| Concentrated Animal Feeding Operations | 0 | 1,266 | 5,291 |
| **Industrial and Construction Stormwater** | | | |
| Industrial | 132 | 563 | 92,282 |
| Construction | 1 | 638 | 243,227 |
| **Municipal Stormwater** [c] | | | |
| Phase I municipal separate storm sewer systems (MS4s) | 249 | 0 | 9 |
| Phase II MS4s | 0 | 204 | 5,093 |
| **POTWs and TWTDSs (may have a CSS or a SSS, may also file more than one report)** | | | |
| POTWs with Combined Sewer Systems (CSSs) [d] | 462 | 244 | 68 |
| POTWs with Sanitary Sewer Systems (SSSs) only [d] | 3,533 | 9,197 | 1,281 |
| TWTDSs | 779 | 7,510 | 655 |
| **POTW NPDES Report Filers** | | | |
| Biosolids/Sewage Sludge Report Filers | 4,209 | 694 | 0 |
| Pretreatment Program Report Filers | 1,462 | 114 | 0 |
| Sewer Overflow Event Report Filers [d] | 4,774 | 16,950 | 2,003 |

[a] Includes 9,125 pesticide applicators and 63,000 vessels that are already filing electronically.
[b] These industrial facilities discharge to POTWs and are regulated by the NPDES program through EPA's General Pretreatment Regulations (40 CFR part 403) and Categorical Pretreatment Standards (40 CFR parts 405 through 471). They do not have NPDES permits, but those in municipalities without pretreatment programs would report electronically under the rule.
[c] Nearly all Phase I MS4s are individually permitted facilities. For purposes of cost estimating, the analysis treats all individually permitted Phase I MS4s as majors and all Phase II MS4s as nonmajors.
[d] The analysis divides the total universe of POTWs into CSSs and SSSs and treats those that are only partially composed of CSSs as CSSs.

Table 4 shows the types and estimated numbers of permits in each of the applicable categories. Note, however, that some facilities have reporting requirements under more than one subprogram, in which case they are counted in each applicable group because that is the basis for regulation and reporting. Specifically, CWA section 316(b) filers are a subset of standard industrial dischargers and POTW NPDES report filers are a subset of the group of POTWs and TWTDSs. Also note that SIUs do not have a NPDES permit but are included in the EA.

Changes in the reportable universe affect virtually every aspect of the EA, including data entry costs, training costs, the need for electronic signatures and system registration, savings in paper and postage, and the potential impact of dual reporting. The majority of the savings due to the final rule result from electronic reporting of DMRs. Note, however, that not all of the regulated entities enumerated in Table 4 submit DMRs. To clarify this point, Table 5 shows the number of filers under each subprogram for each type of report, including DMRs.

TABLE 5—NUMBER OF FILERS BY NPDES SUBPROGRAM AND REPORT TYPE

| Subprogram | Permit type | NOI filers | DMR filers | Program report filers |
|---|---|---|---|---|
| **Non-POTWs (Industrial, Agriculture, and Stormwater)** | | | | |
| Standard Industrial Dischargers | Individual Major | 0 | 1,683 | 0 |
| | Individual Nonmajor | 0 | 18,993 | 0 |
| | General Nonmajor | 45,948 | 41,353 | 0 |
| CWA section 316(b) Filers [a] | | 0 | 0 | 200 |
| Significant Industrial Users (SIUs) In Municipalities without Pretreatment Program [b] | | 0 | 0 | 2,487 |
| Concentrated Animal Feeding Operations | Individual Nonmajor | 0 | 0 | 1,266 |
| | General Nonmajor | 5,291 | 0 | 5,291 |
| **Industrial & Construction Stormwater** | | | | |
| Industrial | Individual Major | 0 | 132 | 0 |
| | Individual Nonmajor | 0 | 563 | 0 |
| | General Nonmajor | 92,282 | 92,282 | 0 |
| Construction | Individual Major | 0 | 0 | 0 |
| | Individual Nonmajor | 0 | 6 | 0 |
| | General Nonmajor | [c] 83,871 | 2,432 | 0 |
| **Municipal Stormwater [d]** | | | | |
| Phase I MS4s | Individual Major | 0 | 249 | 249 |
| | General Nonmajor | 9 | 9 | 9 |
| Phase II MS4s | Individual Nonmajor | 0 | 0 | 204 |
| | General Nonmajor | 5,093 | 0 | 5,093 |
| **POTWs and TWTDSs (may have a CSS or a SSS, may also file more than one report)** | | | | |
| POTWs with CSSs [e] | Individual Major | 0 | 462 | [f] 462 |
| | Individual Nonmajor | 0 | 244 | [f] 244 |
| | General Nonmajor | 68 | 68 | [f] 68 |
| POTWs with SSSs only and TWTDSs [e] | Individual Major | 0 | 4,312 | [f] 4,312 |
| | Individual Nonmajor | 0 | 16,706 | [f] 16,706 |
| | General Nonmajor | 1,935 | 1,935 | [f] 1,935 |
| **POTW NPDES Report Filers** | | | | |
| Biosolids/Sewage Sludge Report Filers [a] | Individual Major | 0 | 0 | 4,209 |
| | Individual Nonmajor | 0 | 0 | 694 |
| Pretreatment Program Report Filers | Individual Major | 0 | 1,462 | 1,462 |
| | Individual Nonmajor | 0 | 114 | 114 |

[a] DMR filings by these facilities are captured by CSS POTWs, SSS POTWs, TWTDSs, or standard industrial dischargers.
[b] These industrial facilities discharge to POTWs and are regulated by the NPDES program through EPA's General Pretreatment Regulations (40 CFR part 403) and Categorical Pretreatment Standards (40 CFR parts 405 through 471). They do not have NPDES permits, but those in municipalities without pretreatment programs would report electronically under the rule.
[c] Assumes 2.9 construction stormwater general permits per firm.
[d] Nearly all Phase I MS4s are individually permitted facilities. For purposes of cost estimating, the analysis treats all individually permitted Phase I MS4s as majors and all Phase II MS4s and nonmajors.
[e] The analysis divides the total universe of POTWs into CSSs and SSSs and treats those that are only partially composed of CSSs as CSSs.
[f] Accounts for the submission of sewer overflow and bypass event reports.

(b) Data Elements and Data Systems

Section V describes how and why the inventory of reportable data is changed by this rule. For the EA, the biggest impacts of the change in reportable data are the costs of enhancing the database structures to store the additional data and the costs of data entry. Estimating the cost of modifying the databases involves several factors, chiefly the number of additional data elements, the number of NPDES data groups those data elements fall into (*e.g.,* DMR, CAFO Annual Report), the number of data entry screens that will be needed, and the completeness of various state, tribe, territory, and EPA data systems prior to the final rule.

Based on the number of data elements and their planned structure, EPA developed a detailed estimate of its own costs to modify ICIS to accommodate the additional data elements. Because EPA does not have independent estimates of the comparable system costs for each state, tribe, and territory, EPA's estimate of system costs for those NPDES-authorized programs is based on EPA's costs to modify ICIS.

Data entry costs are one of the major aspects of the EA, and involve several additional factors, such as who generates the data, changes in the need for the states, tribes, and territories to enter permittee-created data into an information system, the number of permittees to which each data element applies, the frequency with which each type of data element is reported, the time required to enter each type of data element, and the labor costs associated with data entry.

(c) Responsibility for Creating Data

''Responsibility for creating data'' refers to the act of initially determining the value of any particular required data element and writing it on paper or entering it into an electronic storage system. Each data element required by this rule has exactly one creator, although the identity of the creator can be affected by the nature of the permit. For example, DMR data is always created by a permittee, and enforcement data is always created by the permitting authority, but basic facility data might be created by either the permitting authority or the permittee, depending on the type of permit that will be used. The EA uses a detailed understanding of responsibility for data creation to estimate and assign data entry costs and savings for permittees, states, tribes, and territories.

(d) Changes in the Need for State, Tribes, and Territories To Enter Permittee-Created Data

Under the current system of operations, states, tribes, and territories are responsible for collecting data from their permittees and providing the WENDB data to EPA. Paper submissions are the primary means by which permittees submit data to the states, tribes, and territories. This means the states, tribes, and territories are required to enter large amounts of data created by permittees into the permitting authority's information systems, or into ICIS-NPDES. Several types of reports are affected by this rule, but DMRs comprise a substantial majority of the permittee-created data that the states, tribes, and territories enter into data systems. As a result, a significant portion of the data collected is essentially being entered twice. The first is when permittees commit it to a paper form. The second is when the states enter the permittee-created data into an information system.

One of the chief benefits of this rule is that it virtually eliminates the need for such double entry of data in this sense: When DMRs and other reports are submitted electronically by permittees, these reports can be received electronically by the states, tribes, and territories, transmitted directly to the applicable information systems, and shared with EPA through the National Environmental Information Exchange Network.

There is generally no difference between the time required for a permittee to fill out a paper form and the time required for them to enter the same data on an electronic form. Therefore, permittee data creation costs and savings are not affected by the move to electronic reporting. The permittees are required to supply the same data, regardless of the media in which is it reported. However, during the transition period, some permittees might be required to submit data both electronically and on paper. The costs of such dual reporting are estimated to range from zero to $86 per entity.

The impact on the states, tribes, and territories is very different. Every data element a state, tribe, or territory does not have to enter into a data system is a savings compared to the current mode of operation. This does not mean, however, that every state, tribe, and territory will experience the same savings from the rule. Some permitting authorities have already begun shifting to electronic reporting. Forty-eight states have either implemented EPA's NetDMR or their own eDMR system or are in the process of doing so. Some permitting authorities have also begun moving to electronic reporting in other areas, such as NOI. However, participation in most of the state, tribe, or territory electronic reporting systems is voluntary, so participation rates are highly variable. Ohio is one of a few states that has a mandatory eDMR system and has achieved participation of over 99%. Other states have much lower participation rates, which mean they are bearing the costs of operating both paper-based and electronic reporting systems.

(e) Permittees Reporting Various Data Elements

As described in Section II, the current reporting guidelines require states, tribes, and territories to provide EPA with data for only a portion of the permittee universe. This rule expands the universe of permittees for which required reporting must be shared with EPA, primarily by requiring data on the so-called NPDES subprograms. Subprogram data elements are specific to the permittees in each of the subprogram universes. For example, the data elements applicable to CAFOs apply only to CAFO permittees, biosolids data elements apply only to biosolids permittees and so on.

(f) Frequency of Data Element Reporting

Another factor that affects the overall volume of data being submitted, and therefore the data entry costs and savings, is the variation in reporting frequencies. Reporting frequencies are dictated by the types of reports containing the data elements and the compliance monitoring strategy. DMR data elements are submitted on DMR forms, which are generally submitted monthly. Furthermore, many permittees submit multiple DMR forms per month, which explains (1) why DMR data elements comprise the largest portion of total data volume, and (2) why eliminating the need for the states, tribes, and territories to enter DMR data produces most of the savings from the rule.

Facility data are submitted on initial permit applications or on NOIs, and might be reviewed and updated every five years when the permit is reviewed for reissuance. A large part of the facility data is never changed. Portions that are subject to change are generally addressed during the permit's reviews.

Permit data, such as limits and limit sets, are established when the permit is issued, and reviewed and possibly revised on a five-year cycle. Permit conditions are seldom modified except during the regular five-year reviews, or as a result of enforcement actions.

Enforcement and compliance data are created on an as-needed basis. For example, inspection data are created at the time a facility is inspected. It is possible that some permittees will never have any violations or enforcement actions against them, and therefore very little enforcement data associated with them beyond routine compliance monitoring.

Subprogram data elements can be found on any of the major submissions, but are primarily contained in the applicable annual reports. Each of the data types and possible submissions and their frequencies has been evaluated for proper mapping into the EA.

(g) Time Required To Enter Data Elements

Understanding how long it takes to enter data elements is a critical component of the EA. Nine states were surveyed to develop this information. Each respondent was asked to estimate the time it took them to enter various types of data elements. Respondents were grouped according to whether they were in a direct entry, batch entry or hybrid state, and average data entry times were computed for each data element within each group of states. The EA uses the data entry times from the survey to estimate how much time states, tribes, and territories will spend entering different types of data elements.

(h) Labor Costs of Data Entry

Labor rates for the rulemaking are taken from the Bureau of Labor Statistics. Several hourly rates are used, depending on the type of work and whether the worker is a government or private sector worker.

(i) System Development Costs

As described in Section II, EPA intends to develop electronic reporting systems for each of the reports covered by this rule—DMRs, NOIs, and program reports. Those EPA-developed systems will be offered to all of the states, tribes, territories, and permittees for their use. The cost of developing those reporting systems by EPA and the infrastructure to accommodate them were calculated and documented in a series of technical reports, and comprise the majority of the EPA HQ implementation costs as reported by the EA. EPA intends to encourage third-party development of electronic reporting systems. Ultimately each authorized state, tribe, and territory will decide whether to use, and allow their permittees to use, the EPA-provided electronic reporting systems or other systems. Each state, tribe, and territory has the option of adopting one or more of the EPA systems and rejecting the others. Although EPA is building, and making available, a comprehensive set of systems, the EA includes certain state, tribe, and territory costs to modify and expand their electronic reporting systems.

The costs of modifying ICIS and the state, tribe, and territory NPDES data systems are somewhat different. Each of the authorized states, tribes, or territories either has its own data system, or uses ICIS–NPDES. All of these data systems are thought to need some degree of modification to accept the additional data elements, and in the case of state, tribe, and territory data systems, to share that data with EPA. EPA developed an estimate of its costs to modify ICIS. The EA includes those EPA costs, and uses those costs to estimate the cost of database changes in the states, tribes, and territories. The EA uses this approach because EPA does not have detailed information about the data structures in the states, tribes, and territories. The EA does take the available information about state, tribe, and territory data systems into consideration.

All of these system development expenditures are included in the implementation costs of the rule, most of which are expended by EPA prior to rule promulgation and by the states, tribes, and territories within the first year after the effective date of the rule under the implementation schedule described in Section VII.

The EA also estimates marginal operation and maintenance (O&M) costs, over and above current annual costs, for EPA to support the systems required by the rule. It assumes there are no incremental O&M costs for states, tribes, and territories specifically to maintain the upgraded electronic systems (although it does include other ongoing costs, such as data entry). EPA estimates that most of the state compliance costs will take place in the first few years after the final rule.

(j) Additional Implementation Activities

In addition to system development costs, the EA includes the costs to EPA and the states, tribes, and territories of the following activities associated with the implementation of the rule:

- Authorized NPDES programs making decisions regarding their initial recipient status;
- Authorized NPDES programs demonstrating their attorneys general accept electronic signatures in lieu of physical signature, thereby certifying compliance with CROMERR;
- Authorized NPDES programs preparing IPs and EPA review of those plans;
- Authorized NPDES programs updating their Memoranda of Agreement with their Regional Administrator;
- Authorized NPDES program and EPA developing criteria for temporary and permanent waivers from electronic reporting;
- Authorized NPDES program and EPA coordination via training webinars;
- EPA assessing participation rates and, where appropriate, conducting oversight using its CWA authority and ICR to compel NPDES-regulated entities to utilize their NPDES program's electronic reporting system; and,
- Authorized NPDES programs and EPA modifying permits to require electronic submissions.

The EA does not attempt to estimate the costs the states, tribes, and territories will incur to revise their statutes or regulations to implement the changes required by this rule.

(k) Consolidating Summary Reports

When the rule is fully implemented, EPA would essentially have complete data on almost the entire NPDES universe of permittees. As a result, EPA HQ will have all of the data necessary to prepare the Annual Notice of Non-Compliance, the Quarterly Non-Compliance Report, and the Semi-Annual Statistical Summary Report, all currently required from NPDES-authorized states, tribes, and territories by 40 CFR 123.45.

For that reason, the rule replaces all of those reports with a single report generated by EPA HQ using the data in the data systems after implementation of the rule. The EA estimates the reduced burden on the states, tribes, and territories as a result of this reporting change.

(l) Paper and Postage Savings

As described in Section II, the majority of permittee submittals are being sent to the states, tribes, and territories on paper. Each of those submittals therefore requires paper, an envelope, and postage.

Converting to electronic reporting under this rule will eliminate paper submittals of the covered reports for the vast majority of permittees. The EA estimates the percentage of permittees that will be required to use electronic reporting, the number and mix of reports they submit annually, as well as the number of pages in each report, and the required postage.

(m) Registration, Electronic Signatures Agreements and Training

Instituting electronic reporting will entail some effort from the permittees. The EA assumes that every permittee will have to take certain steps in order to begin reporting electronically, whether they report directly to EPA or to their respective state, tribe, or territory. The EA incorporates available data about the extent to which regulated entities are using electronic reporting systems to submit DMRs and assumes these entities will not bear additional registration and training costs.

There are some differences in the costs to different permittees, based on the activities they are engaged in, and these differences have been included in the EA. To use the electronic reporting system for NetDMR and NeT, individual regulated entities will need to register for accounts, either on EPA's Central Data Exchange (CDX) or a similar data portal provided by their authorized NPDES program. Most regulated entities (excluding construction operators in states that allow a Hybrid Approach, as discussed in Section V) will also need to mail their authorized NPDES program an electronic signature agreement (ESA) stating that their electronic personal identification number (PIN) is the legal equivalent of their written signature.

NetDMR or authorized NPDES program eDMR systems are sufficiently complex that many regulated entities will need training to effectively use them. The EA assumes this training will be conducted online. Experience with currently operating systems has shown that training is not necessary for submitting NOIs or program reports electronically, as these systems are less complicated. General permit facilities would also use these less complicated systems to submit DMRs and, therefore, not require training.

The EA also assumes that some permittees would bear additional minor implementation costs associated with electronic reporting registration to satisfy EPA's CROMERR requirements. Specifically, some entities would need to acquire a new business email address and entities that report less frequently than every 90 days would need to reset their password when they report. Including registration, ESA, training, and these minor costs, the EA estimates total initial implementation costs for individual permittees of $314 or less, with an additional recurring cost for some permittees of approximately $6 when the permittee must reset their password. The EA also assumes that EPA would take over initial recipient status under 40 CFR 127.27(d) in two states during the ten year period covered by the analysis. Permittees in these states would need to re-register at an additional cost of $277 or less as most electronic signing credentials are not transferrable from one electronic reporting system to another.

(n) Reporting During the Transition Period

As discussed in Section V, during the initial implementation period, certain regulated entities might be required to submit data to their authorized state program both electronically and on paper. This dual reporting during the transition would involve copying information from paper forms into the appropriate state electronic reporting system and would occur only under certain conditions (*e.g.,* the regulated entity's permit conditions explicitly require paper reporting, the authorized state does not use its enforcement discretion, and the permittee does not consent to a minor modification of its permit). The EA incorporates the cost of such dual reporting for a portion of the affected universe. It assumes the actual number of regulated entities affected and the resulting cost will decrease over the course of the transition period, as permits are modified to require electronic, instead of paper reporting, either on the normal permit cycle or as a result of state implementation activities. Therefore, the EA assumes dual reporting will cease once the rule is fully implemented, five years after the effective date of the rule. The EA estimates the additional cost to permittees of such dual reporting at $86 or less per affected entity per year.

*D. Summary of Costs and Savings*

The EA for this final rule estimates savings and costs over a ten-year period, beginning on the date that the rule would become final. Applying a 3% discount rate, and using 2014 dollars, the largest annual savings are $44.0 million during the first year of electronic reporting (Year 1 in Table 6 and Table 7). During the ten-year period, the highest annual costs are $74.4 million during the first year after the effective date of the rule (Year 0 in Table 6 and Table 7). Annual costs are significantly less in all other years. Cumulative savings for the ten-year period are $406.4 million while cumulative costs are $250.4 million. As a result the overall economic effect of this rule is a net cumulative savings of $156.0 million over the ten years of the projection.

The following tables summarize the EA cost and savings using the 3% (Table 6) and 7% (Table 7) discount rates as required by EPA's EA guidance in 2014 dollars. Each table shows the annual costs and savings. The ''breakeven point'' is the date after the final rule when the cumulative savings exceed cumulative costs.

There are both qualitative and quantitative benefits associated with this final rule. EPA has estimated some of the benefits of this rule by performing calculations based on: the reporting universe; reporting frequencies and required data; changes in who reports the data; systems and infrastructure changes to make the reporting possible; and the schedule for implementation. Using a 3% discount rate, and 2014 dollars, the annual total net benefits at full implementation (five years after the effective date of the rule) associated with reduced paperwork and management of information are approximately $26 million, with 93% of those savings going to the states, tribes, and territories.

Additional benefits associated with the rule include the potential for improved compliance and allow for better government and public decision making; however, EPA was unable to monetize these benefits. EPA was able to develop a rough monetary estimate of the benefits associated with reductions in errors in the reported data resulting from the rule that benefit both regulated entities and permitting authorities. Using information on the number of errors typically associated with DMR submissions, EPA developed a rough estimate of the potential time and cost savings that permitted authorities might experience annually from no longer having to correct errors in DMR data. Specifically, EPA estimates total time and cost saving of 130 full-time equivalents (FTEs) and $9.3 million in wages.

The cost of implementing the final rule during the first year after the effective date is approximately $74.4 million. The cost is estimated to drop to a $20.1 million or less per year in subsequent years, once electronic reporting begins (assuming a 3% discount rate). During the first year of electronic reporting (Year 1 in Table 6 and Table 7), annual savings greatly outweigh annual costs, resulting in net savings of approximately $23.9 million per year, with similar net savings in subsequent years.

TABLE 6—TEN-YEAR PROJECTED COSTS AND SAVINGS—3% DISCOUNT RATE

| Year | EPA headquarters | EPA regions | States | Regulated entities |
|---|---|---|---|---|
| **Costs** | | | | |
| 0 | $9,720,000 | $400,000 | $43,100,000 | $21,160,000 |
| 1 | 1,040,000 | 30,000 | 18,060,000 | 1,010,000 |
| 2 | 1,230,000 | 30,000 | 17,530,000 | 930,000 |
| 3 | 940,000 | 30,000 | 17,020,000 | 1,240,000 |
| 4 | 850,000 | 30,000 | 16,520,000 | 800,000 |
| 5 | 830,000 | 30,000 | 16,000,000 | 740,000 |
| 6 | 1,330,000 | 30,000 | 15,440,000 | 710,000 |
| 7 | 880,000 | 30,000 | 14,990,000 | 690,000 |
| 8 | 760,000 | 30,000 | 14,550,000 | 1,000,000 |
| 9 | 730,000 | 30,000 | 14,130,000 | 650,000 |
| 10 | 710,000 | 30,000 | 13,800,000 | 630,000 |

TABLE 6—TEN-YEAR PROJECTED COSTS AND SAVINGS—3% DISCOUNT RATE—Continued

| Year | EPA headquarters | EPA regions | States | Regulated entities |
|---|---|---|---|---|
| **Cost Savings** | | | | |
| 0 | | $— | $— | $— |
| 1 | | (2,280,000) | (40,530,000) | (1,210,000) |
| 2 | | (2,210,000) | (39,350,000) | (1,210,000) |
| 3 | | (2,150,000) | (38,200,000) | (1,210,000) |
| 4 | | (2,090,000) | (37,090,000) | (1,210,000) |
| 5 | | (2,040,000) | (38,610,000) | (1,250,000) |
| 6 | | (2,060,000) | (38,210,000) | (1,220,000) |
| 7 | | (2,000,000) | (37,100,000) | (1,180,000) |
| 8 | | (1,940,000) | (36,020,000) | (1,150,000) |
| 9 | | (1,890,000) | (34,970,000) | (1,110,000) |
| 10 | | (1,830,000) | (33,950,000) | (1,080,000) |

TABLE 7—TEN-YEAR PROJECTED COSTS AND SAVINGS—7% DISCOUNT RATE

| Year | EPA headquarters | EPA regions | States | Regulated entities |
|---|---|---|---|---|
| **Costs** | | | | |
| 0 | $9,720,000 | $400,000 | $43,100,000 | $21,160,000 |
| 1 | 1,000,000 | 30,000 | 17,380,000 | 970,000 |
| 2 | 1,140,000 | 30,000 | 16,240,000 | 870,000 |
| 3 | 840,000 | 20,000 | 15,180,000 | 1,100,000 |
| 4 | 730,000 | 20,000 | 14,190,000 | 690,000 |
| 5 | 680,000 | 20,000 | 13,220,000 | 610,000 |
| 6 | 1,050,000 | 20,000 | 12,280,000 | 570,000 |
| 7 | 680,000 | 20,000 | 11,480,000 | 530,000 |
| 8 | 560,000 | 20,000 | 10,730,000 | 730,000 |
| 9 | 520,000 | 20,000 | 10,030,000 | 460,000 |
| 10 | 490,000 | 20,000 | 9,430,000 | 430,000 |
| **Cost Savings** | | | | |
| 0 | $— | $— | $— | $— |
| 1 | $— | (2,200,000) | (39,010,000) | (1,170,000) |
| 2 | $— | (2,050,000) | (36,460,000) | (1,120,000) |
| 3 | $— | (1,920,000) | (34,070,000) | (1,080,000) |
| 4 | $— | (1,790,000) | (31,850,000) | (1,040,000) |
| 5 | $— | (1,690,000) | (31,910,000) | (1,040,000) |
| 6 | $— | (1,640,000) | (30,410,000) | (970,000) |
| 7 | $— | (1,530,000) | (28,420,000) | (910,000) |
| 8 | $— | (1,430,000) | (26,560,000) | (850,000) |
| 9 | $— | (1,340,000) | (24,820,000) | (790,000) |
| 10 | $— | (1,250,000) | (23,200,000) | (740,000) |

## VII. Regulatory Implementation

### *A. Overview of Regulatory Implementation Schedule*

EPA developed the implementation schedule for this final rule after careful analysis and extensive consultation with authorized NPDES programs and many other stakeholders. This implementation schedule balances the goals and benefits of electronic reporting with the practical challenges facing authorized NPDES programs and regulated entities. For example, some authorized NPDES programs noted that they compete against other agencies for the time and resources of a central shared information technology staff. For these authorized NPDES programs the IP may need to be tailored to account for their unique circumstances. The transition from paper to electronic reporting will require close coordination and cooperation between EPA and authorized NPDES programs. These IPs will provide an effective means for documenting all necessary tasks for a timely and orderly transition to electronic reporting.

As previously noted, the benefits of this final rule include accelerated resource savings that states, tribes, and territories will realize through reduced data entry burden and reduced effort in responding to public requests for data, consistent requirements for electronic reporting across all states, tribes, and territories, increased data quality, and more timely access to NPDES program data in an electronic format for EPA, states, tribes, and territories, regulated entities, and the public. These benefits and savings will be realized sooner the more quickly a state can implement the final rule. Under the final rule, a complete set of information for the regulated universe will be required no later than five years after the effective date of the final rule. In this final rule, EPA is adopting the timeline recommended by authorized NPDES programs and if participation goals are not met, EPA will issue individual notices to require NPDES-regulated entities to use the authorized NPDES program's electronic reporting system. The combination of the deadlines in this

final rule, current technology, and EPA's plan to issue individual notices will help maintain a steady and measurable pace towards electronic reporting in a reasonable time period.

Given the different types of NPDES program data, EPA is phasing in the electronic collection, management, and transfer of NPDES program data (appendix A to 40 CFR part 127) on the following schedule. A chronological listing of implementation activities are provided in Table 8.

• *Phase 1 Data:* Authorized NPDES programs are required to transmit to EPA basic facility and permit information (see list of data elements in DCN 0007) for all permits as well as other data necessary for implementation of Phase 1 data collection within nine months after the effective date of the final rule. One year after the effective date of the final rule authorized NPDES programs will also start electronically transmitting to EPA their state performance data, which includes information generated from compliance monitoring (*e.g.,* inspections), violation determinations, and enforcement actions. Additionally, one year after the effective date of the final rule, NPDES regulated entities that are required to submit DMRs (majors and nonmajors, individually permitted facilities and facilities covered by general permits) must do so electronically. EPA and authorized NPDES programs will begin electronically receiving these DMRs from all DMR filers and start sharing these data with each other. One year after the effective date of the final rule, all NPDES regulated entities in states where EPA is the authorized NPDES biosolids program (currently 42 of 50 states and all other tribal lands and territories) must electronically submit their Sewage Sludge/Biosolids Annual Program Report to EPA.

• *Phase 2 Data:* Authorized NPDES programs have five years to begin electronically collecting, managing, and sharing the remaining set of information in appendix A in 40 CFR part 127. This information includes: (1) General permit reports [Notice of Intent to be covered (NOI); Notice of Termination (NOT); No Exposure Certification (NOE); Low Erosivity Waiver and Other Waivers from Stormwater Controls (LEW)]; Sewage Sludge/Biosolids Annual Program Report (where the state is the authorized NPDES biosolids program); and all other remaining NPDES program reports (*e.g.,* CAFO Annual Report, Pretreatment Program Annual Report). Authorized NPDES programs will also share with EPA all data necessary for implementation of Phase 2 data collection three months before the Phase 2 deadline (*e.g.,* general permit parameters). Additionally, one year after the effective date of the final rule, authorized NPDES programs are required to submit an IP for meeting the Phase 2 data requirements to EPA for EPA to review.

• *NNCR and Other State Reporting:* EPA will replace a number of currently required state reports (*e.g.,* QNCR and ANCR) with the new NNCR when EPA has more a timely, complete, more accurate, and nationally-consistent set of data about the NPDES program. Full implementation of the NNCR and phase out of certain state reports will only be possible one full year after full implementation of Phase 2 data collection. A complete set of Phase 1 and 2 data are necessary to develop and produce the NNCR.

TABLE 8—CHRONOLOGICAL LISTING OF IMPLEMENTATION ACTIVITIES

| Key milestones | Date |
|---|---|
| Final NPDES Electronic Reporting Rule—Effective Date | Sixty days after publication in the **Federal Register**. |
| Authorized NPDES programs will start incorporating the new electronic reporting requirements into new or re-issued NPDES permits upon the effective date of this final rule. Authorized NPDES programs can incorporate electronic reporting requirements into NPDES permits through use of a minor modification process [see 40 CFR 122.63(f)]. | Effective Date of Final Rule. |
| A state, tribe, or territory that seeks authorization to implement an NPDES program must describe if it is requesting to be the initial recipient of electronic NPDES information from NPDES-regulated facilities for specific NPDES data groups. See 40 CFR 123.22(g) and appendix A to 40 CFR part 127. | 90 days after the Effective Date of Final Rule. |
| Authorized NPDES programs will decide the NPDES data groups for which they wish to be the initial recipient of electronic NPDES information from NPDES-regulated entities. The final rule uses an 'opt-out' approach so these authorized programs will need to provide notice to EPA if they wish for EPA to be the initial recipient for one or more of their NPDES data groups. These notices should be sent to EPA within 120 days of the effective date of the final rule. | 120 days after the Effective Date of Final Rule. |
| EPA will publish on its Website and in the **Federal Register** a listing of the initial recipients for electronic NPDES information from NPDES-regulated entities by state, tribe, or territory and by NPDES data group. This listing will provide NPDES-regulated entities the initial recipient of their NPDES electronic data submissions and the due date for these NPDES electronic data submissions. | 210 days after the promulgation date for the Final Rule. |
| Authorized NPDES programs will electronically transmit to EPA basic facility and permit information (see list of data elements in DCN 0007) for all permits as well as other data necessary for implementation of Phase 1 data collection within nine months after the effective date of the final rule. Authorized NPDES programs often collect these data from paper individual NPDES permit applications and forms submitted by NPDES regulated entities; however, some states collect these data from NPDES regulated entities through electronic reporting systems. | Within nine months of the Effective Date of Final Rule. |
| One year after the effective date of the final rule, authorized NPDES programs will start sharing with EPA their state performance data, which includes information generated from compliance monitoring (e.g., inspections), violation determinations, and enforcement actions. | Starting one year after the Effective Date of Final Rule. |
| EPA and authorized NPDES programs will begin electronically receiving DMRs from all DMR filers [40 CFR 122.41(l)(4)] and start sharing these data with the designated EPA and state NPDES data systems. | Starting one year after the Effective Date of Final Rule. |
| All NPDES regulated entities in states where EPA is the authorized NPDES biosolids program (currently 42 of 50 states and all other tribal lands and territories) must electronically submit their Sewage Sludge/Biosolids Annual Program Reports [40 CFR part 503] to EPA. | Starting one year after the Effective Date of Final Rule. |

TABLE 8—CHRONOLOGICAL LISTING OF IMPLEMENTATION ACTIVITIES—Continued

| Key milestones | Date |
|---|---|
| Authorized NPDES programs will submit an IP to EPA for EPA's review to ensure that authorized NPDES programs will meet the Phase 2 electronic reporting deadline. The content of these plans must provide enough detail (e.g., tasks, milestones, roles and responsibilities, necessary resources) to ensure that EPA and authorized NPDES programs can work together to successfully implement electronic reporting. The IP will also document the process for evaluating and approving temporary and permanent electronic reporting waivers from NPDES regulated entities. | One year after the Effective Date of Final Rule. |
| EPA will separately calculate the electronic reporting participation rate for each authorized NPDES program and for DMRs and the Sewage Sludge/Biosolids Annual Program Reports. EPA will assess the electronic reporting participation rate for individually permitted facilities separate from the electronic reporting participation rate for general permit covered facilities for DMRs. | Eighteen months after the Effective Date of Final Rule and annually thereafter. |
| Per existing NPDES regulations [see 40 CFR 123.62(e)], authorized states, tribes, and territories will finish any necessary regulatory or statutory changes to their NPDES programs. | Two years after the Effective Date of Final Rule. |
| Authorized NPDES programs will electronically transmit to EPA the data necessary for implementation of Phase 2 data collection (three months prior to Phase 2 deadline). | Within four years and nine months of the Effective Date of Final Rule. |
| NPDES regulated entities will start electronically submitting their Phase 2 data. This information includes:<br>• General Permit Reports [Notices of Intent to discharge (NOIs); Notices of Termination (NOTs); No Exposure Certifications (NOEs); Low Erosivity Waivers or Other Waivers from Stormwater Controls (LEWs)] [40 CFR 122.26(b)(15), 122.28 and 124.5];<br>• Sewage Sludge/Biosolids Annual Program Reports [40 CFR part 503]—where the state is the authorized NPDES program;<br>• Concentrated Animal Feeding Operation (CAFO) Annual Program Reports [40 CFR 122.42(e)(4)];<br>• Municipal Separate Storm Sewer System (MS4) Program Reports [40 CFR 122.34(g)(3) and 122.42(c)];<br>• Pretreatment Program Reports [40 CFR 403.12(i)];<br>• Significant Industrial User Compliance Reports in Municipalities Without Approved Pretreatment Programs [40 CFR 403.12(e) and (h)];<br>• Sewer Overflow/Bypass Event Reports [40 CFR 122.41(l)(4), (l)(6) and (7), (m)(3)]; and<br>• CWA section 316(b) Annual Reports [40 CFR part 125, subpart J] | Starting five years after the Effective Date of Final Rule. |
| Authorized NPDES programs will also need to re-submit their waiver process descriptions to EPA for review on a five year cycle. EPA will inform the state if its waiver process description is inadequate. This will allow EPA and authorized NPDES programs to assess the effectiveness of the waiver process against advances in information technology. | Starting five years after the Effective Date of Final Rule. |
| EPA will separately calculate the electronic reporting participation rate for each authorized NPDES program and for each NPDES data group. | Five years and six months after the Effective Date of Final Rule and annually thereafter. |
| Upon successful implementation of Phase 1 and 2, authorized NPDES programs will stop generating the Quarterly Non-Compliance Report (QNCR), the Annual Non-Compliance Report (ANCR), the Semi-Annual Statistical Summary Report, and the part 501 annual biosolids report. | Starting six years after the Effective Date of Final Rule. |
| EPA will starting publishing the NPDES Noncompliance Report (NNCR) ..... | Starting six years after the Effective Date of Final Rule with annual and quarterly updates thereafter. |

*B. Roles and Responsibilities*

1. Authorized NPDES Programs

This rule does not change the governing responsibilities of authorized NPDES programs or EPA. Authorized NPDES programs will start incorporating the new electronic reporting requirements into new or reissued NPDES permits upon the effective date of this final rule. For example, changes to 40 CFR 122.41 must be incorporated into any NPDES permit that is issued on or after the effective date of this final rule.

Authorized NPDES programs will decide the NPDES data groups for which they wish to be the initial recipient of electronic NPDES information from NPDES-regulated entities. The final rule uses an 'opt-out' approach so these authorized programs will need to provide notice to EPA if they wish for EPA to be the initial recipient for one or more of their NPDES data groups. These notices should be sent to EPA within 120 days of the effective date of the final rule.

Authorized NPDES programs will electronically transmit to EPA basic facility and permit information (see list of data elements in DCN 0007) for all permits as well as other data necessary for implementation of Phase 1 data collection within nine months after the effective date of the final rule. Authorized NPDES programs often collect these data from paper individual NPDES permit applications and forms submitted by NPDES regulated entities; however, some states collect these data from NPDES regulated entities through electronic reporting systems.

One year after the effective date of the final rule, authorized NPDES programs will start sharing with EPA their state performance data, which includes information generated from compliance monitoring (*e.g.,* inspections), violation determinations, and enforcement actions. Additionally, no later than one year after the effective date of the final rule, EPA and authorized NPDES programs will begin electronically receiving DMRs from all DMR filers and start sharing these data with the designated EPA and state NPDES data systems. To support the electronic collection, management, and sharing of DMR data, authorized NPDES programs will need to update their technology and infrastructure. For example, authorized NPDES programs may elect to use EPA's NPDES data system (ICIS–NPDES) and electronic reporting system (NetDMR) to collect, manage, and share DMR data or authorized NPDES programs may choose devote their resources to develop their own such

data systems while meeting the regulatory requirements of 40 CFR part 3 (including, in all cases, subpart D), 40 CFR 122.22, and 40 CFR part 127. EPA will continue to closely work with authorized NPDES programs to help them develop their NPDES data systems in a cost-effective manner.

Authorized NPDES programs will also likely need to provide training materials and resources to NPDES regulated entities (*e.g.,* staff time to answer questions from NPDES regulated entities). These training materials and resources will help provide NPDES regulated entities with the necessary guidance and knowledge to utilize the appropriate electronic reporting system. In particular, NPDES regulated entities will need to learn how to obtain an electronic signature as well as how to register and maintain their login information for the appropriate electronic reporting system.

Similarly, no later than five years after the effective date of the final rule EPA and authorized NPDES programs will start electronically receiving Phase 2 data from all NPDES regulated entities and start sharing these data with the designated EPA and state NPDES data systems. Authorized NPDES programs will submit an IP to EPA for EPA's review to ensure that authorized NPDES programs will meet this Phase 2 deadline. The content of these plans must provide enough detail (*e.g.,* tasks, milestones, roles and responsibilities, necessary resources) to ensure that EPA and authorized NPDES programs can work together to successfully implement electronic reporting. See Section V.B.2. These IPs need to be submitted to EPA for review within one year of the effective date of the final rule. EPA will inform the state if its implementation plan is inadequate. EPA will post the IPs on its Web site to provide the public with greater transparency on the milestones and tasks each state will be taking to move towards electronic reporting. Authorized NPDES program will also share with EPA all data necessary for implementation of Phase 2 data collection three months before the applicable Phase 2 deadline. EPA will work with each authorized NPDES program to identify the appropriate deadline for the Phase 2 implementation data. Authorized NPDES programs will also need to update their state NPDES data system to support electronic reporting as well as develop training materials and resources for NPDES regulated entities.[12]

Finally, authorized NPDES programs will also need to document and submit to EPA for approval their process for evaluating and approving temporary and permanent electronic reporting waivers from NPDES regulated entities. This discussion will be contained in the IP. Authorized NPDES programs will also need to re-submit their waiver process descriptions to EPA for review on a five year cycle. EPA will inform the state if its waiver process description is inadequate. This will allow EPA and authorized NPDES programs to assess the effectiveness of the waiver process against advances in information technology. To facilitate an orderly transition to electronic reporting, authorized NPDES programs may issue temporary waivers to DMR filers prior to EPA's review of the program's IP or waiver process description submission to EPA. These waivers may not have a duration longer than five years.

EPA estimates that some authorized NPDES programs may need to update their regulations or statutes to make clear that electronic reporting is required for the reports listed in Table 1 of appendix A and that these electronic submissions must be compliant with 40 CFR part 127 (including appendix A) and 40 CFR part 3 (including, in all cases, subpart D) (CROMERR—authentication and encryption standards). Existing EPA regulations at 40 CFR 123.62(e) require that any updates to the authorized NPDES program take place within one-year of the effective date of the final rule (if only a regulatory change is required) and within two years of the effective date of the final rule (if a state statute change is required). Accordingly, all authorized NPDES programs should complete any necessary updates to their state regulations and statutes within two years of the effective date of the final rule.

Finally, the final rule will also lighten the reporting burden currently placed on the authorized NPDES programs. Upon successful implementation of Phase 1 and 2, the final rule will provide authorized NPDES programs with regulatory relief from reporting associated with the Quarterly Non-Compliance Report (QNCR), the Annual Non-Compliance Report (ANCR), the Semi-Annual Statistical Summary Report, and the biosolids information required to be submitted to EPA annually by authorized NPDES programs. EPA will coordinate the switch over from the existing set of state reporting requirements to the new EPA generated NNCR.

2. NPDES Regulated Entities

NPDES permitted entities should expect to see new electronic reporting requirements in NPDES permits that are issued on or after the effective date of this final rule. In particular, NPDES permitted entities will be required to identify the initial recipient for their NPDES data submissions (in compliance with 40 CFR 122.41). In particular, NPDES permittees will consult EPA's Web site to identify the initial recipient for their NPDES data submissions. EPA will update and maintain the listing of initial recipients.

NPDES permitted entities should expect to electronically submit their DMRs no later than one year after the effective date of the final rule. NPDES permittees will need to be familiar on how to electronically report their DMRs using the approved electronic reporting system. Their permitting authority will provide training materials and resources to help NPDES regulated entities with the necessary guidance and knowledge to utilize the appropriate electronic reporting system. In particular, NPDES regulated entities will need to learn how to register and maintain an electronic signature as well as how to register and maintain their login information for the appropriate electronic reporting system.

Similarly, five years after the effective date of the final rule, NPDES regulated entities will start electronically submitting their Phase 2 data. NPDES permitted entities will identify the initial recipient for their Phase 2 data submissions (in compliance with 40 CFR 122.41) by consulting with EPA's Web site. EPA's Web site will also provide notice of the deadline for these Phase 2 electronic data submissions and information on the approved electronic reporting systems. NPDES regulated entities should also note that they may be required to use more than one electronic reporting system for their Phase 1 and 2 data submissions. For example, a POTW may be required to use a state e-DMR system to electronically report its DMRs (as the state is the authorized NPDES program for NPDES permits) and EPA's NeT to report their Sewage Sludge/Biosolids Annual Program Report (as EPA is the NPDES program for the Federal biosolids program). For NPDES-regulated entities that will use EPA's electronic reporting systems, EPA will work closely with states, tribes, territories, and NPDES-regulated entities to provide sufficient training and registration support prior to the start of each implementation phase.

Finally, as previously noted, the purpose of appendix A is to ensure that

[12] EPA notes that some authorized NPDES programs have adopted EPA's national NPDES data system (ICIS–NPDES).

there is consistent and complete reporting nationwide, and to expedite the collection and processing of the data, thereby reducing burden and making the data more timely, accurate, complete, useful, and transparent for everyone. This final rule changes the mode of transmission of NPDES data but does not increase the amount of NPDES information required to be reported under existing regulations. The evolution of appendix A reflects over ten years of EPA working closely with the states to identify the critical data elements that permitting authorities need to implement the NPDES program.

3. EPA

EPA Regions that issue NPDES permits will continue to incorporate electronic reporting requirements into new or re-issued NPDES permits and will be required to do so upon the effective date of this final rule. EPA will also incorporate the final rule requirements into the few nationwide permits that it issues in accordance with the rule's implementation schedule. This will help communicate and confirm the electronic reporting responsibilities of NPDES regulated entities.

EPA Headquarters will hold regular teleconferences and webinars with authorized NPDES programs during the transition period from paper reporting to electronic reporting to assist with data collection, management, and sharing activities. EPA will use these teleconferences and webinars to address general issues associated with electronic reporting as well as specific state needs and questions.

EPA will also coordinate with authorized NPDES programs and update the data sharing process to include all the required set of NPDES program data (appendix A to 40 CFR part 127) between EPA and the authorized NPDES programs (see DCN 0191 for an overview of the current data sharing process). EPA will also update its data systems (*e.g.,* ICIS–NPDES, NetDMR, NeT) to incorporate all the required set of NPDES program data. EPA will prioritize its actions to first support the collection, management, and sharing of Phase 1 data. EPA will continue to closely work with authorized NPDES programs to help them develop their NPDES data systems in a cost-effective manner. This includes providing training materials and resources to states that adopt EPA's data systems [*e.g.,* Central Data Exchange (CDX), CROMERR shared services, ICIS–NPDES, NetDMR, NeT].

EPA will maintain the initial recipient list for each state and by each NPDES data group and will publish this list on its Web site and in the **Federal Register** as changes occur. EPA will first publish this listing within 180 days of the effective date of the final rule. This listing will provide NPDES-regulated entities the initial recipient of their NPDES electronic data submissions and the due date for these NPDES electronic data submissions.

One year after the effective date of the final rule, EPA will receive state performance data, which includes information generated from compliance monitoring (*e.g.,* inspections), violation determinations, and enforcement actions, in its national NPDES data system (*i.e.,* ICIS–NPDES). EPA will do the same for the data that it generates from its own inspections, violation determinations, and enforcement actions. Additionally, one year after the effective date of the final rule, EPA and authorized NPDES programs will begin electronically receiving DMRs from all DMR filers and start sharing these data with each other. Additionally, one year after the effective date of the final rule EPA will electronically collect and manage data from Sewage Sludge/Biosolids Annual Program Reports that are submitted by NPDES regulated entities in states where EPA is the authorized NPDES biosolids program (currently 42 of 50 states and all other tribal lands and territories).

Under the implementation schedule for this final rule, the Agency will assess the electronic reporting participation rate of NPDES regulated entities in each state and by each data group to determine when it would be appropriate to use its individual notices to compel electronic reporting. For example, EPA would likely use individual notices when the authorized state, tribe, or territory has less than 90-percent participation rate for one or more data groups (*e.g.,* MS4 program reports). EPA will separately calculate the participation rate for each state and for each data group no later than six months after the deadline for conversion from paper to electronic submissions (*e.g.,* 18 months after the effective date of the final rule for DMRs). As appropriate, EPA will then send notice to the NPDES regulated entities that are not utilizing electronic reporting (*e.g.,* 21 months after the effective date of the final rule for DMRs). This notice will direct NPDES regulated entities to use their authorized NPDES program's electronic reporting system. Failure to comply with this notice will result in noncompliance with the CWA and may result in penalties. EPA will repeat its review of the participation rate for each state and for each data group on an annual basis, as needed, and send out notices as appropriate.

Similar to Phase 1 implementation, no later than five years after the effective date of the final rule EPA and authorized NPDES programs will begin electronically receiving Phase 2 data from all NPDES regulated entities and start sharing these data with each other. EPA will review the Phase 2 data IPs from authorized NPDES programs. This IP will also include a description of the program's waiver approval processes. EPA will finish its review of these IPs and waiver process descriptions no later than six months after receipt. EPA will inform the state if its implementation plan or waiver process description is inadequate. EPA will post these IPs and waiver process description notices on its Web site to provide the public with greater transparency on the milestones and tasks each state will be taking to move towards electronic reporting.

Finally, EPA will work with authorized NPDES programs to develop the NNCR. Upon successful implementation of Phase 1 and 2, EPA will work with authorized NPDES programs to coordinate the switch over from the existing set of state reporting requirements (*i.e.,* QNCR, ANCR, the Semi-Annual Statistical Summary Report, and the biosolids information required to be submitted to EPA annually by states) to the new EPA generated NNCR. EPA will publish the NNCR on its Web site on a quarterly basis.

*C. Other Aspects of Regulatory Implementation*

1. Copy of Record

EPA is clarifying that the final rule does not change EPA's authentication and encryption standards for electronic reporting. Below is a discussion of the copy of record as it pertains to the implementation of electronic reporting.

An important element of EPA's authentication and encryption standards for electronic reporting is the ''copy of record.'' See 40 CFR 3.3. A copy of record must:

- Be a true and correct copy of the electronic document that was received, and it must be legally demonstrable that it is in fact a true and correct copy;
- include all the electronic signatures that have been executed to sign the document or components of the document;
- include the date and time of receipt to help establish its relation to submission deadlines; and,
- be viewable in a human-readable format that clearly indicates what the submitter and, where applicable, the

signatory intended that each of the data elements or other information items in the document means.

For such CROMERR-compliant submissions, the copy of record is intended to serve as the electronic surrogate for what is commonly referred to as the paper submission with a ''wet-ink'' signature. The copy of record is meant to provide an authoritative answer to the question of what was actually submitted and, as applicable, what was signed and certified in the particular case.

It is important to note that the use of an electronic reporting system may dictate where the electronic copy of record is retained. EPA retains the copy of record for electronic submission made through its electronic reporting tools (*e.g.,* NetDMR and NeT). Likewise, state electronic reporting systems will contain the electronic copy of record for submissions made with these state systems.

Under the ''Dual Reporting'' scenario, as described in Table 3, the authorized NPDES program may elect to designate EPA as the initial recipient and EPA would electronically collect NPDES program data directly from NPDES-regulated entities. Under this scenario these entities would also make a paper submission of the same report with a ''wet-ink'' signature to the state (as required by their NPDES permit). In these cases, the paper submission to the state with a ''wet-ink'' signature is the copy of record.

2. Cross-Media Electronic Reporting Regulation (CROMERR)

EPA's final rule requires that all electronic reporting systems that are used for implementing NPDES electronic reporting, whether already existing or to be developed by EPA and authorized NPDES programs, be compliant with subpart D of EPA's CROMERR (see 40 CFR part 3). CROMERR sets performance-based, technology-neutral standards for systems that states, tribes, and local governments use to receive electronic reports from facilities they regulate under EPA-authorized programs. CROMERR also addresses electronic reporting directly to EPA.

EPA notes that state or EPA systems that use the Hybrid Approach, which is discussed in Section V, uses the paper document with a ''wet-ink'' signature as the copy of record. The related electronic data transfer from the Hybrid Approach is not a submission within the meaning of CROMERR. Additionally, the Hybrid Approach option still requires compliance with the regulatory requirements of 40 CFR 122.22 and 40 CFR part 127 and any additional permit requirements.

Under this rule, NPDES-regulated entities (*e.g.,* POTWs) are not required to submit a CROMERR application to electronically report NPDES program data. However, it is the responsibility of the authorized NPDES programs receiving these electronically reported NPDES program data to obtain approval from EPA for their electronic reporting systems and processes in accordance with EPA's CROMERR requirements. Under the final rule, NPDES-regulated entities that electronically report their NPDES program data will use CROMERR-approved electronic reporting systems and processes. Authorized NPDES programs are responsible for submitting CROMERR applications for their electronic reporting system and NPDES-regulated entities are only required to complete the necessary signature requirements for that system.

EPA also notes that CROMERR requires state, tribal or local government agencies that receive, or wish to begin receiving electronic reports under their EPA-authorized programs (*e.g.,* CWA pretreatment program) to apply to EPA for a revision or modification of those programs and obtain EPA approval. However, an important consideration is that the final rule does not require approved pretreatment programs to electronically collect NPDES program data from significant and categorical industrial users. Approved pretreatment programs may continue to collect NPDES program data from significant and categorical industrial users on paper.

3. Electronic Reporting for the Pesticides General Permit and Vessels General Permit

Several commenters had questions regarding the application of the proposed rule to regulated entities subject to EPA's Pesticides General Permit and Vessels General Permit. EPA provides NPDES permit coverage for pesticide applicators in states where EPA is the permitting authority and vessel operators nationwide. EPA is not exempting these two permits from the NPDES Electronic Reporting Rule. Specifically, EPA's General Permit regulations (40 CFR 122.28) apply to all general permits and EPA's proposed revisions to this regulatory language that implement electronic reporting do not exclude pesticide applicators or vessel operators (or any other sector or general permit). However, vessel incidental discharges and discharges from the application of pesticides are atypical from more traditional permitted discharges and as such, some of the data elements in Appendix A may not be appropriate as written. For example, there may not be a fixed address of where pesticide applications occur (*i.e.,* the activity permitted) and the actual location of such pesticide application activities may not be known until the time when those pesticides are actually applied (*i.e.,* at some point in time after that operator obtains NPDES permit coverage). Similarly, vessel operators often do not know into which waters they will discharge at the time of obtaining permit coverage and many of these vessels are operated by foreign companies based out of foreign ports (with non-US mailing addresses and phone numbers). In these instances, EPA will gather electronic information consistent with the nature of these discharges.

4. Due Dates for State Data Entry

To include all NPDES subprograms (*e.g.,* pretreatment, biosolids, sewer overflows, MS4 program reports, construction stormwater, industrial stormwater, cooling water intake structures), the required data set as defined by this final rule is more comprehensive than what authorized NPDES programs were previously reporting under previously existing EPA policy (see list of data elements in DCN 0007 as compared to appendix A to 40 CFR part 127). EPA will work closely with states, tribes, and territories to ensure that all authorized NPDES programs electronically transmit to EPA basic facility and permit information (see list of data elements in DCN 0007) for all permits as well as other data necessary for implementation of Phase 1 data collection within nine months after the effective date of the final rule. Collection of these data will enable NPDES regulated entities to begin electronic reporting as facility and permit data must first be entered into ICIS–NPDES for the system to accept compliance monitoring data (*e.g.,* DMRs, Sewage Sludge/Biosolids Annual Program Reports). Additionally, collection of these data will allow authorized NPDES programs to provide their compliance inspection and enforcement data to ICIS–NPDES. EPA will also work closely with authorized NPDES programs to ensure that all of the remaining facility and permit data required by the final rule for Phase 2 (see NPDES Data Group 1 in Tables 1 and 2 of appendix A to 40 CFR part 127) are entered into ICIS–NPDES within five years after the effective date of the final rule.

Additionally, under the final rule, authorized NPDES programs must start

submitting any new compliance monitoring and enforcement action data (see Appendix A to 40 CFR part 127) one year after the effective date of the final rule. These new data elements add to the existing data that states report (see DCN 0007) from their compliance monitoring activities and reflect the increased focus on the NPDES subprograms. The final rule only requires authorized NPDES programs to start entering these new compliance monitoring and enforcement action data elements into ICIS–NPDES one year after the effective date of the final rule.

5. Concentrated Animal Feeding Operations (CAFO) Sector

EPA received many comments from the animal agricultural sector in response to the proposed rule. Although this rule only changes the mode of transmission of NPDES information from paper-based reports to electronic reporting and does not address EPA's practices for managing and sharing that information, EPA received comments regarding privacy, security, management of confidential business information, and EPA's current practice of posting inspection information on unpermitted CAFOs and Animal Feeding Operations (AFOs) on its public Web site [Enforcement and Compliance History Online (ECHO)—*http://echo.epa.gov*]. EPA used the supplemental notice to the proposed rule to clarify the effects of the proposed rule on CAFOs in response to these comments (see 1 December 2014; 79 FR 71073).

This final rule would only require CAFOs with NPDES permits to submit information that the Clean Water Act and existing regulations already requires them to provide to permitting authorities. See 33 U.S.C. 1342. The final rule simply modernizes the format through which permitted CAFOs would submit certain types of information by requiring electronic submission as opposed to paper-based reporting. This modernized format will increase efficiencies for permitted CAFOs as well as regulators. Additionally, under this final rule a permitted CAFO can also request a temporary waiver from electronic reporting consistent with authorized NPDES program's implementation plan.

EPA also solicited comments in the supplemental notice to the proposed rule on whether it should change its current practice and begin masking facility information for unpermitted CAFOs and AFOs that EPA or state inspectors found were not discharging and do not require an NPDES permit. EPA published the following example (See Table 9) in the supplemental notice to the proposed rule showing how EPA could mask these data and solicited comments on this approach.

TABLE 9—PROPOSED HYPOTHETICAL EXAMPLE OF MASKING UNPERMITTED CAFOS AND AFOS THAT STATE INSPECTORS FOUND WERE NOT DISCHARGING AND DO NOT REQUIRE AN NPDES PERMIT

| Facility #1 | Facility #2 |
|---|---|
| Show-Me State Animal Farm; Location: 11300 Ozark Lane, Perryville, Missouri 63775; County: Perry; Lat.: 37.836084, Long: -89.738644; Inspection(s): 3/14/2010 (no violation identified); 6/22/2014 (discharging without an NPDES permit). | Unpermitted CAFO/AFO–0000001; Location: Missouri; County: Redacted from Website; Lat./Lon.: Redacted from Website; Inspection(s): 2/17/2009 (no violation identified); 5/25/2013 (no violation identified) |

In this hypothetical example, the unpermitted CAFO shown in the column labeled ''Facility #1'' would *not* have its facility and contact information displayed on EPA's public Web site *until* the weekly refresh of ECHO data from ICIS–NPDES after 22 June 2014, which is the date the state or EPA Region identified that the facility had a Clean Water Act violation (*i.e.,* discharging without an NPDES permit) and entered these data into ICIS–NPDES. If an unpermitted CAFO does not have a Clean Water Act violation as determined by the authorized NPDES program or EPA, then the facility and contact information would not be displayed on EPA's ECHO Web site (see the column labeled ''Facility #2'' in the above table).

EPA also solicited input on potential changes to its national NPDES data system (ICIS–NPDES), which are necessary to provide authorized NPDES programs and Regions with the capability to identify these non-permitted CAFO/AFOs that do not require an NPDES permit (1 December 2014; 79 FR 71080).

Comments from the animal agricultural sector were in favor of this proposed approach while other commenters (*e.g.,* environmental advocacy groups) were not. Some authorized NPDES programs also support this as a reasonable approach in balancing the competing interests of privacy and public access to these data. Separate from this rulemaking, in light of concerns raised regarding the privacy interests of an unpermitted CAFO or AFO that an authorized NPDES program or EPA has assessed and found to have not violated the Clean Water Act, EPA will change its current practice and mask on the ECHO public Web site the related facility-specific facility information (see Table 9).

EPA will implement this data masking in an iterative, two-step process. EPA is using a two-step process because unpermitted facilities in EPA's national NPDES data system (ICIS–NPDES) cannot currently be identified by CAFO permit component data. As a first step, EPA will use other currently available data in ICIS–NPDES to identify unpermitted CAFOs or AFOs that an authorized NPDES program or EPA have assessed and not found any Clean Water Act violations (see DCN 0207). EPA plans to implement this interim approach by the effective date of this final rule.

EPA plans to supersede the first approach with a second data masking approach outlined in the supplemental notice to the proposed rule (1 December 2014; 79 FR 71080). The second data masking approach will only use CAFO permit component data to identify unpermitted CAFOs and AFOs (see DCN 0207). This second approach will take more time to implement as upgrades to ICIS–NPDES and coordination with authorized NPDES programs are necessary to identify the *exact* set of unpermitted CAFOs and AFOs that an authorized NPDES program or EPA has assessed and found to have not violated the Clean Water Act. EPA anticipates it will need a year after the final rule to adopt this second data masking approach.

## VIII. Statutory and Executive Order Reviews

### *A. Executive Order 12866: Regulatory Planning and Review and Executive Order 13563: Improving Regulation and Regulatory Review*

This action is a ''significant regulatory action'' that was submitted to the Office of Management and Budget (OMB) for review. Any changes made in response to OMB's recommendations are documented in the docket. In addition, EPA prepared a detailed analysis of the

potential costs, savings, and benefits of this action. That analysis, the ''Economic Analysis of the NPDES Electronic Reporting Rule (Final),'' can be found in the EPA docket (see DCN 0197), and is summarized in Section VI.

*B. Paperwork Reduction Act*

The Office of Management and Budget (OMB) has approved the information collection activities contained in this rule under the PRA and has assigned OMB control number 2020–0035. The ICR may be found in the docket for this rule (see DCN 0237), and it is briefly summarized here.

EPA is promulgating this final regulation to allow better allocation and use of limited program resources and enhance transparency by providing a timelier, complete, more accurate, and nationally-consistent set of data about the NPDES program.

The projected burden and cost of the final regulation are summarized in Table 10. Note that, consistent with the Information Collection Request (ICR), these estimates reflect the net burden and cost to regulated facilities and states, tribes, and territories over the first three years following promulgation of the rule (as ICRs are limited to three years; however, they can be renewed).

TABLE 10—PROJECTED BURDEN AND COST OVER THE FIRST THREE YEARS OF THE FINAL RULE

| Unit of Analysis | Affected entity | |
|---|---|---|
| | Regulated entities | States |
| Average Annual Number of Respondents [a] | 213,349 | 47 |
| Average Annual Number of Responses | 78,477 | 1,135,376 |
| Average Annual Incremental Burden (hours) | 118,577 | −315,814 |
| Average Annual Incremental Cost | $6,867,716 | −$1,072,586 |
| Average Annual Incremental Burden per Respondent (hours) | 0.56 | −6,719 |
| Average Annual Incremental Burden per Response (hours) | 1.51 | −0.28 |
| Average Annual Incremental Cost per Respondent | $32.19 | −$22,821 |
| Average Annual Incremental Cost per Response | $87.51 | −$0.94 |

[a] The number of respondents includes regulated entities that both submit information (a response) and experience a cost or cost savings while the number of responses is limited to a count of information submissions. Thus, there are more affected respondents than responses.

An agency may not conduct or sponsor, and a person is not required to respond to, a collection of information unless it displays a currently valid OMB control number. The OMB control numbers for the EPA's regulations in 40 CFR are listed in 40 CFR part 9. In addition, the EPA is amending the table in 40 CFR part 9 to list the regulatory citations for the information collection activities contained in this final rule.

*C. Regulatory Flexibility Act*

I certify that this action will not have a significant economic impact on a substantial number of small entities under the RFA. The small entities subject to the requirements of this action are small businesses (*e.g.,* industrial sectors, electricity generating facilities, and agricultural sectors) and small governmental jurisdictions (*e.g.,* POTWs operated by municipalities).

The Agency has determined that 108,035 of 108,036 (99.99%) small entities considered in this analysis will experience an impact of less than 1% percent of revenues. Details of this analysis are presented in Chapter 5 of the following document in the rulemaking docket, ''Economic Analysis of the NPDES Electronic Reporting Rule (Final),'' (see DCN 0197).

*D. Unfunded Mandates Reform Act (UMRA)*

This final rule does not contain an unfunded mandate of $100 million as described in UMRA, 2 U.S.C. 1531–1538, and does not significantly or uniquely affect small governments. EPA conducted an economic analysis examining various options including the potential burden to state, tribal, and territorial governments. EPA estimates that the rule would not only cost states, tribes, territories, and local governments well below the threshold of $100 million, it will actually result in cost savings over time.

*E. Executive Order 13132: Federalism*

This action may have federalism implications, because it imposes substantial direct compliance costs on state or local governments, and the federal government will not provide the funds necessary to pay those costs. Specifically, EPA estimates costs to state governments of greater than $25 million during the first year of rule implementation.

The EPA provides the following federalism summary impact statement. The EPA consulted with state and local officials early in the process of developing the rule to permit them to have meaningful and timely input into its development. In developing the regulatory options described in this final action, EPA held a series of 49 outreach activities with state and local governments, on various aspects of the rule, including a Federalism consultation process that began in 2010, well before this action was proposed. The Environmental Council of the States, the National League of Cities, the U.S. Conference of Mayors, the National Conference of State Legislators, the Council of State Governments, the National Governors Association, and the National Association of Clean Water Agencies were among the intergovernmental groups participating in this process, along with numerous state and local government principals from across the nation.

After publication of the proposed rule, EPA also held teleconferences with authorized NPDES programs to obtain their individual views on various aspects of the proposed rule. EPA met with over twenty five states, ECOS, ACWA, and New England Interstate Water Pollution Control Commission to take into account their individual comments and concerns about the rule (see DCN 0128 to 0142, 0181, 0219 to 0229). Additionally, EPA separately contacted each authorized NPDES program to individually assess its readiness for these new electronic reporting requirements. This extensive outreach helped inform the implementation process of the final rule and the additional flexibilities that authorized states, tribes, and territories need for a measured and orderly conversion from paper to electronic reporting.

EPA specifically solicited comment on the proposed action from State and local officials. EPA received comments from over one hundred (100) entities representing State and local governments. Of these comments, many

were supportive of the rule and its goals. Commentators expressed support for the rule for a number of reasons, including its ability to modernize and streamline the reporting process, its efficiency and cost-effectiveness, and its ability to offer quicker access to standardized data. Several commentators expressed hope that electronic reporting could reduce errors in ICIS–NPDES, make errors more quick and easy to correct, and expedite permit applications.

While most commenters were supportive of the proposed rule, there were several concerns that were raised by the responding state and local governments. One of the most frequently commented subjects was the implementation schedule. Many commenters noted that the proposed two phase (one year per phase) implementation schedule was ''too aggressive.'' EPA addressed this comment by modifying the compliance schedule in the final rule to allow five years for the second phase of implementation.

The other main comment from state and local governments was for EPA to provide authorized NPDES programs with additional flexibility in the implementation of the final rule. As noted in this preamble and in EPA's response to comments document for this rulemaking, EPA has provided authorized NPDES programs with additional flexibility for implementing this final rule. In particular, EPA has given authorized NPDES programs more flexibility in how they administer waivers from electronic reporting. In the proposed rule, EPA solicited comment on limiting waivers from electronic reporting to one year and only to areas with limited access to broadband internet. After consultation with authorized NPDES programs, EPA has eliminated the condition of limited access to broadband internet as an eligibility factor for an electronic reporting waiver. Instead, EPA has provided authorized NPDES programs with the ability to grant waivers to facilities for up to five years and for any factors that they deem appropriate.

Additionally, authorized NPDES programs asked for more flexibility in how they implement electronic reporting for the construction stormwater sector. In particular, states requested an option to allow construction operators to electronically submit data without CROMERR authentication. After consultation with authorized NPDES programs, EPA has included an option, which first suggested by an authorized NPDES program, to allow construction operators to simultaneously submit NPDES program data electronically without CROMERR authentication as long as they also submit these data on paper with a handwritten signature. This ''Hybrid Approach'' is discussed in the preamble to this final rule. This additional flexibility will allow states to electronically collect and manage data on construction sites and will also allow construction operators to submit their NOIs without having to first obtain CROMERR authentication.

Finally, as a means to ''fill in the gaps'' where NPDES-regulated entities are not yet reporting electronically, EPA will use its authority, as appropriate, to issue targeted individual notices requiring NPDES-regulated entities to electronically report their NPDES program data (appendix A to 40 CFR part 127). EPA initially proposed to have these data come directly to EPA. Authorized NPDES programs suggested that instead EPA should require NPDES regulated entities to use state, tribe, or territorial electronic reporting systems that are in compliance with the final rule, as this would be more efficient. In this final rule, EPA is adopting the approach recommended by authorized NPDES programs.

A complete list of the comments from State and local governments has been provided to the Office of Management and Budget and has been placed in the docket for this rulemaking. In addition, the detailed response to comments from these entities is contained in EPA's response to comments document for this rulemaking (see DCN 0218).

*F. Executive Order 13175: Consultation and Coordination With Indian Tribal Governments*

This action has tribal implications. However, it will neither impose substantial direct compliance costs on federally recognized tribal governments, nor preempt tribal law. Although no tribes have yet received approval from EPA to implement an authorized NPDES program, this final rule will impose electronic reporting requirements on tribal facilities and on facilities operating on tribal lands.

EPA consulted with tribal representatives in developing this rule via conference calls and webinars with the National Tribal Caucus and National Tribal Water Counsel in November 2010 (DCN 0232). No concerns were raised during those consultations.

In addition, EPA mailed information to 563 tribes regarding an opportunity to participate in two additional tribal outreach efforts in December 2010.

As required by section 7(a), the EPA's Tribal Consultation Official has certified that the requirements of the executive order have been met in a meaningful and timely manner. A copy of the certification is included in the docket for this action.

*G. Executive Order 13045: Protection of Children From Environmental Health Risks and Safety Risks*

EPA interprets Executive Order 13045 as applying only to those regulatory actions that concern health or safety risks that the EPA has reason to believe may disproportionately affect children, per the definition of ''covered regulatory action'' in section 2–202 of the Executive Order. This action is not subject to Executive Order 13045 because it does not concern an environmental health risk or safety risk.

*H. Executive Order 13211: Actions Concerning Regulations That Significantly Affect Energy Supply, Distribution, or Use*

This action is not a ''significant energy action'' because it is not likely to have a significant adverse effect on the supply, distribution, or use of energy.

*I. National Technology Transfer and Advancement Act*

This rulemaking involves environmental monitoring or measurement. Consistent with the Agency's Performance Based Measurement System (''PBMS''), EPA has decided to allow the use of any method that meets the prescribed performance criteria. The PBMS approach is intended to be more flexible and cost-effective for the regulated community; it is also intended to encourage innovation in analytical technology and improved data quality. EPA is not precluding the use of any method, whether it constitutes a voluntary consensus standard or not, as long as it meets the performance criteria specified.

EPA has decided to use the following data standards, which were developed by the Exchange Network Leadership Council (ENLC). This entity governs the National Environmental Information Exchange Network (NEIEN). The ENLC identifies, prioritizes, and pursues the creation of data standards for those areas where information exchange standards will provide the most value in achieving environmental results. The ENLC involves tribes and tribal nations, state, and federal agencies in the development of the standards. More information about ENLC is available at *www.exchangenetwork.net.*

- *Enforcement and Compliance Data Standard, Standard No.: EX000026.2, July 30, 2008.* This data standard

identifies and defines the major areas of enforcement and compliance information that could be used for the exchange of data among environmental agencies and other entities. The purpose of the standard is to provide a common lexicon, so that information about functionally similar activities and/or instruments can be stored and to provide and receive data in a clearly defined and uniform way.

• *Permitting Information Data Standard, Standard No.: EX000021.2, January 6, 2006.* This data standard should be used in this regulation because it specifies the key data groupings necessary for the consistent identification of information pertaining to permits of interest to environmental information exchange partners. This data standard provides a minimum set of data, which need to be reported for permitting information such as permit name, number, type, organization or facility name, and affiliation type.

• *Facility Site Identification Data Standard, Standard No.: EX000020.2, January 6, 2006.* The purpose of this data standard is to identify a facility of environmental interest. This data standard should be used in this regulation because it provides for the unique identification of facilities regulated or monitored by EPA, states, tribes, and territories. Each facility is assigned a unique facility identification number, which identifies information for the facility specified. This standard provides and describes data groupings that are used to exchange facility site identification data and information. This standard helps EPA, states, tribes, and territories integrate and share facility information across multiple information systems, programs, and governments.

• *Contact Information Data Standard, Standard No.: EX000019.2, January 6, 2006.* This data standard should be used in this regulation because it provides information regarding the source of contact. This standard offers data groupings that are used to describe a point of contact, address, and communication information. For example, the data grouping ''Point of Contact'' subdivides to lower levels such as individual, affiliation, and organization. These intermediate data groupings are further defined at the elemental levels with Name, Title, Code, and Prefix.

• *Representation of Date and Time Data Standard, Standard No.: EX000013.1, January 6, 2006.* This data standard should be used in this regulation because it provides and describes data groupings that are used for exchange of Date and Time data and information. The standard provides information on the high level, intermediate, and elemental representation of date and time data groupings.

• *Latitude/Longitude Data Standard, Standard No.: EX000017.2, January 6, 2006.* This data standard should be used in this regulation because it establishes the requirements for documenting latitude and longitude coordinates and related method, accuracy, and description data for all places used in the data exchange transaction. Places include facilities, sites, monitoring stations, observations points, and other regulated or tracked features. This standard describes data and data groupings that are used to exchange latitude and longitude data and information. The purpose of the standard is to provide a common set of data to use for recording horizontal and vertical coordinates and associated metadata that define a point on the earth.

• *SIC/NAICS Data Standard, Standard No.: EX000022.2, January 6, 2006.* This data standard should be used in this regulation because it provides a common set of data groupings to specify a way to classify business activities, including industry classifications, product classifications, and product codes. This data standard provides information on business activity according to the Standard Industrial Classification (SIC) and North American Industrial Classification System (NAICS).

*J. Executive Order 12898: Federal Actions To Address Environmental Justice in Minority Populations and Low-Income Populations*

EPA has determined that this final rule will not have disproportionately high and adverse human health or environmental effects on minority or low-income populations because it does not affect the level of protection provided to human health or the environment. This final rule offers substantial environmental justice benefits. As described in the context of non-monetary benefits, discussed in Section VI and described below, the final rule would significantly increase transparency and access to crucial information that is relevant to the protection of the health and environment of minority, low income, and tribal populations.

*K. Congressional Review Act (CRA)*

This action is subject to the CRA, and the EPA will submit a rule report to each House of the Congress and to the Comptroller General of the United States. This action is not a ''major rule'' as defined by 5 U.S.C. 804(2).

**List of Subjects**

*40 CFR Part 9*

Environmental protection, Reporting and recordkeeping requirements.

*40 CFR Part 122*

Environmental protection, Administrative practice and procedure, Confidential business information, Hazardous substances, Incorporation by reference, Reporting and recordkeeping requirements, Water pollution control.

*40 CFR Part 123*

Environmental protection, Administrative practice and procedure, Confidential business information, Hazardous substances, Indians-lands, Intergovernmental relations, Penalties, Reporting and recordkeeping requirements, Water pollution control.

*40 CFR Part 124*

Environmental protection, Administrative practice and procedure, Air pollution control, Hazardous waste, Indians-lands, Reporting and recordkeeping requirements, Water pollution control, Water supply.

*40 CFR Part 127*

Environmental protection, Administrative practice and procedure, Automatic data processing, Electronic data processing, Hazardous substances, Intergovernmental relations, Reporting and recordkeeping requirements, Sewage disposal, Waste treatment and disposal, Water pollution control.

*40 CFR Part 403*

Environmental protection, Confidential business information, Reporting and recordkeeping requirements, Waste treatment and disposal, Water pollution control.

*40 CFR Part 501*

Environmental protection, Administrative practice and procedure, Indians-lands, Intergovernmental relations, Penalties, Reporting and recordkeeping requirements, Sewage disposal.

*40 CFR Part 503*

Environmental protection, Reporting and recordkeeping requirements, Sewage disposal.

Dated: September 24, 2015.

**Gina McCarthy,**

*Administrator.*

For the reasons cited in the preamble, title 40, chapter I is amended as follows:

## PART 9—OMB APPROVALS UNDER THE PAPERWORK REDUCTION ACT

■ 1. The authority citation for part 122 continues to read as follows:

**Authority:** 7 U.S.C. 135 *et seq.,* 136–136y; 15 U.S.C. 2001, 2003, 2005, 2006, 2601–2671; 21 U.S.C. 331j, 346a, 31 U.S.C. 9701; 33 U.S.C. 1251 *et seq.,* 1311, 1313d, 1314, 1318, 1321, 1326, 1330, 1342, 1344, 1345 (d) and (e), 1361; E.O. 11735, 38 FR 21243, 3 CFR, 1971–1975 Comp. p. 973; 42 U.S.C. 241, 242b, 243, 246, 300f, 300g, 300g–1, 300g–2, 300g–3, 300g–4, 300g–5, 300g–6, 300j–1, 300j–2, 300j–3, 300j–4, 300j–9, 1857 *et seq.,* 6901–6992k, 7401–7671q, 7542, 9601–9657, 11023, 11048.

■ 2. In § 9.1, the table is amended by adding the following section in numerical order under a new heading titled ''NPDES Electronic Reporting'' to read as follows:

**§ 9.1 OMB approvals under the Paperwork Reduction Act.**

* * * * *

| 40 CFR citation | OMB control No. |
|---|---|
| * * * * * | |
| **NPDES Electronic Reporting** | |
| 127.26 | 2020–0035. |
| * * * * * | |

* * * * *

## PART 122—EPA ADMINISTERED PERMIT PROGRAMS: THE NATIONAL POLLUTANT DISCHARGE ELIMINATION SYSTEM

■ 3. The authority citation for part 122 continues to read as follows:

**Authority:** The Clean Water Act, 33 U.S.C. 1251 *et seq.*

■ 4. Amend § 122.22 by adding paragraph (e) to read as follows:

**§ 122.22 Signatories to permit applications and reports (applicable to State programs, see § 123.25).**

* * * * *

(e) *Electronic reporting.* If documents described in paragraph (a) or (b) of this section are submitted electronically by or on behalf of the NPDES-regulated facility, any person providing the electronic signature for such documents shall meet all relevant requirements of this section, and shall ensure that all of the relevant requirements of 40 CFR part 3 (including, in all cases, subpart D to part 3) (Cross-Media Electronic Reporting) and 40 CFR part 127 (NPDES Electronic Reporting Requirements) are met for that submission.

* * * * *

■ 5. Amend § 122.26 by:

■ a. Revising paragraphs (b)(15)(i)(A) and (g)(1)(iii).

■ b. Adding paragraph (b)(15)(i)(C).

The revisions and addition read as follows:

**§ 122.26 Storm water discharges (applicable to State NPDES programs, see § 123.25).**

(b) * * *

(15) * * *

(i) * * *

(A) The value of the rainfall erosivity factor (''R'' in the Revised Universal Soil Loss Equation) is less than five during the period of construction activity. The rainfall erosivity factor is determined in accordance with Chapter 2 of Agriculture Handbook Number 703, Predicting Soil Erosion by Water: A Guide to Conservation Planning with the Revised Universal Soil Loss Equation (RUSLE), pages 21–64, dated January 1997. The Director of the **Federal Register** approves this incorporation by reference in accordance with 5 U.S.C. 552(a) and 1 CFR part 51. Copies may be obtained at EPA's Water Docket, 1200 Pennsylvania Avenue NW, Washington, DC 20460. For information on the availability of this material at National Archives and Records Administration, call 202–741–6030, or go to: *http://www.archives.gov/federal_register/code_of_federal_regulations/ibr_locations.html.* An operator must certify to the Director that the construction activity will take place during a period when the value of the rainfall erosivity factor is less than five; or

* * * * *

(C) As of December 21, 2020 all certifications submitted in compliance with paragraphs (b)(15)(i)(A) and (B) of this section must be submitted electronically by the owner or operator to the Director or initial recipient, as defined in 40 CFR 127.2(b), in compliance with this section and 40 CFR part 3 (including, in all cases, subpart D to part 3), § 122.22, and 40 CFR part 127. Part 127 is not intended to undo existing requirements for electronic reporting. Prior to this date, and independent of part 127, owners or operators may be required to report electronically if specified by a particular permit or if required to do so by state law.

* * * * *

(g) * * *

(1) * * *

(iii) Submit the signed certification to the NPDES permitting authority once every five years. As of December 21, 2020 all certifications submitted in compliance with this section must be submitted electronically by the owner or operator to the Director or initial recipient, as defined in 40 CFR 127.2(b), in compliance with this section and 40 CFR part 3 (including, in all cases, subpart D to part 3), § 122.22, and 40 CFR part 127. Part 127 is not intended to undo existing requirements for electronic reporting. Prior to this date, and independent of part 127, owners or operators may be required to report electronically if specified by a particular permit or if required to do so by state law.

* * * * *

■ 6. Amend § 122.28 by revising paragraphs (b)(2)(i) and (ii) to read as follows:

**§ 122.28 General permits (applicable to State NPDES programs, see § 123.25).**

* * * * *

(b) * * *

(2) * * *

(i) Except as provided in paragraphs (b)(2)(v) and (vi) of this section, dischargers (or treatment works treating domestic sewage) seeking coverage under a general permit shall submit to the Director a notice of intent to be covered by the general permit. A discharger (or treatment works treating domestic sewage) who fails to submit a notice of intent in accordance with the terms of the permit is not authorized to discharge, (or in the case of sludge disposal permit, to engage in a sludge use or disposal practice), under the terms of the general permit unless the general permit, in accordance with paragraph (b)(2)(v), contains a provision that a notice of intent is not required or the Director notifies a discharger (or treatment works treating domestic sewage) that it is covered by a general permit in accordance with paragraph (b)(2)(vi). A complete and timely, notice of intent (NOI), to be covered in accordance with general permit requirements, fulfills the requirements for permit applications for purposes of §§ 122.6, 122.21, and 122.26. As of December 21, 2020 all notices of intent submitted in compliance with this section must be submitted electronically by the discharger (or treatment works treating domestic sewage) to the Director or initial recipient, as defined in 40 CFR 127.2(b), in compliance with this section and 40 CFR part 3 (including, in all cases, subpart D to part 3), § 122.22, and 40 CFR part 127. Part 127 is not intended to undo existing requirements for electronic reporting. Prior to this date, and independent of part 127, discharger (or treatment works treating domestic sewage) may be required to report electronically if

specified by a particular permit or if required to do so by state law.

(ii) The contents of the notice of intent shall be specified in the general permit and shall require the submission of information necessary for adequate program implementation, including at a minimum, the legal name and address of the owner or operator, the facility name and address, type of facility or discharges, the receiving stream(s), and other required data elements as identified in appendix A to part 127. General permits for stormwater discharges associated with industrial activity from inactive mining, inactive oil and gas operations, or inactive landfills occurring on Federal lands where an operator cannot be identified may contain alternative notice of intent requirements. All notices of intent shall be signed in accordance with § 122.22. Notices of intent for coverage under a general permit for concentrated animal feeding operations must include the information specified in § 122.21(i)(1), including a topographic map.

* * * * *

■ 7. Amend § 122.34 by revising paragraph (g)(3) introductory text to read as follows:

**§ 122.34 As an operator of a regulated small MS4, what will my NPDES MS4 storm water permit require?**

* * * * *

(g) * * *

(3) *Reporting.* Unless you are relying on another entity to satisfy your NPDES permit obligations under § 122.35(a), you must submit annual reports to the NPDES permitting authority for your first permit term. For subsequent permit terms, you must submit reports in year two and four unless the NPDES permitting authority requires more frequent reports. As of December 21, 2020 all reports submitted in compliance with this section must be submitted electronically by the owner, operator, or the duly authorized representative of the small MS4 to the Director or initial recipient, as defined in 40 CFR 127.2(b), in compliance with this section and 40 CFR part 3 (including, in all cases, subpart D to part 3), § 122.22, and 40 CFR part 127. Part 127 is not intended to undo existing requirements for electronic reporting. Prior to this date, and independent of part 127, the owner, operator, or the duly authorized representative of the small MS4 may be required to report electronically if specified by a particular permit or if required to do so by state law. Your report must include:

* * * * *

■ 8. Amend § 122.41 by:

■ a. Revising paragraphs (l)(4)(i), (l)(6)(i), (l)(7), and (m)(3).

■ b. Adding paragraph (l)(9).

The revisions and addition read as follows:

**§ 122.41 Conditions applicable to all permits (applicable to State programs, see § 123.25).**

* * * * *

(l) * * *

(4) * * *

(i) Monitoring results must be reported on a Discharge Monitoring Report (DMR) or forms provided or specified by the Director for reporting results of monitoring of sludge use or disposal practices. As of December 21, 2016 all reports and forms submitted in compliance with this section must be submitted electronically by the permittee to the Director or initial recipient, as defined in 40 CFR 127.2(b), in compliance with this section and 40 CFR part 3 (including, in all cases, subpart D to part 3), § 122.22, and 40 CFR part 127. Part 127 is not intended to undo existing requirements for electronic reporting. Prior to this date, and independent of part 127, permittees may be required to report electronically if specified by a particular permit or if required to do so by state law.

* * * * *

(6) * * *

(i) The permittee shall report any noncompliance which may endanger health or the environment. Any information shall be provided orally within 24 hours from the time the permittee becomes aware of the circumstances. A report shall also be provided within 5 days of the time the permittee becomes aware of the circumstances. The report shall contain a description of the noncompliance and its cause; the period of noncompliance, including exact dates and times), and if the noncompliance has not been corrected, the anticipated time it is expected to continue; and steps taken or planned to reduce, eliminate, and prevent reoccurrence of the noncompliance. For noncompliance events related to combined sewer overflows, sanitary sewer overflows, or bypass events, these reports must include the data described above (with the exception of time of discovery) as well as the type of event (combined sewer overflows, sanitary sewer overflows, or bypass events), type of sewer overflow structure (*e.g.,* manhole, combine sewer overflow outfall), discharge volumes untreated by the treatment works treating domestic sewage, types of human health and environmental impacts of the sewer overflow event, and whether the noncompliance was related to wet weather. As of December 21, 2020 all reports related to combined sewer overflows, sanitary sewer overflows, or bypass events submitted in compliance with this section must be submitted electronically by the permittee to the Director or initial recipient, as defined in 40 CFR 127.2(b), in compliance with this section and 40 CFR part 3 (including, in all cases, subpart D to part 3), § 122.22, and 40 CFR part 127. Part 127 is not intended to undo existing requirements for electronic reporting. Prior to this date, and independent of part 127, permittees may be required to electronically submit reports related to combined sewer overflows, sanitary sewer overflows, or bypass events under this section by a particular permit or if required to do so by state law. The Director may also require permittees to electronically submit reports not related to combined sewer overflows, sanitary sewer overflows, or bypass events under this section.

* * * * *

(7) *Other noncompliance.* The permittee shall report all instances of noncompliance not reported under paragraphs (l)(4), (5), and (6) of this section, at the time monitoring reports are submitted. The reports shall contain the information listed in paragraph (l)(6). For noncompliance events related to combined sewer overflows, sanitary sewer overflows, or bypass events, these reports shall contain the information described in paragraph (l)(6) and the applicable required data in appendix A to 40 CFR part 127. As of December 21, 2020 all reports related to combined sewer overflows, sanitary sewer overflows, or bypass events submitted in compliance with this section must be submitted electronically by the permittee to the Director or initial recipient, as defined in 40 CFR 127.2(b), in compliance with this section and 40 CFR part 3 (including, in all cases, subpart D to part 3), § 122.22, and 40 CFR part 127. Part 127 is not intended to undo existing requirements for electronic reporting. Prior to this date, and independent of part 127, permittees may be required to electronically submit reports related to combined sewer overflows, sanitary sewer overflows, or bypass events under this section by a particular permit or if required to do so by state law. The Director may also require permittees to electronically submit reports not related to combined sewer overflows, sanitary sewer overflows, or bypass events under this section.

* * * * *

(9) *Identification of the initial recipient for NPDES electronic reporting data.* The owner, operator, or the duly authorized representative of an NPDES-regulated entity is required to electronically submit the required NPDES information (as specified in appendix A to 40 CFR part 127) to the appropriate initial recipient, as determined by EPA, and as defined in § 127.2(b) of this chapter. EPA will identify and publish the list of initial recipients on its Web site and in the **Federal Register,** by state and by NPDES data group [see § 127.2(c) of this chapter]. EPA will update and maintain this listing.

* * * * *

(m) * * *

(3) *Notice*—(i) *Anticipated bypass.* If the permittee knows in advance of the need for a bypass, it shall submit prior notice, if possible at least ten days before the date of the bypass. As of December 21, 2020 all notices submitted in compliance with this section must be submitted electronically by the permittee to the Director or initial recipient, as defined in 40 CFR 127.2(b), in compliance with this section and 40 CFR part 3 (including, in all cases, subpart D to part 3), § 122.22, and 40 CFR part 127. Part 127 is not intended to undo existing requirements for electronic reporting. Prior to this date, and independent of part 127, permittees may be required to report electronically if specified by a particular permit or if required to do so by state law.

(ii) *Unanticipated bypass.* The permittee shall submit notice of an unanticipated bypass as required in paragraph (l)(6) of this section (24-hour notice). As of December 21, 2020 all notices submitted in compliance with this section must be submitted electronically by the permittee to the Director or initial recipient, as defined in 40 CFR 127.2(b), in compliance with this section and 40 CFR part 3 (including, in all cases, subpart D to part 3), § 122.22, and 40 CFR part 127. Part 127 is not intended to undo existing requirements for electronic reporting. Prior to this date, and independent of part 127, permittees may be required to report electronically if specified by a particular permit or if required to do so by state law.

* * * * *

■ 9. Amend § 122.42 by revising the introductory text in paragraphs (c) and (e)(4) and paragraph (e)(4)(vi) to read as follows:

**§ 122.42 Additional conditions applicable to specified categories of NPDES permits (applicable to State NPDES programs, see § 123.25).**

* * * * *

(c) *Municipal separate storm sewer systems.* The operator of a large or medium municipal separate storm sewer system or a municipal separate storm sewer that has been designated by the Director under § 122.26(a)(1)(v) must submit an annual report by the anniversary of the date of the issuance of the permit for such system. As of December 21, 2020 all reports submitted in compliance with this section must be submitted electronically by the owner, operator, or the duly authorized representative of the MS4 to the Director or initial recipient, as defined in 40 CFR 127.2(b), in compliance with this section and 40 CFR part 3 (including, in all cases, subpart D to part 3), § 122.22, and 40 CFR part 127. Part 127 is not intended to undo existing requirements for electronic reporting. Prior to this date, and independent of part 127, the owner, operator, or the duly authorized representative of the MS4 may be required to report electronically if specified by a particular permit or if required to do so by state law. The report shall include:

* * * * *

(e) * * *

(4) *Annual reporting requirements for CAFOs.* The permittee must submit an annual report to the Director. As of December 21, 2020 all annual reports submitted in compliance with this section must be submitted electronically by the permittee to the Director or initial recipient, as defined in 40 CFR 127.2(b), in compliance with this section and 40 CFR part 3 (including, in all cases, subpart D to part 3), § 122.22, and 40 CFR part 127. Part 127 is not intended to undo existing requirements for electronic reporting. Prior to this date, and independent of part 127, the permittee may be required to report electronically if specified by a particular permit or if required to do so by state law. The annual report must include:

* * * * *

(vi) Summary of all manure, litter and process wastewater discharges from the production area that have occurred in the previous 12 months, including, for each discharge, the date of discovery, duration of discharge, and approximate volume; and

* * * * *

■ 10. Amend § 122.43 by revising paragraph (a) to read as follows:

**§ 122.43 Establishing permit conditions (applicable to State programs, see § 123.25).**

(a) In addition to conditions required in all permits (§§ 122.41 and 122.42), the Director shall establish conditions, as required on a case-by-case basis, to provide for and ensure compliance with all applicable requirements of CWA and regulations. These shall include conditions under §§ 122.46 (duration of permits), 122.47(a) (schedules of compliance), 122.48 (monitoring), electronic reporting requirements of 40 CFR part 3 (Cross-Media Electronic Reporting Regulation) and 40 CFR part 127 (NPDES Electronic Reporting), and, for EPA permits only, §§ 122.47(b) (alternatives schedule of compliance) and 122.49 (considerations under Federal law).

* * * * *

■ 11. Amend § 122.44 by revising paragraph (i)(2) to read as follows:

**§ 122.44 Establishing limitations, standards, and other permit conditions (applicable to State NPDES programs, see § 123.25).**

* * * * *

(i) * * *

(2) Except as provided in paragraphs (i)(4) and (5) of this section, requirements to report monitoring results shall be established on a case-by-case basis with a frequency dependent on the nature and effect of the discharge, but in no case less than once a year. For sewage sludge use or disposal practices, requirements to monitor and report results shall be established on a case-by-case basis with a frequency dependent on the nature and effect of the sewage sludge use or disposal practice; minimally this shall be as specified in 40 CFR part 503 (where applicable), but in no case less than once a year. All results must be electronically reported in compliance with 40 CFR part 3 (including, in all cases, subpart D to part 3), § 122.22, and 40 CFR part 127.

* * * * *

■ 12. Amend § 122.48 by revising paragraph (c) to read as follows:

**§ 122.48 Requirements for recording and reporting of monitoring results (applicable to State programs, see § 123.25).**

* * * * *

(c) Applicable reporting requirements based upon the impact of the regulated activity and as specified in 40 CFR part 3 (Cross-Media Electronic Reporting Regulation), § 122.44, and 40 CFR part 127 (NPDES Electronic Reporting). Reporting shall be no less frequent than specified in § 122.44. EPA will maintain the start dates for the electronic

reporting of monitoring results for each state on its Web site.

■ 13. Amend § 122.63 by adding paragraph (f) to read as follows:

**§ 122.63 Minor modifications of permits.**

* * * * *

(f) Require electronic reporting requirements (to replace paper reporting requirements) including those specified in 40 CFR part 3 (Cross-Media Electronic Reporting Regulation) and 40 CFR part 127 (NPDES Electronic Reporting).

* * * * *

■ 14. Amend § 122.64 by adding paragraph (c) to read as follows:

**§ 122.64 Termination of permits (applicable to State programs, see § 123.25).**

* * * * *

(c) Permittees that wish to terminate their permit must submit a Notice of Termination (NOT) to their permitting authority. If requesting expedited permit termination procedures, a permittee must certify in the NOT that it is not subject to any pending State or Federal enforcement actions including citizen suits brought under State or Federal law. As of December 21, 2020 all NOTs submitted in compliance with this section must be submitted electronically by the permittee to the Director or initial recipient, as defined in 40 CFR 127.2(b), in compliance with this section and 40 CFR part 3 (including, in all cases, subpart D), § 122.22, and 40 CFR part 127. Part 127 is not intended to undo existing requirements for electronic reporting. Prior to this date, and independent of part 127, the permittee may be required to report electronically if specified by a particular permit or if required to do so by state law.

## PART 123—STATE PROGRAM REQUIREMENTS

■ 15. The authority citation for part 123 continues to read as follows:

**Authority:** The Clean Water Act, 33 U.S.C. 1251 *et se.*

■ 16. Amend § 123.22 by adding paragraph (g) to read as follows:

**§ 123.22 Program description.**

* * * * *

(g) A state, tribe, or territory that newly seeks to implement an NPDES program after March 21, 2016 must describe whether the state, tribe, or territory will be the initial recipient of electronic NPDES information from NPDES-regulated facilities for specific NPDES data groups (see 40 CFR 127.2(c) and 127.27). In this program description, the state, tribe, or territory must identify the specific NPDES data groups for which the state, tribe, or territory will be the initial recipient of electronic NPDES information from NPDES-regulated facilities and how the electronic data system of the state, tribe, or territory will be compliant with 40 CFR part 3 (including, in all cases, subpart D to part 3), § 123.26, and 40 CFR part 127.

■ 17. Amend § 123.24 by revising paragraph (b)(3) to read as follows:

**§ 123.24 Memorandum of Agreement with the Regional Administrator.**

* * * * *

(b) * * *

(3) Provisions specifying the frequency and content of reports, documents and other information which the State is required to submit to EPA. The State shall allow EPA to routinely review State records, reports, and files relevant to the administration and enforcement of the approved program. State reports may be combined with grant reports where appropriate. These procedures must also implement the requirements of 40 CFR 123.41(a) and 123.43 and 40 CFR part 127 (including the required data elements in appendix A to part 127).

* * * * *

■ 18. Amend § 123.25 by revising paragraph (a)(46) and the note immediately following it to read as follows:

**§ 123.25 Requirements for permitting.**

(a) * * *

(46) 40 CFR part 3 (Cross-Media Electronic Reporting Regulation) and 40 CFR part 127 (NPDES Electronic Reporting Requirements).

Note to paragraph (a): Except for paragraph (a)(46) of this section, states need not implement provisions identical to the above listed provisions. Implemented provisions must, however, establish requirements at least as stringent as the corresponding listed provisions. While States may impose more stringent requirements, they may not make one requirement more lenient as a tradeoff for making another requirement more stringent; for example, by requiring that public hearings be held prior to issuing any permit while reducing the amount of advance notice of such a hearing.

State programs may, if they have adequate legal authority, implement any of the provisions of parts 122 and 124. See, for example, §§ 122.5(d) (continuation of permits) and 124.4 (consolidation of permit processing) of this chapter.

For example, a State may impose more stringent requirements in an NPDES program by omitting the upset provision of § 122.41 of this chapter or by requiring more prompt notice of an upset.

* * * * *

■ 19. Amend § 123.26 by:

■ a. Revising the introductory text in paragraph (b) and paragraphs (b)(1), (b)(2)(iii), and (e)(1).

■ b. Removing the word ''and'' after semicolon in paragraph (b)(2)(ii).

■ c. Adding paragraphs (b)(2)(iv) and (f).

The revisions and additions read as follows:

**§ 123.26 Requirements for compliance evaluation programs.**

* * * * *

(b) State programs shall have inspection and surveillance procedures to determine, independent of information supplied by regulated persons, compliance or noncompliance with applicable program requirements. The State shall implement and maintain:

(1) An automated, computerized system which is capable of identifying and tracking all facilities and activities subject to the State Director's authority and any instances of noncompliance with permit or other program requirements (*e.g.,* identifying noncompliance with an automated, computerized program to compare permit limits to reported measurements). State programs must maintain a management information system which supports the compliance evaluation activities of this part (*e.g.,* source inventories; compliance determinations based upon discharge monitoring reports, other submitted reports, and determinations of noncompliance made from inspection or document reviews; and subsequent violation notices, enforcement actions, orders, and penalties) and complies with 40 CFR part 3 (Cross-Media Electronic Reporting Regulation) and 40 CFR part 127 (NPDES Electronic Reporting Requirements). State programs may use EPA's national NPDES data system for their automated, computerized system;

(2) * * *

(iii) Verify the adequacy of sampling, monitoring, and other methods used by permittees and other regulated persons to develop that information; and

(iv) Protect surface waters and public health.

* * * * *

(e) * * *

(1) Maintaining an automated, computerized system which is capable of managing the comprehensive electronic inventory of all sources covered by NPDES permits and

generating an electronic schedule of reports required to be submitted by permittees to the State agency. (Note: State programs may use EPA's national NPDES data system for their automated, computerized system.);

* * * * *

(f) A state, tribe, or territory that is designated by EPA as an initial recipient of electronic NPDES information, as defined in § 127.2 of this chapter, must maintain the data it collects and electronically transfer the minimum set of NPDES data to EPA through timely data transfers in compliance with all requirements of 40 CFR parts 3 and 127 (including the required data elements in appendix A to part 127). Timely means that the authorized state, tribe, or territory submits these data transfers (see the data elements in appendix A to 40 CFR part 127) to EPA within 40 days of when the state, tribe, or territory completed the activity or received a report submitted by a regulated entity. For example, the data regarding a state inspection of an NPDES-regulated entity that is finalized by the state on October 5th must be electronically transferred to EPA no later than November 14th of that same year (*e.g.,* 40 days after October 5th). EPA must become the initial recipient of electronic NPDES information from NPDES-regulated entities if the state, tribe, or territory does not consistently maintain these timely data transfers or does not comply with 40 CFR parts 3 and 127. See 40 CFR 127.2(b) and 127.27 regarding the initial recipient.

■ 20. Amend § 123.41 by revising paragraph (a) to read as follows:

**§ 123.41 Sharing of information.**

(a) Any information obtained or used in the administration of a State program shall be available to EPA upon request without restriction. This includes the timely data transfers in compliance with all requirements of 40 CFR parts 3 and 127 (including the required data elements in appendix A to part 127). If the information has been submitted to the State under a claim of confidentiality, the State must submit that claim to EPA when providing information under this section. Any information obtained from a State and subject to a claim of confidentiality will be treated in compliance with the regulations in 40 CFR part 2. If EPA obtains information from an authorized state NPDES program, which is not claimed to be confidential, EPA may make that information available to the public without further notice. Timely means that the authorized state, tribe, or territory submits these data transfers (see the data elements in appendix A to 40 CFR part 127) to EPA within 40 days of when the state, tribe, or territory completed the activity or received a report submitted by a regulated entity. For example, the data regarding a state inspection of an NPDES-regulated entity that is finalized by the state on October 5th must be electronically transferred to EPA no later than November 14th of that same year (*e.g.,* 40 days after October 5th). EPA must become the initial recipient of electronic NPDES information from NPDES-regulated entities if the state, tribe, or territory does not consistently maintain these timely data transfers or does not comply with 40 CFR parts 3 and 127. See 40 CFR 127.2(b) and 127.27 regarding the initial recipient.

* * * * *

■ 21. Amend § 123.43 by revising paragraph (d) to read as follows:

**§ 123.43 Transmission of information to EPA.**

* * * * *

(d) Any State permit program shall keep such records and submit to the Administrator such information as the Administrator may reasonably require to ascertain whether the State program complies with the requirements of the CWA or of this part. This includes the timely data transfers in compliance with all requirements of 40 CFR part 127 (including the required data elements in appendix A to part 127).

■ 22. Revise § 123.45 to read as follows:

**§ 123.45 Noncompliance and program reporting by the Director.**

As of December 21, 2021 EPA must prepare public (quarterly and annual) reports as set forth here from information that is required to be submitted by NPDES-regulated facilities and the State Director.

(a) *NPDES noncompliance reports (NNCR)—quarterly.* EPA must produce an online report on a quarterly basis with the minimum content specified here. The Director must electronically submit timely, accurate, and complete data to EPA that allows EPA to prepare these quarterly NNCRs.

(1) *Content.* The NNCR must include the following information:

(i) A facility specific list of NPDES-regulated entities in violation, including non-POTWs, POTWs, Federal permittees, major facilities, and nonmajor facilities, as well as a list of CWA point sources that did not obtain NPDES permits authorizing discharges of pollutants to waters of the United States.

(ii) For each identified NPDES-regulated entity in violation of the Clean Water Act:

(A) The name, location, and permit number or other identification number, if a permit does not exist.

(B) Information describing identified violation(s) that occurred in that quarter, including the date(s) on which violation(s) started and ended (if applicable). Where applicable, the information must indicate the pipe, parameter, and the effluent limit(s) violated. Violations must be classified as Category I and II as described in paragraph (a)(2) of this section.

(C) The date(s) and type of formal enforcement and written informal enforcement action(s) taken by the Director to respond to violation(s), including any penalties assessed.

(D) The status of the violation(s) (*e.g.,* corrected or continuing, and the date that the violation(s) was resolved), which can be reported by linking violations to specific enforcement actions, or tracking noncompliance end dates.

(E) Any optional details that may help explain the instance(s) of noncompliance as provided by the Director or EPA.

(F) All violations must be reported in successive quarterly reports until the violation(s) is documented as being corrected (*i.e.,* the regulated entity is no longer in violation). After a violation is reported as corrected in the NNCR, that particular violation will not continue to appear in subsequent quarterly reports, although it will appear in the relevant annual report.

(G) If the permittee or discharger is in compliance with an enforcement order (*e.g.,* permittee is completing the necessary upgrades to its existing wastewater treatment system in accordance with the schedule in the enforcement order), and has no new, additional violation(s), the compliance status must be reported as ''resolved pending'' in the NNCR. The permittee/discharger will continue to be listed on the NNCR until the violation(s) is documented as being corrected.

(2) *Violation classifications.* A violation must be classified as ''Category I Noncompliance'' if one or more of the criteria set forth below are met.

(i) *Reporting violations.* These include failure to submit a complete, required report (*e.g.,* final compliance schedule progress report, discharge monitoring report, annual report) within 30 days after the date established in a permit, administrative or judicial order, or regulation. In addition, these also include any failure to comply with the

reporting requirements at 40 CFR 122.41(l)(6).

(ii) *Compliance construction violations.* These include failure to start construction, complete construction, or achieve final compliance within 90 days after the date established in a permit, administrative or judicial order, or regulation.

(iii) *Effluent limits.* These include violations of interim or final effluent limits established in a permit, administrative or judicial enforcement order, or regulation that exceed the ''Criteria for Noncompliance Reporting in the NPDES Program'' in appendix A to § 123.45.

(iv) *Compliance schedule violations.* These include violations of any requirement or condition in permits, or administrative or judicial enforcement orders, excluding reporting violations, compliance construction milestones and effluent limits.

(v) *Non-numeric effluent limit violations.* These include violations of non-numeric effluent limits (*e.g.,* violations of narrative permit requirements or requirements to implement best management practices) that caused or could cause water quality impacts. Examples of such impacts on water quality include, but are not limited to, unauthorized discharges that may have caused or contributed to exceedances in water quality standards, fish kills, oil sheens, beach closings, fishing bans, restrictions on designated uses, and unauthorized bypass or pass through or interference with the operations of a POTW (see 40 CFR 403.3).

(vi) *Other violations.* These include any violation or group of violations, which in the discretion of the Director or EPA, are considered to be of concern. These violations include repeat violations by a specific point source, geographic clusters of violations, corporations with violations at multiple facilities, or industrial sectors with identified patterns of violation that have a cumulative impact on water quality, but otherwise would not meet Category I criteria. EPA must determine whether to issue policy or guidance to provide more specificity on identifying these types of violations and how to report them.

(vii) All other types of noncompliance that do not meet the criteria for Category I Noncompliance must be classified as ''Category II Noncompliance.''

(3) EPA must provide an easy-to-use interface to facilitate public access, use, and understanding of the NNCR, including the ability to sort violations by duration, severity, frequency, detection method (*e.g.,* self-reported effluent, monitoring, inspection), flow and pollutant loadings, type of discharger, waterbody receiving the discharge, proximity to impaired waters, and category of violation (I or II). EPA must exclude from public release any confidential business information or enforcement-sensitive information associated with the NNCR.

(b) *NPDES noncompliance reports—annual summary (annual).* EPA must prepare annual public reports that provide a summary of compliance monitoring and enforcement activities within each state, tribe, and territory, as well as summary information on violations identified in the four quarterly NNCRs for that federal fiscal year. EPA must provide these annual reports by no later than March 1st of the following year.

(1) *Facility types covered by reports.* EPA must produce, at a minimum, Annual Summary Reports for the following universes: Individually-permitted NPDES-regulated entities; all other NPDES-regulated entities that are not individually permitted; Clean Water Act point sources that had unauthorized discharge(s) of pollutants to waters of the US; and a combined report that includes totals across all three reports above. Individually-permitted facilities are defined in this subsection as those permits that are unique to the permittee, that include permitted effluent limits, and require the submission of discharge monitoring reports.

(2) *Content of reports.* Reports must include applicable data for NPDES-regulated entities:

(i) The number of NPDES permittees;

(ii) The number inspected by on-site inspections;

(iii) The number reviewed in which permitted limits were compared to measured data to determine violations;

(iv) The number evaluated by other, off-site compliance monitoring activities;

(v) The number with any violations;

(vi) The number with Category I violations;

(vii) The number receiving paper or electronic written informal enforcement actions;

(viii) The total number receiving formal enforcement actions with a compliance schedule;

(ix) The total number receiving a penalty assessment;

(x) The total amount of penalties assessed; and

(xi) The number of permit modifications extending compliance deadlines more than one year.

(c) *Schedule for producing NNCR quarterly information.* (1) The Director has until 45 days from the end of the calendar quarter to update or correct NPDES data submissions in EPA's national NPDES data system for events that occurred within that calendar quarter covered by the NNCR.

(2) EPA must publish the NNCR in electronic form to be easily accessible and available to the public within two months after the end date of the calendar quarter:

EPA SCHEDULE FOR QUARTERLY NNCR

| Calendar quarter | EPA NNCR publication date for calendar quarter |
|---|---|
| January, February, March | May 31. |
| April, May, June | August 31. |
| July, August, September | November 30. |
| October, November, and December. | Last Day in February. |

## Appendix A to § 123.45—Criteria for Category I Noncompliance Reporting in the NPDES Program

This appendix describes the criteria for reporting Category I violations of NPDES permit effluent limits in the NPDES non-compliance report (NNCR) as specified under paragraph (a)(2)(C) of this section. Any violation of an NPDES permit is a violation of the Clean Water Act (CWA) for which the permittee is liable. As specified in paragraph (a)(2) of this section, there are two categories of noncompliance, and the table below indicates the thresholds for violations in Category I. An agency's decision as to what enforcement action, if any, should be taken in such cases, shall be based on an analysis of facts, legal requirements, policy, and guidance.

*Violations of Permit Effluent Limits*

The categorization of permit effluent limits depends upon the magnitude and/or frequency of the violation. Effluent violations shall be evaluated on a parameter-by-parameter and outfall-by-outfall basis. The criteria for reporting effluent violations are as follows:

a. Reporting Criteria for Category I Violations of Monthly Average Permit Limits—Magnitude and Frequency

Violations of monthly average effluent limits which exceed or equal the product of the Technical Review Criteria (TRC) times the effluent limit, and occur two months in a six- month period must be reported. TRCs are for two groups of pollutants.

Group I Pollutants—TRC=1.4
Group II Pollutants—TRC=1.2

b. Reporting Criteria for Chronic Violations of Monthly Average Limits

Chronic violations must be reported in the NNCR if the monthly average permit limits are exceeded any four months in a six-month period. These criteria apply to all Group I and Group II pollutants.

Group I Pollutants—TRC=1.4

Oxygen Demand

Biochemical Oxygen Demand
Chemical Oxygen Demand
Total Oxygen Demands
Total Organic Carbon
Other

Solids

Total Suspended Solids (Residues)
Total Dissolved Solids (Residues)
Other

Nutrients

Inorganic Phosphorus Compounds
Inorganic Nitrogen Compounds
Other

Detergents and Oils

MBAS
NTA
Oil and Grease
Other detergents or algicides

Minerals

Calcium
Chloride
Fluoride
Magnesium
Sodium
Potassium
Sulfur
Sulfate
Total Alkalinity
Total Hardness
Other Minerals

Metals

Aluminum
Cobalt
Iron
Vanadium

Group II Pollutants—TRC=1.2

*Metals* (all forms)
Other metals not specifically listed under Group I

Inorganic

Cyanide
Total Residual Chlorine

Organics

All organics are Group II except those specifically listed under Group I.

■ 23. Add part 127 to read as follows:

PART 127—NPDES ELECTRONIC REPORTING

**Subpart A—General**

Sec.
127.1 Purpose and scope.
127.2 Definitions.

**Subpart B—Electronic Reporting of NPDES Information From NPDES-Regulated Facilities**

127.11 Types of data to be reported electronically by NPDES permittees, facilities, and entities subject to this part [see § 127.1(a)].
127.12 Signature and certification standards for electronic reporting.
127.13 Requirements regarding quality assurance and quality control.
127.14 Requirements regarding timeliness, accuracy, completeness, and national consistency.
127.15 Waivers from electronic reporting.
127.16 Implementation of electronic reporting requirements for NPDES permittees, facilities, and entities subject to this part [see § 127.1(a)].

**Subpart C—Responsibilities of EPA and States, Tribes, and Territories Authorized to Implement the NPDES Program**

127.21 Data to be reported electronically to EPA by states, tribes, and territories.
127.22 Requirements regarding quality assurance and quality control.
127.23 Requirements regarding timeliness, accuracy, completeness, and national consistency.
127.24 Responsibilities regarding review of waiver requests from NPDES permittees, facilities, and entities subject to this part [see § 127.1(a)].
127.25 Time for states, tribes, and territories to revise existing programs.
127.26 Implementation plan (authorized states, tribes, and territories).
127.27 Procedure for determining initial recipient of electronic NPDES information.
Appendix A to Part 127—Minimum Set of NPDES Data

**Authority:** 33 U.S.C. 1251 *et seq.*

## Subpart A—General

### § 127.1 Purpose and scope.

(a) This part, in conjunction with the NPDES reporting requirements specified in 40 CFR parts 122, 123, 124, 125, 403, 501, and 503, specifies the requirements for:

(1) Electronic reporting of information by NPDES permittees;

(2) Facilities or entities seeking coverage under NPDES general permits;

(3) Facilities or entities submitting stormwater certifications or waivers from NPDES permit requirements;

(4) Industrial users located in municipalities without approved local pretreatment programs;

(5) Approved pretreatment programs;

(6) Facilities or entities regulated by the Federal sewage sludge/biosolids program; and

(7) EPA and the states, tribes, or territories that have received authorization from EPA to implement the NPDES program. This part, in conjunction with 40 CFR parts 123, 403, and 501, also specifies the requirements for electronic reporting of NPDES information to EPA by the states, tribes, or territories that have received authorization from EPA to implement the NPDES program.

(b) These regulations are not intended to preclude states, tribes, or territories authorization from EPA to implement the NPDES program from developing and using their own NPDES data systems. However, these states, tribes, and territories must ensure that the required minimum set of NPDES data (appendix A of this part) is electronically transferred to EPA in a timely, accurate, complete, and nationally-consistent manner fully compatible with EPA's national NPDES data system.

(c) Under 10 U.S.C. 130e, the Secretary of Defense may exempt Department of Defense ''critical infrastructure security information'' from disclosure under the Freedom of Information Act (FOIA). NPDES program data designated as critical infrastructure security information in response to a FOIA request will be withheld from the public. In the instance where an NPDES program data element for a particular facility is designated as critical infrastructure security information in response to a FOIA request, a separate filtered set of data without the redacted information will be shared with the public; however, all NPDES program data will continue to be provided to EPA and the authorized state, tribe, or territory NPDES program.

(d) Proper collection, management, and sharing of the data and information listed in appendix A ensures that there is timely, complete, accurate, and nationally-consistent set of data about the NPDES program.

### § 127.2 Definitions.

(a) The definitions in 40 CFR parts 122, 123, 124, 125, 403, 501 and 503 apply to all subparts of this part.

(b) *Initial recipient of electronic NPDES information from NPDES-regulated facilities (initial recipient)* means the entity (EPA or the state, tribe, or territory authorized by EPA to implement the NPDES program) that is the designated entity for receiving electronic NPDES data. Section 127.27 outlines the process for designating the initial recipient of electronic NPDES information from NPDES-regulated facilities. EPA must become the initial recipient of electronic NPDES information from NPDES-regulated facilities if the state, tribe, or territory does not collect the data required in appendix A to this part and does not consistently maintain timely, accurate, complete, and consistent data transfers in compliance with this part and 40 CFR part 3. Timely means that the authorized state, tribe, or territory submits these data transfers (see the data elements in appendix A to this part) to EPA within 40 days of when the authorized program completed the activity or received a report submitted by a regulated entity. For example, the data regarding a state inspection of an NPDES-regulated entity that is finalized by the state on October 5th must be electronically transferred to EPA no

later than November 14th of that same year (*e.g.,* 40 days after October 5th).

(c) *NPDES data group* means the group of related data elements identified in Table 1 in appendix A to this part. These NPDES data groups have similar regulatory reporting requirements and have similar data sources.

(d) *NPDES program* means the National Pollutant Discharge Elimination System (Clean Water Act section 402); the Federal Sewage Sludge (Biosolids) Program (Clean Water Act section 405); and the Federal Pretreatment Program (Clean Water Act section 307(b); 40 CFR part 403). EPA can implement the NPDES program or authorize states, tribes, and territories to implement the NPDES program (''authorized NPDES program''). Identifying the relevant authority must be done for each NPDES subprogram (*e.g.,* NPDES core program, federal facilities, general permits, pretreatment, and sewage sludge/biosolids).

(e) *Minimum set of NPDES data* means the data and information listed in appendix A to this part.

(f) *Program reports* means the information reported by NPDES-regulated entities and listed in Table 1 of appendix A to this part (except NPDES Data Groups 1, 2, and 3).

(g) *Hybrid approach* is a method that the initial recipient [as defined in paragraph (b) of this section] may elect to use for construction stormwater general permit reports [Notices of Intent to discharge (NOIs); Notices of Termination (NOTs); No Exposure Certifications (NOEs); Low Erosivity Waivers (LEWs)] [40 CFR 122.26(b)(15), 122.28 and 122.64] in order to demonstrate compliance with this part. This alternative compliance method allows the initial recipient (the authorized state, tribe, territory or EPA) to use a non-CROMERR electronic submission along with a uniquely matched paper submission, to reflect conditions at construction sites. Specifically, this approach allows the initial recipient to use data capture technologies to collect construction stormwater general permit reports. For example, under this approach the initial recipient may allow construction operators to complete an electronic construction stormwater general permit report, which simultaneously produces a paper copy of the report and electronically transmits a copy of the data from the report to the authorized NPDES program. Under this approach the construction operator must sign and date the paper copy of the construction stormwater general permit report with a ''wet-ink'' signature and this paper document will be the copy of record. Under this approach the initial recipient must have the ability to definitively and uniquely link the signed and dated paper document with the electronic submission from the facility or entity (*e.g.,* use of a unique code or mark on the signed and dated paper document that is also embedded in the electronic submission). Under this approach the initial recipient may also use automated data capture technologies (*e.g.,* Optical Character Recognition), which allow construction operators to submit their general permit reports to the initial recipient on paper with a ''wet-ink'' signature and date in a structured format that allows for easy data importation into the initial recipient's NPDES data system.

(h) *NPDES-regulated entity* means any entity regulated by the NPDES program.

## Subpart B—Electronic Reporting of NPDES Information From NPDES-Regulated Facilities

### § 127.11 Types of data to be reported electronically by NPDES permittees, facilities, and entities subject to this part [see § 127.1(a)].

(a) NPDES-regulated entities must electronically submit the minimum set of NPDES data for these NPDES reports (if such reporting requirements are applicable). The following NPDES reports are the source of the minimum set of NPDES data from NPDES-regulated entities:

(1) Discharge Monitoring Report [40 CFR 122.41(l)(4)];

(2) Sewage Sludge/Biosolids Annual Program Report [40 CFR part 503];

(3) Concentrated Animal Feeding Operation (CAFO) Annual Program Report [40 CFR 122.42(e)(4)];

(4) Municipal Separate Storm Sewer System (MS4) Program Report [40 CFR 122.34(g)(3) and 122.42(c)];

(5) Pretreatment Program Annual Report [40 CFR 403.12(i)];

(6) Sewer Overflow and Bypass Incident Event Report [40 CFR 122.41(l)(6) and (7)]; and

(7) CWA section 316(b) Annual Reports [40 CFR part 125, subpart J].

(b) Facilities or entities seeking coverage under or termination from NPDES general permits and facilities or entities submitting stormwater certifications or waivers from NPDES permit requirements [see Exhibit 1 to 40 CFR 122.26(b)(15) and (g)] must electronically submit the minimum set of NPDES data for the following notices, certifications, and waivers (if such reporting requirements are applicable):

(1) Notice of intent (NOI) to discharge by facilities seeking coverage under a general NPDES permit (rather than an individual NPDES permit), as described in 40 CFR 122.28(b)(2);

(2) Notice of termination (NOT), as described in 40 CFR 122.64;

(3) No exposure certification (NOE), as described in 40 CFR 122.26(g)(1)(iii); and

(4) Low erosivity waiver (LEW) and another waiver as described in Exhibit 1 to 40 CFR 122.26(b)(15).

(c) Industrial users located in municipalities without approved local pretreatment programs must electronically submit the minimum set of NPDES data for the following self-monitoring reports (if such reporting requirements are applicable):

(1) Periodic reports on continued compliance, as described in 40 CFR 403.12(e); and

(2) Reporting requirements for Industrial Users not subject to categorical Pretreatment Standards, as described in 40 CFR 403.12(h).

(d) The minimum set of NPDES data for NPDES-regulated facilities is identified in appendix A to this part.

### § 127.12 Signature and certification standards for electronic reporting.

The signatory and certification requirements identified in 40 CFR part 3 (including, in all cases, subpart D to part 3), § 122.22, and 40 CFR 403.12(l) must also apply to electronic submissions of NPDES information (see § 127.11) by NPDES permittees, facilities, and entities subject to this part [see § 127.1(a)].

### § 127.13 Requirements regarding quality assurance and quality control.

(a) Responsibility for the quality of the information provided electronically in compliance with this part by the NPDES permittees, facilities, and entities subject to this part [see § 127.1(a)] rests with the owners and operators of those facilities or entities. NPDES permittees, facilities, and entities subject to this part must use quality assurance and quality control procedures to ensure the quality of the NPDES information submitted in compliance with this part.

(b) NPDES permittees, facilities, and entities subject to this part must electronically submit their NPDES information in compliance with the data quality requirements specified in § 127.14. NPDES permittees, facilities, and entities subject to this part must electronically submit their NPDES information unless a waiver is granted in compliance with this part (see §§ 127.15 and 127.24).

**§ 127.14 Requirements regarding timeliness, accuracy, completeness, and national consistency.**

NPDES permittees, facilities, and entities subject to this part [see § 127.1(a)] must comply with all requirements in this part and electronically submit the minimum set of NPDES data in the following nationally-consistent manner:

(a) *Timely.* Electronic submissions of the minimum set of NPDES data to the appropriate initial recipient, as defined in § 127.2(b), must be timely.

(1) Measurement data (including information from discharge monitoring reports, self-monitoring data from industrial users located outside of approved local pretreatment programs, and similar self-monitoring data). The electronic submission of these data is due when that monitoring information is required to be reported in compliance with statutes, regulations, the NPDES permit, another control mechanism, or an enforcement order.

(2) *Program report data.* The electronic submission of this data is due when that program report data is required to be reported in compliance with statutes, regulations, the NPDES permit, another control mechanism, or an enforcement order.

(b) *Accurate.* Electronic submissions of the minimum set of NPDES data must be identical to the actual measurements taken by the owner, operator, or their duly authorized representative;

(c) *Complete.* Electronic submission of the minimum set of NPDES data must include all required data (see appendix A to this part) and these electronic submissions must be sent to the NPDES data system of the initial recipient, as defined in § 127.2(b); and

(d) *Consistent.* Electronic submissions of the minimum set of NPDES data must be compliant with EPA data standards as set forth in this part and in a form (including measurement units) and be fully compatible with EPA's national NPDES data system.

**§ 127.15 Waivers from electronic reporting.**

(a) NPDES permittees, facilities, and entities subject to this part [see § 127.1(a)] must electronically submit the minimum set of NPDES data in compliance with this part, 40 CFR part 3 (including, in all cases, subpart D to part 3), 40 CFR 122.22, and 40 CFR 403.12(l) unless a waiver is granted in compliance with this section and § 127.24.

(b) Temporary waivers from electronic reporting may be granted by the authorized NPDES program (EPA, or states, territories, and tribes that have received authorization to implement the NPDES program), in compliance with this section and § 127.24, to NPDES permittees, facilities, and entities subject to this part [see § 127.1(a)].

(1) Each temporary waiver must not extend beyond five years. However, NPDES-regulated entities may re-apply for a temporary waiver. It is the duty of the owner, operator, or duly authorized representative of the NPDES permittee, facility, and entity subject to this part [see §§ 122.22 of this chapter and 127.1(a)] to re-apply for a new temporary waiver. Authorized NPDES programs cannot grant a temporary waiver to an NPDES-regulated entity without first receiving a temporary waiver request from the NPDES-regulated entity.

(2) To apply for a temporary waiver, the owner, operator, or duly authorized representative of the NPDES permittee, facility, and entity subject to this part [see §§ 122.22 of this chapter and 127.1(a)] must submit the following information to their authorized NPDES program:

(i) Facility name;

(ii) NPDES permit number (if applicable);

(iii) Facility address;

(iv) Name, address and contact information for the owner, operator, or duly authorized facility representative;

(v) Brief written statement regarding the basis for claiming such a temporary waiver; and

(vi) Any other information required by the authorized NPDES program.

(3) The authorized NPDES program will determine whether to grant a temporary waiver. The authorized NPDES program must provide notice to the owner, operator, or duly authorized facility representative submitting a temporary waiver request, in compliance with the requirements of § 127.24.

(4) NPDES permittees, facilities, and entities subject to this part [see § 127.1(a)] that have received a temporary waiver must continue to provide the minimum set of NPDES data (as well as other required information in compliance with statutes, regulations, the NPDES permit, another control mechanism, or an enforcement order) in hard-copy format to the authorized NPDES program. The authorized NPDES program must electronically transfer these data to EPA in accordance with subpart C of this part.

(5) An approved temporary waiver is not transferrable.

(c) Permanent waivers from electronic reporting may be granted by the authorized NPDES program (EPA, or states, territories, and tribes that have received authorization to implement the NPDES program), in compliance accordance with this section and § 127.24, to NPDES permittees, facilities, and entities subject to this part [see § 127.1(a)].

(1) Permanent waivers are only available to facilities and entities owned or operated by members of religious communities that choose not to use certain modern technologies (*e.g.,* computers, electricity). Authorized NPDES programs cannot grant a permanent waiver to an NPDES-regulated entity without first receiving a permanent waiver request from the NPDES-regulated entity.

(2) To apply for a permanent waiver, the owner, operator, or duly authorized representative of the NPDES permittee, facility, and entity subject to this part [see §§ 122.22 of this chapter and 127.1(a)] must submit the information listed in § 127.15(b)(2) to their authorized NPDES program.

(3) An approved permanent waiver is not transferrable.

(4) NPDES permittees, facilities, and entities subject to this part [see § 127.1(a)] that have received a permanent waiver must continue to provide the minimum set of NPDES data (as well as other required information in compliance with statutes, regulations, the NPDES permit, another control mechanism, or an enforcement order) in hard-copy format to the authorized NPDES program. The authorized NPDES program must electronically transfer these data to EPA in accordance with subpart C of this part.

(d) Episodic waivers from electronic reporting may be granted by the authorized NPDES program (EPA, or states, territories, and tribes that have received authorization to implement the NPDES program) or the initial recipient, as defined in § 127.2(b), in compliance accordance with this section and § 127.24, to NPDES permittees, facilities, and entities subject to this part [see § 127.1(a)]. The following conditions apply to episodic waivers.

(1) No waiver request from the NPDES permittee, facility or entity is required to obtain an episodic waiver from electronic reporting.

(2) Episodic waivers are not transferrable.

(3) Episodic waivers cannot last more than 60 days.

(4) The authorized NPDES program or initial recipient will decide if the episodic waiver provision allows facilities and entities to delay their electronic submissions or to send hardcopy (paper) submissions. Episodic waivers are only available to facilities

and entities in the following circumstances:

(i) Large scale emergencies involving catastrophic circumstances beyond the control of the facilities, such as forces of nature (*e.g.,* hurricanes, floods, fires, earthquakes) or other national disasters. The authorized NPDES program will make the determination if an episodic waiver is warranted in this case and must receive the hardcopy (paper) submissions.

(ii) Prolonged electronic reporting system outages (*i.e.,* outages longer than 96 hours). The initial recipient, which may also be the authorized NPDES program, will make the determination if an episodic waiver is warranted in this case and must receive the hardcopy (paper) submissions.

**§ 127.16 Implementation of electronic reporting requirements for NPDES permittees, facilities, and entities subject to this part [see § 127.1(a)].**

(a) *Scope and schedule.* NPDES permittees, facilities, and entities subject to this part [see § 127.1(a)], with the exception of those covered by waivers under §§ 127.15 and 127.24, must electronically submit the following NPDES information (reports, notices, waivers, and certifications) after the start dates listed in Table 1 of this section. This part is not intended to undo existing requirements for electronic reporting. Prior to this date, and independent of this part, the permittee may be required to report electronically if specified by a particular permit or if required to do so by state law.

TABLE 1—START DATES FOR ELECTRONIC SUBMISSIONS OF NPDES INFORMATION

| NPDES information | Start dates for electronic submissions |
|---|---|
| General Permit Reports [Notices of Intent to discharge (NOIs); Notices of Termination (NOTs); No Exposure Certifications (NOEs); Low Erosivity Waivers (LEWs) and other Waivers] [40 CFR 122.26(b)(15), 122.28 and 122.64]. | December 21, 2020. |
| Discharge Monitoring Reports [40 CFR 122.41(l)(4)] | December 21, 2016. |
| Biosolids Annual Program Reports [40 CFR part 503] | December 21, 2016 (when the Regional Administrator is the Director).[1]<br>December 21, 2020 (when the state, tribe or territory is the authorized NPDES program).[1] |
| Concentrated Animal Feeding Operation (CAFO) Annual Program Reports [40 CFR 122.42(e)(4)]. | December 21, 2020. |
| Municipal Separate Storm Sewer System (MS4) Program Reports [40 CFR 122.34(g)(3) and 122.42(c)]. | December 21, 2020. |
| POTW Pretreatment Program Annual Reports [40 CFR 403.12(i)] | December 21, 2020. |
| Significant Industrial User Compliance Reports in Municipalities Without Approved Pretreatment Programs [40 CFR 403.12(e) and (h)]. | December 21, 2020. |
| Sewer Overflow Event Reports [40 CFR 122.41(l)(6) and (7)] | December 21, 2020. |
| CWA 316(b) Annual Reports [40 CFR part 125, subparts I, J, and N] | December 21, 2020. |

[1]Note: Director is defined in 40 CFR 122.2.

(b) *Electronic reporting standards.* NPDES permittees, facilities, and entities subject to this part [see § 127.1(a)] must electronically submit the information listed in Table 1 in § 127.16(a) in compliance with this part and 40 CFR part 3 (including, in all cases, subpart D to part 3), 40 CFR 122.22, and 40 CFR 403.12(l).

(c) *Initial recipient.* NPDES permittees, facilities, and entities subject to this part [see § 127.1(a)] must electronically submit the information listed in Table 1 in § 127.16(a) to the Director, Control Authority, Approval Authority, or initial recipient [as identified in § 127.27, and as defined in § 127.2(b)]. EPA must identify and publish the initial recipient on an EPA Web site and in the **Federal Register**, by state and by NPDES data group [see § 127.2(c)].

(d) *Standards for NPDES regulated entities with electronic reporting waivers.* NPDES permittees, facilities, and entities subject to this part [see § 127.1(a)] that have received a waiver from electronic reporting must continue to provide the minimum set of NPDES data (as well as other required information in compliance with statutes, regulations, the NPDES permit, another control mechanism, or an enforcement order) to the authorized NPDES program or initial recipient (see § 127.15).

## Subpart C—Responsibilities of EPA and States, Tribes, and Territories Authorized to Implement the NPDES Program

**§ 127.21 Data to be reported electronically to EPA by states, tribes, and territories.**

(a) States, tribes, and territories that have received authorization from EPA to implement the NPDES program must electronically transfer to EPA all information listed in appendix A to this part. This information includes:

(1) The ''Core NPDES Permitting, Compliance, And Enforcement Data [40 CFR parts 122, 123, 403, 503]'' as identified as NPDES Data Group 1 in Tables 1 and 2 in appendix A to this part.

(2) NPDES information (NPDES Data Groups 2 through 10 in Tables 1 and 2 in appendix A to this part) from NPDES permittees, facilities, and entities subject to this part [see § 127.1(a)] where the authorized state, tribe, or territory is the initial recipient [as identified in § 127.27, and as defined in § 127.2(b)]. This includes NPDES information from NPDES permittees, facilities, and entities subject to this part that received a waiver from electronic reporting (see § 127.15).

(3) Specific data elements that are required to be submitted electronically to EPA by the states, tribes, or territories that have received authorization from EPA to implement the NPDES program are identified in appendix A to this part.

(b) States, tribes, and territories that have received authorization from EPA to implement the NPDES program must electronically transfer these data, listed in § 127.21(a), to EPA within 40 days of the completed activity or within 40 days of the receipt of a report from an NPDES permittee, facility, or entity subject to this part [see § 127.1(a)].

**§ 127.22 Requirements regarding quality assurance and quality control.**

States, tribes, and territories that have received authorization from EPA to implement the NPDES program have the responsibility for the information that they electronically transfer to EPA. Therefore, authorized states, tribes, and territories that electronically transfer

data to EPA must use reasonable quality assurance and quality control procedures to ensure the quality of the NPDES information.

**§ 127.23 Requirements regarding timeliness, accuracy, completeness, and national consistency.**

(a) Authorized state, tribe, and territory NPDES programs must electronically transfer all NPDES program data that supports electronic reporting (*e.g.,* facility information and permit information such as limits, permitted features, and narrative conditions) to EPA three months prior to the electronic reporting start dates in Table 1 in § 127.16(a) and maintain updates thereafter. These electronic data transfers must be timely, accurate, complete, and consistent.

(b) According to the schedule set forth in § 127.16, the authorized NPDES program must electronically transfer to EPA the minimum set of NPDES data (as specified in appendix A to this part). These electronic data transfers to EPA must be timely, accurate, complete, and consistent.

(c) For the purposes of this part timely, accurate, complete, and consistent mean:

(1) Timely, in that the authorized state, tribe, or territory NPDES program electronically transfers the minimum set of NPDES data to EPA within 40 days of the completed activity or within 40 days of receipt of a report from an NPDES permittee, facility, or entity subject to this part [see § 127.1(a)]. For example, the data regarding a state inspection of an NPDES-regulated entity that is finalized by the state on October 5th must be electronically transferred to EPA no later than November 14th of that same year (*e.g.,* 40 days after October 5th). The start dates for electronic reporting from NPDES permittees, facilities, and entities subject to this part [see § 127.1(a)] are provided in Table 1 in § 127.16(a).

(2) Accurate, in that 95% or more of the minimum set of NPDES data in EPA's national NPDES data system are identical to the actual information on the copy of record (*e.g.,* permit, notice, waiver, certification, report, enforcement order, or other source document);

(3) Complete, in that 95% or more of submissions required for each NPDES data group [see § 127.2(c)] are available in EPA's national NPDES data system; and

(4) Consistent, in that data electronically submitted by states, tribes, and territories to EPA, by direct entry of information, data transfers from one data system to another, or some combination thereof, into EPA's designated national NPDES data system is in compliance with EPA's data standards as set forth in this part and in a form and measurement units which are fully compatible with EPA's national NPDES data system.

(d) An authorized program must consistently maintain the requirements identified in paragraph (a) of this section in order to be the initial recipient, as defined in § 127.2(b). If the authorized program does not maintain these requirements, EPA must become the initial recipient (see § 127.27).

**§ 127.24 Responsibilities regarding review of waiver requests from NPDES permittees, facilities, and entities subject to this part [see § 127.1(a)].**

(a) Under § 127.15, an NPDES permittee, facility, or entity subject to this part [see § 127.1(a)] may seek a waiver from electronic reporting. States, tribes, and territories that have received authorization from EPA to implement the NPDES program must review the temporary or permanent waiver requests that they receive and either approve or reject these requests within 120 days.

(b) The authorized NPDES state, tribe, or territory program must provide the permittee, facility, or entity with notice of the approval or rejection of their temporary or permanent waiver request from electronic reporting.

(c) The authorized NPDES state, tribal, or territory program must electronically transfer to EPA the minimum set of NPDES data (as specified in appendix A to this part) that they receive from permittees, facilities, or entities with a waiver from electronic reporting in accordance with § 127.23.

(d) Under § 127.15(d), episodic waivers from electronic reporting may be granted by the authorized NPDES program or the initial recipient to NPDES permittees, facilities, and entities. The authorized NPDES program or initial recipient granting an episodic waiver must provide notice, individually or through means of mass communication, regarding when such an episodic waiver is available, the facilities and entities that may use the episodic waiver, the likely duration of the episodic waiver, and any other directions regarding how facilities and entities should provide the minimum set of NPDES data (as well as other required information in compliance with statutes, regulations, the NPDES permit, another control mechanism, or an enforcement order) to the authorized NPDES program or the initial recipient. No waiver request from the NPDES permittee, facility or entity is required to obtain an episodic waiver from electronic reporting. The authorized NPDES program or initial recipient granting the episodic waiver will determine whether to allow facilities and entities to delay their electronic submissions for a short time (*i.e.,* no more than 40 days) or to send hardcopy (paper) submissions.

**§ 127.25 Time for states, tribes, and territories to revise existing programs.**

A state, tribe, or territory that has received authorization from EPA to implement the NPDES program must make program revisions in compliance with 40 CFR 123.62(e).

**§ 127.26 Implementation plan (authorized states, tribes, and territories).**

(a) *Initial recipient designation procedure.* EPA and authorized state, tribe, and territory NPDES programs must follow the procedure in § 127.27 for determining the initial recipient of electronic NPDES information from NPDES-regulated facilities (see § 127.2(b)).

(b) *NPDES data system requirements.* Authorized state, tribe, and territory NPDES programs must update their electronic data system to electronically collect the minimum set of NPDES data and facilitate compliance with this part (including §§ 127.22 and 127.23) and 40 CFR part 3. The authorized NPDES program's electronic data system must facilitate electronic reporting from NPDES permittees, facilities, and entities subject to this part [see § 127.1(a)] in compliance with the start dates in Table 1 in § 127.16(a). Authorized NPDES programs may elect to use EPA's national NPDES data system (and related Internet services and applications) for their electronic data system.

(c) *Preparatory actions for electronic reporting.* Authorized state, tribe, and territory NPDES programs must electronically transfer all NPDES data that supports electronic reporting (*e.g.,* permitting, compliance monitoring, compliance determinations, and enforcement activities) to EPA's national NPDES data system three months prior to the electronic reporting start dates in Table 1 in § 127.16(a) and maintain updates thereafter. These electronic data transfers must be timely, accurate, complete, and consistent (see § 127.23).

(d) *Transfer of NPDES program data to EPA.* A state, tribe, or territory that is designated by EPA as the initial recipient [see §§ 127.2(b) and 127.27] for an NPDES data group [as defined in § 127.2(c)] must electronically collect and maintain the minimum set of

NPDES data (as specified in appendix A to this part) and electronically transfer these data to EPA's national NPDES data system through timely, accurate, complete, and consistent electronic data transfers in compliance with this part (including §§ 127.22 and 127.23) and 40 CFR part 3.

(e) *Updating state statutes and regulations.* Authorized state, tribe, or territory NPDES programs must update their NPDES programs to implement this part. See 40 CFR 123.62(e).

(f) *Inclusion of electronic reporting requirements in NPDES permits.* All permits issued by the EPA and the authorized states, tribes, or territory NPDES program must contain permit conditions requiring compliance with the electronic reporting requirements in this part, 40 CFR part 3, and 40 CFR 122.22. NPDES-regulated facilities which already have electronic reporting requirements in their permits that meet the requirements in this part, 40 CFR part 3, and 40 CFR 122.22 must continue their electronic reporting to the initial recipient [see §§ 127.2(b) and 127.27].

(g) *Hybrid approach.* Authorized state, tribe, or territory NPDES programs may elect to use the Hybrid Approach [as defined in § 127.2(g)] for the collection of the minimum set of NPDES data contained in construction stormwater general permit reports [see Table 1 in § 127.16(a)].

(h) *Authorized NPDES program implementation plans.* A state, tribe, or territory that is designated by EPA as the initial recipient [see §§ 127.2(b) and 127.27] for an NPDES data group [as defined in § 127.2(c)] must submit an implementation plan to EPA for review. EPA will inform the authorized NPDES program if the implementation plan is adequate. This plan must provide enough details (*e.g.,* tasks, milestones, roles and responsibilities, necessary resources) to clearly describe how the program will successfully implement this part (including a description of their electronic reporting waiver approval process); however, this plan does not include electronic reporting of Discharge Monitoring Reports or Forms Provided or Specified by the Director (DMRs) [40 CFR 122.41(l)(4)]. These implementation plans must be submitted to EPA by December 21, 2016 for EPA review.

(i) *Updating waiver approval process.* A state, tribe, or territory that is designated by EPA as the initial recipient [see §§ 127.2(b) and 127.27] for an NPDES data group [as defined in § 127.2(c)] must submit an updated waiver approval process to EPA every five years. EPA will inform the authorized NPDES program if the waiver approval process adequate.

(j) *Electronic participation rates assessment.* EPA will assess the electronic reporting participation rate of NPDES permittees, facilities, and entities subject to this part [see § 127.1(a)] for each authorized NPDES program and by each NPDES data group to determine the appropriateness of using use its authority to increase the electronic reporting percentage rate.

(1) EPA will separately calculate the electronic reporting participation rate for each authorized NPDES program and for each NPDES data group six months after the deadline for conversion from paper to electronic submissions [see the start dates for electronic reporting in Table 1 in § 127.16(a)]. EPA will assess the electronic reporting participation rate for individually permitted facilities separate from the electronic reporting participation rate for general permit covered facilities for Discharge Monitoring Reports [NPDES Data Group Number 3].

(2) As appropriate, EPA will contact the facilities and entities that are not electronically reporting their reports, notices, waivers, and certifications after the start dates for electronic reporting [see Table 1 in § 127.16(a)]. EPA will not contact facilities and entities with waivers from electronic reporting (see § 127.15). EPA will direct these facilities and entities to use the electronic reporting system of the initial recipient [as identified in § 127.27, and as defined in § 127.2(b)].

(3) EPA will annually repeat its review of the electronic reporting participation rate for each authorized NPDES program and for each NPDES group as appropriate and contact facilities and entities as appropriate to use the electronic reporting system of the initial recipient [as identified in § 127.27, and as defined in § 127.2(b)].

**§ 127.27 Procedure for determining initial recipient of electronic NPDES information.**

(a) An authorized NPDES program must notify EPA by April 19, 2016 if it wishes EPA to be the initial recipient for a particular NPDES data group.

(b) A state, tribe, or territory that seeks authorization to implement an NPDES program after March 21, 2016 must describe if it is requesting to be the initial recipient of electronic NPDES information from NPDES-regulated facilities for specific NPDES data groups. See 40 CFR 123.22(g) and appendix A to this part.

(c) By July 18, 2016, EPA must publish on its Web site and in the **Federal Register** a listing of the initial recipients for electronic NPDES information from NPDES-regulated facilities by state, tribe, and territory and by NPDES data group. This listing must identify for NPDES-regulated facilities the initial recipient of their NPDES electronic data submissions and the due date for these NPDES electronic data submissions. EPA must update this listing on its Web site and in the **Federal Register** if a state, tribe, or territory gains authorization status to implement an NPDES program and is also approved by EPA to be the initial recipient of NPDES electronic data submissions for that program.

(d) Failure to maintain all the requirements in this part and 40 CFR part 3 must prohibit the state, territory, or tribe from being the initial recipient of electronic NPDES information from NPDES-regulated entities. The following is the process for these determinations:

(1) EPA must make a preliminary determination identifying if an authorized state, tribe, or territory is not complying with the requirements in this part and 40 CFR part 3 to be an initial recipient of electronic NPDES information from NPDES-regulated facilities. EPA must provide to the Director of the authorized NPDES program the rationale for any such preliminary determination and options for correcting these deficiencies. Within 60 days of EPA's preliminary determination, the authorized state, tribe, or territory must fully correct all deficiencies identified by EPA and notify EPA that such corrections have been completed. No response from the Director of the authorized NPDES program must indicate that the state, territory, or tribe agrees to be removed as the initial recipient for that NPDES data group of electronic NPDES information. Within 90 days of the EPA's preliminary determination, EPA must provide to the Director of the authorized NPDES program a final determination whether the state, tribe, or territory is not complying with the requirements in this part and 40 CFR part 3 to be an initial recipient of electronic NPDES information from NPDES-regulated facilities.

(2) EPA must become the initial recipient of electronic NPDES information from NPDES-regulated facilities if the state, tribe, or territory does not consistently maintain electronic data transfers in compliance with this part and 40 CFR part 3.

(3) EPA must update the initial recipient listing described in paragraph (c) of this section and publish this listing on its Web site and in the **Federal Register** when it provides a final determination described in paragraph (d)(1) of this section to the

Director of the authorized NPDES program.

(4) Following any determination of noncompliance made in compliance with paragraph (d)(1) of this section, EPA will work with the Director of the authorized NPDES program to remediate all issues identified by EPA that prevent the authorized NPDES program from being the initial recipient. When the issues identified by EPA are satisfactorily resolved, EPA must update the initial recipient listing in paragraph (c) of this section in order to list the authorized state, tribe, or territory as the initial recipient for the one or more NPDES data groups. EPA will publish this revised initial recipient listing on its Web site and in the **Federal Register**.

(e) An authorized NPDES program can initially elect for EPA to be the initial recipient for one or all of the NPDES data groups and then at a later date seek EPA approval to change the initial recipient status for one or all of the NPDES data groups from EPA to the authorized state, tribe, or territory. To make this switch, the authorized state, tribe, or territory will send a request to EPA. This request must identify the specific NPDES data groups for which the state, tribe, or territory would like to be the initial recipient of electronic NPDES information, a description of how its data system will be compliant with this part and 40 CFR part 3, and the date or dates when the state, tribe, or territory will be ready to start receiving this information. After EPA approval of the request, EPA will update the initial recipient list and will publish the revised initial recipient listing on its Web site and in the **Federal Register**.

(f) An authorized NPDES program can initially elect to be the initial recipient for one or all of the NPDES data groups and then at a later date request that EPA become the initial recipient for one or all of the NPDES data groups. To make this switch, the authorized state, tribe, or territory will send a request to EPA. After coordination with the state EPA will update the initial recipient list and will publish the revised initial recipient listing on its Web site and in the **Federal Register**.

## Appendix A to Part 127—Minimum Set of NPDES Data

The following two tables identify the minimum set of NPDES data that authorized states, tribes, territories must enter or transfer to EPA's national NPDES data system as well as what NPDES-regulated entities must electronically report to the designated initial recipient (authorized NPDES program or EPA) [see 40 CFR 127.2(b)]. Authorized NPDES programs will be the data provider in the event the regulated entity is covered by a waiver from electronic reporting. Use of these two tables ensures that there is consistent and complete reporting nationwide, and expeditious collection and processing of the data, thereby making it more accurate and timely. Taken together, these data standardizations and the corresponding electronic reporting requirements in 40 CFR parts 3, 122, 123, 124, 125, 127, 403, and 503 are designed to save the NPDES authorized programs considerable resources, make reporting easier for NPDES-regulated entities, streamline permit renewals (as permit writers typically review previous noncompliance events during permit renewal), ensure full exchange of NPDES program data between states and EPA to the public, improve environmental decision-making, and protect human health and the environment.

Authorized NPDES programs may also require NPDES regulated entities to submit more data than what is listed in this appendix. The authorized NPDES program can require NPDES regulated entities to submit these ''non-appendix A'' data on paper, electronically, or attachments to electronic notices and reports filed in compliance with this part.

Instructions: Table 1 of this appendix provides the list of data sources and minimum submission frequencies for the ten different NPDES Data Groups. Table 2 of this appendix provides the data that must be electronically reported for each of these NPDES Data Groups. The use of each data element is determined by identifying the number(s) in the column labeled ''NPDES Data Group Number'' in Table 2 and finding the corresponding ''NPDES Data Group Number'' in Table 1. For example, a value of ''1'' in Table 2 means that this data element is required in the electronic transmission of data from the NPDES program to EPA (Core NPDES Permitting, Compliance, and Enforcement Data). Likewise, a value of ''1 through 10'' in Table 2 means that this data element is required in all ten NPDES data groups. NPDES regulated entities that have no historical record (*e.g.,* ''greenfield'' facilities) do not need to provide data elements that rely on historical data elements. For the purposes of this appendix, the term 'sewage sludge' [see 40 CFR 503.9(w)] also refers to the material that is commonly referred to as 'biosolids.' EPA does not have a regulatory definition for biosolids but this material is commonly referred to as sewage sludge that is placed on, or applied to the land to use the beneficial properties of the material as a soil amendment, conditioner, or fertilizer. EPA's use of the term 'biosolids' in this appendix is to confirm that information about beneficially used sewage sludge (a.k.a. biosolids) is part of the data collected in this appendix.

TABLE 1—DATA SOURCES AND REGULATORY CITATIONS [1]

| NPDES Data group No.[2] | NPDES data group | Program area | Data provider | Minimum frequency [3] |
|---|---|---|---|---|
| 1 | Core NPDES Permitting, Compliance, and Enforcement Data [40 CFR parts 122, 123, 403, 503]. | All NPDES Program Sectors. | Authorized NPDES Program | Within 40 days of the completed activity or within 40 days of receipt of a report from a regulated entity [see § 127.23(a)(1)]. However, the frequency associated with any particular permittee may be considerably less [*e.g.,* once every five years for most permit information]. |
| 2 | General Permit Reports [Notices of Intent to discharge (NOIs); Notices of Termination (NOTs); No Exposure Certifications (NOEs); Low Erosivity Waivers and Other Waivers from Stormwater Controls (LEWs)] [40 CFR 122.26(b)(15), 122.28 and 124.5]. | All NPDES Program Sectors. | NPDES Permittee | Prior to obtaining coverage under a general permit or consideration for permit exclusion or waiver from permitting, and permit coverage termination. General permits are generally issued once every five years. |

TABLE 1—DATA SOURCES AND REGULATORY CITATIONS [1]—Continued

| NPDES Data group No.[2] | NPDES data group | Program area | Data provider | Minimum frequency [3] |
|---|---|---|---|---|
| 3 | Discharge Monitoring Reports [40 CFR 122.41(l)(4)]. | Most NPDES Program Sectors. | NPDES Permittee | At least annual, more frequent submissions may be required by the permit. |
| 4 | Sewage Sludge/Biosolids Annual Program Reports [40 CFR part 503]. | Sewage Sludge/ Biosolids. | NPDES Regulated Sewage Sludge/ Biosolids Generator and Handler. | Annual. |
| 5 | Concentrated Animal Feeding Operation (CAFO) Annual Program Reports [40 CFR 122.42(e)(4)]. | CAFO | CAFO | Annual. |
| 6 | Municipal Separate Storm Sewer System (MS4) Program Reports [40 CFR 122.34(g)(3) and 122.42(c)]. | MS4 | NPDES Permittee | Year two and year four of permit coverage (Small MS4), Annual (Medium and Large MS4). |
| 7 | Pretreatment Program Reports [40 CFR 403.12(i)]. | Pretreatment | POTW Pretreatment Control Authority, Approval Authority for SIUs in Municipalities Without Approved Pretreatment Programs. | Annual. |
| 8 | Significant Industrial User Compliance Reports in Municipalities Without Approved Pretreatment Programs [40 CFR 403.12(e) and (h)]. | Pretreatment | Significant Industrial User | Bi-Annual. |
| 9 | Sewer Overflow Event Reports [40 CFR 122.41(l)(6) and (7)]. | Sewer Overflows | NPDES Permittee | Within 5 days of the time the permittee becomes aware of the sewer overflow event (health or environment endangerment), Monitoring report frequency specific in permit (all other sewer overflow events). |
| 10 | CWA section 316(b) Annual Reports [40 CFR part 125, subpart J]. | CWA section 316(b). | NPDES Permittee | Annual. |

[1] Entities regulated by a NPDES permit will comply with all reporting requirements in their respective NPDES permit.

[2] Use the "NPDES Data Group Number" in this table and the "NPDES Data Group Number" column in Table 2 of this appendix to identify the source of the required data entry. EPA notes that electronic systems may use additional data to facilitate electronic reporting as well as management and reporting of electronic data. For example, NPDES permittees may be required to enter their NPDES permit number ("NPDES ID"—NPDES Data Group 1 and 2) into the applicable electronic reporting system in order to identify their permit and submit a Discharge Monitoring Report (DMR—NPDES Data Group 3). Additionally, NPDES regulated entities may be required to enter and submit data to update or correct erroneous data. For example, NPDES permittees may be required to enter new data regarding the Facility Individual First Name and Last Name (NPDES Data Group 1 and 2) with their DMR submission when there is a facility personnel change.

[3] The applicable reporting frequency is specified in the NPDES permit or control mechanism, which may be more frequent than the minimum frequency specified in this table.

TABLE 2—REQUIRED NPDES PROGRAM DATA

| Data name | Data description | CWA, regulatory (40 CFR), or other citation | NPDES data group No. (*see* Table 1) |
|---|---|---|---|
| **Basic Facility Information** | | | |
| [**Note:** As indicated in the "CWA, Regulatory, or Other Citation" column, some of these data elements apply to Significant Industrial Users (SIUs) and Categorical Industrial Users (CIUs) that discharge (including non-domestic wastewater delivered by truck, rail, and dedicated pipe or other means of transportation) to one or more POTWs and to regulated entities or locations that generate, process, or receive biosolids or sewage sludge.] | | | |
| Facility Type of Ownership | The unique code/description identifying the type of facility (*e.g.,* state government, municipal or water district, Federal facility, tribal facility). This data element is used by EPA's national NPDES data system to identify the facility type (*e.g.,* POTW, Non-POTW, and Federal). | 122.21, 122.21(j)(6), 122.21(q), 122.28(b)(2)(ii), 403.8(f), 403.10, 403.12(i), 503.18, 503.28, 503.48. | 1, 2, 4, and 7. |
| Facility Site Name | The name of the facility | 122.21, 122.21(j)(6), 122.21(q), 122.28(b)(2)(ii), 122.44(j), 403.8(f), 403.10, 403.12(i), 503.18, 503.28, 503.48. | 1, 2, 4, and 7. |

TABLE 2—REQUIRED NPDES PROGRAM DATA—Continued

| Data name | Data description | CWA, regulatory (40 CFR), or other citation | NPDES data group No. (*see* Table 1) |
|---|---|---|---|
| Facility Site Address | The address of the physical facility location | 122.21, 122.21(j)(6), 122.21(q), 122.28(b)(2)(ii), 122.44(j), 403.8(f), 403.10, 403.12(i), 503.18, 503.28, 503.48. | 1, 2, 4, and 7. |
| Facility Site City | The name of the city, town, village, or other locality, when identifiable, within which the boundaries (the majority of) the facility site is located. This is not always the same as the city used for USPS mail delivery. | 122.21, 122.21(j)(6), 122.21(q), 122.28(b)(2)(ii), 122.44(j), 403.8(f), 403.10, 403.12(i), 503.18, 503.28, 503.48. | 1, 2, 4, and 7. |
| Facility Site State | The U.S. Postal Service (USPS) abbreviation for the state or state equivalent for the U.S. where the facility is located. | 122.21, 122.21(j)(6), 122.21(q), 122.28(b)(2)(ii), 122.44(j), 403.8(f), 403.10, 403.12(i), 503.18, 503.28, 503.48. | 1, 2, 4, and 7. |
| Facility Site Zip Code | The combination of the 5-digit Zone Improvement Plan (ZIP) code and the 4-digit extension code (if available) where the facility is located. This zip code match the ''Facility Site City'' or the city used for USPS mail delivery. | 122.21, 122.21(j)(6), 122.21(q), 122.28(b)(2)(ii), 122.44(j), 403.8(f), 403.10, 403.12(i), 503.18, 503.28, 503.48. | 1, 2, 4, and 7. |
| Facility Site Tribal Land Indicator. | The EPA Tribal Internal Identifier for every unit of land trust allotment (''tribal land'') within Indian Country (*i.e.,* Federally recognized American Indian and Alaska Native tribal entities). This unique identifier will identify whether the facility is on tribal land and the current name of the American Indian tribe or Alaskan Native entity. This unique identifier is different from the Bureau of Indian Affairs tribal code and does not change when a Tribe changes its name. | 122.21, 122.21(q), 122.28(b)(2)(ii), 503.18, 503.28, 503.48. | 1, 2, and 4. |
| Facility Site Longitude | The measure of the angular distance on a meridian east or west of the prime meridian for the facility. The format for this data element is decimal degrees (*e.g.,* −77.029289) and the WGS84 standard coordinate system. This data element will also be used to describe the two-dimensional area (polygon) regulated by a municipal storm sewer system (MS4) NPDES permit through use of multiple latitude and longitude coordinates. For MS4 the polygon data should provide a reasonable estimate of the MS4 boundaries. This data element can also be system generated when the Facility Site Address, Facility Site City, and Facility Site State data elements can be used to generate accurate longitude and latitude values. (Note: ''Post Office Box'' addresses and ''Rural Route'' addresses are generally not geocodable). | 122.21, 122.21(q), 122.28(b)(2)(ii), 503.18, 503.28, 503.48. | 1, 2, and 4. |
| Facility Site Latitude | The measure of the angular distance on a meridian north or south of the equator for the facility. The format for this data element is decimal degrees (*e.g.,* 38.893829) and the WGS84 standard coordinate system. This data element will also be used to describe the two-dimensional area (polygon) regulated by a municipal storm sewer system (MS4) NPDES permit through use of multiple latitude and longitude coordinates. This data element can also be system generated when the Facility Site Address, Facility Site City, and Facility Site State data elements can be used to generate accurate longitude and latitude values. (Note: ''Post Office Box'' addresses and ''Rural Route'' addresses are generally not geocodable). | 122.21, 122.21(q), 122.28(b)(2)(ii), 503.18, 503.28, 503.48. | 1, 2, and 4. |
| Facility Contact Affiliation Type | The affiliation of the contact with the facility (*e.g.,* ''Owner,'' ''Operator,'' or ''Main Contact''). This is a unique code/description that identifies the nature of the individual's affiliation to the facility. | 122.21, 122.21(j)(6), 122.21(q), 122.28(b)(2)(ii), 403.8(f), 403.10, 403.12(i), 503.18, 503.28, 503.48. | 1, 2, 4, and 7. |

TABLE 2—REQUIRED NPDES PROGRAM DATA—Continued

| Data name | Data description | CWA, regulatory (40 CFR), or other citation | NPDES data group No. (*see* Table 1) |
|---|---|---|---|
| Facility Contact First Name | The given name of an individual affiliated with this facility. | 122.21, 122.21(j)(6), 122.21(q), 122.28(b)(2)(ii), 403.8(f), 403.10, 403.12(i), 503.18, 503.28, 503.48. | 1, 2, 4, and 7. |
| Facility Contact Last Name | The surname of an individual affiliated with this facility. | 122.21, 122.21(j)(6), 122.21(q), 122.28(b)(2)(ii), 403.8(f), 403.10, 403.12(i), 503.18, 503.28, 503.48. | 1, 2, 4, and 7. |
| Facility Contact Title | The title held by an individual in an organization affiliated with this facility. | 122.21, 122.21(j)(6), 122.21(q), 122.28(b)(2)(ii), 403.8(f), 403.10, 403.12(i), 503.18, 503.28, 503.48. | 1, 2, 4, and 7. |
| Facility Contact EMail Address | The business email address of the designated individual affiliated with this facility. | 122.21, 122.21(j)(6), 122.21(q), 122.28(b)(2)(ii), 403.8(f), 403.10, 403.12(i), 503.18, 503.28, 503.48. | 1, 2, 4, and 7. |
| Facility Organization Formal Name. | The legal name of the person, firm, public organization, or other entity that operates the facility. This name may or may not be the same name as the facility. The operator of the facility is the legal entity that controls the facility's operation rather than the facility or site manager. This data element should not use a colloquial name. This field is optional for MS4 permittees. | 122.21, 122.21(j)(6), 122.21(q), 122.28(b)(2)(ii), 403.8(f), 403.10, 403.12(i), 503.18, 503.28, 503.48. | 1, 2, 4, and 7. |
| **Basic Permit Information** | | | |
| [**Note:** As indicated in the "CWA, Regulatory, or Other Citation" column, some of these data elements also apply to Significant Industrial Users (SIUs) and Categorical Industrial Users (CIUs) that discharge (including non-domestic wastewater delivered by truck, rail, and dedicated pipe or other means of transportation) to one or more POTWs and to regulated entities or locations that generate, process, or receive biosolids or sewage sludge.] | | | |
| NPDES ID | This is the unique identifier for the NPDES permit or control mechanism for NPDES regulated entities or Unpermitted ID for an unpermitted facility. This data elements is used for compliance monitoring activities, violation determinations, and enforcement actions. This data element also applies to Significant Industrial Users (SIUs) and Categorical Industrial Users (CIUs) that discharge (including non-domestic wastewater delivered by truck, rail, and dedicated pipe or other means of transportation) to one or more POTWs in states where the POTW is the Control Authority. | 122.2, 122.21, 122.21(j)(6), 122.21(q), 122.28(b)(2)(ii), 122.34(g)(3), 122.41(l)(4)(i), 122.41(l)(6) and (7), 122.41(m)(3), 122.42(c), 122.42(e)(4), 123.26, 123.41(a), 125.96, 125.97(g), 125.98, 125.138(b), 401.14, 403.10, 403.12(e), 403.12(h), 403.12(i), 503.18, 503.28, 503.48. | 1, 2, 3, 4, 5, 6, 7, 8, 9, 10. |
| Master General Permit Number | The unique identifier of the master general permit, which is linked to a General Permit Covered Facility. This data element only applies to facilities regulated by a master general permit. | 122.2, 122.21, 122.21(j)(6), 122.21(q), 122.28(b)(2)(ii), 122.34(g)(3), 122.41(l)(4)(i), 122.41(l)(6) and (7), 122.41(m)(3), 122.42(c), 122.42(e)(4), 123.26, 123.41(a), 403.10, 403.12(e), 403.12(h), 403.12(i), 503.18, 503.28, 503.48. | 1, 2. |
| Permit Type | The unique code/description identifying the type of permit [*e.g.,* NPDES Individual Permit, NPDES Master General Permit, General Permit Covered Facility, State Issued Non-NPDES General Permit, Individual IU Permit (Non-NPDES), Individual State Issued Permit (Non-NPDES)]. | 122.2, 122.21, 122.21(j)(6), 122.21(q), 122.28(b)(2)(ii), 403.10. | 1, 2. |
| Permit Component | This will identify one or more applicable NPDES subprograms (*e.g.,* pretreatment, CAFO, CSO, POTW, biosolids/sewage sludge, stormwater) for the permit record. This field is only required when the permit includes one or more NPDES subprograms. | 122.2, 122.21, 122.21(j)(6), 122.21(q), 122.28(b)(2)(ii), 403.10. | 1, 2. |

TABLE 2—REQUIRED NPDES PROGRAM DATA—Continued

| Data name | Data description | CWA, regulatory (40 CFR), or other citation | NPDES data group No. (*see* Table 1) |
|---|---|---|---|
| Permit Issue Date | This is the date the permit was issued. The date must be provided in YYYY–MM–DD format where YYYY is the year, MM is the month, and DD is the day. | 122.46 | 1. |
| Permit Effective Date | This is the date on which the permit is effective. The date must be provided in YYYY–MM–DD format where YYYY is the year, MM is the month, and DD is the day. | 122.46, 122.21, 122.21(j)(6), 122.21(q), 403.10. | 1. |
| Permit Modification/Amendment Date. | This is the date on which the permit was modified or amended. The date must be provided in YYYY–MM–DD format where YYYY is the year, MM is the month, and DD is the day. | 122.62, 122.63, 403.10 | 1. |
| Permit Expiration Date | This is the date the permit will expire. The date must be provided in YYYY–MM–DD format where YYYY is the year, MM is the month, and DD is the day. | 122.46, 122.21, 122.21(j)(6), 122.21(q), 403.10. | 1. |
| Permit Termination Date | This is the date the permit was terminated. The date must be provided in YYYY–MM–DD format where YYYY is the year, MM is the month, and DD is the day. | 122.64, 403.10 | 1. |
| Permit Major/Minor Status Indicator. | This code/description identifies the permit status as ''Major'' or ''Nonmajor'' (a.k.a. ''Minor''). This data element is initially system generated and defaults to ''Minor''. The most recent permit status is copied when the permit is reissued. | 122.2 | 1. |
| Permit Major/Minor Status Start Date. | The date that the permit became its current Major/Minor status. Initially system-generated to match effective date. The date must be provided in YYYY–MM–DD format where YYYY is the year, MM is the month, and DD is the day. | 122.2 | 1. |
| Permit Application Total Design Flow. | This is the design flow rate that a permitted facility was designed to accommodate, in millions of gallons per day (MGD). This is only required for wastewater treatment plants. | 122.21, 122.28(b)(2)(ii), 403.10(f). | 1, 2. |
| Permit Application Total Actual Average Flow. | This is the annual average daily flow rate that a permitted facility will likely accommodate at the start of its permit term, in MGD. This is only required for wastewater treatment plants. | 122.21,122.28(b)(2)(ii), 122.41, 403.10(f). | 1, 2. |
| Complete Permit Application/NOI Received Date. | This is the date on which the complete application for an individual NPDES permit was received or a complete Notice of Intent (NOI) for coverage under a master general permit was received. The date must be provided in YYYY–MM–DD format where YYYY is the year, MM is the month, and DD is the day. This data element can be system generated when the complete NOI is electronically received by the NPDES program. | 122.21, 122.28(b)(2)(ii), 403.10(f). | 1. |
| Permit Application/NOI Received Date. | This is the date on which the application for an individual NPDES permit was received or a Notice of Intent (NOI) for coverage under a master general permit was received. The date must be provided in YYYY–MM–DD format where YYYY is the year, MM is the month, and DD is the day. This data element can be system generated when the NPDES permit application or NOI is electronically received by the NPDES program. | 122.21, 122.28(b)(2)(ii), 403.10(f). | 1. |
| Permit Status | This is a unique code/description that identifies the permit status (*e.g.,* Effective, Expired, Administratively Continued, Pending, Not Needed, Retired, Denied, and Terminated). This is system generated for all statuses except ''Not Needed,'' which must be user entered. | 122.21, 122.21(j)(6), 122.21(q), 122.64, 122.46, 403.10(f). | 1. |
| Master General Permit Industrial Category. | These are the one or more unique codes/descriptions that identify the one or more industrial categories covered by the master general permit. This field is required for master general permits only. | 122.21, 122.21(j)(6), 122.21(q), 122.28(b)(2)(ii), 403.10(f). | 1. |

TABLE 2—REQUIRED NPDES PROGRAM DATA—Continued

| Data name | Data description | CWA, regulatory (40 CFR), or other citation | NPDES data group No. (*see* Table 1) |
|---|---|---|---|
| Permit Issuing Organization Type. | This is the type of organization issuing a permit (*e.g.,* County, Federal, Local, Municipal, Regional, State, Tribal). | 122.21, 122.21(j)(6), 122.21(q), 123.41, 403.10(f). | 1. |
| DMR Non-Receipt | Turns non-receipt tracking for compliance monitoring submissions [*e.g.,* discharge monitoring reports (DMRs)] ''on'' or ''off'' for non-major permits (a.k.a. ''minors''). This field is always ''on'' for major permits. This data element is initially system generated (defaults to ''on'') and the most recent value is copied when the permit is reissued. . This data element will also be used to track non-receipt tracking of periodic compliance monitoring data [40 CFR 403.12(e) and (h)] for Significant Industrial Users (SIUs) and Categorical Industrial Users (CIUs) that discharge (including non-domestic wastewater delivered by truck, rail, and dedicated pipe or other means of transportation) to one or more POTWs in states where EPA or the State is the Control Authority). | 123.45, 403.10(f) | 1. |
| DMR Non-Receipt Start Date | This is the date on which the permit's ''on'' or ''off'' period for DMR Non-Receipt tracking status began. Initially system-generated to match effective date. The date must be provided in YYYY–MM–DD format where YYYY is the year, MM is the month, and DD is the day. This data element will also be used to track non-receipt tracking of periodic compliance monitoring data [40 CFR 403.12(e) and (h)] for Significant Industrial Users (SIUs) and Categorical Industrial Users (CIUs) that discharge (including non-domestic wastewater delivered by truck, rail, and dedicated pipe or other means of transportation) to one or more POTWs in states where EPA or the State is the Control Authority). | 123.45, 403.10(f) | 1. |
| Reportable Noncompliance Tracking. | Turns reportable noncompliance (RNC) tracking ''on'' or ''off'' for non-major permits (a.k.a. ''minors''). This data element is initially system generated (defaults to ''on'') and the most recent value is copied when the permit is reissued. | 123.45, 403.10(f) | 1. |
| Reportable Noncompliance Tracking Start Date. | This is the date on which the permit's ''on'' or ''off'' period for Reportable Noncompliance Tracking status began. Initially system-generated to match effective date. The date must be provided in YYYY–MM–DD format where YYYY is the year, MM is the month, and DD is the day. | 123.45, 403.10(f) | 1. |
| Applicable Effluent Limitations Guidelines. | The applicable effluent limitations guidelines and new source performance standards in the NPDES permit (*e.g.,* part 414—Organic chemicals, plastics, and synthetic fibers point source category). This data element also applies to SIUs and CIUs that discharge (including non-domestic wastewater delivered by truck, rail, and dedicated pipe or other means of transportation) to one or more POTWs in states where the POTW is the Control Authority. | 122.21, 122.21(j)(6), 122.21(q), 122.44, 403.10(f). | 1. |
| Permit Compliance Tracking Status. | This is a unique code/description that indicates whether the permit is currently ''on'' or ''off'' for compliance tracking purposes. This data element is initially system generated (defaults to ''on'') and the most recent value is copied when the permit is reissued. | 122.21, 122.21(j)(6), 122.21(q), 123.45, 403.10(f). | 1. |
| Permit Compliance Tracking Status Start Date. | This is the date on which the permit's ''on'' or ''off'' period for compliance tracking status began. Initially system-generated to match effective date. The date must be provided in YYYY–MM–DD format where YYYY is the year, MM is the month, and DD is the day. | 122.21, 122.21(j)(6), 122.21(q), 123.45, 403.10(f). | 1. |

TABLE 2—REQUIRED NPDES PROGRAM DATA—Continued

| Data name | Data description | CWA, regulatory (40 CFR), or other citation | NPDES data group No. (*see* Table 1) |
|---|---|---|---|
| RNC Status (Manual) | The status of reportable noncompliance (RNC) as it was entered by the regulatory authority for the official Quarterly Noncompliance Report (QNCR) or NPDES Noncompliance Report (NNCR). This data element can also be revised by the regulatory authority. | 122.21, 122.21(j)(6), 122.21(q), 123.45, 403.10(f). | 1. |
| RNC Status (Manual) Year | The year associated with the RNC Status (Manual) being reported. This data element is used for the official Quarterly Noncompliance Report (QNCR) or NPDES Noncompliance Report (NNCR). This data element can also be revised by the regulatory authority. | 122.21, 122.21(j)(6), 122.21(q), 123.45, 403.10(f). | 1. |
| RNC Status (Manual) Quarter | The quarter associated with the RNC Status (Manual) being reported. This data element is used for the official Quarterly Noncompliance Report (QNCR) or NPDES Noncompliance Report (NNCR). This data element can also be revised by the regulatory authority. | 122.21, 122.21(j)(6), 122.21(q), 123.45, 403.10(f). | 1. |
| Associated NPDES ID Number | If applicable, the unique identifier for each NPDES Permit that is related to another NPDES Permit. For example, this data element identifies the recipient POTW's NPDES ID for each satellite collection system, the suppliers of biosolids and sewage sludge to a land application site, and the one or more NPDES IDs for other permitted operators at the same construction site or industrial facility. This data element does not apply to municipal storm sewer systems (MS4s) as other data elements create linkages between these entities. | 122.2, 122.21, 122.21(j)(6), 122.21(q), 122.28(b)(2)(ii), 122.41(l)(4)(i), 122.41(l)(6) and (7), 122.41(m)(3), 122.42(e)(4), 123.26, 123.41(a), 503.18, 503.28, 503.48. | 1 through 5, 7, 8, and 9. |
| Associated NPDES ID Number Reason. | The unique code/description that identifies the reason for the association between two NPDES IDs (*e.g.,* ETP = Effluent Trade Partner, APR = Associated Permit Record, SIP = Switched To An Individual Permit, SGP = Switched To A General Permit. This data element does not apply to municipal storm sewer systems (MS4s) as other data elements create linkages between these entities. | 122.2, 122.21, 122.21(j)(6), 122.21(q), 122.28(b)(2)(ii), 122.41(l)(4)(i), 122.41(l)(6) and (7), 122.41(m)(3), 122.42(e)(4), 123.26, 123.41(a), 503.18, 503.28, 503.48. | 1 through 5, 7, 8, and 9. |
| Receiving POTW ID | This data element will identify for each Significant Industrial Users (SIUs) and Categorical Industrial Users (CIUs) the unique identifier of the one or more POTWs receiving the discharge. This includes non-domestic wastewater delivered by truck, rail, and dedicated pipe or other means of transportation to the one or more receiving POTWs. This data element only applies to SIUs and CIUs and will link the industrial discharger to the one or more receiving POTWs. | 122.21, 122.21(j)(6), | 1, 2, and 7. |
| SIC Code | The one or more four-digit Standard Industrial Classification (SIC) codes that represent the economic activities of the facility. This data element also applies to SIUs and CIUs that discharge (including non-domestic wastewater delivered by truck, rail, and dedicated pipe or other means of transportation) to one or more POTWs in states where the POTW is the Control Authority. A value of "4952" can be system generated for POTWs and TWTDS. | 122.21, 122.21(j)(6), 122.21(q), 122.28(b)(2)(ii), 403.10(f), 403.12(e), 403.12(h), 403.12(i), 503.18, 503.28, 503.48. | 1, 2, and 7. |
| SIC Code Primary Indicator | This data element will identify the primary economic activity, SIC code, of the facility. This data element is required for electronic data transfer between state and EPA systems. This data element also applies to SIUs and CIUs that discharge (including non-domestic wastewater delivered by truck, rail, and dedicated pipe or other means of transportation) to one or more POTWs in states where the POTW is the Control Authority. | 122.21, 122.21(j)(6), 122.21(q), 122.28(b)(2)(ii), 403.10(f), 403.12(e), 403.12(h), 403.12(i), 503.18, 503.28, 503.48. | 1, 2, and 7. |

TABLE 2—REQUIRED NPDES PROGRAM DATA—Continued

| Data name | Data description | CWA, regulatory (40 CFR), or other citation | NPDES data group No. (*see* Table 1) |
|---|---|---|---|
| NAICS Code | The six-digit North American Industry Classification System (NAICS) code/description that represents the economic activity of the facility. This field is optional if the ''SIC Code'' data element is provided for the facility. | EPA SIC/NAICS Data Standard, Standard No. EX000022.2, 6 January 2006, Office of Management and Budget, Executive Office of the President, Final Decision on North American Industry Classification System (62 FR 17288), 403.10(f). | 1, 2, and 7. |
| NAICS Code Primary Indicator | This data element will identify the primary economic activity, NAICS code, of the facility. This data element is required for electronic data transfer between state and EPA systems. This field is optional if the ''SIC Code'' data element is provided for the facility. | EPA SIC/NAICS Data Standard, Standard No. EX000022.2, 6 January 2006, Office of Management and Budget, Executive Office of the President, Final Decision on North American Industry Classification System (62 FR 17288), 403.10(f). | 1, 2, and 7. |
| Permittee Mailing Address | The mailing address of the permit holder | 122.21, 122.21(j)(6), 122.21(q), 122.28(b)(2)(ii), 403.10(f). | 1, 2. |
| Permittee Organization Formal Name. | The legal, formal name of the organization that holds the permit. | 122.21, 122.21(j)(6), 122.21(q), 122.28(b)(2)(ii), 403.10(f). | 1, 2. |
| Permittee City | The name of the city, town, or village where the mail is delivered for the permit holder. | 122.21, 122.21(j)(6), 122.21(q), 122.28(b)(2)(ii), 403.10(f). | 1, 2. |
| Permittee State | The U.S. Postal Service abbreviation that represents the state or state equivalent for the U.S. for the permit holder. | 122.21, 122.21(j)(6), 122.21(q), 122.28(b)(2)(ii), 403.10(f). | 1, 2. |
| Permittee Zip Code | The combination of the 5-digit Zone Improvement Plan (ZIP) code and the 4-digit extension code (if available) that represents the geographic segment that is a sub-unit of the ZIP Code assigned by the U.S. Postal Service to a geographic location for the permit holder. | 122.21, 122.21(j)(6), 122.21(q), 122.28(b)(2)(ii), 403.10(f). | 1, 2. |
| Residual Designation Determination Code. | Under section 402(p)(2)(E) and (6) and 40 CFR 122.26(a)(9)(i)(C) and (D), the authorized NPDES program or the EPA Regional Administrator may specifically designate stormwater discharges as requiring an NPDES permit. In this 'residual designation' process the NPDES permitting authority regulates stormwater discharges based on: (1) Wasteload allocations that are part of ''total maximum daily loads'' (TMDLs) that address the pollutant(s) of concern in the stormwater discharges [see 40 CFR 122.26(a)(9)(i)(C)]; or (2) the determination that the stormwater discharge, or category of stormwater discharges within a geographic area, contributes to a violation of a water quality standard or is a significant contributor of pollutants to waters of the United States [see 40 CFR 122.26(a)(9)(i)(D)]. This data element is the unique code/description that identifies the main basis for this residual designation determination. This data element only applies to stormwater permits. | 122.26(a)(9)(i)(C) and (D) and CWA section 402(p). | 1. |
| Electronic Reporting Waiver Type. | The unique code/description that identifies whether the authorized NPDES program has granted the permittee a waiver from electronic reporting in compliance with this part (1 = temporary waiver; 2 = permanent waiver). This data element should be left blank if the permittee does not have a waiver from electronic reporting in compliance with this part. | 123.26, 123.41(a) and CWA section 308. | 1. |

TABLE 2—REQUIRED NPDES PROGRAM DATA—Continued

| Data name | Data description | CWA, regulatory (40 CFR), or other citation | NPDES data group No. (*see* Table 1) |
|---|---|---|---|
| Electronic Reporting Waiver Expiration Date. | This is the expiration date for a temporary waiver from electronic reporting in compliance with this part. This data element should be left blank if the permittee has a permanent waiver from electronic reporting or if the permittee does not have a waiver from electronic reporting in compliance with this part. | 123.26, 123.41(a) and CWA section 308. | 1. |
| Electronic Submission Type (General Permit Reports). | This is the unique code/description for each general permit report submitted by the facility or entity. Notices, certifications, and waiver requests covered by this data element are listed in Table 1 in this appendix (*i.e.,* NPDES Data Group 2). This data element describes how each submission was electronically collected or processed by the initial recipient [see § 127.2(b)]. For example, these unique codes/descriptions include: (1) NPDES regulated entity submits NPDES program data using an EPA electronic reporting system; (2) NPDES regulated entity submits NPDES program data using an authorized NPDES program electronic reporting system; (3) NPDES regulated entity has temporary waiver from electronic reporting and submits NPDES program data on paper to the authorized NPDES program who then electronically uses manual data entry to electronically process these data; (4) NPDES regulated entity has a permanent waiver from electronic reporting and submits NPDES program data on paper to the authorized NPDES program who then electronically uses manual data entry to electronically process these data; (5) NPDES regulated entity has an episodic waiver from electronic reporting and submits NPDES program data on paper to the authorized NPDES program who then electronically uses manual data entry to electronically process these data; (6) NPDES regulated entity submits NPDES program data on paper in a form that allows the authorized NPDES program to use of automatic identification and data capture technology to electronically process these data; (7) NPDES regulated entity submits NPDES program data using another electronic reporting system (*e.g.,* third-party). This data element can sometimes be system generated (e.g., incorporated into an electronic reporting tool). This data element does not identify the electronic submission type of other reports (NPDES Data Groups = 3 through 10 in Table 1), which is tracked by the ''Electronic Submission Type (Compliance Monitoring Activity)'' data element. | 123.26, 123.41(a) and CWA section 308. | 1. |

TABLE 2—REQUIRED NPDES PROGRAM DATA—Continued

| Data name | Data description | CWA, regulatory (40 CFR), or other citation | NPDES data group No. (*see* Table 1) |
|---|---|---|---|
| NPDES Data Group Number ... | This is the unique code/description that identifies the types of NPDES program data that are required to be reported by the facility. This corresponds to Table 1 in this appendix (*e.g.,* 3 = Discharge Monitoring Report [40 CFR 122.41(l)(4)]). This data element can be system generated. This data element will record each NPDES Data Group that the facility is required to submit. For example, when a POTW is required to submit a Discharge Monitoring Report, Sewage Sludge/Biosolids Annual Program Report, Pretreatment Program Report, and Sewer Overflow/Bypass Event Report, the values for this data element for this facility will be 3, 4, 7, and 9. The following general permit reports will have the following values for this data element: 2a = Notice of Intent to discharge (NOI); 2b = Notice of Termination (NOT); 2c = No Exposure Certification (NOE); and 2d = Low Erosivity Waiver or Other Waiver from Stormwater Controls (LEW). | 122.2, 122.21, 122.21(j)(6), 122.21(q), 122.28(b)(2)(ii), 122.34(g)(3), 122.41(l)(4)(i), 122.41(l)(6) and (7), 122.41(m)(3), 122.42(c), 122.42(e)(4), 123.26, 123.41(a), 403.10, 403.12(e), 403.12(h), 403.12(i), 503.18, 503.28, 503.48 and CWA section 308. | 1. |
| **Narrative Conditions and Permit Schedules Information** | | | |
| [**Note:** As indicated in the ''CWA, Regulatory, or Other Citation'' column, these data elements also apply to Significant Industrial Users (SIUs) and Categorical Industrial Users (CIUs) that discharge (including non-domestic wastewater delivered by truck, rail, and dedicated pipe or other means of transportation) to one or more POTWs in states where EPA or the State is the Control Authority]. | | | |
| Permit Narrative Condition Code. | The unique code/description that identifies the type of narrative condition. | 122.47, 403.10(f) ..... | 1. |
| Permit Narrative Condition Number. | This number uniquely identifies a narrative condition and its elements for a permit. | 122.47, 403.10(f) ..... | 1. |
| Permit Schedule Date ..... | The date on which a permit schedule event is due to be completed and against which compliance will be measured. The date must be provided in YYYY–MM–DD format where YYYY is the year, MM is the month, and DD is the day. | 122.47, 403.10(f) ..... | 1. |
| Permit Schedule Actual Date ... | The date on which the permittee achieved the schedule event. The date must be provided in YYYY–MM–DD format where YYYY is the year, MM is the month, and DD is the day. | 122.47, 403.10(f) ..... | 1. |
| Required Report Received Date. | The date on which the regulatory authority receives a report from the permittee indicating that a scheduled event was completed (*e.g.,* the start of construction) or the date on which the regulatory authority received the required report. The date must be provided in YYYY–MM–DD format where YYYY is the year, MM is the month, and DD is the day. | 122.47, 403.10(f) ..... | 1. |
| Permit Schedule Event Code ... | The unique code/description indicating the one or more events with which the permittee is scheduled to comply. | 122.47, 403.10(f) ..... | 1. |
| **Permitted Feature Information** | | | |
| [**Note:** These 'Permitted Feature' data elements are only required to be submitted for permits that require limits or outfall monitoring for stationary point sources. Additionally, as indicated in the ''CWA, Regulatory, or Other Citation'' column, some of these data elements apply to Significant Industrial Users (SIUs) and Categorical Industrial Users (CIUs) that discharge (including non-domestic wastewater delivered by truck, rail, and dedicated pipe or other means of transportation) to one or more POTWs in states where EPA or the State is the Control Authority]. | | | |
| Permitted Feature Application Actual Average Flow (MGD). | The average flow that a permitted feature will actually discharge or transmit, in MGD, at the start of its permit term. This data element does not apply to regulated entities that do not discharge (*e.g.,* some biosolids/sewage sludge generators) and entities that only discharge stormwater. This data element may also not apply to some intermittent dischargers. | 122.21, 122.28(b)(2)(ii), 403.10(f). | 1, 2. |

TABLE 2—REQUIRED NPDES PROGRAM DATA—Continued

| Data name | Data description | CWA, regulatory (40 CFR), or other citation | NPDES data group No. (*see* Table 1) |
|---|---|---|---|
| Permitted Feature Identifier (Permit). | The identifier assigned for each location at which conditions are being applied (e.g., external outfall). This data element also identifies cooling water intake structures. | 122.21, 122.28(b)(2)(ii), 403.10(f). | 1, 2. |
| Permitted Feature Type | The code/description that uniquely identifies the type of permitted feature (*e.g.* external outfall, sum, intake structure, cooling water intake structure). | 122.21, 122.28(b)(2)(ii), 403.10(f). | 1, 2. |
| Receiving Waterbody Name for Permitted Feature. | The name of the waterbody that is or will likely receive the discharge from each permitted feature. | 122.21, 122.28(b)(2)(ii) | 1, 2. |
| Permitted Feature Longitude | The measure of the angular distance on a meridian east or west of the prime meridian for the permitted feature. The format for this data element is decimal degrees (*e.g.,* -77.029289) and the WGS84 standard coordinate system. | 122.21, 122.28(b)(2)(ii) | 1, 2. |
| Permitted Feature Latitude | The measure of the angular distance on a meridian north or south of the equator for the permitted feature. The format for this data element is decimal degrees (*e.g.,* 38.893829) and the WGS84 standard coordinate system. | 122.21, 122.28(b)(2)(ii) | 1, 2. |
| **Limit Set Information** | | | |
| [**Note:** These 'Limit Set' data elements are only required to be submitted for permits that require limits or outfall monitoring for stationary point sources. Additionally, as indicated in the ''CWA, Regulatory, or Other Citation'' column, these data elements apply to Significant Industrial Users (SIUs) and Categorical Industrial Users (CIUs) that discharge (including non-domestic wastewater delivered by truck, rail, and dedicated pipe or other means of transportation) to one or more POTWs in states where EPA or the State is the Control Authority]. | | | |
| Limit Set Designator | The alphanumeric field that is used to designate a particular grouping of parameters within a limit set. | 122.45, 403.10(f) | 1. |
| Limit Set Type | The unique code/description identifying the type of limit set (*e.g.,* scheduled, unscheduled). | 122.45, 403.10(f) | 1. |
| Modification Effective Date (Limit Set). | The effective date of the permit modification that updated or created a limit set. The date must be provided in YYYY–MM–DD format where YYYY is the year, MM is the month, and DD is the day. | 122.45, 403.10(f) | 1. |
| Modification Type (Limit Set) | The type of permit modification that updated or created this limit set (*e.g.,* major modification, minor modification, permit authorized change). | 122.45, 403.10(f) | 1. |
| Initial Monitoring Date | The date on which monitoring starts for the first monitoring period for the limit set. This date will be blank for unscheduled limit sets. The date must be provided in YYYY–MM–DD format where YYYY is the year, MM is the month, and DD is the day. | 122.45, 403.10(f) | 1. |
| Initial DMR Due Date | The date that the first compliance monitoring submission (*e.g.,* DMR) for the limit set is due to the regulatory authority. This date will be blank for unscheduled limit sets. The date must be provided in YYYY–MM–DD format where YYYY is the year, MM is the month, and DD is the day. This data element will also be used to track non-receipt tracking of periodic compliance monitoring data [40 CFR 403.12(e) and (h)] for Significant Industrial Users (SIUs) and Categorical Industrial Users (CIUs) that discharge (including non-domestic wastewater delivered by truck, rail, and dedicated pipe or other means of transportation) to one or more POTWs in states where EPA or the State is the Control Authority). | 122.45, 403.10(f) | 1. |
| Number of Report Units | The number of months covered in each compliance monitoring period (*e.g.,* monthly = 1, semi-annually = 6, quarterly = 3). | 122.45, 403.10(f) | 1. |

TABLE 2—REQUIRED NPDES PROGRAM DATA—Continued

| Data name | Data description | CWA, regulatory (40 CFR), or other citation | NPDES data group No. (*see* Table 1) |
|---|---|---|---|
| Number of Submission Units | The number of months between compliance monitoring submissions (*e.g.,* monthly = 1, semi-annually = 6, quarterly = 3). This data element will be blank for unscheduled limit sets For example, if the permittee was required to submit monthly reports every quarter, the number of report units would be one (*i.e.,* monthly) and the number of submission units would be three (*i.e.,* three months of information in each submission).. | 122.45, 403.10(f) | 1. |
| Limit Set Status | The status of the limit set (*e.g.,* active, inactive). Limit sets will not have violations generated when a limit set is inactive unless an enforcement action limit is present. | subpart C of 122, 403.10(f) | 1. |
| Limit Set Status Start Date | The date that the Limit Set Status started. The date must be provided in YYYY–MM–DD format where YYYY is the year, MM is the month, and DD is the day. | 123.45, 403.10(f) | 1. |
| **Limit Information** | | | |
| [**Note:** These 'Limit' data elements are only required to be submitted for permits that require limits or outfall monitoring for stationary point sources. Additionally, as indicated in the ''CWA, Regulatory, or Other Citation'' column, some of these data elements apply to Significant Industrial Users (SIUs) and Categorical Industrial Users (CIUs) that discharge (including non-domestic wastewater delivered by truck, rail, and dedicated pipe or other means of transportation) to one or more POTWs in states where EPA or the State is the Control Authority]. | | | |
| Monitoring Location Code | The unique code/description of the monitoring location at which sampling should occur for a limit parameter. | 122.45, 403.10(f) | 1. |
| Limit Season Number | Indicates the season of a limit and is used to enter different seasonal limits for the same parameter within a single limit start and end date. | 122.45, 403.10(f) | 1. |
| Limit Start Date | The date on which a limit starts being in effect for a particular parameter in a limit set. The date must be provided in YYYY–MM–DD format where YYYY is the year, MM is the month, and DD is the day. | 122.45, 403.10(f) | 1. |
| Limit End Date | The date on which a limit stops being in effect for a particular parameter in a limit set. The date must be provided in YYYY–MM–DD format where YYYY is the year, MM is the month, and DD is the day. | 122.45, 403.10(f) | 1. |
| Change of Limit Status Indicator. | The unique code/description that describes circumstances affecting limits, such as formal enforcement actions or permit modifications. | subpart C of 122, 403.10(f) | 1. |
| Limit Stay Type | The unique identifier of the type of stay applied to a limit (*e.g.,* X, Y, Z), which indicates whether the limits do not appear on the compliance monitoring report (*e.g.,* DMR) at all, are treated as monitor only, or have a stay value in effect during the period of the stay. | 122.45, 403.10(f) | 1. |
| Limit Stay Start Date | The date on which a limit stay begins. The date must be provided in YYYY–MM–DD format where YYYY is the year, MM is the month, and DD is the day. | 124.19, 403.10(f) | 1. |
| Limit Stay End Date | The date on which a limit stay is lifted. The date must be provided in YYYY–MM–DD format where YYYY is the year, MM is the month, and DD is the day. | 124.19, 403.10(f) | 1. |
| Reason for Limit Stay | The text that represents the reason a stay was applied to a permit. | 124.19, 403.10(f) | 1. |
| Stay Limit Value | The numeric limit value imposed during the period of the stay for the limit; if entered, during the stay period, the system will use this limit value for calculating compliance, rather than the actual limit value that was stayed. | 124.19, 403.10(f) | 1. |
| Limit Type | The unique code/description that indicates whether a limit is an enforceable, or alert limit (*e.g.,* action level, benchmark) that does not receive effluent violations. | 122.45, 403.10(f) | 1. |

TABLE 2—REQUIRED NPDES PROGRAM DATA—Continued

| Data name | Data description | CWA, regulatory (40 CFR), or other citation | NPDES data group No. (*see* Table 1) |
|---|---|---|---|
| Enforcement Action ID | The unique identifier for the enforcement action that imposed the enforcement action limit; this data element helps uniquely tie the limit record to the final order record. | 122.45, 403.10(f) | 1. |
| Final Order ID | The unique identifier for the Final Order that imposed the Enforcement Action limit; this data element ties the limit record to the Final Order record in the database. | 122.45, 403.10(f) | 1. |
| Modification Effective Date | The effective date of the permit modification that created this limit. The date must be provided in YYYY–MM–DD format where YYYY is the year, MM is the month, and DD is the day. | 122.62, 403.10(f) | 1. |
| Modification Type | The type of permit modification that created this limit (*e.g.* major, minor, permit authorized change). | 122.62, 403.10(f) | 1. |
| Limit Parameter Code | The unique code/description identifying the parameter being limited and/or monitored. | 122.41(j), 403.10(f) | 1. |
| Limit Months | The months that the limit applies | 122.46, 403.10(f) | 1. |
| Limit Value Type | The indication of the limit value type (*e.g.,* Quantity 1, Concentration 2). | 122.45(f), 403.10(f) | 1. |
| Limit Quantity or Concentration Units. | The unique code/description representing the unit(s) of measure applicable to quantity or concentration limits as entered by the user. | 122.45(f), 403.10(f) | 1. |
| Statistical Base Code | The unique code/description representing the unit of measure applicable to the limit and compliance monitoring activity (*e.g.,* DMR) values entered by the user (*e.g.,* 30-day average, daily maximum). | 122.45(d), 403.10(f) | 1. |
| Optional Monitoring Code | The code/description that indicates when monitoring is optional but not required (*e.g.,* DMR Non-Receipt violation generation will be suppressed for optional monitoring). | 122.45, 403.10(f) | 1. |
| Limit Value Qualifier | The unique code identifying the limit value operator (*e.g.,* "<", "=", ">"). | 122.45, 403.10(f) | 1. |
| Limit Value | The actual limit value number from the Permit or Enforcement Action Final Order. | 122.45, 403.10(f) | 1. |
| **Sewage Sludge/Biosolids Information on NPDES Permit Application or Notice of Intent** | | | |
| [**Note:** As indicated in the "CWA, Regulatory, or Other Citation" column, these data elements apply to Treatment Works Treating Domestic Sewage whose sewage sludge use or disposal practices are regulated by part 503.] | | | |
| Biosolids/Sewage Sludge Management Facility Type. | The unique code/description that identifies whether the facility was issued a permit as a biosolids/sewage sludge generator, processor, or end user (*e.g.,* land application site, surface disposal site, incinerator). For the Sewage Sludge/Biosolids Annual Report this data element is also the unique code/description that identifies an off-site facility or location receives biosolids or sewage sludge from this facility. This data element is also required for the Sewage Sludge/Biosolids Annual Report. | 122.21(q), 122.28(b)(2)(ii), 503.18, 503.28, 503.48. | 1, 2, and 4. |
| Biosolids or Sewage Sludge Treatment Processes (Permit). | The one or more unique codes/descriptions that identifies the biosolids or sewage sludge treatment process or processes at the facility. For example, this may include treatment processes in the following categories: preliminary operations (*e.g.,* sludge grinding and degritting), thickening (concentration), stabilization, anaerobic digestion, aerobic digestion, composting, conditioning, disinfection (*e.g.,* beta ray irradiation, gamma ray irradiation, pasteurization), dewatering (*e.g.,* centrifugation, sludge drying beds, sludge lagoons), heat drying, thermal reduction, and methane or biogas capture and recovery. | 122.21(q)(6), 122.28(b)(2)(ii) | 1, 2. |

TABLE 2—REQUIRED NPDES PROGRAM DATA—Continued

| Data name | Data description | CWA, regulatory (40 CFR), or other citation | NPDES data group No. (*see* Table 1) |
|---|---|---|---|
| Biosolids or Sewage Sludge Form (Permit). | The one or more unique codes/descriptions that identify the nature of each biosolids and sewage sludge material generated by the facility in terms of whether the material is a biosolid or sewage sludge and whether the material is ultimately conveyed off-site in bulk or in bags. The facility will separately report the form for each biosolids or sewage sludge management practice and pathogen class. | 122.21(q)(6), 122.28(b)(2)(ii) | 1, 2. |
| Biosolids or Sewage Sludge Management Practice (Permit). | The one or more unique codes/descriptions that identify the type of biosolids or sewage sludge management practice or practices (*e.g.,* land application, surface disposal, incineration) used by the facility. The facility will separately report the practice for each different form of biosolids and sewage sludge generated by the facility and pathogen class. | 122.21(q)(6), 122.28(b)(2)(ii) | 1, 2. |
| Biosolids or Sewage Sludge Pathogen Class (Permit). | The one or more unique codes/descriptions that identify the pathogen class or classes (*e.g.,* Class A, Class B, Not Applicable) for biosolids or sewage sludge generated by the facility. The facility will separately report the pathogen class for each biosolids or sewage sludge management practice used by the facility and for each biosolids or sewage sludge form. | 122.21(q)(6), 122.28(b)(2)(ii) | 1, 2. |
| Biosolids or Sewage Sludge Vector Attraction Reduction Options (Permit). | The one or more unique codes/descriptions that identify the option(s) used by the facility for vector attraction reduction. See a listing of these vector attraction reduction options at 40 CFR 503.33(b)(1) through (11). The facility will separately report the vector attraction reduction options for each biosolids or sewage sludge management practice used by the facility and for each biosolids or sewage sludge form as well as by each biosolids or sewage sludge pathogen class. | 122.21(q)(6), 122.28(b)(2)(ii) | 1, 2. |
| Biosolids or Sewage Sludge Pathogen Reduction Options (Permit). | The one or more unique codes/descriptions that identify the option(s) used by the facility to control pathogens (*e.g.,* Class A—Alternative 1, Class A—Alternative 2, Class A—Alternative 3, Class A—Alternative 4, Class A—Alternative 5, Class A—Alternative 6, Class B—Alternative 1, Class B—Alternative 2, Class B—Alternative 3, or pH Adjustment (Domestic Septage). The facility will separately report the pathogen reduction options for each biosolids or sewage sludge management practice used by the facility and by each biosolids or sewage sludge form as well as by each biosolids or sewage sludge pathogen class. | 122.21(q)(6), 122.28(b)(2)(ii) | 1, 2. |
| Biosolids or Sewage Sludge Amount (Permit). | This is the amount (in dry metric tons) of biosolids or sewage sludge applied to the land, prepared for sale or give-away in a bag or other container for application to the land, or placed on an active sewage sludge unit in the preceding 365-day period. This identification will be made for each biosolids or sewage sludge management practice used by the facility and by each biosolids or sewage sludge form as well as by each biosolids or sewage sludge pathogen class. | 122.21 (q), 122.28(b)(2)(ii) ..... | 1, 2. |
| **Animal Feeding Operation Information on NPDES Permit Application or Notice of Intent** | | | |
| Facility CAAP Designation ..... | A unique code (*e.g.,* "Yes", "No") to indicate whether the facility includes Concentrated Aquatic Animal Production (CAAP). | 122.21(i)(2), 122.24, 122.25, 122.28(b)(2)(ii). | 1, 2. |

TABLE 2—REQUIRED NPDES PROGRAM DATA—Continued

| Data name | Data description | CWA, regulatory (40 CFR), or other citation | NPDES data group No. (*see* Table 1) |
|---|---|---|---|
| Facility CAFO Type | The unique code/description that identifies whether the facility includes a small, medium or large Concentrated Animal Feeding Operation (CAFO). | 122.21(i)(1), 122.23, 122.28(b)(2)(ii). | 1, 2. |
| CAFO Designation Date | The date on which the facility is designated as a small or medium Concentrated Animal Feeding Operation (CAFO). The date must be provided in YYYY–MM–DD format where YYYY is the year, MM is the month, and DD is the day. | 122.23 | 1. |
| CAFO Designation Reason | The reason(s) the State Director or the Regional Administrator used to designate an animal feeding operation as a small or medium CAFO. [Ed note: Large and medium CAFO definitions are in 40 CFR 122.23(b)]. This text field can include the following factors: (1) the size of the AFO and the amount of wastes reaching waters of the United States; (2) the location of the AFO relative to waters of the United States; (3) the means of conveyance of animal wastes and process waste waters into waters of the United States; (4) the slope, vegetation, rainfall, and other factors affecting the likelihood or frequency of discharge of animal wastes manure and process waste waters into waters of the United States; and (5) other relevant factors. | 122.23(c) | 1. |
| CAFO Animal Types | The unique code/description that identifies the animal type(s) at the facility (*e.g.,* beef cattle, broilers, layers, swine weighing 55 pounds or more, swine weighing less than 55 pounds, mature dairy cows, dairy heifers, veal calves, sheep and lambs, horses, ducks, turkeys, other). | 122.21(i)(1)(v), 122.28(b)(2)(ii) | 1, 2. |
| CAFO Animal Maximum Numbers. | The estimated maximum number of each type of animal in open confinement or housed under roof (either partially or totally) which are held at the facility for a total of 45 days or more in a 12 month period. | 122.21(i)(1)(v), 122.28(b)(2)(ii) | 1, 2. |
| CAFO Animal Maximum Numbers in Open Confinement. | The estimated maximum number of each type of animal in open confinement which are held at the facility for a total of 45 days or more in a 12 month period. | 122.21(i)(1)(v), 122.28(b)(2)(ii) | 1, 2. |
| CAFO MLPW | The unique code/description that identifies the type of CAFO manure, litter, and process wastewater generated by the facility *i.e.* in a 12 month period. | 122.21(i)(1)(viii), 122.28(b)(2)(ii). | 1, 2. |
| CAFO MLPW Amounts | The estimated amount of CAFO manure, litter, and process wastewater generated by the facility *i.e.*in a 12 month period. | 122.21(i)(1)(viii), 122.28(b)(2)(ii). | 1, 2. |
| CAFO MLPW Amounts Units | The unit (*e.g.,* tons, gallons) for the estimated maximum amount of CAFO manure, litter, and process wastewater generated by the facility *i.e.* in a 12 month period. | 122.21(i)(1)(viii), 122.28(b)(2)(ii). | 1, 2. |
| CAFO MLPW Transferred | The estimated maximum amount of CAFO manure, litter, and process wastewater generated by the facility *i.e.*in a 12 month period that is transferred to other persons. The units for this data element will be the same as the units for the ''CAFO MLPW Amounts'' data element. | 122.21(i)(1)(ix), 122.28(b)(2)(ii). | 1, 2. |
| Total Number of Acres Available for Land Application. | Total number of acres under the control of the applicant that are available for land application of CAFO manure, litter, and process wastewater. | 122.21(i)(1)(vii), 122.28(b)(2)(ii). | 1, 2. |
| CAFO MLPW Containment and Storage Type. | The unique code/description describing the one or more types of CAFO manure, litter, and process wastewater containment and storage (*e.g.,* lagoon, holding pond, evaporation pond, anaerobic lagoon, storage lagoon, evaporation pond, aboveground storage tanks, belowground storage tanks, roofed storage shed, concrete pad, impervious soil pad, other) at the facility. | 122.21(i)(1)(vi), 122.28(b)(2)(ii). | 1, 2. |

TABLE 2—REQUIRED NPDES PROGRAM DATA—Continued

| Data name | Data description | CWA, regulatory (40 CFR), or other citation | NPDES data group No. (*see* Table 1) |
|---|---|---|---|
| CAFO MLPW Containment and Storage Maximum Capacity Amounts. | The estimated maximum capacity of each CAFO manure, litter, and process wastewater containment and storage type at the facility. | 122.21(i)(1)(vi), 122.28(b)(2)(ii). | 1, 2. |
| CAFO MLPW Containment and Storage Maximum Capacity Amounts Unit. | The unit for the estimated maximum capacity of each CAFO manure, litter, and process wastewater containment and storage type at the facility (*e.g.,* gallons). | 122.21(i)(1)(vi), 122.28(b)(2)(ii). | 1, 2. |
| **Construction and Industrial Stormwater Information [from the permitting authority derived from the No Exposure Certification, Low Erosivity Waiver, and Other Waiver From Stormwater Controls (see Exhibit 1 to 40 CFR 122.26(b)(15)]** | | | |
| No Exposure Certification Approval Date. | This is the date on which the No Exposure Certification (NOE) was authorized by the NPDES permitting authority. Submission of a No Exposure Certification means that the facility does not require NPDES permit authorization for its stormwater discharges due to the existence of a condition of ''no exposure.'' A condition of no exposure exists at an industrial facility when all industrial materials and activities are protected by a storm resistant shelter to prevent exposure to rain, snow, snowmelt, and/or runoff and the operator complies with all requirements at 40 CFR 122.26(g)(1) through (4). This date is provided by the permitting authority. The date must be provided in YYYY–MM–DD format where YYYY is the year, MM is the month, and DD is the day. | 122.26(g) | 1. |
| Low Erosivity Waiver or Other Waiver From Stormwater Controls Approval Date. | The NPDES Stormwater Phase II Rule allows NPDES permitting authorities to accept low erosivity waivers and other waivers from stormwater controls (LEWs) for small construction sites. The waiver process exempts small construction sites (disturbing under five acres) from NPDES permitting requirements when the rainfall erosivity factor is less than five during the period of construction activity as well as other criteria [see Exhibit 1 to 40 CFR 122.26(b)(15)]. This is the date when the NPDES permitting authority granted such waiver, based on information from the entity requesting the waiver; this date is provided by the permitting authority. The date must be provided in YYYY–MM–DD format, where YYYY is the year, MM is the month, and DD is the day. | Exhibit 1 to 40 CFR 122.26(b)(15). | 1. |
| **Construction Stormwater Information on NPDES Permit Application, Notice of Intent, or Waiver Request [including construction activity requiring permit coverage under 40 CFR 122.26(b)(14)(x)]** | | | |
| Total Area of the Site | This is an estimate of the total area of the construction site at the time of permit application (in acres). This data element is only required for individual construction stormwater permit applications. Values under 5 acres will be reported to the nearest tenth of an acre or nearest quarter acre. Authorized NPDES programs will have the discretion to choose whether permittees should report to the nearest tenth of an acre or nearest quarter acre for values under 5 acres. | 122.26(c)(1)(ii)(B) | 1. |

TABLE 2—REQUIRED NPDES PROGRAM DATA—Continued

| Data name | Data description | CWA, regulatory (40 CFR), or other citation | NPDES data group No. (*see* Table 1) |
|---|---|---|---|
| Total Activity Area (Construction). | This is the estimate of the total area of the construction activities at the time of permit application or filing of notice of intent to be covered under a general permit (in acres). Areas of construction activity include areas of clearing, grading, and/or excavation and areas of construction support activity (*e.g.,* concrete or asphalt batch plants, equipment staging yards, material storage areas, excavated materials disposal areas, borrow areas). Values under 5 acres will be reported to the nearest tenth of an acre or nearest quarter acre. Authorized NPDES programs will have the discretion to choose whether permittees should report to the nearest tenth of an acre or nearest quarter acre for values under 5 acres. | 122.26, 122.28(b)(2)(ii) | 1, 2. |
| Post-Construction Total Impervious Area. | This is the estimate of total impervious area of the site after the construction addressed in the permit application is completed (in acres). This estimate is made at the time of the permit application. This data element is only required for individual construction stormwater permit applications. Values under 5 acres will be reported to the nearest tenth of an acre or nearest quarter acre. Authorized NPDES programs will have the discretion to choose whether permittees should report to the nearest tenth of an acre or nearest quarter acre for values under 5 acres. | 122.26(c)(1)(ii)(E) | 1. |
| Proposed Stormwater Best Management Practices for Construction Activities. | This is the one or more unique codes that list the most important proposed measures, including best management practices, to control pollutants in stormwater discharges from construction activities. This data element includes temporary structural measures (*e.g.,* check dams, construction road stabilization, silt fences), vegetative measures (*e.g.,* mulching, seeding, sodding, straw/hay bale dikes), and permanent structures (*e.g.,* land grading, riprap slope protection, streambank protection). This data element field is only required for individual construction stormwater permit applications. | 122.26(c)(1)(ii)(C) | 1. |
| Post-Construction Stormwater Best Management Practices for Construction Activities. | This is the one or more unique codes that list the most important proposed long-term measures and permanent structures to control pollutants in stormwater discharges, which will occur after the completion of construction operations. The codes for this data element include long-term control measures (*e.g.,* cleaning and removal of debris after major storm events, harvesting vegetation when a 50 percent reduction in the original open water surface area occurs, sediment cleanout, repairing embankments, side slopes, and control structures) and permanent structures (*e.g.,* land grading, riprap slope protection, streambank protection, ponds, wetlands, infiltration basins, sand filters, filter strips). This data element is only required for individual construction stormwater permit applications. | 122.26(c)(1)(ii)(D) | 1. |
| Soil and Fill Material Description. | This is a text field describes the nature of fill material and existing data describing soils or the quality of the discharge. This data element is only required for individual construction stormwater permit applications. | 122.26(c)(1)(ii)(E) | 1. |
| Runoff Coefficient of the Site (Post-Construction). | This is an estimate of the overall runoff coefficient of the site after the construction addressed in the permit application is completed. This data element is only required for individual construction stormwater permit applications. | 122.26(c)(1)(ii)(E) | 1. |

TABLE 2—REQUIRED NPDES PROGRAM DATA—Continued

| Data name | Data description | CWA, regulatory (40 CFR), or other citation | NPDES data group No. (*see* Table 1) |
|---|---|---|---|
| Estimated Construction Project Start Date. | The estimated start date for the construction project covered by the NPDES permit. The date must be provided in YYYY–MM–DD format where YYYY is the year, MM is the month, and DD is the day. | 122.26, 122.28(b)(2)(ii) ..... | 1, 2. |
| Estimated Construction Project End Date. | The estimated end date for the construction project covered by the NPDES permit. The date must be provided in YYYY–MM–DD format where YYYY is the year, MM is the month, and DD is the day. | 122.26, 122.28(b)(2)(ii) ..... | 1, 2. |
| **Industrial Stormwater Information on NPDES Permit Application [excluding construction activity requiring permit coverage under 40 CFR 122.26(b)(14)(x)]** | | | |
| Total Surface Area Drained (Industrial). | This is an estimate of the total surface area drained at the facility at the time of permit application (in acres). This data field is only required for individual industrial stormwater permit applications. Values under 5 acres will be reported to the nearest tenth of an acre or nearest quarter acre. Authorized NPDES programs will have the discretion to choose whether permittees should report to the nearest tenth of an acre or nearest quarter acre for values under 5 acres. | 122.26(c)(1)(i)(B) ..... | 1. |
| Total Impervious Surface Area (Industrial). | This is the estimate of the total impervious area at the facility at the time of permit application (in acres). This data element is only required for individual industrial stormwater permit applications. Values under 5 acres will be reported to the nearest tenth of an acre or nearest quarter acre. Authorized NPDES programs will have the discretion to choose whether permittees should report to the nearest tenth of an acre or nearest quarter acre for values under 5 acres. | 122.26(c)(1)(i)(B) ..... | 1. |
| Proposed Stormwater Best Management Practices (Industrial). | This is the one or more codes that identify the structural and non-structural control measures (including treatment) to control pollutants in stormwater discharges from industrial activities. This data element includes long-term measures (*e.g.,* good housekeeping of waste-handling and waste-storage areas, collecting debris and yard material, proper management of vehicle wash and equipment maintenance areas) and permanent structures (*e.g.,* covers, pads, diversion berms or channels, vegetative buffer strips, erosion prevention and sediment control such as land grading, riprap slope protection, streambank protection) to control pollutants in stormwater discharges. This data element is only required for individual industrial stormwater permit applications. | 122.26(c)(1)(i)(B) ..... | 1. |
| **Municipal Separate Storm Sewer System (MS4) Information on NPDES Permit Application or Notice of Intent** | | | |
| MS4 Permit Class ..... | The unique code/description that identifies the size of the MS4 permit holder (*e.g.,* Phase I = large or medium MS4s, Phase II = small MS4s). | 122.26, 122.28(b)(2)(ii) ..... | 1, 2. |
| Unique Identifier for Each Municipality Covered Under MS4 Permit. | The unique identifier for each municipality covered under MS4 permit. Use of this identifier allows for greater geographic resolution for the MS4 components being tracked. This unique identifier does not change over time. Use of this unique identifier is similar to how the 'Permitted Feature Identifier (Permit)' data element is used to distinguish between permitted features. | 122.21(f), 122.26(d) 122.28(b)(2)(ii), 122.34(g)(3), and 122.42(c). | 1, 2, 6. |

TABLE 2—REQUIRED NPDES PROGRAM DATA—Continued

| Data name | Data description | CWA, regulatory (40 CFR), or other citation | NPDES data group No. (*see* Table 1) |
|---|---|---|---|
| MS4 Public Education Program | The one or more unique codes/descriptions that identifies the educational materials the permittee intends to distribute or equivalent outreach activities the permittee will implement to inform the target audience about the impacts of stormwater discharges and the steps the public can take to reduce stormwater pollutants. | 122.21(f), 122.26(d)(2)(iv)(A)(6), (B)(5) and (6), and (D)(4); 122.28(b)(2)(ii), 122.34(b)(1), 122.34(d)(1)(i). | 1, 2. |
| MS4 Measurable Goals Associated With Public Education Program. | The one or more unique codes/descriptions that identifies measurable goals associated with the public education programs including, as appropriate, the months and years in which the permittee will undertake required actions, including interim milestones and the frequency of the action. This data element only applies to Phase II MS4s. | 122.34(d)(1)(ii), 122.28(b)(2)(ii). | 1, 2. |
| MS4 Public Involvement and Participation Program. | The one or more unique codes/descriptions that identifies how the permittee intends to involve the public and at minimum comply with State, Tribal, and local public notice requirements to implement its public involvement and participation program. | 122.21(f), 122.26(d)(2)(iv), 122.28(b)(2)(ii), 122.34(b)(2), 122.34(d)(1)(i). | 1, 2. |
| MS4 Measurable Goals for the Public Involvement and Participation Program. | The one or more unique codes/descriptions that identifies the measurable goals associated with the public involvement and participation program including, as appropriate, the months and years in which the permittee will undertake required actions, including interim milestones and the frequency of the action. This data element only applies to Phase II MS4s. | 122.28(b)(2)(ii) 122.34(d)(1)(ii) | 1, 2. |
| MS4 Illicit Discharge Detection and Elimination. | The one or more unique codes/descriptions that identify how the permittee will comply with Illicit Discharge Detection and Elimination requirements, including (at a minimum): (1) The status of the permittee's storm sewer system map showing the location of all outfalls and names and locations of all waters of the U.S. that receive discharges from those outfalls; (2) the status of the ordinance or other regulatory mechanism to prohibit non-stormwater discharges into the permittee's MS4; (3) the procedures and actions the permittee takes to enforce the prohibition of non-stormwater discharges to the permittee's MS4; (4) the status of the program that identifies the procedures and actions the permittee will take to detect and address non-stormwater discharges, including illegal dumping, to the permittee's MS4; and (5) the status of procedures and actions the permittee will take to inform public employees, businesses and the general public of hazards associated with illegal discharges and improper disposal of waste. | 122.21(f), 122.26(d)(1)(iii)(B), 122.26(d)(2)(i)(B) and (C), 122.26(d)(2)(iv)(B), 122.28(b)(2)(ii), 122.34(b)(3)(ii)(A)–(D), 122.34(d)(1)(i). | 1, 2. |
| MS4 Measurable Goals Associated With Illicit Discharge Detection and Elimination Program. | The one or more unique codes/descriptions that identifies the measurable goals associated with the illicit discharge detection and elimination program, including, as appropriate, the months and years in which the permittee will undertake required actions, including interim milestones and the frequency of the action. This data element only applies to Phase II MS4s. | 122.34(d)(1)(ii) ..... | 1, 2. |

TABLE 2—REQUIRED NPDES PROGRAM DATA—Continued

| Data name | Data description | CWA, regulatory (40 CFR), or other citation | NPDES data group No. (*see* Table 1) |
|---|---|---|---|
| MS4 Construction Site Stormwater Runoff Control. | The one or more unique codes/descriptions that identify how the permittee will comply with the Construction Site Runoff Control requirements, including (at a minimum): (1) status of the ordinance or other regulatory mechanism to require erosion and sediment controls, including sanctions to ensure compliance; (2) status of requirements for construction site operators to implement appropriate erosion and sediment control BMPs and control waste at the construction site that may cause adverse impacts to water quality; (3) status of procedures for site plan review that incorporate consideration of potential water quality impacts; (4) status of procedures for receipt and consideration of information submitted by the public; and (5) status of procedures for site inspection and enforcement of control measures. | 122.21(f), 122.26(d)(2)(iv)(D), 122.28(b)(2)(ii), 122.34(b)(4)(ii), 122.34(d)(1)(i). | 1, 2. |
| MS4 Measurable Goals Associated with the Construction Site Stormwater Runoff Control Program. | The one or more unique codes/descriptions that identify the measurable goals associated with the construction program, including, as appropriate, the months and years in which the permittee will undertake required actions, including interim milestones and the frequency of the action. This data element only applies to Phase II MS4s. | 122.34(d)(1)(ii) ..... | 1, 2. |
| MS4 Post-Construction Stormwater Management In New Development And Redevelopment. | The one or more unique codes/descriptions that identify how the permittee will comply with the Post-Construction Stormwater Management in New Development and Redevelopment requirements, including (at a minimum): (1) Status of ordinance or other regulatory mechanism to address post-construction runoff from new development and redevelopment projects; (2) how the permittee plans to address stormwater runoff from new development and redevelopment projects that disturb a minimum of greater than or equal to one acre (including if the permittee requires on-site retention of stormwater; and (3) status of a plan to ensure adequate long-term operation and maintenance of BMPs for controlling runoff from new development and redevelopment projects. | 122.21(f), 122.26(d)(2)(iv)(A)(2), 122.28(b)(2)(ii), 122.34(b)(5), 122.34(d)(1)(i). | 1, 2. |
| MS4 Measurable Goals Associated with the Post-Construction: Stormwater Management Program. | The one or more unique codes/descriptions that identify the measurable goals associated with the post-construction program, including, as appropriate, the months and years in which the permittee will undertake required actions, including interim milestones and the frequency of the action. This data element only applies to Phase II MS4s. | 122.34(d)(1)(ii) ..... | 1, 2. |
| MS4 Pollution Prevention/Good Housekeeping for Municipal Operations Program. | The one or more unique codes/descriptions that identify how the permittee will comply with the Pollution Prevention/Good Housekeeping requirements. | 122.21(f), 122.26(d)(2)(iv)(A)(1), (2) and (3), 122.28(b)(2)(ii), 122.34(b)(6)(i), 122.34(d)(1)(i). | 1, 2. |
| MS4 Additional Measures ..... | The one or more unique codes/descriptions that identify any other additional measures that are required by the permit such as controls to be consistent with the assumptions and requirements of any available wasteload allocation prepared by a state and approved by EPA. This data element is optional if there are no MS4 additional measures. | 122.28(b)(2)(ii), 122.34(b), 122.34(d) 122.44(d)(1)(vii)(B). | 1, 2. |

TABLE 2—REQUIRED NPDES PROGRAM DATA—Continued

| Data name | Data description | CWA, regulatory (40 CFR), or other citation | NPDES data group No. (*see* Table 1) |
|---|---|---|---|
| **POTW Information on NPDES Permit Application or Notice of Intent** | | | |
| Name of Collection System ..... | This is the unique name of each collection system that provides flow to the permittee. This includes unincorporated connector districts and satellite collection systems, which are sanitary sewers owned or operated by another entity that conveys sewage or industrial wastewater to this permittee. This data element applies to POTWs. | 122.1(b) and 122.21(j)(1)(iv), 122.28(b)(2)(ii). | 1, 2. |
| Owner Type of Collection System. | The unique code/description that identifies the ownership type for each unique collection system that provides flow to the permittee (*e.g.,* municipality owned, privately owned). This includes unincorporated connector districts and satellite collection systems. This data element applies to POTWs. | 122.1(b) and 122.21(j)(1)(iv), 122.28(b)(2)(ii). | 1, 2. |
| Collection System Identifier ..... | This is the NPDES permit number (''NPDES ID'') for each unique collection system that provides flow to the permittee. If there is no NPDES permit number for the collection system this data element will be a unique identifier for each collection system that provides flow to the permittee. This includes unincorporated connector districts and satellite collection systems. This data element applies to POTWs. | 122.1(b) and 122.21(j)(1)(iv), 122.28(b)(2)(ii). | 1, 2. |
| Population of Collection System. | This is the estimated population for each unique collection system that provides flow to the permittee. This includes unincorporated connector districts and satellite collection systems. This data element applies to POTWs. | 122.1(b) and 122.21(j)(1)(iv), 122.28(b)(2)(ii). | 1, 2. |
| Percentage of Collection System That Is a Combined Sewer System. | For each unique collection system that provides flow to the permittee, this is the estimated percentage of the collection system that is a combined sewer system. This includes unincorporated connector districts and satellite collection systems. This estimated percentage is calculated separately for each unique collection system that provides flow to the permittee and is based on the service population of each unique collection system. This data element applies to POTWs. | 122.1(b) and 122.21(j)(1)(iv) and (vii), 122.28(b)(2)(ii). | 1, 2. |
| POTW Wastewater Treatment Technology Level Description. | This data element describes the level of wastewater treatment technology [*e.g.,* raw discharge (no treatment), primary treatment, secondary wastewater treatment, advanced treatment] used at the facility. This data element only applies to POTWs. | 122.21(j)(3)(iii), 122.28(b)(2)(ii) and CWA section 516. | 1, 2. |
| POTW Wastewater Disinfection Technology. | The one or more unique codes/descriptions that describe the types of disinfection technology that are used at the facility (*e.g.,* chlorination, ozonation, ultraviolet disinfection). This data element will also use a code/description to identify if this facility is using dechlorination, which may be required if the facility uses chlorination for disinfection. This data element only applies to POTWs. | 122.21(j)(3)(iii), 122.28(b)(2)(ii). | 1, 2. |
| POTW Wastewater Treatment Technology Unit Operations. | The one or more unique codes/descriptions that describe the wastewater treatment technology unit operations (*e.g.,* grit removal, flow equalization, complete mix activated sludge secondary treatment, trickling filter, facultative lagoon, biological nitrification) used at the facility. This data element is required for POTWs that have a design flow capacity equal to or above 10 million gallons per day (MGD) and is optional for POTWs with a design flow capacity below 10 MGD. | 122.21(j)(2)(ii)(A), 122.28(b)(2)(ii) and CWA section 516. | 1, 2. |

TABLE 2—REQUIRED NPDES PROGRAM DATA—Continued

| Data name | Data description | CWA, regulatory (40 CFR), or other citation | NPDES data group No. (*see* Table 1) |
|---|---|---|---|
| **Combined Sewer Overflow Information** | | | |
| [**Note:** All Phase II and post-Phase II combined sewer system NPDES permittees are required to complete and implement a long-term CSO control plan (LTCP) as described in EPA's Combined Sewer Overflow (CSO) Control Policy (19 April 1994; 59 Federal Register 18688–18698). These data will be updated by the authorized NPDES program on a timely basis as changes occur with the combined sewer system and the LTCP as well as with the POTW's implementation and compliance with the LTCP.] | | | |
| Long-Term CSO Control Plan Permit Requirements and Compliance. | This data element uses a unique code/description that identifies whether the permit requires the permit holder to complete and implement a LTCP and whether the permit holder is in compliance with these permit requirements. | 122.41(h), 122.43, 123.41(a) and CWA section 402(q)(1), Combined Sewer Overflow (CSO) Control Policy (59 FR 18688–18698, 19 April 1994). | 1. |
| Nine Minimum CSO Controls Developed. | This data element uses a unique code/description to identify by number each of the nine minimum control measures outlines in the CSO Control Policy that the permit holder has implemented in compliance with the applicable permit and/or enforcement mechanism. These unique codes are: (1) Proper operation and regular maintenance programs for the sewer system and the CSOs; (2) Maximum use of the collection system for storage; (3) Review and modification of pretreatment requirements to assure CSO impacts are minimized; (4) Maximization of flow to the publicly owned treatment works for treatment; (5) Prohibition of CSOs during dry weather; (6) Control of solid and floatable materials in CSOs; (7) Pollution prevention; (8) Public notification to ensure that the public receives adequate notification of CSO occurrences and CSO impacts; and (9) Monitoring to effectively characterize CSO impacts and the efficacy of CSO controls. For example, if the permit holder has only developed the "Maximum use of the collection system for storage" minimum control measure then the permitting authority will record "2" for this data element. Likewise, if the permit holder has developed all nine minimum control measures then permitting authority will record 1, 2, 3, 4, 5, 6, 7, 8, and 9 for this data element. | 122.41(h), 122.43, 123.41(a) and CWA section 402(q)(1), Combined Sewer Overflow (CSO) Control Policy (59 FR 18688–18698, 19 April 1994). | 1. |
| Nine Minimum CSO Controls Implemented. | This data element uses a unique code/description to identify by number each of nine minimum control measures outlined in the CSO Control Policy that the permit holder has implemented in compliance with the applicable permit and/or enforcement mechanism. These unique codes are: (1) Proper operation and regular maintenance programs for the sewer system and the CSOs; (2) Maximum use of the collection system for storage; (3) Review and modification of pretreatment requirements to assure CSO impacts are minimized; (4) Maximization of flow to the publicly owned treatment works for treatment; (5) Prohibition of CSOs during dry weather; (6) Control of solid and floatable materials in CSOs; (7) Pollution prevention; (8) Public notification to ensure that the public receives adequate notification of CSO occurrences and CSO impacts; and (9) Monitoring to effectively characterize CSO impacts and the efficacy of CSO controls. For example, if the permit holder has only developed the "Maximum use of the collection system for storage" minimum control measure then the permitting authority will record "2" for this data element. Likewise, if the permit holder has developed all nine minimum control measures then permitting authority will record 1, 2, 3, 4, 5, 6, 7, 8, and 9 for this data element. | 122.41(h), 122.43, 123.41(a) and CWA section 402(q)(1), Combined Sewer Overflow (CSO) Control Policy (59 FR 18688–18698, 19 April 1994). | 1. |

TABLE 2—REQUIRED NPDES PROGRAM DATA—Continued

| Data name | Data description | CWA, regulatory (40 CFR), or other citation | NPDES data group No. (*see* Table 1) |
|---|---|---|---|
| LTCP Submission and Approval Type. | This data element uses a unique code/description to identify whether the most recent version of the LTCP was received and approved by the permitting authority (*e.g.,* most recent version of the LTCP was submitted by permit holder and was approved by the permitting authority, most recent version of the LTCP was submitted by permit holder but has not yet been approved by permitting authority, permit holder is required to submit a revised LTCP but the permitting authority has not yet received the revised LTCP from the permit holder, permit holder has not yet submitted a LTCP). | 122.41(h), 122.43, 123.41(a) and CWA section 402(q)(1), Combined Sewer Overflow (CSO) Control Policy (59 FR 18688–18698, 19 April 1994). | 1. |
| LTCP Approval Date ..... | This data element identifies the date when the permitting authority approved the most current version of the LTCP. This data element will be updated for each revision to the LTCP. The date must be provided in YYYY–MM–DD format where YYYY is the year, MM is the month, and DD is the day. | 122.41(h), 122.43, 123.41(a) and CWA section 402(q)(1), Combined Sewer Overflow (CSO) Control Policy (59 FR 18688–18698, 19 April 1994). | 1. |
| Enforceable Mechanism and Schedule to Complete LTCP and CSO Controls. | This data element uses a unique code/description to identify whether the permit holder is on an enforceable schedule to complete all required LTCP and CSO controls and the type of enforcement mechanism. | 122.41(h), 122.43, 123.41(a) and CWA section 402(q)(1), Combined Sewer Overflow (CSO) Control Policy (59 FR 18688–18698, 19 April 1994). | 1. |
| Actual Date Completed LTCP and CSO Controls. | This data element identifies the date by which the permit holder completed construction and implementation of all currently required LTCP and CSO controls. This data element will be updated for each revision to the LTCP and CSO controls. The date must be provided in YYYY–MM–DD format where YYYY is the year, MM is the month, and DD is the day. | 122.41(h), 122.43, 123.41(a) and CWA section 402(q)(1), Combined Sewer Overflow (CSO) Control Policy (59 FR 18688–18698, 19 April 1994). | 1. |
| Approved Post-Construction Compliance Monitoring Program. | This data element uses a unique code/description to indicate whether the permit holder is currently implementing an approved post-construction compliance monitoring program. | 122.41(h), 122.43, 123.41(a) and CWA section 402(q)(1), Combined Sewer Overflow (CSO) Control Policy (59 FR 18688–18698, 19 April 1994). | 1. |
| Other CSO Control Measures with Compliance Schedule. | This data element uses a unique code/description to identify whether the permit holder has other CSO control measures specified in a compliance schedule, beyond those identified in the nine minimum controls, long-term CSO control plan (LTCP), or a plan for sewer system separation. | 122.41(h), 122.43, 123.41(a) and CWA section 402(q)(1), Combined Sewer Overflow (CSO) Control Policy (59 FR 18688–18698, 19 April 1994). | 1. |
| **Pretreatment Information on NPDES Permit Application or Notice of Intent (this includes permit application data required for all new and existing POTWs [40 CFR 122.21(j)(6)]** | | | |
| [**Note:** These data will be added or updated through the Annual Pretreatment Program Report, see 40 CFR 403.12(i), as needed. It is also important to note that the 'Associated NPDES ID Number' identifies the receiving POTW's NPDES permit number for each industrial user.] | | | |
| Pretreatment Program Required Indicator. | The unique code/description that describes whether the permitted municipality is required to develop or implement a pretreatment program (in accordance with 40 CFR 403). | 122.28(b)(2)(ii), 122.44(j) ..... | 1. |
| Pretreatment Program Approval or Modification Date. | The date the pretreatment program was approved or substantially modified. This data element can be system generated by carrying forward the most recent date (approval or modification). The date must be provided in YYYY–MM–DD format where YYYY is the year, MM is the month, and DD is the day. | 122.28(b)(2)(ii), 403.8(a) and (b), 403.11. | 1. |
| Pretreatment Program Modification Type. | The unique code describing the type of substantial modification to a POTW Pretreatment Program, which includes the initial start of a pretreatment program. | 122.28(b)(2)(ii), 403.8(a) and (b), 403.11, 403.18. | 1. |

TABLE 2—REQUIRED NPDES PROGRAM DATA—Continued

| Data name | Data description | CWA, regulatory (40 CFR), or other citation | NPDES data group No. (*see* Table 1) |
|---|---|---|---|
| Industrial User Type | The unique code/description that identifies the type of each industrial user discharging to a POTW [*e.g.,* Significant Industrial User (SIU), Standard Categorical Industrial Users (CIU), Non-Significant Categorical Industrial User (NSCIU), and Middle Tier Categorical Industrial User (MTCIU)]. This data element is at the permit or control mechanism level and is required for each SIU, CIU, NSCIU, and MTCIU. This data element also applies to SIUs and CIUs that discharge non-domestic wastewater by truck, rail, and dedicated pipe or other means of transportation to one or more POTWs. | 122.21(j)(6), 122.28(b)(2)(ii), 122.44(j), 403.12(i). | 1, 2, 7. |
| Significant Industrial User Subject to Local Limits. | The unique code (*e.g.,* ''Yes'', ''No'') that identifies for each Significant Industrial User (SIU) or Categorical Industrial User (CIU) discharging to a POTW (including non-domestic wastewater delivered by truck, rail, and dedicated pipe or other means of transportation) whether the SIU is subject to local limits. | 122.21(j)(6), 122.28(b)(2)(ii), 122.44(j), 403.12(i). | 1, 2, 7. |
| Significant Industrial User Subject to Local Limits More Stringent Than Categorical Standards. | The unique code (*e.g.,* ''Yes'', ''No'') that identifies for each Categorical Industrial User (CIU) discharging to a POTW (including non-domestic wastewater delivered by truck, rail, and dedicated pipe or other means of transportation) whether the CIU is subject to one or more local limits that are more stringent than the applicable categorical standards. | 122.21(j)(6), 122.28(b)(2)(ii), 122.44(j), 403.12(i). | 1, 2, 7. |
| Applicable Categorical Standards. | This data element will identify for each Categorical Industrial User (CIU) discharging to a POTW (including non-domestic wastewater delivered by truck, rail, and dedicated pipe or other means of transportation) the applicable categorical standard(s) by its 40 CFR part number (*e.g.,* Metal Finishing—part 433, Electrical and Electronic Components—Part 469). This data element will track the one or more applicable categorical standards even when the CIU is subject to one or more local limits that are more stringent than the applicable categorical standards. | 122.21(j)(6), 122.28(b)(2)(ii), 122.44(j), 403.12(i). | 1, 2, 7. |
| Significant Industrial User Wastewater Flow Rate. | This data element will identify for each Significant Industrial User (SIU) or Categorical Industrial User (CIU) that is discharging to a POTW (including non-domestic wastewater delivered by truck, rail, and dedicated pipe or other means of transportation) the estimated maximum monthly average wastewater flow rate (in gallons per day). | 122.21(j)(6), 122.28(b)(2)(ii), 122.44(j). | 1, 2. |
| Industrial User Causing Problems at POTW. | The unique code/description that identifies for each Significant Industrial User (SIU) or Categorical Industrial User (CIU) whether it caused or contributed to any problems (including upset, bypass, interference, pass-through) at a POTW within the past four and one-half calendar years. EPA regulations require the Control Authority to develop and enforce local limits when the discharge from an IU causes or contributes to any problems (including upset, interference, and bypass) at the receiving POTW's effluent discharge or biosolids/sewage sludge management. This data element also applies to SIUs and CIUs that discharge non-domestic wastewater by truck, rail, and dedicated pipe or other means of transportation to one or more POTWs. | 122.21(j)(6), 122.28(b)(2)(ii), 122.44(j)(2)(ii), 403.5(c). | 1, 2. |
| Receiving RCRA Waste | The unique code/description that identifies whether a POTW has received RCRA hazardous waste by truck, rail, or dedicated pipe within the last three calendar years. | 122.21(j)(7), 122.28(b)(2)(ii), 122.44(j). | 1, 2. |

TABLE 2—REQUIRED NPDES PROGRAM DATA—Continued

| Data name | Data description | CWA, regulatory (40 CFR), or other citation | NPDES data group No. (*see* Table 1) |
|---|---|---|---|
| Receiving Remediation Waste | The unique code/description that identifies whether the POTW has received RCRA or CERLCA waste from off-site remedial activities within the last three calendar years. | 122.21(j)(7), 122.44(j) | 1, 2. |
| Control Authority Identifier | This data element identifies the one or more Control Authorities for each Significant Industrial User (SIU) or Categorical Industrial User (CIU). When the Control Authority is a POTW this data element will use the POTW's NPDES ID. There will also be a unique identifier for each state and EPA Region for SIUs and CIUs when they are the Control Authority. | 122.28(b)(2)(ii), 122.44(j) | 1, 2. |
| **Cooling Water Intake Information on NPDES Permit Application or Notice of Intent** | | | |
| Cooling Water Intake Applicable Subpart. | The unique code/description that identifies the regulatory subpart the facility is subject to [*e.g.,* 1 = New Facility under 40 CFR part 125, subpart I, 2 = New Offshore Oil and Gas Facility under 40 CFR part 125, subpart N, 3 = Existing Facility under 40 CFR part 125, subpart J, 4 = BPJ Facility under 40 CFR 125.80(c), 40 CFR 125.90(b), 40 CFR 125.130(c), or 40 CFR 401.14]. | 122.21(r), 122.28(b)(2)(ii), subparts I, J, and N of 125, 401.14, and CWA section 316(b). | 1, 2. |
| Design Intake Flow for Cooling Water Intake Structure(s). | Design Intake Flow (DIF) means the value, in units of million gallons per day (MGD), assigned to each cooling water intake structure design that corresponds to the maximum instantaneous rate of flow of water the cooling water intake system is capable of withdrawing from a source waterbody. The facility's DIF may be adjusted to reflect permanent changes to the maximum flow capability of the cooling water intake system to withdraw cooling water, including pumps permanently removed from service, flow limit devices, and physical limitations of the piping. DIF does not include values associated with emergency and fire suppression capacity or redundant pumps (*i.e.,* back-up pumps). For new facilities this is the design maximum flow capacity of the cooling water intake structure. See 40 CFR 125.83 and 125.92. This data element will be reported for each cooling water intake structure, which will have a "Permitted Feature ID." Specific monitoring protocols and frequency of monitoring will be determined by the Director. | 122.21(r), 122.28(b)(2)(ii), 125.80, 125.86, 125.90, 125.92, 125.95, 125.131, 125.136, 401.14, and CWA section 316(b). | 1, 2. |

TABLE 2—REQUIRED NPDES PROGRAM DATA—Continued

| Data name | Data description | CWA, regulatory (40 CFR), or other citation | NPDES data group No. (*see* Table 1) |
|---|---|---|---|
| Actual Intake Flow for Cooling Water Intake Structure(s). | This actual flow value, in units of MGD, is intended to represent on-the-ground intake flow for each cooling water intake structure at the facility, as opposed to the DIF, which is based on maximum design flow intake. For existing facility, Actual Intake Flow (AIF) means the average flow rate of water withdrawn on an annual basis by each cooling water intake structure over the past three years. After October 14, 2019, AIF means the average flow rate of water withdrawn on an annual basis by each cooling water intake structure over the previous five years. Actual intake flow is measured at a location within the cooling water intake structure that the Director deems appropriate. The calculation of actual intake flow includes days of zero flow. AIF does not include flows associated with emergency and fire suppression capacity. See 40 CFR 125.92. This data element will be reported for each cooling water intake structure, which will have a ''Permitted Feature ID.'' Specific monitoring protocols and frequency of monitoring will be determined by the Director. | 122.21(r), 122.28(b)(2)(ii), 125.86,125.92(a), 125.95, 125.136, 401.14, and CWA section 316(b). | 1, 2. |
| Location Type for Cooling Water Intake Structure. | The unique code/description that identifies the location and description for each cooling water intake structure [*e.g.,* 1 = shoreline intake description (flushed, recessed), 2 = intake canal, 3 = embayment, bank, or cove, 4 = submerged offshore intake, 5 = near-shore submerged intake, 6 = shoreline submerged intake, 7 = Offshore Velocity Cap (800 foot minimum distance from shoreline), 8 = other]. Each cooling water intake structure will have its own ''Permitted Feature ID''. | 122.21(r), 122.28(b)(2)(ii), 125.86, 125.95, 125.136, 401.14 and CWA section 316(b). | 1, 2. |
| Actual Through-Screen Velocity | This is the actual through-screen velocity (in feet/second) of the water intake through the screen for each cooling water intake structure at an existing facility. This is the measured average intake velocity as water passes through the structural components of a screen measured perpendicular to the screen mesh during normal operations. See 40 CFR 125.94. This data element will be reported for each cooling water intake structure, which will have a ''Permitted Feature ID.'' Specific monitoring protocols and frequency of monitoring will be determined by the Director. | 122.21(r), 122.28(b)(2), 125.86, 125.94, 125.95, 125.136, 401.14 and CWA section 316(b). | 1, 2. |
| Source Water for Cooling Purposes. | The unique code/description that describes the one or more source water for cooling purpose for each cooling water intake structure [*e.g.,* 1 = Ocean, 2 = Estuary, 3 = Great Lake, 4 = Fresh River, 5 = Lake/Reservoir, 6 = contract or arrangement with an independent supplier (or multiple suppliers)]. Each cooling water intake structure will have its own ''Permitted Feature ID''. | 122.21(r), 122.28(b)(2)(ii), 125.86, 125.95, 125.136, 401.14 and CWA section 316(b). | 1, 2. |

TABLE 2—REQUIRED NPDES PROGRAM DATA—Continued

| Data name | Data description | CWA, regulatory (40 CFR), or other citation | NPDES data group No. (*see* Table 1) |
|---|---|---|---|
| Cooling Water Intake Structure Chosen Compliance Method. | The unique code/description to indicate the one or more compliance method selected for each cooling water intake structure based on EPA's CWA section 316(b) regulations or based on BPJ. For new facilities for example, Track I, Track II, alternative requirements, etc. For existing facilities, which of the 40 CFR 125.94(c) compliance options were chosen and reported as part of 40 CFR 122.21(r)(6), whether the facility has chosen to comply on an intake basis or facility wide, or whether alternative requirements were requested. Facilities have the option to comply on a facility wide or on an intake basis. Each cooling water intake structure will have its own ''Permitted Feature ID''. | 122.21(r)(6), 122.28(b)(2)(ii), 125.84, 125.85, 125.94, 125.134, 125.135, 401.14 and CWA section 316(b). | 1, 2. |
| Source Water Baseline Biological Characterization Data: Threatened or Endangered Status. | For new and existing facilities, a unique code/description that identifies whether there are Federally-listed threatened or endangered species (or relevant taxa) that might be susceptible to impingement and entrainment at the facility's cooling water intake structures. This unique code/description will also identify whether designated critical habitat is in the vicinity of facility's cooling water intake structure. | 122.21(r)(4), 122.28(b)(2), 125.86, 125.95, 125.136, 401.14 and CWA section 316(b). | 1, 2. |
| **CWA section 316(a) Thermal Variance Information on NPDES Permit Application or Notice of Intent** | | | |
| Thermal Variance Request Type. | The unique code/description that describes the thermal variance request submitted by the discharger (*e.g.,* 1 = new request, 2 = renewal request). | 125, subpart H and CWA section 316(a). | 1. |
| Public Notice of Section 316(a) Requests. | This is the unique code that describes whether the NPDES permitting authority included the information required under 40 CFR 124.57(a) in the public notice regarding the CWA section 316(a) request. | 124.57, 125, subpart H and CWA section 316(a). | 1. |
| Thermal Variance Granted Date. | This is the most recent date when the NPDES permitting authority granted or renewed a CWA section 316(a) variance for the controlling NPDES permit. The date must be provided in YYYY–MM–DD format where YYYY is the year, MM is the month, and DD is the day. | 122.28(b)(2)(ii), subpart H of 125 and CWA section 316(a). | 1. |
| **Compliance Monitoring Activity Information (General)** | | | |
| Compliance Monitoring Identifier. | The unique identifier for the compliance monitoring activity performed by the authorized NPDES program and EPA (e.g., inspections). This data element can be system generated. | 123.26, 123.41(a) and CWA section 308. | 1. |

TABLE 2—REQUIRED NPDES PROGRAM DATA—Continued

| Data name | Data description | CWA, regulatory (40 CFR), or other citation | NPDES data group No. (*see* Table 1) |
|---|---|---|---|
| Permitted Feature Identifier (Compliance Monitoring Activity). | The unique identifier for the permitted feature number(s) entered by the user for the inspected or monitored permitted feature(s). This data element will use the same number used by 'Permitted Feature Identifier (Permit)' data element for each compliance monitoring activity permitted feature. This will provide a unique link between each compliance monitoring activity permitted feature and the corresponding NPDES permitted feature. This data element can be left blank if the compliance monitoring activity does not involve a permitted feature. For Sewer Overflow/Bypass Event Reports this data element will identify the permitted feature(s), if any, for each Sewer Overflow/Bypass Identifier. The POTW can leave this data element blank on the Sewer Overflow/Bypass Event Report if the sewer overflows are caused by an extreme weather event (*e.g.,* hurricane) that floods the entire sewer system and are too numerous to count. This data element applies to compliance monitoring activities performed by the authorized NPDES program and EPA (e.g., inspections) as well as compliance monitoring reports submitted by the NPDES regulated entity (e.g., DMRs, program reports). | 122.34(g)(3), 122.41(l)(4)(i), 122.41(l)(6) and (7), 122.41(m)(3), 123.26, 123.41(a), 122.42(c), 403.12(e), 403.12(h) and CWA section 308. | 1, 3, 4, 6, 8, and 9. |
| Electronic Submission Type (Compliance Monitoring Activity). | This is the unique code/description for each report submitted by the NPDES regulated entity. Report submissions covered by the data element are listed in Table 1 in this appendix (i.e., NPDES Data Groups 3 through 10). This data element describes how each submission was electronically collected or processed by the initial recipient [see § 127.2(b)]. For example, these unique codes/descriptions include: (1) NPDES regulated entity submits NPDES program data using an EPA electronic reporting system; (2) NPDES regulated entity submits NPDES program data using an authorized NPDES program electronic reporting system; (3) NPDES regulated entity has temporary waiver from electronic reporting and submits NPDES program data on paper to the authorized NPDES program who then electronically uses manual data entry to electronically process these data; (4) NPDES regulated entity has a permanent waiver from electronic reporting and submits NPDES program data on paper to the authorized NPDES program who then electronically uses manual data entry to electronically process these data; (5) NPDES regulated entity has an episodic waiver from electronic reporting and submits NPDES program data on paper to the authorized NPDES program who then electronically uses manual data entry to electronically process these data; (6) NPDES regulated entity submits NPDES program data on paper in a form that allows the authorized NPDES program to use of automatic identification and data capture technology to electronically process these data; (7) NPDES regulated entity submits NPDES program data using another electronic reporting system (*e.g.,* third-party). This data element can sometimes be system generated (*e.g.,* incorporated into an electronic reporting tool). This data element does not identify the electronic submission type | 123.26, 123.41(a) and CWA section 308. | 1. |

TABLE 2—REQUIRED NPDES PROGRAM DATA—Continued

| Data name | Data description | CWA, regulatory (40 CFR), or other citation | NPDES data group No. (*see* Table 1) |
|---|---|---|---|
| | of general permit reports (NPDES Data Group =2 in Table 1), which is tracked by the ''Electronic Submission Type (General Permit Reports)'' data element. This data element applies to information submitted by NPDES regulated entities and does not apply to compliance monitoring information generated by authorized NPDES programs and EPA (*e.g.,* inspection data). | | |
| **Compliance Monitoring Activity Information (General Data Generated from Authorized NPDES Programs and EPA)** | | | |
| Compliance Monitoring Activity Actual End Date. | The actual date on which the compliance monitoring activity ended. For example, the date of an authorized NPDES program inspection of a facility can be used for this data element. The date must be provided in YYYY–MM–DD format where YYYY is the year, MM is the month, and DD is the day. | 123.26, 123.41(a) and CWA section 308. | 1. |
| Compliance Monitoring Activity | The unique code/description that identifies each compliance monitoring activity taken by the authorized NPDES program (*e.g.,* inspection, investigation, information request, offsite records review). | 123.26, 123.41(a) and CWA section 308. | 1. |
| Compliance Monitoring Type ... | The unique code/description that identifies each compliance monitoring activity type taken by a regulatory Agency (*e.g.,* audit, biomonitoring, case development, diagnostic, evaluation, reconnaissance with sampling, reconnaissance without sampling, sampling). | 123.26, 123.41(a) and CWA section 308. | 1. |
| Biomonitoring Test Type ..... | The unique code/description that identifies the type of biomonitoring inspection method (*e.g.,* acute, chronic, or flow through) and sample type (*e.g.,* grab, composite). This data element supplements the Compliance Monitoring Type data element. This data element only applies to compliance monitoring activities that involve biomonitoring. | 123.26, 123.41(a) and CWA section 308. | 1. |
| Compliance Monitoring Action Reason. | The unique code/description that identifies the reason for the initiation of the compliance monitoring activity (*e.g.,* Agency Priority, Citizen Complaint/Tip, Core Program). | 123.26, 123.41(a) and CWA section 308. | 1. |
| Was this a State, Federal or Joint (State/Federal) Inspection? | This data element identifies if the inspection is a joint inspection by federal, state, tribal, or territorial personnel. Only one value for this data element may be used for each compliance monitoring activity [*e.g.,* State, Federal, Joint (State/Federal)]. | 123.26, 123.41(a) and CWA section 308. | 1. |
| Programs Evaluated ..... | The unique code/description for the one or more programs evaluated or related to the compliance monitoring activity (*e.g.,* NPDES Base Program, Biosolids/Sewage Sludge, Pretreatment, and MS4). | 123.26, 123.41(a) and CWA section 308. | 1. |
| **Compliance Monitoring Activity Information (Program Data Generated from Authorized NPDES Programs and EPA)** | | | |
| Deficiencies Identified Through the Biosolids/Sewage Sludge Compliance Monitoring. | This is the unique code/description that that identifies each deficiency in the facility's biosolids and sewage sludge program (40 CFR part 503) for each compliance monitoring activity (*e.g.,* inspections, audits) by the regulatory authority. This data element includes unique codes to identify when the facility failed to comply with any applicable permit requirements or enforcement actions. The values for this data element will distinguish between noncompliance and significant noncompliance (SNC). | 123.26, 123.41(a), 123.45 and CWA section 308. | 1. |

TABLE 2—REQUIRED NPDES PROGRAM DATA—Continued

| Data name | Data description | CWA, regulatory (40 CFR), or other citation | NPDES data group No. (*see* Table 1) |
|---|---|---|---|
| Deficiencies Identified Through the MS4 Compliance Monitoring. | This is the unique code/description that that identifies each deficiency in the MS4's program to control stormwater pollution for each compliance monitoring activity (*e.g.,* inspections, audits) by the regulatory authority. This data element includes unique codes to identify when the MS4 failed to comply with any applicable permit requirements or enforcement actions. The values for this data element will distinguish between noncompliance and significant noncompliance (SNC). | 123.26, 123.41(a), 123.45 and CWA section 308. | 1. |
| Deficiencies Identified Through the Pretreatment Compliance Monitoring. | This is the unique code/description that that identifies each deficiency in the POTW's authorized pretreatment program for each pretreatment compliance monitoring activity (*e.g.,* inspections, audits) by the regulatory authority. The values for this data element will distinguish between noncompliance and significant noncompliance (SNC). These unique codes include: (1) Failure to enforce against pass through and/or interference; (2) failure to submit required reports within 30 days; (3) failure to meet compliance schedule milestones within 90 days; (4) failure to issue/reissue control mechanisms to 90% of SIUs within 6 months; (5) failure to inspect or sample 80% of SIUs within the past 12 months; and (6) failure to enforce standards and reporting requirements. | 123.26, 123.41(a), 123.45, 403.10, and CWA section 308. | 1. |
| Deficiencies Identified Through the Sewer Overflow/Bypass Compliance Monitoring. | This is the unique code/description that that identifies each deficiency in the POTW's control of combined sewer overflows, sanitary sewer overflows, or bypass events for each compliance monitoring activity (*e.g.,* inspections, audits) by the regulatory authority. This data element includes unique codes to identify when a POTW has failed to provide 24-hour notification to the NPDES permitting authority or failed to submit the Sewer Overflow/Bypass Event Report within the required 5-day period. This data element also includes unique codes to identify when the POTW failed to comply with any applicable long-term CSO control plan, permit requirements, or enforcement actions. The values for data element will distinguish between noncompliance and significant noncompliance (SNC). | 122.41(h), 122.41(l)(6) and (7), 122.43, 123.26, 123.41(a), and CWA sections 308 and 402(q)(1). | 1. |
| **Compliance Monitoring Activity Information (AFO/CAFO Program Data Generated from Authorized NPDES Programs and EPA)** | | | |
| Animal Types (Inspection) ..... | The unique code/description that identifies the animal type(s) at the facility at the time of inspection (*e.g.,* beef cattle, broilers, layers, swine weighing 55 pounds or more, swine weighing less than 55 pounds, mature dairy cows, dairy heifers, veal calves, sheep and lambs, horses, ducks, turkeys, other). | 122.23, 123.26, 123.41(a), and CWA section 308. | 1. |
| Animal Numbers (Inspection) ... | The number of each type of animal in open confinement or housed under roof (either partially or totally) which are held at the facility at the time of inspection. | 122.23, 123.26, 123.41(a) and CWA section 308. | 1. |
| Animal Numbers in Open Confinement (Inspection). | The number of each type of animal in open confinement which are held at the facility at the time of inspection. | 122.23, 123.26, 123.41(a) and CWA section 308. | 1. |
| MLPW Containment and Storage Type (Inspection). | The one or more types of containment and storage (*e.g.,* anaerobic lagoon, roofed storage shed, storage ponds, underfloor pits, above ground storage tanks, below ground storage tanks, concrete pad, impervious soil pad, other) at the facility at the time of inspection. | 122.23, 123.26, 123.41(a) and CWA section 308. | 1. |

TABLE 2—REQUIRED NPDES PROGRAM DATA—Continued

| Data name | Data description | CWA, regulatory (40 CFR), or other citation | NPDES data group No. (*see* Table 1) |
|---|---|---|---|
| MLPW Containment and Storage Type Within Design Capacity (Inspection). | The one or more unique codes/descriptions that identifies whether or not the facility is operating within the design capacity for each type of containment and storage used by the facility for MLPW at the time of inspection. | 122.23, 123.26, 123.41(a) and CWA section 308. | 1. |
| AFO/CAFO Unauthorized Discharges (Inspection). | A unique code (*e.g.,* ''Yes'', ''No'') that indicates whether there evidence of unauthorized discharge(s) of pollutants from the facility's production area and/or land application area(s) to a water of the U.S. | 122.23, 123.26, 123.41(a) and CWA section 308. | 1. |
| Permit Requirements Implementation (Inspection). | The unique code/description that identifies whether or not the facility is properly implementing its NPDES permit requirements, including the applicable Nutrient Management Plan (NMP) or other nutrient management planning, at the time of inspection. | 122.23, 123.26, 123.41(a) and CWA section 308. | 1. |
| **Compliance Monitoring Activity Information (Discharge Monitoring Report, and Pretreatment Periodic Compliance Reports for Significant Industrial Users (SIUs) and Categorical Industrial Users (CIUs) when EPA or the State is the Control Authority) [Note: Authorized NPDES programs will identify in the applicable NPDES permits will identify whether MS4 regulated entities are required to submit DMRs.]** | | | |
| Limit Set Designator (Compliance Monitoring Activity). | The unique identifier tying the compliance monitoring activity (*e.g.,* DMR submission) to the corresponding Limit Set record. | 122.41(l)(4)(i), 123.26, 123.41(a), 403.12(e), 403.12(h). | 3, 6, 8. |
| Parameter Code (Compliance Monitoring Activity). | The unique code/description identifying the parameter reported on the compliance monitoring activity (*e.g.,* DMR submission). | 122.41(l)(4)(i), 123.26, 123.41(a), 403.12(e), 403.12(h). | 3, 6, 8. |
| Monitoring Location Code (Compliance Monitoring Activity). | The unique code/description that identifies the monitoring location at which the sampling occurred for a compliance monitoring activity parameter (*e.g.,* DMR submission). | 122.41(l)(4)(i), 123.26, 123.41(a), 403.12(e), 403.12(h). | 3, 6, 8. |
| Limit Season Number (Compliance Monitoring Activity). | The unique identifier tying the compliance monitoring activity (*e.g.,* DMR submission) to the Limit Season Number of the corresponding limit. This data element is necessary as a parameter can have different seasonal limits within a single limit start and end date. | 122.41(l)(4)(i), 123.26, 123.41(a), 403.12(e), 403.12(h). | 3, 6, 8. |
| Monitoring Period End Date (Compliance Monitoring Activity). | The monitoring period end date for the values covered by the compliance monitoring activity (*e.g.,* DMR submission). The date must be provided in YYYY–MM–DD format where YYYY is the year, MM is the month, and DD is the day. | 122.41(l)(4)(i), 123.26, 123.41(a), 403.12(e), 403.12(h). | 3, 6, 8. |
| No Data Indicator (NODI) (Compliance Monitoring Activity). | The unique code/description that indicates the reason that ''No Discharge'' or ''No Data'' was reported on the compliance monitoring activity (*e.g.,* DMR submission) (*e.g.,* B = Below Detection Limit, C = No Discharge). | 122.41(l)(4)(i), 123.26, 123.41(a), 403.12(e), 403.12(h). | 3, 6, 8. |
| Value (Compliance Monitoring Activity). | The number value reported on the compliance monitoring activity (*e.g.,* DMR form). | 122.41(l)(4)(i), 123.26, 123.41(a), 403.12(e), 403.12(h). | 3, 6, 8. |
| Quantity or Concentration Units (Compliance Monitoring Activity). | The unique code/description that identifies the one or more units of measure that are applicable to quantity or concentration limits and measurements as entered on the compliance monitoring activity (*e.g.,* DMR submission). This field is optional if the units are the same as the limit units. | 122.41(l)(4)(i), 123.26, 123.41(a), 403.12(e), 403.12(h). | 3, 6, 8. |
| Value Received Date (Compliance Monitoring Activity). | The date the compliance monitoring value was received by the regulatory authority (*e.g.,* DMR submission). The date must be provided in YYYY–MM–DD format where YYYY is the year, MM is the month, and DD is the day. | 122.41(l)(4)(i), 123.26, 123.41(a), 403.12(e), 403.12(h). | 1. |
| Value Type (Compliance Monitoring Activity). | The unique code/description identifying a value type (*e.g.,* Quantity 1, Quantity 2, Concentration 1, Concentration 2, Concentration 3) on a compliance monitoring activity (*e.g.,* DMR submission). | 122.41(l)(4)(i), 123.26, 123.41(a), 403.12(e), 403.12(h). | 3, 6, 8. |

TABLE 2—REQUIRED NPDES PROGRAM DATA—Continued

| Data name | Data description | CWA, regulatory (40 CFR), or other citation | NPDES data group No. (*see* Table 1) |
|---|---|---|---|
| Value Qualifier (Compliance Monitoring Activity). | The unique code identifying the qualifier for the reported value (*e.g.,* "<", "=", ">") on a compliance monitoring activity (*e.g.,* DMR submission). This field is optional if the qualifier is "=". | 122.41(l)(4)(i), 123.26, 123.41(a), 403.12(e), 403.12(h). | 3, 6, 8. |
| **Compliance Monitoring Activity Information (Periodic Program Reports)** | | | |
| Program Report Received Date | The date the program report was received. The date must be provided in YYYY–MM–DD format where YYYY is the year, MM is the month, and DD is the day. | These are data elements that are common to reports required in parts 122, 123, 403, and 503. | 1. |
| Program Report Event ID ..... | The unique identifier for each program report submission. This will provide for unique tracking of program report submissions. This data element can be system generated. | These are data elements that are common to reports required in parts 122, 123, 403, and 503. | 1. |
| Start Date of Reporting Period (Program Report). | The start date of the reporting period for the program report. The date must be provided in YYYY–MM–DD format where YYYY is the year, MM is the month, and DD is the day. For the Sewer Overflow/Bypass Event Report this is the start or best estimate of the start date for each Sewer Overflow/Bypass Identifier. | These are data elements that are common to reports required in parts 122, 123, 403, and 503. | 4, 5, 6, 7, 9, 10. |
| End Date of Reporting Period (Program Report). | The end date of the reporting period for the program report. The date must be provided in YYYY–MM–DD format where YYYY is the year, MM is the month, and DD is the day. For the Sewer Overflow/Bypass Event Report this is the end or best estimate of the end date for each Sewer Overflow/Bypass Identifier. | These are data elements that are common to reports required in parts 122, 123, 403, and 503. | 4, 5, 6, 7, 9, 10. |
| NPDES Data Group Number (Program Report). | This data element identifies the NPDES Data Group for each program report submission. This corresponds to Table 1 in this appendix {*e.g.,* 7 = Pretreatment Program Reports [40 CFR 403.12(i)]}.This data element also applies to Significant Industrial User Compliance Reports in Municipalities Without Approved Pretreatment Programs [40 CFR 403.12(e) and (h)], which is NPDES Data Group Number 8 (Table 1 in this appendix). This can be a system generated data element. | These are data elements that are common to reports required in parts 122, 123, 403, and 503. | 4 through 10. |
| **Compliance Monitoring Activity Information (Data Elements Specific to Sewage Sludge/Biosolids Annual Program Reports)** | | | |
| Biosolids or Sewage Sludge Treatment Processes. | The one or more unique codes/descriptions that identify the biosolids or sewage sludge treatment process or processes at the facility. For example, this data element uses codes to identify treatment processes in the following categories: preliminary operations (*e.g.,* sludge grinding and degritting), thickening (concentration), stabilization, anaerobic digestion, aerobic digestion, composting, conditioning, disinfection (*e.g.,* beta ray irradiation, gamma ray irradiation, pasteurization), dewatering (*e.g.,* centrifugation, sludge drying beds, sludge lagoons), heat drying, thermal reduction, and methane or biogas capture and recovery. | 503.18, 503.28, 503.48 ..... | 4. |
| Biosolids or Sewage Sludge Analytical Methods. | The one or more unique codes/descriptions that identify each of the analytic methods used by the facility to analyze enteric viruses, fecal coliforms, *helminth ova, Salmonella sp.,* and other regulated parameters. For example, EPA requires facilities to monitor for the certain parameters, which are listed in Tables 1, 2, 3, and 4 at 40 CFR 503. 13 and Tables 1 and 2 at 40 CFR 503.23. This data element stores each analytic methods used by the facility only once for each annual report (not for each parameter measurement). | 503.8(b), 503.18, 503.28, 503.48. | 4. |

TABLE 2—REQUIRED NPDES PROGRAM DATA—Continued

| Data name | Data description | CWA, regulatory (40 CFR), or other citation | NPDES data group No. (*see* Table 1) |
|---|---|---|---|
| Biosolids or Sewage Sludge Form. | The one or more unique codes/descriptions that identify the nature of each biosolids and sewage sludge material generated by the facility in terms of whether the material is a biosolid or sewage sludge and whether the material is ultimately conveyed off-site in bulk or in bags. The facility will separately report the form for each biosolids or sewage sludge management practice or practices used by the facility and pathogen class. | 503.18, 503.28, 503.48 ..... | 4. |
| Biosolids or Sewage Sludge Management Practice. | The one or more unique codes/descriptions that identify the type of biosolids or sewage sludge management practice or practices (*e.g.,* land application, surface disposal, incineration) used by the facility. The facility will separately report the management practice for each biosolids or sewage sludge form and pathogen class. This data element will also identify the management practices used by surface disposal site owners/operators (see 40 CFR 503.24). | 503.18, 503.28, 503.48 ..... | 4. |
| Biosolids or Sewage Sludge Pathogen Class. | The one or more unique codes/descriptions that identify the pathogen class or classes [*e.g.,* Class A, Class B, Not Applicable (Incineration)] for biosolids or sewage sludge generated by the facility. The facility will separately report the pathogen class for each biosolids or sewage sludge management practice used by the facility and by each biosolids or sewage sludge form. | 503.18, 503.28, 503.48 ..... | 4. |
| Biosolids or Sewage Sludge Amount (Program Report). | This is the amount (in dry metric tons) of biosolids or sewage sludge applied to the land, prepared for sale or give-away in a bag or other container for application to the land, or placed on an active sewage sludge unit. This identification will be made for each biosolids or sewage sludge management practice used by the facility and by each biosolids or sewage sludge form as well as by each biosolids or sewage sludge pathogen class. | 503.18, 503.28, 503.48 ..... | 4. |
| Biosolids or Sewage Sludge Pathogen Reduction Options. | The one or more unique codes/descriptions that identify the options used by the facility to control pathogens (*e.g.,* Class A—Alternative 1, Class A—Alternative 2, Class A—Alternative 3, Class A—Alternative 4, Class A—Alternative 5, Class A—Alternative 6, Class B—Alternative 1, Class B—Alternative 2, Class B—Alternative 3, or pH Adjustment (Domestic Septage). The facility will separately report the pathogen reduction options for each biosolids or sewage sludge management practice used by the facility and by each biosolids or sewage sludge form as well as by each biosolids or sewage sludge pathogen class. | 503.18, 503.28, 503.48 ..... | 4. |
| Biosolids or Sewage Sludge Vector Attraction Reduction Options. | The one or more unique codes/descriptions that identify the options used by the facility for vector attraction reduction. See a listing of these vector attraction reduction options at 40 CFR 503.33(b)(1) through (11). The facility will separately report the vector attraction reduction options for each biosolids or sewage sludge management practice used by the facility and by each biosolids or sewage sludge form as well as by each biosolids or sewage sludge pathogen class. | 503.18, 503.28, 503.48 ..... | 4. |

TABLE 2—REQUIRED NPDES PROGRAM DATA—Continued

| Data name | Data description | CWA, regulatory (40 CFR), or other citation | NPDES data group No. (*see* Table 1) |
|---|---|---|---|
| Biosolids or Sewage Sludge Monitored Parameter. | This is the biosolids or sewage sludge parameter that is monitored by the facility. If there is more than one class, then the facility will separately report each monitored parameter for each biosolids or sewage sludge management practice used by the facility and by each biosolids or sewage sludge form. EPA requires facilities to monitor for the certain parameters, which are listed in Tables 1, 2, 3, and 4 at 40 CFR 503.13 and Tables 1 and 2 at 40 CFR 503.23, pathogens (*e.g.,* fecal coliform, *Salmonella sp.,* enteric viruses, *helminth ova*), and vector attraction reduction parameters (*e.g.,* specific oxygen uptake rate, and total, fixed, and volatile solids). | 503.18, 503.28, 503.48 ..... | 4. |
| Biosolids or Sewage Sludge Monitored Parameter Value. | This is the value of the Biosolids or Sewage Sludge Monitored Parameter. | 503.18, 503.28, 503.48 ..... | 4. |
| Biosolids or Sewage Sludge Monitored Parameter Units. | This is the measurement unit (*e.g.,* mg/kg) associated with the Biosolids or Sewage Sludge Monitored Parameter Value. | 503.18, 503.28, 503.48 ..... | 4. |
| Biosolids or Sewage Sludge Monitored Parameter End Date. | This is the end date of the monthly monitoring period for the biosolids or sewage sludge sampling (*e.g.,* 1/31/2015 for biosolids or sewage sludge monitoring data in January 2015). This data element is used to track the frequency of biosolids or sewage sludge monitoring in the reporting period (*e.g.,* annual, quarterly, bi-monthly, or monthly). For example, see Table 1 of 40 CFR 503.16 (Land Application), Table 1 of 40 CFR 503.26 (Surface Disposal). | 503.18, 503.28, 503.48 ..... | 4. |
| Biosolids or Sewage Sludge—Surface Disposal Maximum Allowable Pollutant Concentration. | This data element is applicable to facilities that use an active surface disposal sites (*e.g.,* monofills, surface impoundments, lagoons, waste piles, dedicated disposal sites, and dedicated beneficial use sites) without a liner. This data element identifies the maximum allowable pollutant concentration for each of the three pollutants: Arsenic, chromium, and nickel (in units of mg/kg). This data element will use Tables 1 and 2 of 40 CFR 503.23 or the procedures identified in 40 CFR 503.23(b). | 503.23, 503.28 ..... | 4. |
| Biosolids or Sewage Sludge—Land Application or Surface Disposal Deficiencies. | This data element is applicable to facilities that use land application and/or an active surface disposal site (*e.g.,* monofills, surface impoundments, lagoons, waste piles, dedicated disposal sites, and dedicated beneficial use sites). This data element uses one or more unique codes/descriptions to identify all deficiencies in the biosolids or sewage sludge program within the reporting period. For example, this data element uses a unique code/description to identify when a biosolids or sewage sludge pollutant concentration exceed a ceiling concentration (*e.g.,* Table 1 of 40 CFR 503.13 for facilities utilizing land application). This data element also uses a unique code/description to identify when the facility failed to properly collect and analyze its biosolids or sewage sludge in accordance with the approved analytical methods (including appropriate method holding times). This data element also uses a unique code/description to identify deficiencies with pathogen reduction and/or vector attraction reduction. For facilities that use an active surface disposal site this data element will use a unique code/description to identify any deficiencies in meeting the applicable surface disposal requirements [see 40 CFR 503.24(a) through (n)]. | 503.18, 503.28 ..... | 4. |

TABLE 2—REQUIRED NPDES PROGRAM DATA—Continued

| Data name | Data description | CWA, regulatory (40 CFR), or other citation | NPDES data group No. (*see* Table 1) |
|---|---|---|---|
| **Compliance Monitoring Activity Information (Data Elements Specific to CAFO Annual Program Reports)** | | | |
| CAFO Animal Types (Program Report). | The unique code/description that identifies the permittee's applicable animal sector(s) in the previous 12 months. This includes (but not limited to) beef cattle, broilers, layers, swine weighing 55 pounds or more, swine weighing less than 55 pounds, mature dairy cows, dairy heifers, veal calves, sheep and lambs, horses, ducks, and turkeys. | 122.42(e)(4)(i) | 5. |
| CAFO Animal Maximum Number (Program Report). | The estimated maximum number of each type of animal in open confinement or housed under roof (either partially or totally) which are held at the facility for a total of 45 days or more in the previous 12 months. | 122.42(e)(4)(i) | 5. |
| CAFO Animal Maximum Number in Open Confinement (Program Report). | The estimated maximum number of each type of animal in open confinement which are held at the facility for a total of 45 days or more in the previous 12 months. | 122.42(e)(4)(i) | 5. |
| CAFO MLPW (Program Report). | The unique code/description that identifies the type of CAFO manure, litter, and process wastewater generated by the facility *i.e.* in the previous 12 months. | 122.42(e)(4)(ii) | 5. |
| CAFO MLPW Amounts (Program Report). | The estimated total amount of CAFO manure, litter, and process wastewater generated by the facility in the previous 12 months. | 122.42(e)(4)(ii) | 5. |
| CAFO MLPW Amounts Units (Program Report). | The unit (*e.g.,* tons, gallons) for the estimated total amount of CAFO manure, litter, and process wastewater generated by the facility *i.e.*in the previous 12 months. | 122.42(e)(4)(ii) | 5. |
| CAFO MLPW Transferred (Program Report). | The estimated total amount of CAFO manure, litter, and process wastewater generated by the facility *i.e.* in the previous 12 months that is transferred to other persons. The units for this data element will be the same as the units for the "CAFO MLPW Amounts (Program Report)" data element. | 122.42(e)(4)(iii) | 5. |
| Total Number of Acres for Land Application Covered by the Nutrient Management Plan (Program Report). | Total number of acres for land application covered by the current nutrient management plan. | 122.42(e)(4)(iv) | 5. |
| Total Number of Acres Used for Land Application (Program Report). | The total number of acres under control of the CAFO and used for land application in the previous 12 months. | 122.42(e)(4)(v) | 5. |
| Discharge Type (Program Report). | The unique code/description that identifies for each discharge from the permittee's production area in the previous 12 month whether a 25-year, 24-hour rainfall event was the cause for the discharge. These data are optional if permittee uses a Discharge Monitoring Report (DMR) to provide the permitting authority with information on their discharges. | 122.42(e)(4)(vi), 412 | 5. |
| Discovery Dates of Discharges from Production Area (Program Report). | The date of each discharge from the permittee's production area in the previous 12 months. The date must be provided in YYYY–MM–DD format where YYYY is the year, MM is the month, and DD is the day. These data are optional if permittee uses a Discharge Monitoring Report (DMR) to provide the permitting authority with information on their discharges. | 122.42(e)(4)(vi) | 5. |
| Duration of Discharges from Production Area (Program Report). | The estimated duration time (in hours) of each discharge from the permittee's production area in the previous 12 months. These data are optional if permittee uses a Discharge Monitoring Report (DMR) to provide the permitting authority with information on their discharges. | 122.42(e)(4)(vi) | 5. |

TABLE 2—REQUIRED NPDES PROGRAM DATA—Continued

| Data name | Data description | CWA, regulatory (40 CFR), or other citation | NPDES data group No. (*see* Table 1) |
|---|---|---|---|
| Approximate Volume of Discharge from Production Area (Program Report). | The approximate volume (in gallons) of each discharge from the permittee's production area in the previous 12 months. These data are optional if permittee uses a Discharge Monitoring Report (DMR) to provide the permitting authority with information on their discharges. | 122.42(e)(4)(vi) | 5. |
| Whether NMP Approved or Developed by Certified Planner (Program Report). | The unique code/description that identifies whether the current version of the NMP was approved or developed by a certified nutrient management planner. | 122.42(e)(4)(vii) | 5. |
| CAFO MLPW Nitrogen Content (Program Report). | The nitrogen content of CAFO manure, litter, and process wastewater used or generated by the facility *i.e.* in the previous 12 months. | 122.42(e)(4)(viii) | 5. |
| CAFO MLPW Phosphorus Content (Program Report). | The phosphorus content of CAFO manure, litter, and process wastewater used or generated by the facility *i.e.* in the previous 12 months. | 122.42(e)(4)(viii) | 5. |
| CAFO MLPW Nitrogen or Phosphorus Units (Program Report). | The unit(s) (*e.g.,* lbs/tons, lbs/1,000-gallons) for the nitrogen and phosphorus content of CAFO manure, litter, and process wastewater used or generated by the facility *i.e.* in the previous 12 months. | 122.42(e)(4)(viii) | 5. |
| CAFO MLPW Nitrogen or Phosphorus Form (Program Report). | The form (*e.g.,* total nitrogen, ammonium-nitrogen, total phosphorus) for the nitrogen and phosphorus content of CAFO manure, litter, and process wastewater used or generated by the facility *i.e.*in the previous 12 months. | 122.42(e)(4)(viii) | 5. |
| Field Identification Number (Program Report). | A unique field number to which CAFO MLPW was applied in the previous 12 months. This data element will be used when the term ''for each field'' is used in the CAFO Annual Program Report. | 122.42(e)(4)(viii) | 5. |
| Actual Crop(s) Planted for Each Field (Program Report). | Actual crop(s) planted for each field | 122.42(e)(4)(viii) | 5. |
| Actual Crop Yield(s) for Each Field (Program Report). | Actual crop yield(s) for each field | 122.42(e)(4)(viii) | 5. |
| Actual Crop Yield(s) for Each Field Units (Program Report). | The unit(s) for the actual crop yield(s) for each field (*e.g.,* bushels per acre). | 122.42(e)(4)(viii) | 5. |
| Method for Calculating Maximum Amounts of Manure, Litter, and Process Wastewater (Program Report). | The unique code/description that identifies whether the CAFO used the Linear Approach [40 CFR 122.42(e)(5)(i)] or the Narrative Rate Approach [40 CFR 122.42(e)(5)(ii)]. | 122.42(e)(4)(viii) | 5. |
| CAFO MLPW Land Application For Each Field (Program Report). | The unique code/description that identifies for each field the type of CAFO manure, litter, and process wastewater *i.e.* in the previous 12 months and used for land application. | 122.42(e)(4)(viii) | 5. |
| CAFO MLPW Land Application Maximum Amount For Each Field (Program Report). | The maximum amount of CAFO manure, litter, and process wastewater for each field in the previous 12 months and used for land application. The maximum amounts of CAFO manure, litter, and process wastewater is calculated in accordance with procedures in the Linear Approach [40 CFR 122.42(e)(5)(i)(B)] or the Narrative Rate Approach [40 CFR 122.42(e)(5)(ii)(D)]. | 122.42(e)(4)(viii) | 5. |
| CAFO MLPW Land Application Actual Amount For Each Field (Program Report). | The actual amount of CAFO manure, litter, and process wastewater for each field in the previous 12 months and used for land application. | 122.42(e)(4)(viii) | 5. |
| CAFO MLPW Land Application For Each Field Unit (Program Report). | The unit (*e.g.,* tons, gallons) for the maximum and actual amount of CAFO manure, litter, and process wastewater for each field in the previous 12 months and used for land application. | 122.42(e)(4)(viii) | 5. |
| Nitrogen Soil Test Measurement (Narrative Rate Approach) (Program Report). | For each field used for land application, the results of the most recent soil nitrogen analysis for any soil test taken in the preceding 12 months (*i.e.,* amount of nitrogen in the soil). This data element is only applicable to facilities using the Narrative Rate Approach as described in 40 CFR 122.42(e)(5)(ii). | 122.42(e)(4)(viii) | 5. |

TABLE 2—REQUIRED NPDES PROGRAM DATA—Continued

| Data name | Data description | CWA, regulatory (40 CFR), or other citation | NPDES data group No. (*see* Table 1) |
|---|---|---|---|
| Phosphorus Soil Test Measurement (Narrative Rate Approach) (Program Report). | For each field used for land application, the results of the most recent soil phosphorus analysis for any soil test taken in the preceding 12 months (*i.e.,* amount of phosphorus in the soil). This data element is only applicable to facilities using the Narrative Rate Approach as described in 40 CFR 122.42(e)(5)(ii). | 122.42(e)(4)(viii) | 5. |
| Soil Test Measurement Form (Narrative Rate Approach) (Program Report). | The form (*e.g.,* total nitrogen, ammonium-nitrogen, total phosphorus) for each soil test measurement. This data element is only applicable to facilities using the Narrative Rate Approach as described in 40 CFR 122.42(e)(5)(ii). | 122.42(e)(4)(viii) | 5. |
| Soil Test Measurement Unit(s) (Narrative Rate Approach) (Program Report). | The unit(s) for the amounts of nitrogen and/or phosphorus for any soil test results. This data element is only applicable to facilities using the Narrative Rate Approach, as described in 40 CFR 122.42(e)(5)(ii). | 122.42(e)(4)(viii) | 5. |
| Nitrogen Amount of Any Supplemental Fertilizer Applied (Program Report). | For each field used for land application, provide the amount of nitrogen in supplemental fertilizer applied in the previous 12 months. This data element is only applicable to facilities using the Narrative Rate Approach as described in 40 CFR 122.42(e)(5)(ii). | 122.42(e)(4)(viii) | 5. |
| Phosphorus Amount of Any Supplemental Fertilizer Applied (Program Report). | For each field used for land application, provide the amount of phosphorus in supplemental fertilizer applied in the previous 12 months. This data element is only applicable to facilities that are using the Narrative Rate Approach as described in 40 CFR 122.42(e)(5)(ii). | 122.42(e)(4)(viii) | 5. |
| Supplemental Fertilizer Applied Units (Program Report). | The unit(s) for the amount(s) of nitrogen and/or phosphorus in any supplemental fertilizer applied in the previous 12 months (*e.g.,* ppm, pounds per acre). This data element is only applicable to facilities using the Narrative Rate Approach, as described in 40 CFR 122.42(e)(5)(ii). | 122.42(e)(4)(viii) | 5. |
| **Compliance Monitoring Activity Information (Data Elements Specific to Municipal Separate Storm Sewer System Program Reports)** [**Note:** The MS4 permit may require one report for each unique governmental entity or one report per permit]. | | | |
| MS4 Reliance on Other Government Entities Status. | This is a unique code (*e.g.,* ''Yes'', ''No'') that identifies whether the permittee relies on another unique governmental entity to satisfy any of the permit requirements. | 122.26(d)(2)(vii), 122.34(g)(3)(v) | 6. |
| MS4 Reliance on Other Government Entities: Permit Component Status. | For each MS4 permit component this data element identifies the responsible government entity. This data element uses the 'Unique Identifier for Each Municipality Covered Under MS4 Permit' data element. Use of this identifier allows for greater geographic resolution for the MS4 components being tracked. This unique identifier does not change over time. The number identifies the entity taking responsibility for complying with each MS4 permit component. | 122.34(g)(3)(i) and (v), 122.35(a) and 122.42(c). | 6. |
| MS4 Permit Components Descriptions and Measurable Goals. | The one or more codes/descriptions that identify for each unique municipality all of the permitted components and measurable goals that are included in the MS4 permit. For Phase II MS4s, these components will be pre-populated from the BMPs each Phase II MS4 permittee indicated it will implement in its NOI or permit application. The groupings of these MS4 components will include public education and outreach on stormwater impacts; public involvement/participation; illicit discharge detection and elimination; construction site stormwater runoff; post-construction stormwater management in new development and redevelopment; and pollution prevention/good housekeeping for municipal operations. | 122.34(g)(3) and 122.42(c) | 6. |

TABLE 2—REQUIRED NPDES PROGRAM DATA—Continued

| Data name | Data description | CWA, regulatory (40 CFR), or other citation | NPDES data group No. (*see* Table 1) |
|---|---|---|---|
| Changes to MS4 Permit Components and Measurable Goals. | The one or more codes/descriptions that describe for each unique municipality any changes made to MS4 permit components (*e.g.,* BMPs) during the reporting period. | 122.34(g)(3)(iv) and 122.42(c) | 6. |
| Status of Compliance with each Minimum Control Measure. | The unique code (*e.g.,* ''Yes'', ''No'') that identifies if the permittee has completed each measureable goal associated with each MS4 permit component. | 122.34(g)(3) and 122.42(c) .... | 6. |
| Progress and Summary of Results with Each Minimum Control Measure. | This is a text summary describing the permittee's compliance and progress toward meeting each measurable goal including a summary of results for each unique municipality. | 122.34(g)(3) and 122.42(c) .... | 6. |
| MS4 Enforcement Action Type | For each unique municipality covered under a Phase I MS4 permit, this data element identifies the one or more types of enforcement actions taken during the past reporting period (*e.g.,* notice of violations, stop work orders, administration orders, administrative fines, civil penalties, criminal actions). The unique municipality covered under the MS4 permit will identify ''No Authority'' for this data element if the municipality does not have the authority to conduct enforcement actions. This data element is optional for Phase II MS4s. | 122.34(g)(3) and 122.42(c) .... | 6. |
| MS4 Enforcement Action Number. | For each unique municipality covered under a Phase II MS4 permit and for each MS4 Enforcement Action Type, this data element identifies the number of enforcement actions taken by responsible MS4 Municipal Enforcement Agency. The unique municipality covered under the MS4 permit will identify ''No Authority'' for this data element if the municipality does not have the authority to conduct enforcement actions. For Phase II MS4s this data element will be the total number of enforcement actions taken during the reporting period. | 122.34(g)(3) and 122.42(c) .... | 6. |
| MS4 Municipality Enforcement Agency. | For each unique municipality covered under the MS4 permit and for each MS4 Enforcement Action Type, this data element identifies the corresponding MS4 Municipal Enforcement Agency by its unique municipality number (''Unique Identifier for Each Municipality Covered Under MS4 Permit''). This data element is only required for permittees that have co-permittees under their unique MS4 permit. | 122.34(g)(3) and 122.42(c) .... | 6. |

TABLE 2—REQUIRED NPDES PROGRAM DATA—Continued

| Data name | Data description | CWA, regulatory (40 CFR), or other citation | NPDES data group No. (*see* Table 1) |
|---|---|---|---|
| MS4 Industrial Stormwater Control. | The one or more unique codes/descriptions that identify how the MS4 permittee will comply with industrial stormwater control requirements, including (at a minimum): (1) Status of the ordinance or other regulatory mechanism to control the contribution of pollutants by stormwater discharges associated with industrial activity, including authority to carry out all inspection, surveillance and monitoring procedures necessary to determine compliance and noncompliance, and including sanctions to ensure compliance; (2) status of the MS4 permittee industrial stormwater inventory, which identifies facilities with industrial activities and assesses the quality of the stormwater discharged from each facility with an industrial activity; (3) status of program to monitor and control pollutants in stormwater discharges from municipal landfills, hazardous waste treatment, disposal and recovery facilities, industrial facilities that are subject to Toxics Release Inventory (TRI) reporting requirements (Emergency Planning and Community Right-To-Know Act Section 313), and industrial facilities that are contributing a substantial pollutant loading to the MS4; and (4) status of monitoring program for discharges associated with industrial facilities. This data element is optional for Phase II MS4s. | 40 CFR 122.26(d)(2)(i)(A, B, C, E, and F) and 40 CFR 122.26(d)(2)(ii) and (iv)(A)(5) and (iv)(C), 122.42(c). | 6. |
| **Compliance Monitoring Activity Information (Data Elements Specific to Pretreatment Program Reports, SIU Periodic Compliance Reports in Municipalities without an Approved Pretreatment Program)** | | | |
| [**Note:** These data elements do not apply to the development, evaluation, or compliance monitoring activities supporting wastewater surcharge rates.] | | | |
| SNC Published | A unique code (*e.g.,* ''Yes'', ''No'') that identifies for each Significant Industrial User (SIU) and Non-Significant Categorical Industrial Users (NSCIU) in SNC whether the Control Authority published a public notice within the reporting period. | 403.8(f)(2)(viii), 403.12(i)(2) | 7. |
| SNC with Pretreatment Enforceable Compliance Schedule Status. | The unique code/description that identifies for each Significant Industrial User (SIU) and Non-Significant Categorical Industrial User (NSCIU) in SNC whether the industrial user in SNC is subject to one or more enforceable compliance schedules within the reporting period. | 403.8(f)(2)(viii), 403.12(i)(2) | 7. |
| Local Limits Adoption Date | This is the most recent date on which the Control Authority adopted new local limits within the reporting period. The date must be provided in YYYY–MM–DD format where YYYY is the year, MM is the month, and DD is the day. The Control Authority can leave this data element blank on the Pretreatment Program Report if the Control Authority did not adopt any new local limits within the reporting period. | 122.44(j)(2)(ii), 403.5(c), 403.8(f)(4) and (5), 403.12(i)(4). | 7. |
| Local Limits Evaluation Date | This is the most recent date on which the Control Authority completed an evaluation on the potential need for local limits within the reporting period. The date must be provided in YYYY–MM–DD format where YYYY is the year, MM is the month, and DD is the day. The Control Authority can leave this data element blank on the Pretreatment Program Report if the Control Authority did not evaluate any local limits within the reporting period. | 122.44(j)(2)(ii), 403.5(c), 403.8(f)(4) and (5), 403.12(i)(4), 403.8(f)(4). | 7. |

TABLE 2—REQUIRED NPDES PROGRAM DATA—Continued

| Data name | Data description | CWA, regulatory (40 CFR), or other citation | NPDES data group No. (*see* Table 1) |
|---|---|---|---|
| Local Limits Pollutants | This is the list of the pollutants for which the Control Authority adopted local limits. The Control Authority will only need to enter each pollutant once no matter how many treatment works are managed by the Control Authority. The Control Authority can leave this data element blank on the Pretreatment Program Reports if the Control Authority did not change the pollutants for which the Control Authority derived local limits. | 403.5(c), 403.12(i)(4) | 7. |
| POTW Discharge Contamination Indicator (Program Report). | The one or more unique codes/descriptions that identify any problems (*e.g.,* pass-through, interference, violation of NPDES permit limits) with the receiving POTW's effluent discharge within the reporting period. See 40 CFR 403.3(k) and (p). EPA regulations require the Control Authority to develop and enforce local limits when the discharge from an IU causes or contributes to any problems at the receiving POTW. | 403.8(f), 403.12(i) | 7. |
| POTW Biosolids or Sewage Sludge Contamination Indicator (Program Report). | The one or more unique codes/descriptions that identify any problems (*e.g.,* interference with the use or disposal of biosolids or sewage sludge, violation of NPDES permit requirements or EPA's regulations at 40 CFR part 503) with the receiving POTW's biosolids or sewage sludge within the reporting period. See 40 CFR 403.3(k). EPA regulations require any Control Authority that must develop a Pretreatment Program also to develop and enforce local limits to ensure that the discharge from an IU does not cause or contribute a disruption of biosolids' use or disposal at the receiving POTW. | 403.8(f), 403.12(i) | 7. |
| Industrial User Control Mechanism Status. | A unique code/description that identifies whether the Industrial User is subject to an effective Control Mechanism within the reporting period. | 403.3(k), 403.5(c), 403.8(f), 403.12(i). | 7. |
| Industrial User Control Mechanism Effective Date. | The date when the active Control Mechanism for the Industrial User became effective. The date must be provided in YYYY–MM–DD format where YYYY is the year, MM is the month, and DD is the day. | 403.8(f)(1)(iii)(B)(1), 403.12(i) | 7. |
| Industrial User Control Mechanism Expiration Date. | The date when the active Control Mechanism for the Industrial User will expire. The date must be provided in YYYY–MM–DD format where YYYY is the year, MM is the month, and DD is the day. | 403.8(f), 403.12(i) | 7. |
| SNC With Pretreatment Standards or Limits (Program Report). | This data element will identify for each Significant Industrial User (SIU) and Non-Significant Categorical Industrial User (NSCIU) whether the IU was in Significant Non-Compliance (SNC) with any pretreatment standard or local limits applicable to the industrial user's discharge within the reporting period. | 403.8(f), 403.12(i) | 7. |
| SNC With Pretreatment Standards or Limits Pollutants (Program Report). | This data element will identify for each Significant Industrial User (SIU) and Non-Significant Categorical Industrial User (NSCIU) the pollutants that related to the industrial user's Significant Non-Compliance (SNC) status with any applicable pretreatment standard or local limits within the reporting period. | 403.8(f), 403.12(i) | 7. |
| SNC With Reporting Requirements (Program Report). | This data element will identify for each Significant Industrial User (SIU) and Non-Significant Categorical Industrial User (NSCIU) whether the IU was in Significant Non-Compliance (SNC) with reporting requirements (including baseline monitoring reports, notice of potential problems, periodic self-monitoring reports, notice of change in Industrial User discharge, hazardous waste notification and BMP certification) within the reporting period. | 123.26, 123.41(a), 123.45, 403.8(f), 403.10, 403.12(i). | 1, 7. |

TABLE 2—REQUIRED NPDES PROGRAM DATA—Continued

| Data name | Data description | CWA, regulatory (40 CFR), or other citation | NPDES data group No. (*see* Table 1) |
|---|---|---|---|
| SNC with Other Control Mechanism Requirements (Program Report). | This data element will identify for each Significant Industrial User (SIU) and Non-Significant Categorical Industrial User (NSCIU) whether the IU was in Significant Non-Compliance (SNC) with any other control mechanism requirements within the reporting period. This data element does not include instances of SNC that relate to the industrial user's applicable discharge standards or local limits or reporting requirements. | 123.26, 123.41(a), 123.45, 403.8(f), 403.10, 403.12(i). | 1, 7. |
| Listing of Months in SNC ..... | This data element will identify for each Significant Industrial User (SIU) and Non-Significant Categorical Industrial User (NSCIU) the month or months the IU is in SNC within the reporting period. These data must be provided in YYYY–MM format where YYYY is the year and MM is the month. | 123.26, 123.41(a), 123.45, 403.8(f), 403.10, 403.12(i). | 1, 7. |
| Number of Industrial User Inspections by Control Authority. | This data element will identify for each Significant Industrial User (SIU) the number of inspections conducted by the Control Authority within the reporting period. | 403.8(f), 403.12(i) ..... | 7. |
| Number of Industrial User Sampling Events by Control Authority. | This data element will identify for each Significant Industrial User (SIU) the number of complete sampling events conducted by the Control Authority within the reporting period. | 403.8(f), 403.12(i) ..... | 7. |
| Number of Required Industrial User Self-Monitoring Events. | This data element will identify for each Significant Industrial User (SIU) the number of required self-monitoring sampling events within the reporting period that must be reported to the Control Authority. | 403.8(f), 403.12(i) ..... | 7. |
| Actual Number of Industrial User Self-Monitoring Events. | This data element will identify for each Significant Industrial User (SIU) the actual number of self-monitoring sampling events within the reporting period submitted to the Control Authority. | 403.8(f), 403.12(i) ..... | 7. |
| Types of Industrial User Enforcement Action. | This data element will identify for each Significant Industrial User (SIU) the type(s) of formal enforcement action(s) (*e.g.,* formal notices of violation or equivalent actions, administrative orders, civil suits, criminal suits) issued by the Control Authority within the reporting period. The Control Authority can also optionally use this data element to track informal actions that they issued within the reporting period. | 403.8(f), 403.12(i) ..... | 7. |
| Number of Industrial User Enforcement Actions. | This data element will identify for each Significant Industrial User (SIU) and for each type of enforcement action the total number of formal enforcement actions issued by the Control Authority within the reporting period. The Control Authority can also optionally use this data element to track informal actions that they issued within the reporting period. | 403.8(f), 403.12(i) ..... | 7. |
| Industrial User Cash Civil Penalty Amount Assessed. | For civil judicial Enforcement Actions, the dollar amount of the penalty assessed against each Significant Industrial User (SIU) and Non-Significant Categorical Industrial User (NSCIU) within the reporting period as specified in the final entered Consent Decree or Court Order. For Administrative Enforcement Actions, it is the dollar amount of the penalty assessed in the Consent/Final Order. | CWA section 309 ..... | 7. |
| Industrial User Cash Civil Penalty Amount Collected. | For civil judicial Enforcement Actions, the dollar amount of the penalty collected from each Significant Industrial User (SIU) and Non-Significant Categorical Industrial User (NSCIU) within the reporting period. For Administrative Enforcement Actions, it is the dollar amount collected of the penalty assessed in the Consent/Final Order. | CWA section 309 ..... | 7. |

TABLE 2—REQUIRED NPDES PROGRAM DATA—Continued

| Data name | Data description | CWA, regulatory (40 CFR), or other citation | NPDES data group No. (*see* Table 1) |
|---|---|---|---|
| Industrial User POTW Discharge Contamination Indicator (Program Report). | The one or more unique codes/descriptions that identify for each Significant Industrial User (SIU) and Non-Significant Categorical Industrial User (NSCIU) whether the Industrial User caused or contributed to any problems (*e.g.,* pass-through, interference, violation of NPDES permit limits) with the receiving POTW's effluent discharge in the previous reporting period. See 40 CFR 403.3(k) and (p). EPA regulations require the Control Authority to develop and enforce local limits when the discharge from an IU causes or contributes to any problems *e.g.*at the receiving POTW. | 123.26, 123.41(a), 123.45, 403.5(c), 403.8(f), 403.10, 403.12(i). | 1, 7. |
| Industrial User Biosolids or Sewage Sludge Contamination Indicator (Program Report). | The one or more unique codes/descriptions that identify for each Significant Industrial User (SIU) and Non-Significant Categorical Industrial User (NSCIU) whether the Industrial User caused or contributed to any problems (*e.g.,* interference with the use or disposal of biosolids or sewage sludge, violation of NPDES permit requirements or EPA's regulations at 40 CFR part 503) with the receiving POTW's biosolids or sewage sludge in the previous reporting period. See 40 CFR 403.3(k). EPA regulations require the Control Authority to develop and enforce local limits when the discharge from an IU causes or contributes to any problems *e.g.*at the receiving POTW. | 123.26, 123.41(a), 123.45, 403.5(c), 403.8(f), 403.10, 403.12(i). | 1, 7. |
| Industrial User Wastewater Flow Rate (Program Report). | This data element will identify for each Significant Industrial User (SIU) and Non-Significant Categorical Industrial User (NSCIU) the maximum monthly average wastewater flow rate (in gallons per day) in the previous reporting period. | 403.8(f), 403.12(e), 403.12(h), 403.12(i). | 7, 8. |
| Middle-Tier Significant Industrial User Reduced Reporting Status. | The unique code/description that identifies for each Middle-Tier Significant Industrial User (MTSIU) whether the Control Authority has granted reduced reporting requirements in accordance with 40 CFR 403.12(e)(3). | 123.26, 123.41(a), 123.45, 403.10, 403.12(e)(3), 403.12(i)(2). | 1, 7. |
| Non-Significant Categorical Industrial User (NSCIU) Certification Submitted to Control Authority. | The unique code/description that identifies for each Non-Significant Categorical Industrial User (NSCIU) whether the facility has reported its required annual compliance certification to the Control Authority within the reporting period. | 123.26, 123.41(a), 123.45, 403.10, 403.12(i)(2), 403.12(q). | 1, 7. |
| Notification of Changed Discharge Submission. | The unique code (*e.g.,* "Yes", "No") that identifies for each Significant Industrial User (SIU) and Non-Significant Categorical Industrial User (NSCIU) whether the Industrial User submitted a notification within the reporting period to the Control Authority of a substantial change in the volume or character of pollutants in their discharge, including the listing or characteristic hazardous wastes for which the Industrial User previously submitted notice. | 403.8(f), 403.12 (i), 403.12(j) | 1, 7. |

**Compliance Monitoring Activity Information (Data Elements Specific to Sewer Overflow/Bypass Event Reports)**

[**Note:** These data elements apply to sewer overflows and bypass events at POTWs. These data elements do not apply to industrial facilities. This report uses the 'Permitted Feature Identifier (Compliance Monitoring Activity)' data element to identify the location of each sewer overflow or bypass at a permitted feature. Each bypass location should be permitted and have an identifier in the 'Permitted Feature Identifier (Permit)' data element. This report will also identify the location of each sewer overflow at an unpermitted feature.]

TABLE 2—REQUIRED NPDES PROGRAM DATA—Continued

| Data name | Data description | CWA, regulatory (40 CFR), or other citation | NPDES data group No. (*see* Table 1) |
|---|---|---|---|
| Sewer Overflow/Bypass Identifier. | This data element will allow the reporting of multiple sewer overflows or bypasses on one report. Each individualized sewer overflow or bypass will be given a unique identifier (*e.g.,* 1, 2, 3, and so on) for each Sewer Overflow/Bypass Event Report. This field can be system generated to accommodate one or more individual sewer overflows or bypasses. If the sewer overflows are caused by an extreme weather event (*e.g.,* hurricane) that floods the entire sewer system the POTW can use this data element to indicate that the number of sewer overflows cannot be tabulated as they are too numerous to count. | 122.41(l)(4), (6), and (7) and 122.41(m)(3). | 3, 9. |
| Sewer Overflow Longitude for Unpermitted Feature (Sewer Overflow/Bypass Event Report). | This data element is required for each Sewer Overflow/Bypass Identifier without a corresponding identifier in the 'Permitted Feature Identifier (Permit)' data element, which is reported on the NPDES permit application or Notice of Intent for NPDES permit coverage. This data element is the measure of the angular distance on a meridian east or west of the prime meridian for the sewer overflow location. The format for this data element is decimal degrees (*e.g.,* −77.029289) and the WGS84 standard coordinate system. The 'Permitted Feature Identifier (Compliance Monitoring Activity)' data element is used to identify the location of each sewer overflow at a permitted feature. If the sewer overflow is associated with a private residence the longitude of the nearest collection system structure (*e.g.,* manhole) can be used for this data element to the extent that reporting is required. The POTW can leave this data element blank on the Sewer Overflow/Bypass Event Report if the sewer overflows are caused by an extreme weather event (*e.g.,* hurricane) that floods the entire sewer system and are too numerous to count. This data element can also be system generated if the Sewer Overflow/Bypass Event Report collects the street location of the sewer overflow and the street location can be used to generate an accurate longitude value. (Note: ''Post Office Box'' addresses and ''Rural Route'' addresses are generally not geocodable). | 122.41(l)(4), (6), and (7) ..... | 3, 9. |

TABLE 2—REQUIRED NPDES PROGRAM DATA—Continued

| Data name | Data description | CWA, regulatory (40 CFR), or other citation | NPDES data group No. (*see* Table 1) |
|---|---|---|---|
| Sewer Overflow Latitude for Unpermitted Feature (Sewer Overflow/Bypass Event Report). | This data element is required for each Sewer Overflow/Bypass Identifier without a corresponding identifier in the 'Permitted Feature Identifier (Permit)' data element, which is reported on the NPDES permit application or Notice of Intent for NPDES permit coverage. This data element is the measure of the angular distance on a meridian north or south of the equator for the sewer overflow location. The format for this data element is decimal degrees (*e.g.,* -77.029289) and the WGS84 standard coordinate system. The Permitted Feature Identifier (Compliance Monitoring Activity) data element is used to identify the location of each sewer overflow at a permitted feature. If the sewer overflow is associated with a private residence the latitude of the nearest collection system structure (*e.g.,* manhole) can be used for this data element to the extent that reporting is required. The POTW can leave this data element blank on the Sewer Overflow/Bypass Event Report if the sewer overflows are caused by an extreme weather event (e.g., hurricane) that floods the entire sewer system and are too numerous to count. This data element can also be system generated if the Sewer Overflow/Bypass Event Report collects the street location of the sewer overflow and the street location can be used to generate an accurate longitude value. (Note: "Post Office Box" addresses and "Rural Route" addresses are generally not geocodable). | 122.41(l)(4), (6), and (7) ..... | 3, 9. |
| Type of Sewer Overflow/Bypass (Sewer Overflow/Bypass Event Report). | A unique code/description that identifies the type of sewer overflow or bypass (e.g., CSO or SSO from the POTW's collection system, anticipated bypass from the treatment works, unanticipated bypass from the treatment works) for each Sewer Overflow/Bypass Identifier. For bypass events the permittee will also use this data element to identify if any NPDES effluent limitations were violated as a result of the bypass. | 122.41(l)(4), (6), and (7) and 122.41(m)(3). | 3, 9. |
| Type of Sewer Overflow/Bypass Structure. | A unique code/description that identifies the type of sewer overflow or bypass structure (*e.g.,* manhole, CSO outfall) for each Sewer Overflow/Bypass Identifier. The POTW can leave this data element blank on the Sewer Overflow/Bypass Event Report if the sewer overflows are caused by an extreme weather event (e.g., hurricane) that floods the entire sewer system and are too numerous to count. | 122.41(l)(4), (6), and (7) and 122.41(m)(3). | 3, 9. |
| Sewer Overflow/Bypass Cause | The one or more unique codes/descriptions that best represent the likely cause of the sewer overflow or bypass (*e.g.,* broken pipe, fats/oil/grease, mechanical failure, pump station electrical failure, wet weather, vandalism) for each Sewer Overflow/Bypass Identifier.. | 122.41(l)(4), (6), and (7) and 122.41(m)(3). | 3, 9 |
| Duration of Sewer Overflow/Bypass (hours) (Sewer Overflow/Bypass Event Report). | Estimated duration of the sewer overflow or bypass (in hours) for each Sewer Overflow/Bypass Identifier. If the discharge has not been corrected, this is the best professional judgment from the sewer owner or in the case of a bypass, the treatment plant owner, of the time the sewer overflow or bypass is expected to continue. The POTW can leave this data element blank on the Sewer Overflow/Bypass Event Report if the sewer overflows are caused by an extreme weather event (e.g., hurricane) that floods the entire sewer system and are too numerous to count. | 122.41(l)(4), (6), and (7) and 122.41(m)(3). | 3, 9. |

TABLE 2—REQUIRED NPDES PROGRAM DATA—Continued

| Data name | Data description | CWA, regulatory (40 CFR), or other citation | NPDES data group No. (*see* Table 1) |
|---|---|---|---|
| Sewer Overflow/Bypass Discharge Volume (gallons) (Sewer Overflow/Bypass Event Report). | Best professional judgment from the sewer owner on the estimated number of gallons of sewer overflow or bypass for each Sewer Overflow/Bypass Identifier. If the discharge has not been corrected, this is the best professional judgment from the sewer owner or in the case of a bypass, the treatment plant owner, of the volume of overflow or bypass prior to cessation. The POTW can leave this data element blank on the Sewer Overflow/Bypass Event Report if the sewer overflows are caused by an extreme weather event (e.g., hurricane) that floods the entire sewer system and are too numerous to count. | 122.41(l)(4), (6), and (7) and 122.41(m)(3). | 3, 9. |
| Receiving Waterbody Name for Unpermitted Feature (Sewer Overflow/Bypass Event Report). | This data element identifies the receiving waterbody name for each Sewer Overflow/Bypass Identifier that does not have a corresponding value in the 'Permitted Feature Identifier (Permit)' data element. This data element will use the best professional judgment of the sewer owner to identify the name of the waterbody that is or will likely receive the discharge from each Sewer Overflow/Bypass Identifier. The POTW can leave this data element blank on the Sewer Overflow/Bypass Event Report if the sewer overflows are caused by an extreme weather event (e.g., hurricane) that floods the entire sewer system and are too numerous to count. | 122.41(l)(4), (6), and (7) ..... | 3, 9. |
| Wet Weather Occurrence for Sewer Overflow/Bypass Status. | The unique code (*e.g.,* ''Yes'', ''No'') that represents the best professional judgment of the sewer owner, or in the case of a bypass, the treatment plant owner, regarding whether the sewer overflow or bypass, by Sewer Overflow/Bypass Identifier, occurred during wet weather. | 122.41(l)(4), (6), and (7) and 122.41(m)(3). | 3, 9. |
| Corrective Actions Taken or Planned for Sewer Overflow/Bypass (Sewer Overflow/Bypass Event Report). | The unique code/description that describes the steps taken or planned to reduce, eliminate, and prevent reoccurrence of future sewer overflows or bypasses for each Sewer Overflow/Bypass Identifier and the related impacts to health and the environment. This data element can be used to identify the portion of the sewer overflow or bypass that was contained and recovered prior to any discharge to waters of the U.S. This data element will also identify if any monitoring of the receiving waterbody was done during and/or after the sewer overflow or bypass to gauge the potential impact to health and the environment. The POTW can leave this data element blank on the Sewer Overflow/Bypass Event Report if the sewer overflows are caused by an extreme weather event (e.g., hurricane) that floods the entire sewer system and are too numerous to count. | 122.41(l)(4), (6), and (7) and 122.41(m)(3). | 3, 9. |
| Type of Potential Impact of Sewer Overflow/Bypass (Sewer Overflow/Bypass Event Report). | The unique code/description that describes the type of potential health or environmental impact(s) (*e.g.,* beach closure) for each Sewer Overflow/Bypass Identifier. Under 40 CFR 122.41(l)(6), ''the permittee shall report any noncompliance which may endanger health or the environment.'' This data element provides information regarding the nature of such potential endangerment. The POTW can leave this data element blank on the Sewer Overflow/Bypass Event Report if the sewer overflows are caused by an extreme weather event (e.g., hurricane) that floods the entire sewer system and are too numerous to count. | 122.41(l)(4), (6), and (7) and 122.41(m)(3). | 3, 9. |

TABLE 2—REQUIRED NPDES PROGRAM DATA—Continued

| Data name | Data description | CWA, regulatory (40 CFR), or other citation | NPDES data group No. (*see* Table 1) |
|---|---|---|---|
| **Compliance Monitoring Activity Information (Data Elements Specific to CWA section 316(b) Annual Reports)** | | | |
| [**Note:** Where the Director requires additional measures to protect Federally-listed threatened or endangered species or critical habitat pursuant to 40 CFR 125.94(g), the Director shall require reporting associated with those measures [see 40 CFR 125.97(g)]. The following data elements correspond to this reporting requirement. These data elements are only required for facilities that are required to report on their additional measures to protect Federally-listed threatened or endangered species or critical habitat.] | | | |
| CWA Section 316(b) Biological Monitoring—Species Name (Program Report). | For existing facilities, a listing of each Federally-listed threatened or endangered species (or relevant taxa) for all life stages that might be susceptible to impingement and entrainment at the facility's cooling water intake structure(s). Specific monitoring protocols and frequency of monitoring will be determined by the Director. | 125.96, 125.97(g), 125.98, 125.138(b), 401.14 and CWA section 316(b). | 10. |
| CWA Section 316(b) Biological Monitoring—Species Number (Program Report). | For existing facilities, the number of each Federally-listed threatened or endangered species (or relevant taxa) that might be susceptible to impingement and entrainment at the facility's cooling water intake structure(s). Specific monitoring protocols and frequency of monitoring will be determined by the Director. | 125.96, 125.97(g), 125.98, 125.138(b), 401.14 and CWA section 316(b). | 10. |
| CWA Section 316(b) Biological Monitoring—Threatened or Endangered Status (Program Report). | For existing facilities, a unique code/description that identifies for each Federally-listed threatened or endangered species (or relevant taxa) whether the species is threatened, endangered, or is an otherwise protected species that might be susceptible to impingement and entrainment at the facility's cooling water intake structure(s). Specific monitoring protocols and frequency of monitoring will be determined by the Director. | 125.96, 125.97(g), 125.98, 125.138(b), 401.14 and CWA section 316(b). | 10. |
| CWA Section 316(b) Biological Monitoring—Species Impinged and Entrained (Program Report). | For existing facilities, the number of each Federally-listed threatened or endangered species (or relevant taxa) impinged and entrained per year by the facility's cooling water intake structure(s). Specific monitoring protocols and frequency of monitoring will be determined by the Director. | 125.96, 125.97(g), 125.98, 125.138(b), 401.14 and CWA section 316(b). | 10. |
| CWA Section 316(b) Biological Monitoring—Applicable Measures to Protect Designated Critical Habitat (Program Report). | For existing facilities, a text summary of the measures taken by the permittee to protect designated critical habitat in the vicinity of impingement and entrainment at the facility's cooling water intake structure(s). | 125.96, 125.97(g), 125.98, 125.138(b), 401.14 and CWA section 316(b). | 10. |
| **Information Common to Violations, Enforcement Actions, and Final Orders** | | | |
| [**Note:** Single Event Violation (SEV) data elements are mandatory for construction stormwater inspections that identify CWA violations that result in a regulatory authority taking a formal enforcement action. SEV data elements are optional for other construction stormwater inspections.] | | | |
| Violation Code ..... | The unique code/description that identifies each type of violation that has occurred at the facility (*e.g.,* D80 = Required Monitoring DMR Value Non-Receipt, E90 = Effluent Violation, C20 = Schedule Event Achieved Late). This includes single event violations (SEVs) and violations that are system generated based upon DMRs, schedules, etc. | 123.45 and CWA section 309 | 1. |
| Violation Date ..... | This is the date of the violation, which varies depending on the type of violation. The date must be provided in YYYY–MM–DD format where YYYY is the year, MM is the month, and DD is the day. This data element may be system generated and does not apply to single event violation dates. | 123.45 and CWA section 309 | 1. |
| **Violation Information** | | | |
| Agency Identifying the Single Event Violation (SEV). | The unique code/description that identifies the agency that identified the single event violation (SEV). | 123.26, 123.41(a), 123.45 ..... | 1. |

TABLE 2—REQUIRED NPDES PROGRAM DATA—Continued

| Data name | Data description | CWA, regulatory (40 CFR), or other citation | NPDES data group No. (*see* Table 1) |
|---|---|---|---|
| Single Event Violation Start Date. | The date the single event violation (SEV) began. If the SEV occurred on one date, this data element is optional as this date can be system generated to equal "Single Event Violation End Date" when left blank. The date must be provided in YYYY–MM–DD format where YYYY is the year, MM is the month, and DD is the day. | 123.26, 123.41(a), 123.45 ..... | 1. |
| Single Event Violation End Date. | The date the single event violation (SEV) ended. This field will be left blank to denote an ongoing or unresolved SEV. The date must be provided in YYYY–MM–DD format where YYYY is the year, MM is the month, and DD is the day. | 123.26, 123.41(a), 123.45 ..... | 1. |
| RNC Detection Code ..... | The unique code/description that identifies the type of reportable noncompliance (RNC) detected by the regulatory authority. | 123.26, 123.41(a), 123.45 ..... | 1. |
| RNC Detection Date ..... | The date that reportable noncompliance (RNC) was detected. This date may vary according to the type of violation detected. The date must be provided in YYYY–MM–DD format where YYYY is the year, MM is the month, and DD is the day. | 123.26, 123.41(a), 123.45 ..... | 1. |
| RNC Resolution Code ..... | The unique code/description that identifies the reportable noncompliance (RNC) status (*e.g.,* noncompliant, resolved pending, waiting resolution, resolved) for each violation. This data element can be entered manually or system generated. | 123.26, 123.41(a), 123.45 ..... | 1. |
| RNC Resolution Date ..... | The date reportable noncompliance (RNC) was marked to its current resolution status. This data element is entered manually. The date must be provided in YYYY–MM–DD format where YYYY is the year, MM is the month, and DD is the day. | 123.26, 123.41(a), 123.45 ..... | 1. |
| **Enforcement Action Information** | | | |
| [**Note:** NPDES authorized programs will only need to share criminal action information with EPA when the criminal case is concluded.] | | | |
| Enforcement Action Identifier ... | The unique identifier for each enforcement action. For EPA enforcement actions, this field will be have three components, each separated by a hyphen (*e.g.,* 04–2014–4509). These three components are: (1) the EPA Region responsible for the enforcement action as identified by the EPA Region code (*e.g.,* 04); (2) the four-digit fiscal year during which the enforcement action is initiated (*e.g.,* 2014); and (3) a four-digit, user-assigned sequence number between 0001 and 9999 (*e.g.,* 4509). States will be able to use this same structure, or they will be able to use a different structure of their choosing provided that the first two characters of the identifier constitute the state code (*e.g.,* Alabama = "AL"). | 123.27, 123.41(a), and CWA section 309. | 1. |
| Enforcement Action Forum ..... | This identifies the forum of the formal enforcement action (e.g., administrative formal, judicial). This can be system generated. | 123.27, 123.41(a), and CWA section 309. | 1. |
| Enforcement Action Type ..... | The unique code/description that identifies the type for each formal or informal enforcement action. This code/description identifies, for example, whether the enforcement action is a civil judicial referral, a notice of violation, an administrative penalty order, administrative order, or criminal prosecution. | 123.27, 123.41(a), and CWA section 309. | 1. |
| Programs Violated (Enforcement Action). | The unique code/description that identifies each program (*e.g.,* pretreatment, biosolids/sewage sludge, MS4s, Core NPDES program) associated with each enforcement activity. | 123.27, 123.41(a), and CWA section 309. | 1. |

TABLE 2—REQUIRED NPDES PROGRAM DATA—Continued

| Data name | Data description | CWA, regulatory (40 CFR), or other citation | NPDES data group No. (*see* Table 1) |
|---|---|---|---|
| Enforcement Action Sub-activity Type. | A unique code/description that identifies the type for each sub-activity associated with each enforcement activity (*e.g.,* COMPS = compliance achieved, MECDJ = motion to enforce consent agreement, AHRG = administrative hearing, AMNCA = amended complaint). Some of these sub-activities are system required and some can be system generated. Data on sub-activities that are not milestones are optional. | 123.27, 123.41(a), and CWA section 309. | 1. |
| Enforcement Action Sub-activity Completion Date. | The date on which the sub-activity was completed. This data element is required for each sub-activity provided. The date must be provided in YYYY–MM–DD format where YYYY is the year, MM is the month, and DD is the day. Some of these dates can be system generated. | 123.27, 123.41(a), and CWA section 309. | 1. |
| **Final Order Information** | | | |
| [**Note:** These data elements are linked to the ''Enforcement Action Identifier''. NPDES authorized programs will only need to share criminal action information with EPA when the criminal case is concluded.] | | | |
| Final Order Identifier | The unique identifier for each final order. This data element can be system generated. | 123.27, 123.41(a), and CWA section 309. | 1. |
| Final Order Type | A unique code that identifies the legal process used by the authorized NPDES program to settle the enforcement action (*e.g.,* administrative compliance order, an administrative penalty order, consent decree, Federal facility agreement, criminal conviction or plea agreement). | 123.27, 123.41(a), and CWA section 309. | 1. |
| Final Order Issued/Entered Date. | For a judicial enforcement action this is the date the Clerk of the Court stamps the document after it is signed by the presiding Judge. For an administrative formal enforcement action this is the date the Final Order was issued. For a criminal enforcement action, this is the date the sentence was imposed. The date must be provided in YYYY–MM–DD format where YYYY is the year, MM is the month, and DD is the day. | 123.27, 123.41(a), and CWA section 309. | 1. |
| NPDES Closed Date | The date of closure for each NPDES final order. The date must be provided in YYYY–MM–DD format where YYYY is the year, MM is the month, and DD is the day. | 123.27, 123.41(a), and CWA section 309. | 1. |
| **Penalty Information** | | | |
| [**Note:** These data elements are linked to the ''Enforcement Action Identifier''. NPDES authorized programs will only need to share criminal action information with EPA when the criminal case is concluded.] | | | |
| Penalty Amount Assessed | For civil judicial enforcement actions, the dollar amount of the penalty assessed against the defendant(s) as specified in the final entered Consent Decree or Court Order. For administrative enforcement actions, it is the dollar amount of the penalty assessed in the Consent Decree or Final Order. For criminal enforcement actions, it is the dollar amount of the fine agreed to by the defendant or sentenced by the Court and should include fields for prison time, probation, home confinement or monitoring periods, restitution, and special assessments. | 123.27, 123.41(a), and CWA section 309. | 1. |
| Penalty Amount Collected | For civil judicial enforcement actions, the dollar amount of the penalty collected from the defendant(s). For administrative enforcement actions, it is the dollar amount collected of the penalty assessed in the Consent Decree or Final Order. For criminal enforcement actions, it is the dollar amount of the fine paid by the defendant as well as restitution and special assessments. | 123.27, 123.41(a), and CWA section 309. | 1. |
| Supplemental Environmental Project Identifier. | The unique identifier for each supplemental environmental project. This data element can be system generated. | 123.27, 123.41(a), and CWA section 309. | 1. |

TABLE 2—REQUIRED NPDES PROGRAM DATA—Continued

| Data name | Data description | CWA, regulatory (40 CFR), or other citation | NPDES data group No. (*see* Table 1) |
|---|---|---|---|
| Supplemental Environmental Project Amount. | The assessed cost, in dollars, of the one or more of the defendant's Supplemental Environmental Projects (SEPs). This is the dollar amount that is assessed either in addition to civil penalties or in lieu of civil penalties. This data element is only required if there is a SEP and may be entered at a later date when the data is available. | 123.27, 123.41(a), and CWA section 309. | 1. |
| Supplemental Environmental Project Description. | This text field summarizes the Supplemental Environmental Projects (SEPs) that the respondent has completed in response to an enforcement action. This data element is only required if there is a SEP and may be entered at a later date when the data is available. | 123.27, 123.41(a), and CWA section 309. | 1. |
| **Compliance Schedule Information** | | | |
| [**Note:** These data elements are linked to the "Enforcement Action Identifier".] | | | |
| Compliance Schedule Number | This number that in combination with the Compliance Schedule Type and NPDES ID uniquely identifies a compliance schedule. | 123.27, 123.41(a), and CWA section 309. | 1. |
| Compliance Schedule Type ..... | The unique code/description that identifies the type of compliance schedule (*e.g.,* an administrative formal action = "A", a judicial action = "J"). | 123.27, 123.41(a), and CWA section 309. | 1. |
| Compliance Schedule Description. | The unique code/description that identifies each type of condition or requirement (*e.g.,* best management practices plan development) for the compliance schedule. | 123.27, 123.41(a), and CWA section 309. | 1. |
| Compliance Schedule Event Code. | The unique code/description that identifies each event that is added within a compliance schedule. | 123.27, 123.41(a), and CWA section 309. | 1. |
| Compliance Schedule Due Date. | The date the compliance schedule event is scheduled to be completed (*i.e.,* the due date). The date must be provided in YYYY–MM–DD format where YYYY is the year, MM is the month, and DD is the day. | 123.27, 123.41(a), and CWA section 309. | 1. |
| Compliance Schedule Actual Date. | The actual date on which the compliance schedule event was completed or achieved. The date must be provided in YYYY–MM–DD format where YYYY is the year, MM is the month, and DD is the day. | 123.27, 123.41(a), and CWA section 309. | 1. |
| Compliance Schedule Report Received Date. | The date the regulatory agency received the report required by the compliance schedule report. The date must be provided in YYYY–MM–DD format where YYYY is the year, MM is the month, and DD is the day. | 123.27, 123.41(a), and CWA section 309. | 1. |

**Notes:**

(1) The NPDES program authority may prepopulate these data elements and other data elements (*e.g.,* Federal Registry System ID) in the NPDES electronic reporting systems in order to create efficiencies and standardization. For example, the NPDES program authority may configure their electronic reporting system to automatically generate NPDES IDs for control mechanisms for new facilities reported on a Pretreatment Program Report [40 CFR 403.12(i)]. Additionally, the NPDES program authority can decide whether to allow NPDES regulated entities to override these prepopulated data.

(2) The data elements in this table conform to EPA's policy regarding the application requirements for renewal or reissuance of NPDES permits for discharges from municipal separate storm sewer systems (see 61 FR 41698; 6 August 1996).

(3) The data elements in this table are also supported by the Office Management and Budget approved permit applications and forms for the NPDES program.

(4) These data will allow EPA and the NPDES program authority to link facilities, compliance monitoring activities, compliance determinations, and enforcement actions. For example, these data will provide several ways to make the following linkages: linking violations to enforcement actions and final orders; linking single event violations and compliance monitoring activities; linking program reports to DMRs; linking program reports to compliance monitoring activities; and linking enforcement activities and compliance monitoring activities.

## PART 403—GENERAL PRETREATMENT REGULATIONS FOR EXISTING AND NEW SOURCES OF POLLUTION

■ 24. The authority citation for part 403 continues to read as follows:

**Authority:** 33 U.S.C. 1251 *et seq.*

■ 25. Amend § 403.10 by adding paragraph (f)(2)(viii) to read as follows:

**§ 403.10 Development and submission of NPDES State pretreatment programs.**

* * * * *

(f) * * *

(2) * * *

(viii) Regularly notify all Control Authorities of electronic submission requirements of 40 CFR part 127.

* * * * *

■ 26. Amend § 403.12 by revising paragraphs (e)(1), (h), and (i) introductory text to read as follows:

**§ 403.12 Reporting requirements for POTW's and industrial users.**

* * * * *

(e) * * *

(1) Any Industrial User subject to a categorical Pretreatment Standard (except a Non-Significant Categorical User as defined in § 403.3(v)(2)), after the compliance date of such Pretreatment Standard, or, in the case of a New Source, after commencement of the discharge into the POTW, shall submit to the Control Authority during the months of June and December, unless required more frequently in the Pretreatment Standard or by the Control Authority or the Approval Authority, a report indicating the nature and concentration of pollutants in the effluent which are limited by such categorical Pretreatment Standards. In addition, this report shall include a record of measured or estimated average and maximum daily flows for the reporting period for the Discharge reported in paragraph (b)(4) of this section except that the Control Authority may require more detailed reporting of flows. In cases where the Pretreatment Standard requires compliance with a Best Management Practice (or pollution prevention alternative), the User shall submit documentation required by the Control Authority or the Pretreatment Standard necessary to determine the compliance status of the User. At the discretion of the Control Authority and in consideration of such factors as local high or low flow rates, holidays, budget cycles, etc., the Control Authority may modify the months during which the above reports are to be submitted. For Industrial Users for which EPA or the authorized state, tribe, or territory is the Control Authority, as of December 21, 2020 all reports submitted in compliance with this section must be submitted electronically by the industrial user to the Control Authority or initial recipient, as defined in 40 CFR 127.2(b), in compliance with this section and 40 CFR part 3 (including, in all cases, subpart D to part 3), 40 CFR 122.22, and 40 CFR part 127. Part 127 is not intended to undo existing requirements for electronic reporting. Prior to this date, and independent of part 127, the Industrial Users for which EPA or the authorized state, tribe, or territory is the Control Authority may be required to report electronically if specified by a particular control mechanism or if required to do so by state law.

* * * * *

(h) *Reporting requirements for Industrial Users not subject to categorical Pretreatment Standards.* The Control Authority must require appropriate reporting from those Industrial Users with Discharges that are not subject to categorical Pretreatment Standards. Significant Non-categorical Industrial Users must submit to the Control Authority at least once every six months (on dates specified by the Control Authority) a description of the nature, concentration, and flow of the pollutants required to be reported by the Control Authority. In cases where a local limit requires compliance with a Best Management Practice or pollution prevention alternative, the User must submit documentation required by the Control Authority to determine the compliance status of the User. These reports must be based on sampling and analysis performed in the period covered by the report, and in accordance with the techniques described in part 136 of this chapter and amendments thereto. This sampling and analysis may be performed by the Control Authority in lieu of the significant non-categorical Industrial User. For Industrial Users for which EPA or the authorized state, tribe, or territory is the Control Authority, as of December 21, 2020 all reports submitted in compliance with this section must be submitted electronically by the industrial user to the Control Authority or initial recipient, as defined in 40 CFR 127.2(b), in compliance with this section and 40 CFR part 3 (including, in all cases, subpart D to part 3), 40 CFR 122.22, and 40 CFR part 127. Part 127 is not intended to undo existing requirements for electronic reporting. Prior to this date, and independent of part 127, the Industrial Users for which EPA or the authorized state, tribe, or territory is the Control Authority may be required to report electronically if specified by a particular control mechanism or if required to do so by state law.

(i) *Annual POTW reports.* POTWs with approved Pretreatment Programs shall provide the Approval Authority with a report that briefly describes the POTW's program activities, including activities of all participating agencies, if more than one jurisdiction is involved in the local program. The report required by this section shall be submitted no later than one year after approval of the POTW's Pretreatment Program, and at least annually thereafter, and must include, at a minimum, the applicable required data in appendix A to 40 CFR part 127. The report required by this section must also include a summary of changes to the POTW's pretreatment program that have not been previously reported to the Approval Authority and any other relevant information requested by the Approval Authority. As of December 21, 2020 all annual reports submitted in compliance with this section must be submitted electronically by the POTW Pretreatment Program to the Approval Authority or initial recipient, as defined in 40 CFR 127.2(b), in compliance with this section and 40 CFR part 3 (including, in all cases, subpart D to part 3), 40 CFR 122.22, and 40 CFR part 127. Part 127 is not intended to undo existing requirements for electronic reporting. Prior to this date, and independent of part 127, the Approval Authority may also require POTW Pretreatment Programs to electronically submit annual reports under this section if specified by a particular permit or if required to do so by state law.

* * * * *

## PART 501—STATE SLUDGE MANAGEMENT PROGRAM REGULATIONS

■ 27. The authority citation for part 501 continues to read as follows:

**Authority:** 33 U.S.C. 1251 *et seq.*

■ 28. Revise § 501.21 to read as follows:

**§ 501.21 Program reporting to EPA.**

As of December 21, 2020, state sludge management programs must comply with 40 CFR part 3 and 40 CFR part 127 (including the applicable required data elements in appendix A to part 127).

## PART 503—STANDARDS FOR THE USE OR DISPOSAL OF SEWAGE SLUDGE

■ 29. The authority citation for part 503 continues to read as follows:

**Authority:** Sections 405 (d) and (e) of the Clean Water Act, as amended by Pub. L. 95–217, sec. 54(d), 91 Stat. 1591 (33 U.S.C. 1345 (d) and (e)); and Pub. L. 100–4, title IV, sec. 406(a), (b), 101 Stat., 71, 72 (33 U.S.C. 1251 *et seq.*).

■ 30. Amend § 503.18 by revising paragraph (a) introductory text to read as follows:

**§ 503.18 Reporting.**

(a) Class I sludge management facilities, POTWs (as defined in § 501.2 of this chapter) with a design flow rate equal to or greater than one million

gallons per day, and POTWs that serve 10,000 people or more shall submit a report on February 19 of each year. As of December 21, 2016 all reports submitted in compliance with this section must be submitted electronically by the operator to EPA when the Regional Administrator is the Director in compliance with this section and 40 CFR part 3 (including, in all cases, subpart D to part 3), 40 CFR 122.22, and 40 CFR part 127. As of December 21, 2020 all reports submitted in compliance with this section must be submitted electronically in compliance with this section and 40 CFR part 3 (including, in all cases, subpart D to part 3), 40 CFR 122.22, and 40 CFR part 127. Part 127 is not intended to undo existing requirements for electronic reporting. Prior to the start dates for electronic reporting (see Table 1 in 40 CFR 127.16), the Director may also require operators to electronically submit annual reports under this section if required to do so by state law.

* * * * *

■ 31. Revise § 503.28 to read as follows:

**§ 503.28 Reporting.**

Class I sludge management facilities, POTWs (as defined in 40 CFR 501.2) with a design flow rate equal to or greater than one million gallons per day, and POTWs that serve 10,000 people or more shall submit a report on February 19 of each year. As of December 21, 2016 all reports submitted in compliance with this section must be submitted electronically by the operator to EPA when the Regional Administrator is the Director in compliance with this section and 40 CFR part 3 (including, in all cases, subpart D to part 3), 40 CFR 122.22, and 40 CFR part 127. As of December 21, 2020 all reports submitted in compliance with this section must be submitted electronically in compliance with this section and 40 CFR part 3 (including, in all cases, subpart D to part 3), 40 CFR 122.22, and 40 CFR part 127. Part 127 is not intended to undo existing requirements for electronic reporting. Prior to the start dates for electronic reporting (see Table 1 in 40 CFR 127.16), the Director may also require operators to electronically submit annual reports under this section if required to do so by state law.

■ 32. Revise § 503.48 to read as follows:

**§ 503.48 Reporting.**

Class I sludge management facilities, POTWs (as defined in § 501.2 of this chapter) with a design flow rate equal to or greater than one million gallons per day, and POTWs that serve a population of 10,000 people or greater shall submit a report on February 19 of each year. As of December 21, 2016 all reports submitted in compliance with this section must be submitted electronically by the operator to EPA when the Regional Administrator is the Director in compliance with this section and 40 CFR part 3 (including, in all cases, subpart D to part 3), 40 CFR 122.22, and 40 CFR part 127. As of December 21, 2020 all reports submitted in compliance with this section must be submitted electronically in compliance with this section and 40 CFR part 3 (including, in all cases, subpart D to part 3), 40 CFR 122.22, and 40 CFR part 127. Part 127 is not intended to undo existing requirements for electronic reporting. Prior to the start dates for electronic reporting (see Table 1 in 40 CFR 127.16), the Director may also require operators to electronically submit annual reports under this section if required to do so by state law.

[FR Doc. 2015–24954 Filed 10–21–15; 8:45 am]

BILLING CODE 6560–50–P

# FEDERAL REGISTER

Vol. 80 Thursday,

No. 204 October 22, 2015


Part III

## Environmental Protection Agency

40 CFR Part 52

Air Plan Approval; Minnesota and Michigan; Revision to Taconite Federal Implementation Plan; Proposed Rule

**ENVIRONMENTAL PROTECTION AGENCY**

**40 CFR Part 52**

**[EPA–R05–OAR–2015–0196; FRL–9934–15–Region 5]**

## Air Plan Approval; Minnesota and Michigan; Revision to Taconite Federal Implementation Plan

**AGENCY:** Environmental Protection Agency (EPA).

**ACTION:** Proposed rule.

**SUMMARY:** The Environmental Protection Agency (EPA) is proposing revisions to a Federal implementation plan (FIP) addressing the requirement for best available retrofit technology (BART) for taconite plants in Minnesota and Michigan. In response to petitions for reconsideration, we are proposing to revise the nitrogen oxides ($NO_X$) limits for taconite furnaces at facilities owned and operated by Cliffs Natural Resources (Cliffs) and ArcelorMittal USA LLC (ArcelorMittal). We are also proposing to revise the sulfur dioxide ($SO_2$) requirements at two of Cliffs' facilities. We are proposing these changes because new information has come to light that was not available when we originally promulgated the FIP on February 6, 2013.

**DATES:** Comments must be received on or before November 23, 2015.

**ADDRESSES:** Submit your comments, identified by Docket ID No. EPA–R05–OAR–2015–0196, by one of the following methods:

1. *www.regulations.gov:* Follow the on-line instructions for submitting comments.
2. *Email: aburano.douglas@epa.gov.*
3. *Fax:* (312) 408–2279.
4. *Mail:* Douglas Aburano, Chief, Attainment Planning and Maintenance Section, Air Programs Branch (AR–18J), U.S. Environmental Protection Agency, 77 West Jackson Boulevard, Chicago, Illinois 60604.
5. *Hand Delivery:* Douglas Aburano, Chief, Attainment Planning and Maintenance Section, Air Programs Branch (AR–18J), U.S. Environmental Protection Agency, 77 West Jackson Boulevard, Chicago, Illinois 60604. Such deliveries are only accepted during the Regional Office normal hours of operation, and special arrangements should be made for deliveries of boxed information. The Regional Office official hours of business are Monday through Friday, 8:30 a.m. to 4:30 p.m., excluding Federal holidays.

*Instructions:* Direct your comments to Docket ID Nos. EPA–R05–OAR–2015–0196. EPA's policy is that all comments received will be included in the public docket without change and may be made available online at *www.regulations.gov,* including any personal information provided, unless the comment includes information claimed to be Confidential Business Information (CBI) or other information whose disclosure is restricted by statute. Do not submit information that you consider to be CBI or otherwise protected through *www.regulations.gov* or email. The *www.regulations.gov* Web site is an ''anonymous access'' system, which means EPA will not know your identity or contact information unless you provide it in the body of your comment. If you send an email comment directly to EPA without going through *www.regulations.gov* your email address will be automatically captured and included as part of the comment that is placed in the public docket and made available on the Internet. If you submit an electronic comment, EPA recommends that you include your name and other contact information in the body of your comment and with any disk or CD–ROM you submit. If EPA cannot read your comment due to technical difficulties and cannot contact you for clarification, EPA may not be able to consider your comment. Electronic files should avoid the use of special characters, any form of encryption, and be free of any defects or viruses. For additional instructions on submitting comments, go to Section I of the **SUPPLEMENTARY INFORMATION** section of this document.

*Docket:* All documents in the docket are listed in the *www.regulations.gov* index. Although listed in the index, some information is not publicly available, *e.g.,* CBI or other information whose disclosure is restricted by statute. Certain other material, such as copyrighted material, will be publicly available only in hard copy. Publicly available docket materials are available either electronically in *www.regulations.gov* or in hard copy at the Environmental Protection Agency, Region 5, Air and Radiation Division, 77 West Jackson Boulevard, Chicago, Illinois 60604. This facility is open from 8:30 a.m. to 4:30 p.m., Monday through Friday, excluding Federal holidays. We recommend that you telephone Steven Rosenthal at (312) 886–6052 before visiting the Region 5 office.

**FOR FURTHER INFORMATION CONTACT:** Steven Rosenthal, Environmental Engineer, Attainment Planning & Maintenance Section, Air Programs Branch (AR–18J), U.S. Environmental Protection Agency, Region 5, 77 West Jackson Boulevard, Chicago, Illinois 60604, (312) 886–6052, *rosenthal.steven@epa.gov.*

**SUPPLEMENTARY INFORMATION:** Throughout this document whenever ''we,'' ''us,'' or ''our'' is used, we mean EPA. This notice is arranged as follows:

I. What should I consider as I prepare my comments for EPA?
II. What action is EPA taking?
III. Background
IV. Petitions for Reconsideration of 2013 Taconite FIP
V. EPA's Basis for Granting Reconsideration
VI. Basis for Proposed Revisions to 2013 Taconite FIP Requirements
VII. Statutory and Executive Order Reviews

### I. What should I consider as i prepare my comments for EPA?

When submitting comments, remember to:

1. Identify the rulemaking by docket number and other identifying information (subject heading, **Federal Register** date, and page number).
2. Follow directions—The EPA may ask you to respond to specific questions or organize comments by referencing a Code of Federal Regulations (CFR) part or section number.
3. Explain why you agree or disagree; suggest alternatives and substitute language for your requested changes.
4. Describe any assumptions and provide any technical information and/or data that you used.
5. If you estimate potential costs or burdens, explain how you arrived at your estimate in sufficient detail to allow for it to be reproduced.
6. Provide specific examples to illustrate your concerns, and suggest alternatives.
7. Explain your views as clearly as possible, avoiding the use of profanity or personal threats.
8. Make sure to submit your comments by the comment period deadline identified.

### II. What action is EPA taking?

On February 6, 2013, EPA promulgated a FIP that included BART limits for certain taconite furnaces in Minnesota and Michigan (2013 Taconite FIP; 78 FR 8706). EPA is proposing to revise the 2013 Taconite FIP with respect to the BART emission limitations and compliance schedules for the following taconite plants: United Taconite, Hibbing Taconite, Tilden Mining, and ArcelorMittal Minorca Mine. Cliffs is the owner and operator of the United Taconite and Tilden Mining facilities and part owner and operator of Hibbing Taconite. ArcelorMittal is the owner and operator of the Minorca Mine facility and a part owner of the Hibbing Taconite facility.

Specifically, EPA is proposing to revise the $NO_X$ limits and compliance schedules for these four facilities and is also proposing to revise the $SO_2$ requirements for Tilden Mining and United Taconite.

## III. Background

### *A. Requirements of the Clean Air Act and EPA's Regional Haze Rule*

In section 169A of the 1977 Amendments to the Clean Air Act (CAA), Congress created a program for protecting visibility in the nation's national parks and wilderness areas. This section of the CAA establishes as a national goal the ''prevention of any future, and the remedying of any existing, impairment of visibility in mandatory Class I Federal areas [1] which impairment results from manmade air pollution.'' Congress added section 169B to the CAA in 1990 to address regional haze issues. EPA promulgated a rule to address regional haze on July 1, 1999. 64 FR 35714 (July 1, 1999), codified at 40 CFR part 51, subpart P (herein after referred to as the ''Regional haze Rule''). The Regional Haze Rule revised the existing visibility regulations to add provisions addressing regional haze impairment and established a comprehensive visibility protection program for Class I areas. The requirements for regional haze, found at 40 CFR 51.308 and 51.309, are included in EPA's visibility protection regulations at 40 CFR 51.300–309.

### *B. Best Available Retrofit Technology (BART)*

Section 169A of the CAA directs states, or EPA if developing a FIP, to evaluate the use of retrofit controls at certain larger, often uncontrolled, older stationary sources in order to address visibility impacts from these sources. Specifically, section 169A(b)(2)(A) of the CAA requires EPA to develop a FIP that contains such measures as may be necessary to make reasonable progress toward the natural visibility goal, including a requirement that certain categories of existing major stationary sources [2] built between 1962 and 1977 procure, install, and operate the ''Best Available Retrofit Technology'' as determined by EPA. Under the Regional Haze Rule, states (or in the case of a FIP, EPA) are directed to conduct BART determinations for such ''BART-eligible'' sources that may reasonably be anticipated to cause or contribute to any visibility impairment in a Class I area.

On July 6, 2005, EPA published the *Guidelines for BART Determinations Under the Regional Haze Rule* at appendix Y to 40 CFR part 51 (hereinafter referred to as the ''BART Guidelines'') to assist states and EPA in determining which sources should be subject to the BART requirements and in determining appropriate emission limits for each applicable source. 70 FR 39104.

The process of establishing BART emission limitations follows three steps: First, identify those sources which meet the definition of ''BART-eligible source'' set forth in 40 CFR 51.301; [3] second, determine which of these sources ''emits any air pollutant which may reasonably be anticipated to cause or contribute to any impairment of visibility in any such area'' (a source which fits this description is ''subject to BART''); and third, for each source subject to BART, identify the best available type and level of control for reducing emissions.

States, or EPA if developing a FIP, must address all visibility-impairing pollutants emitted by a source in the BART determination process. The most significant visibility impairing pollutants are $SO_2$, $NO_X$, and particulate matter (PM).

A state implementation plan (SIP) or FIP addressing regional haze must include source-specific BART emission limits and compliance schedules for each source subject to BART. Once a state or EPA has made a BART determination, the BART controls must be installed and operated as expeditiously as practicable, but no later than five years after the date of the final SIP or FIP. *See* CAA section 169A(g)(4) and 40 CFR 51.308(e)(1)(iv). In addition to what is required by the Regional Haze Rule, general SIP requirements mandate that the SIP or FIP include all regulatory requirements related to monitoring, recordkeeping, and reporting for the BART controls on the source. *See* CAA section 110(a).

### *C. Regulatory and Legal History of the 2013 Taconite FIP*

On February 6, 2013, EPA promulgated a FIP (78 FR 8706) that included BART limits for taconite furnaces subject to BART in Minnesota and Michigan. EPA took this action because Minnesota and Michigan had failed to meet a statutory deadline to submit their Regional Haze SIPs and subsequently failed to require BART at the taconite facilities. Cliffs, ArcelorMittal, and the State of Michigan petitioned the Eighth Circuit Court of Appeals for review of the FIP, and, on May 17, 2013, Cliffs and ArcelorMittal filed a joint motion for stay of the final rule, which was granted by the Eighth Circuit on June 14, 2013, and is still in effect.

EPA received petitions for reconsideration of the 2013 Taconite FIP from the National Mining Association on March 8, 2013, ArcelorMittal on March 22, 2013, the State of Michigan on April 1, 2013, Cliffs on April 3, 2013, Congressman Richard M. Nolan on April 8, 2013, the State of Minnesota on April 8, 2013, and United States Steel Corporation (U.S. Steel) on November 26, 2013.

In a related action, EPA published a final partial disapproval of the Michigan and Minnesota Regional Haze SIPs on September 30, 2013 (78 FR 59825), for failure to require BART for $SO_2$ and $NO_X$ emissions from taconite furnaces subject to BART. By petitions dated November 26, 2013, Cliffs and U.S. Steel petitioned EPA pursuant to section 307(d)(7)(B) of the CAA for reconsideration of EPA's partial disapproval of the Michigan and Minnesota Regional Haze SIPs. Further, Cliffs, ArcelorMittal, Michigan and U.S. Steel petitioned the Eight Circuit Court of Appeals for review of the final rule partially disapproving the Michigan and Minnesota Regional Haze SIPs.

EPA subsequently reached a settlement agreement with Cliffs, ArcelorMittal, and Michigan regarding issues raised by these parties in their petitions for review and reconsideration. Notice of the settlement was published in the **Federal Register** on January 30, 2015 (80 FR 5111), and the settlement agreement was fully executed on April 9, 2015. Pursuant to the settlement agreement, EPA granted partial reconsideration of the 2013

[1] Areas designated as mandatory Class I Federal areas consist of national parks exceeding 6000 acres, wilderness areas and national memorial parks exceeding 5000 acres, and all international parks that were in existence on August 7, 1977. 42 U.S.C. 7472(a). In accordance with section 169A of the CAA, EPA, in consultation with the Department of Interior, promulgated a list of 156 areas where visibility is identified as an important value. 44 FR 69122 (November 30, 1979). The extent of a mandatory Class I area includes subsequent changes in boundaries, such as park expansions. 42 U.S.C. 7472(a). Although states and tribes may designate as Class I additional areas which they consider to have visibility as an important value, the requirements of the visibility program set forth in section 169A of the CAA apply only to ''mandatory Class I Federal areas.'' Each mandatory Class I Federal area is the responsibility of a ''Federal Land Manager.'' 42 U.S.C. 7602(i). When we use the term ''Class I area'' in this action, we mean a ''mandatory Class I Federal area.''

[2] The set of ''major stationary sources'' potentially subject to BART is listed in CAA section 169A(g)(7), and includes ''taconite ore processing facilities.''

[3] BART-eligible sources are those sources that have the potential to emit 250 tons or more of a visibility-impairing air pollutant, were not in operation prior to August 7, 1962, but were in existence on August 7, 1977, and whose operations fall within one or more of 26 specifically listed source categories. 40 CFR 51.301.

Taconite FIP on July 2, 2015, based on new information raised in Cliffs, ArcelorMittal, and Michigan's petitions for reconsideration. EPA did not grant reconsideration of the 2013 SIP disapprovals because EPA continues to believe that BART for taconite plants involves significant reductions of $NO_X$ and $SO_2$ emissions that were not required in the Michigan and Minnesota SIPs.

## IV. Petitions for Reconsideration of 2013 Taconite FIP

### *A. Summary of Petitions for Reconsideration*

1. *National Mining Association* petitioned for reconsideration because EPA promulgated the 2013 FIP before finalizing its disapproval of the Michigan and Minnesota regional haze SIPs.

2. *Michigan Department of Environmental Quality (MDEQ)* petitioned for reconsideration because, in its view: (1) There was no information available prior to the close of Michigan's public comment period on June 23, 2010, indicating that low $NO_X$ burners (LNBs) had been successfully utilized on indurating furnaces; (2) the FIP schedule for compliance did not provide sufficient time for the permitting process necessary for the installation of the LNBs; and (3) EPA had not followed proper procedure by finalizing the FIP for Tilden while at the same time asking for additional comment on the SIP disapproval for Tilden.

3. *Congressman Richard M. Nolan* petitioned for reconsideration because, in his view: (1) New information came to his attention concerning the accuracy of EPA's visibility modeling; (2) the feasibility of LNB technology was not established at the time EPA intervened in the process; and (3) it was doubtful that LNBs could be successfully installed and operated in the 26 months called for in the FIP.

4. *Minnesota Pollution Control Agency (MPCA)* petitioned for reconsideration of the compliance schedules in the FIP and asked for a 10-month extension of the compliance deadlines for affected facilities with more than one affected process line to provide adequate time for MPCA to issue the required air quality permits.

5. *Cliffs* petitioned for reconsideration because of perceived procedural defects in EPA's decision to issue the FIP rule while it was simultaneously evaluating Minnesota and Michigan's SIPs. Cliffs also raised technical issues based on new information not available at the time EPA promulgated the 2013 FIP. These technical issues included the following: (a) The FIP imposed a new 0.60% sulfur limit on coal combusted at United Taconite that was not proposed and was inappropriate because it would require the use of a new type of coal that the facility is not designed to handle, (b) the 2013 FIP restricts Tilden to combusting natural gas instead of coal, and (c) installation of LNBs will require a minimum of 34 months for the first straight-grate furnace and a minimum of 39 months for the first grate kiln furnace, instead of the 26 months provided in the original 2013 FIP compliance schedule. Cliffs also provided additional evidence that, in its view, indicates that installation and operation of LNBs would be more costly and would require more time to install than EPA estimated, including (1) estimates by furnace engineers and burner manufacturers that LNB capital costs for Cliffs' furnaces will be a minimum of 4–5 times higher than EPA's Minntac-based cost estimate,(2) estimates by Cliffs' furnace designer, Metso Minerals (Metso), and burner manufacturer, Fives North America (Fives), that there would be an energy penalty of 20–40% while operating the LNBs, and (3) an analysis by Metso indicating that Cliffs would lose approximately $195 million in production costs across its six lines because installing LNB cannot be accomplished within normal annual outage time and will also impair production during the shakedown period after installation.

6. *ArcelorMittal* petitioned for reconsideration because of perceived procedural defects in EPA's decision to finalize the 2013 Taconite FIP while still working to evaluate Minnesota's SIP. ArcelorMittal claimed that EPA can only issue a FIP after it has fully and properly evaluated the SIP, found it to be deficient, and provided a reasonable opportunity for the state to address EPA's concerns. ArcelorMittal also raised the following technical issues in the attachment to its petition for reconsideration: (1) The costs of LNBs, (2) the lack of any existing straight-grate furnaces with LNB technology and the resulting unwillingness of vendors to provide performance guarantees, (3) significant production losses because of the downtime resulting from installation and adjustment of LNBs at Hibbing, and (4) energy penalties due to the need for 25% more natural gas at Hibbing and 10% to 20% more natural gas at Minorca to operate the LNBs.

7. *U.S. Steel* petitioned for reconsideration because it had obtained new information showing that variations in kiln configuration may have a substantial impact on the cost and performance of LNBs installed on grate-kiln furnaces. In its November 26, 2013 petition for reconsideration of the September 30, 2013 partial disapproval of the Michigan and Minnesota regional haze SIPs, Cliffs referenced U.S. Steel's petition for reconsideration in which it cited concerns related to the high costs and energy penalties associated with the installation of LNBs, as well as pellet quality issues.

### *B. Issues for Which EPA Has Granted Reconsideration*

EPA believes that the new information contained in the petitions for reconsideration, as well as other supporting information provided by Cliffs, represents significant new information that warrants reconsideration of many of the emission limits that EPA promulgated for the taconite facilities in 2013. As a result, on July 2, 2015, EPA sent letters to Cliffs, ArcelorMittal, and Michigan granting portions of their petitions for reconsideration. Specifically, EPA is granting reconsideration, pursuant to section 307(d)(7)(b) of the CAA, of the $NO_X$ and $SO_2$ emission limits for the grate-kiln furnaces and the $NO_X$ emission limits for the straight-grate furnaces listed in the following table.

| State | Facility—owner | Unit(s) | Pollutant(s) |
|---|---|---|---|
| Minnesota | United Taconite—Cliffs | Grate-Kiln Lines 1 and 2 | $NO_X$ and $SO_2$. |
| Minnesota | Minora Mine—ArcelorMittal | Straight-Grate Line 1 | $NO_X$. |
| Minnesota | Hibbing Taconite—Cliffs (operator and part owner).<br>ArcelorMittal (part owner)<br>U.S. Steel (part owner) | Straight-Grate Lines 1–3 | $NO_X$. |
| Michigan | Tilden Mining—Cliffs | Grate-Kiln Line 1 | $NO_X$ and $SO_2$. |

The U.S. taconite iron ore industry uses two types of pelletizing machines or processes: Straight-grate kilns and grate-kilns. In a straight-grate kiln, a continuous bed of agglomerated green pellets is carried through different temperature zones with upward draft or downward draft blown through the pellets on the metal grate. The grate-kiln system consists of a traveling grate, a rotary kiln, and an annular cooler. A significant difference between these designs is that straight-grate kilns do not burn coal and therefore have a much lower potential for emitting $SO_2$. Further, even within the same kiln type or process, individual (referred to as indurating or pelletizing) furnaces or processes have distinct equipment and process characteristics that may affect the compatibility and performance of certain types of burners. The differences between these kilns and processes form a key basis for the changes to the emissions limits proposed in this action.

EPA is not reconsidering all elements of its 2013 FIP. The 2013 FIP contains $SO_2$ and $NO_X$ limits for U.S. Steel's Minntac and Keetac taconite furnaces in Minnesota. EPA has not granted U.S. Steel's petition and is not proposing any revisions of the BART limits for these U.S. Steel facilities at this time. Also, EPA is not reconsidering the $NO_X$ limits at Cliffs' Northshore taconite plant because this facility is already complying with the 1.2 pounds per million Btu (lb/mmBtu) $NO_X$ limit in the 2013 FIP. Finally, EPA is not reconsidering the $SO_2$ limits at the Hibbing, ArcelorMittal, or Northshore straight-grate furnaces.

## V. EPA's Basis for Granting Reconsideration

The 2013 Taconite FIP established BART $NO_X$ limits for all straight-grate and grate-kiln taconite furnaces. The limits are 1.2 lbs $NO_X$/MMBtu when burning natural gas and 1.5 lbs/MMBtu when burning a gas/coal mix. These limits were based upon the performance of high stoichiometric (high-stoich) LNBs [4] at two of U.S. Steel Minntac's grate-kilns. As explained in more detail below, we granted reconsideration of the $NO_X$ limits for the United Taconite and Tilden grate-kilns, as well as for the Hibbing and ArcelorMittal straight-grate kilns, because information that became available after the close of the public comment period (September 28, 2012) suggests that the installation of high-stoich LNBs at these furnaces could lead to serious technical hurdles. In addition, we granted reconsideration of the $SO_2$ limits for the United Taconite and Tilden grate-kilns because of information that became available after the close of the public comment period regarding the inability of United Taconite to handle and burn very low sulfur coal and Tilden's intent to burn mixed fuels.

In determining whether to grant reconsideration of certain provisions of the 2013 Taconite FIP, the requirements of section 307(d)(7)(B) of the CAA apply. Section 307(d)(7)(B) provides a two-step test to determine whether reconsideration should be granted. The petitioner must first show that it was impracticable to raise the comment or objection within the time period for public comment of the rule, or, that the grounds for the comment or objection arose after the period for public comment. Secondly, the petitioner must show that the comment or objection is of ''central relevance to the outcome of the rule.''

Cliffs and ArcelorMittal provided significant new information in their petitions for reconsideration and supplemental submittals directly relevant to the outcome of the 2013 Taconite FIP. The following discussion details the new information upon which EPA is relying to base reconsideration of the BART emission limits and compliance schedules for these facilities, and how the information meets the criteria of section 307(d)(7)(B) of the CAA.

### *A. United Taconite*

#### 1. $NO_X$ Emission Limit

EPA determined the $NO_X$ emission limits for BART in the 2013 Taconite FIP primarily from data arising from the installation of high-stoich LNBs at U.S. Steel Minntac's furnaces 6 and 7. Although the United Taconite furnaces and the Minntac furnaces are all grate-kiln furnaces, Cliffs provided new information after the close of the comment period that described various differences between the furnaces. These differences included the structure of the kiln, the use of pre-heaters, and the types of ore and pellets processed. Cliffs indicated that because of these differences, the installation of high-stoich LNBs at United Taconite would likely result in the impairment of pellet quality and production, as well as increased fuel usage and emissions. Cliffs subsequently provided modeling analyses that detailed the impacts arising from the installation of high-stoich LNBs at United Taconite.

Cliffs submitted a declaration by Eric Wagner (of Metso) dated November 26, 2013, which describes the differences relevant to $NO_X$ emissions between US Steel's Minntac furnaces 6 and 7, upon which the 2013 Taconite FIP $NO_X$ limits were based, and Cliffs' grate-kiln furnaces at United Taconite. The declaration describes several differences that EPA believes are relevant to the development of BART $NO_X$ emission limits. For example, whereas United Taconite uses a single large kiln burner, Minntac furnaces 6 and 7 operate preheat burners, which supply about one-third of the heat input from fuel, in addition to a large kiln burner. The smaller preheat burners at Minntac achieve very low $NO_X$ rates (0.1–0.3 lbs/MMBtu) due to a more favorable $NO_X$ reduction combustion environment in the preheat zone as compared to the firing end of the kiln. Correspondingly, the lower $NO_X$ emissions from the preheaters result in a lower combined $NO_X$ emission rate than the emissions arising from a large single kiln LNB.

Another example in the declaration notes that the ore processed at the facilities is different, resulting in different heat values. U.S. Steel's Minntac facility processes an ore high in magnetite that contributes heat to the kiln when oxidized. Correspondingly, by processing high magnetite ore at Minntac furnaces 6 and 7, U.S. Steel is able to effectively use ported kilns to maximize the benefit of the ore. Ported kilns allow the introduction of additional air directly to the kilns which helps oxidize the high magnetite ore, and changes the heat balance of the furnace. In contrast, United Taconite processes ores with a lower concentration of magnetite than the ore processed at Minntac, and correspondingly, cannot effectively use ported kilns. Because ported kilns change the heat balance of the furnace, U.S Steel's experience with high-stoich LNBs at the Minntac furnaces may not be directly applicable to the United Taconite furnaces.

A final example from the declaration states that the application of high-stoich LNB technology at United Taconite would require additional air to reduce burner flame temperature, which would result in increased airflow through the grate drying section and increased pressure drop across the greenballs, which are the raw feed to the indurating furnace. This higher bed pressure would result in deformed pellets, reduced pellet quality, and lost production. Further, the increased air flow would also likely cause pellet breakage that would reduce production. The declaration notes that to avoid these

[4] Stoichiometry refers to the relationship between the actual quantity of combustion air to the theoretical minimum quantity of air needed for 100 percent combustion of the fuel.

impacts, United Taconite likely would have to limit the dryer section air flow and drying rate by reducing the amount of recovered heat from the cooler. However, any unrecovered heat would have to be replaced with additional heat from the burner, with corresponding increased fuel usage and emissions.

Subsequent to the submission of the declaration, Cliffs provided a modeling analysis that supported the information provided in the declaration. A report by Metso dated August 7, 2014, entitled ''Technical Analysis for applying LNB technology to (United Taconite) UTAC Line 2 Grate-Kiln,'' provides a detailed analysis of expected impacts from using high-stoich LNBs on pellet quality, fuel usage, and emissions. Metso analyzed the effects of LNB technology on the United Taconite Line 2 Grate-Kiln by using simulation modeling in which Metso compared Line 2's normal operating conditions, which result in the production of quality pellets, with simulations performed using high-stoich LNBs (which are the basis of the 2013 Taconite FIP limits). The report indicates that to maintain airflow, temperature, and pressures sufficient to minimize pellet quality issues would require a significant increase in fuel rates and corresponding emissions. Further, the use of high-stoich LNBs would result in decreased oxygen in the preheat zone gases from the kiln. The corresponding reduction in the oxidation heat on the grate would result in lower pellet temperatures at the point where the pellets leave the grate and enter the kiln. This would likely result in pellet breakage and a corresponding reduction in production.

Finally, Cliffs provided additional information to EPA in a July 28, 2014 meeting, which Cliffs summarized in an August 8, 2014 letter to EPA. The information provided included data comparing performance, costs, and fuel usage between high-stoich LNBs and low-stoich LNBs. Much of the information set forth in the August 8 letter is presented in section VI of this notice, pertaining to the $NO_X$ BART analysis. In general, the information pertains to advantages of the low-stoich LNBs over the high-stoich LNBs.

The information provided by Cliffs in its petition for reconsideration and subsequent submittals arose from recent, time-consuming research and analysis that could not have been completed and made available during the public comment period. Therefore, Cliffs has met the first requirement of the criteria for reconsideration set forth at section 307(d)(7)(B) of the CAA. Significantly, the information that Cliffs provided is of central relevance to the outcome of the 2013 Taconite FIP. EPA extensively based its $NO_X$ BART analysis on the results arising from the installation of high-stoich LNBs at U.S. Steel's Minntac furnaces 6 and 7. Step one of a BART analysis requires the identification of all available retrofit control technologies. Step two of a BART analysis requires the elimination of technically infeasible control technologies. The new information provided by Cliffs directly bears on the evaluation of the selection and feasibility of high-stoich LNBs for use in the grate-kiln indurating furnaces at the United Taconite facility. On this basis, we granted reconsideration of the $NO_X$ determination for United Taconite (Lines 1 and 2) and for the corresponding emission limits and compliance schedule.

2. $SO_2$ Emission Limit

The 2013 Taconite FIP set a 0.60% sulfur limit on coal combusted at United Taconite. We promulgated this limit in response to a proposal by Cliffs to use low sulfur fuel at United Taconite to decrease baseline $SO_2$ emissions. However, Cliffs did not have an opportunity to comment on the specific numeric stringency of the limit we promulgated. In other words, it was impracticable for Cliffs to comment on the final sulfur limit prior to the close of the public comment period.

In its petition for reconsideration, Cliffs also presented new information directly pertaining to the criteria for determining BART limits. Cliffs stated that the United Taconite facility had been designed to handle and burn eastern bituminous coal, not the low sulfur, western subbituminous coals from the Powder River Basin (PRB) that Cliffs would be required to use to meet the 0.60% sulfur content limit. For example, PRB coal is more prone to explosion and fire and has a lower heat value than eastern bituminous coal. These differences, among others, would require Cliffs to expend significant costs to change operations, address safety issues, and increase the amount of coal required to be burned to meet furnace and pellet temperature requirements.

The information that Cliffs presented pertains to the feasibility and costs of implementing the sulfur limit, which are criteria to be used in determining BART. Therefore, the information provided by Cliffs after the close of the comment period is of central relevance to the outcome of the 2013 Taconite FIP. On this basis, we granted reconsideration of the 0.60% sulfur limit on coal combusted at United Taconite.

*B. Tilden*

1. $NO_X$ Emission Limit

EPA determined the $NO_X$ emission limits for BART in the 2013 Taconite FIP primarily from data arising from the installation of high-stoich LNBs at U.S. Steel's Minntac furnaces 6 and 7. Although the Tilden furnace and the Minntac furnaces are all grate-kiln furnaces, Cliffs provided new information after the close of the comment period that described various differences between the furnaces. These differences included the structure of the kiln, the use of pre-heaters, and the ore and pellet types processed. Cliffs indicated that because of these differences, the installation of high-stoich LNBs at Tilden would likely result in the impairment of pellet quality and production, as well as increased fuel usage and emissions. Cliffs subsequently provided a modeling analysis that detailed the impacts arising from the installation of high-stoich LNBs at Tilden.

Cliffs submitted a declaration by Eric Wagner (of Metso) dated November 26, 2013, which describes the differences relevant to $NO_X$ emissions between U.S. Steel's Minntac furnaces 6 and 7, upon which the 2013 Taconite FIP $NO_X$ limits were based, and Cliffs' grate-kiln furnaces at Tilden. The declaration describes several differences that EPA believes are relevant to the development of BART $NO_X$ emission limits. For example, whereas Tilden uses a single large kiln burner, Minntac furnaces 6 and 7 operate preheat burners, which supply about one third of the heat input from fuel, in addition to a large kiln burner. The smaller preheat burners at Minntac achieve very low $NO_X$ rates (0.1–0.3 lbs/MMBtu) due to a more favorable $NO_X$ reduction combustion environment in the preheat zone as compared to the firing end of the kiln. Correspondingly, the lower $NO_X$ emissions from the preheaters result in a lower combined $NO_X$ emission rate than the emissions arising from a large single kiln LNB.

Another example in the declaration notes that the ore processed at the facilities is different, resulting in different heat values. U.S. Steel's Minntac facility processes an ore high in magnetite that contributes heat to the kiln when oxidized. Correspondingly, by processing high magnetite ore at Minntac furnaces 6 and 7, U.S. Steel is able to effectively use ported kilns to maximize the benefit of the ore. Ported kilns allow the introduction of additional air directly to the kilns, which helps oxidize the high magnetite ore and changes the heat balance of the

furnace. In contrast, Tilden primarily processes hematite, which is not a source of heat for kilns. Correspondingly, Tilden cannot effectively use ported kilns. Because ported kilns change the heat balance of the furnace, U.S. Steel's experience with high-stoich LNBs at the Minntac furnaces may not be directly applicable to the Tilden furnace.

A final example from the declaration states that the application of high-stoich LNB technology at Tilden would require additional air to reduce burner flame temperature, which would result in increased airflow through the grate drying section and increased pressure drop across the greenballs. This higher bed pressure would result in deformed pellets and reduced pellet quality. Further, the increased air flow would also likely cause pellet breakage which would reduce production. The declaration notes that to likely avoid these impacts, Tilden would have to limit the dryer section air flow and drying rate by reducing the amount of recovered heat from the cooler. However, any unrecovered heat would have to be replaced with additional heat from the burner, with corresponding increased fuel usage and emissions.

In addition to the submission of the November 26, 2013 declaration, Cliffs provided modeling and technical analyses that supported the comments made in the declaration. In reports prepared by Metso dated September 14, 2012, and January 13, 2015, Cliffs provided technical analyses for applying LNB technology to the Tilden Line 1 grate kiln through modeling simulations that compare current operations to operations using high-stoich LNBs. Current operating conditions at Tilden 1 were simulated using such factors as existing air flow studies, operating parameters, and feed mineralogy. This baseline model was then modified to simulate LNB operating conditions. The current operating parameters and anticipated high-stoich LNB operating conditions were then compared.

High-stoich LNBs reduce $NO_X$ emissions by introducing comparatively large amounts of cooler ambient air through the main burner. Less $NO_X$ is produced at lower temperatures. The FIP $NO_X$ limits were established based upon high-stoich LNBs operating with air flow at 100 percent of stoichiometric through the primary burner. Tilden currently operates with primary combustion air at 15.5 percent of stoichiometric, and Metso estimated that primary combustion air at 100 to 110 percent of the stoichiometric rate is required to meet the 2013 Taconite FIP limits. Metso performed three simulations in which it maintained peak pellet temperature and final product temperature. The total air supplied to the cooler was adjusted as needed to maintain final product temperature across all three simulations. These simulations were intended to isolate the effects of various process parameters when applying high-stoich LNB technology to Tilden 1.

The analysis indicated, among other things, that high-stoich LNB technology would alter the flame temperature profile, which may adversely affect pellet quality, and that the fuel usage rate would increase by approximately 25 to 35 percent. Further, higher temperatures and air flow rates through the grate would result in a 10 to 20 percent increase in exhaust gas volumes.

The Metso comparative analysis dated January 2015 applies current operating data to the high-stoich LNB design conditions, required for $NO_X$ reduction, provided by COEN Company (COEN), a burner manufacturer, in its Final Report for Tilden Line 1. The engineering simulations held key process parameters constant, including pellet production rate, greenball moisture, bentonite, and flux rate. The total air supplied to the cooler was adjusted as needed to maintain final product temperature across all simulations. Maintaining these parameters ensures that fuel changes are not due to altered processing requirements.

The engineering simulations and comparisons reveal a number of significant operational and environmental impacts arising from the installation of a COEN high-stoich LNB. These impacts include a significant change to the use of primary and secondary cooling air, which will alter the cooling down cycle of pellets, create an imbalance between primary and secondary cooling, and likely affect pellet quality. The volume of secondary cooling air exiting the cooler vent stack is projected to increase between 415 and 360 percent. This may adversely affect the process and pellet quality and also increase dust loading. Further, the increase in unheated primary combustion air to the burner will require an increase in fuel to replace the heat not used from heated secondary combustion air. It is expected that this will result in an increase in the fuel rate from between 21 to 28 percent. In addition, the high-stoich LNB will alter the flame temperature profile, which may affect pellet quality.

The information provided by Cliffs in its petition for reconsideration and subsequent submittals arose from recent, time-consuming research and analysis that could not have been completed and made available during the public comment period. Therefore, Cliffs has met the first requirement of the criteria for reconsideration set forth in section 307(d)(7)(B) of the CAA. Significantly, the information that Cliffs provided is of central relevance to the outcome of the 2013 Taconite FIP. EPA extensively based its $NO_X$ BART analysis on the results arising from the installation of high-stoich LNBs at U.S. Steel's Minntac furnaces 6 and 7. Step one of a BART analysis requires the identification of all available retrofit control technologies. Step two of a BART analysis requires the elimination of technically infeasible control technologies. The new information provided by Cliffs directly bears on the selection and feasibility of high-stoich LNBs for use in the grate-kiln indurating furnace at the Tilden facility. On this basis, we granted reconsideration of the $NO_X$ determination for Tilden (grate-kiln line 1) and for the corresponding emission limits and compliance schedule.

2. $SO_2$ Emission Limit

The 2013 Taconite FIP required the Tilden grate-kiln Line 1 to burn 100% natural gas. However, although mentioned in discussions with Cliffs, this requirement had not been proposed before the final rule. Therefore, it was impracticable for Cliffs to comment on the final BART requirement to burn solely natural gas.

Cliffs more recent intent to burn mixed fuels at Tilden is new information that we did not consider in determining BART for Tilden. The burning of mixed fuels will significantly increase $SO_2$ emissions, resulting in Cliffs' inability to meet the BART limit. Therefore, the new information is of central relevance to the outcome of the 2013 Taconite FIP. On this basis, we granted reconsideration to the 2013 Taconite FIP requirement to burn only natural gas at the Tilden grate-kiln Line 1.

*C. ArcelorMittal Minorca Mine and Hibbing Taconite: $NO_X$ Limit*

The 2013 Taconite FIP established $NO_X$ emission limits for both grate-kiln and straight-grate kiln taconite furnaces. The limits that EPA developed were based solely upon the performance of high-stoich LNBs installed at two of U.S. Steel Minntac's grate-kilns. However, as explained above, there are significant differences between straight-grate kiln and grate-kiln furnaces that must be considered in setting emissions limits.

ArcelorMittal's Minorca taconite facility and the Hibbing taconite facility, which is jointly owned by Cliffs, ArcelorMittal, and U.S. Steel, operate straight-grate furnaces that are required to meet the 1.2 lbs $NO_X$/MMBT BART limit under the 2013 Taconite FIP. In the petitions for reconsideration submitted by ArcelorMittal and Cliffs, the petitioners provided new information directly bearing on the criteria used to establish BART $NO_X$ limits. Their comments reflected similar issues to those that Cliffs presented in its analysis of grate-kiln furnaces at the United Taconite and Tilden facilities, including cost, increased fuel usage, the potential impact on production, and the feasibility of meeting the BART $NO_X$ limit. Further, it is significant that at the time of promulgation of the 2013 Taconite FIP, no LNB had been installed on a straight grate furnace. Correspondingly, ArcelorMittal reported that none of the vendors it had contacted were willing to guarantee the successful installation or operation of a LNB on a straight-grate furnace.

The information provided by ArcelorMittal and Cliffs in their petitions for reconsideration and subsequent submittals arose from recent, time-consuming research and analysis that was not and could not have been completed and made available during the public comment period. Therefore, they have met the first requirement of the criteria for reconsideration set forth at section 307(d)(7)(B) of the CAA. The new information provided by the petitioners directly addresses the costs and feasibility of LNB controls, which are criteria to be used in determining BART. The cost and feasibility of the LNB controls are of central relevance to the outcome of the 2013 Taconite FIP. On this basis, we granted reconsideration to the $NO_X$ BART limits for straight grate taconite furnaces at the ArcelorMittal Minorca facility and the Hibbing facility.

## VI. Basis for Proposed Revisions to 2013 Taconite FIP Requirements

### *A. Revised BART Determinations*

#### i. United Taconite and Tilden Grate-Kilns—Five Step BART Evaluation for $NO_X$

##### (1) Step 1: Identify All Available Retrofit Control Technologies

As discussed in the August 15, 2012 proposed FIP, the following control technologies were identified: external flue gas recirculation, low-$NO_X$ burners, induced flue gas recirculation burners, energy efficiency projects, ported kilns, and selective catalytic reduction (SCR). High-stoich and low-stoich low-$NO_X$ burners were subsequently considered separately.

##### (2) Step 2: Eliminate Technically Infeasible Options

External flue gas recirculation and induced flue gas recirculation burners were eliminated from consideration since they are technically infeasible for the specific application to pellet furnaces due to the high oxygen content of the flue gas. Energy efficiency projects were eliminated due to the difficulty of assigning a general potential emission reduction for this category. EPA agrees that SCR controls are infeasible for indurating furnaces based on two SCR vendors declining to bid on $NO_X$ reduction testing at Minntac. The following three Metso reports provide detailed analyses of expected adverse impacts of using high-stoich LNBs, which are in use at U.S. Steel Minntac, on both pellet quality and increased fuel use: an August 7, 2014, report entitled ''Technical Analysis for applying LNB technology to United Taconite Line 2 Grate-Kiln,'' a September 14, 2012 report titled ''Technical Analysis for Appling LNB Technology to Tilden 1 Grate Kiln System,'' and a January 13, 2015 report titled ''Technical Analysis for Tilden Phase III Additional Simulations while Applying COEN LNB Technology.'' A summary of the results from these Metso reports is contained in an August 13, 2015 technical support document.

A mass emission rate comparison between high-stoich and low-stoich LNB options was presented by Metso, during a July 28, 2014 meeting between EPA and Cliffs and summarized in a subsequent August 8, 2014 letter to EPA. Metso's analysis compared the amount of $NO_X$ that would be generated when a furnace is retrofitted with a high-stoich LNB and low-stoich staged combustion LNB options. This analysis demonstrated that although the lbs $NO_X$/MMBtu may be lower from a high-stoich burner, the high-stoich LNB will require more fuel (and BTUs) and result in higher $NO_X$ emissions. A more detailed discussion of this analysis is contained in an August 13, 2015 technical support document.

The declaration by Eric Wagner (of Metso) dated November 26, 2013 consists mainly of a description of differences relevant to $NO_X$ emissions between U.S. Steel's Minntac furnaces 6 and 7, upon which the 2013 Taconite FIP $NO_X$ limits were based, and Cliffs' grate-kiln furnaces at Tilden and United Taconite. The declaration noted these differences:

—Minntac furnaces 6 and 7 operate preheat burners, which supply about one third of the heat input from fuel, in addition to the large kiln burner. United Taconite and Tilden use a single kiln burner. These smaller preheat burners can achieve very low $NO_X$ rates (0.1–0.3 lbs/MMBtu) due to a more favorable $NO_X$ reduction combustion environment in the preheat zone as compared to the firing end of the kiln. These lower $NO_X$ emissions produce a lower combined $NO_X$ rate than from the large kiln LNB.

—Minntac furnaces 6 and 7 process high magnetite ore that contributes heat to the kiln when oxidized. Tilden's ores are primarily hematite, which is not a source of heat for the kilns, and United Taconite processes ores with a lower concentration of magnetite than Minntac. Therefore, Tilden and United Taconite's furnaces must add more fuel to achieve final product requirements than Minntac. The associated energy penalties are predicted to remain 25–45 percent for Cliffs' grate-kiln furnaces even after energy efficiency improvements at United Taconite and Tilden.

—Minntac furnaces 6 and 7 use ported kilns to maximize the benefit of their high magnetite ore bodies. Ported kilns allow the introduction of additional air directly to the kilns where it helps to oxidize the high magnetite ore that Minntac processes. United Taconite and Tilden do not use ported kilns because porting will not produce significant benefits for the type of ore they process. Ported kilns significantly change the heat balance of the furnace, making it difficult to generalize from Minntac's experience.

—Minntac furnaces 6 and 7 are also unique because they produce high flux magnetite pellets. By contrast, United Taconite produces primarily standard (low flux) magnetite pellets, and Tilden produces high flux hematite pellets. Retrofitting a furnace with the Coen-type high-stoich LNB burner introduces more air, requires more fuel, and at different locations. As a result, the high-stoich LNB retrofit must be evaluated in the context of the unique furnace design for that specific pellet product from that specific ore type. The Minntac experience cannot therefore be generalized to other furnaces.

—The application of high-stoich LNB technology at Tilden and United Taconite would require additional air to reduce burner flame temperature, which would result in increased airflow through the grate drying

section and increased pressure drop across the greenballs. This higher bed pressure would result in deformed pellets and reduced pellet quality. The increased air flow would also cause pellet breakage leading to decreased production. In order to maintain pellet quality and production rate, the overall dryer section air flow and drying rate must be limited by reducing the amount of recovered heat from the cooler. This unrecovered heat must be replaced with additional burner fuel, further increasing fuel requirements.

EPA agrees with the results of the Metso reports and declaration and have therefore determined that high-stoich LNBs are technically infeasible for the United Taconite and Tilden grate-kilns. Low-stoich grate-kilns remain technically feasible for grate-kilns.

(3) Step 3: Evaluate Control Effectiveness of Remaining Control Technologies

Low-stoich burners, as designed by FCT Combustion (FCT), are expected to avoid the previously described drawbacks from high-stoich burners and can be designed to meet 2.8 lbs/MMBtu when burning natural gas and 1.5 lbs/MMBtu when burning a gas/coal mix. This technology is described in the ''FCT Combustion Cliffs UTAC Line 2 Phase 3 Modeling Report'' and August 8, 2014 letter from Douglas McWilliams. FCT supplies a LNB, called the FCT COMBUSTION Gyro-Therm MKII burner. This FCT low-stoich Gyro-Therm burner design achieves $NO_X$ reductions by reducing flame temperature by mixing fuel and air to simulate the effects of staged combustion for $NO_X$ reduction. This burner uses a special gas nozzle that injects the gas in a stirring type of motion. The fluid mechanics resulting from use of this nozzle create a dramatically different flame and $NO_X$ is greatly reduced through natural staging of the fuel-air mixing. This FCT low-stoich LNB would not require additional primary air, which would eliminate the air velocity and pressure contributions to pellet quality problems. FCT's proposed low-stoich burner also does not require substantial additional fuel because it is not introducing cool primary air that must be heated to sustain critical furnace temperatures.

FCT performed CFD modeling at United Taconite in order to design a new burner that will reduce $NO_X$, but maintain product quality, production and optimize fuel efficiency. The modeling for combusting solely natural gas indicated a reduction from a base case of 5.3–6.4 lb $NO_X$/MMBtu to 2.91 lbs $NO_X$/MMBtu; the modeling for co-firing at 30 percent gas and 70 percent coal indicated a reduction from a base case of 1.6–5.4 (although the upper bound is generally closer to 2.8 lbs/MMBtu), with a typical baseline value of 2.5 lbs/MMBtu, to 2.04 lbs $NO_X$/MMBtu. The $NO_X$ reduction technology appropriate for United Taconite would also be appropriate for Tilden (and vice versa) because they have similar grate-kilns.

(4) Step 4: Evaluate Impacts of Remaining Control Technologies

There will be an estimated total of 3000 tons per year of $NO_X$ reductions from the use of the low-stoich technology at Tilden and United Taconite. There are no significant costs or environmental impacts associated with this technology that would necessitate its elimination from consideration as BART.

(5) Step 5: Evaluate Visibility Impacts

There is about a 16% overall decrease in the amount of $NO_X$ and $SO_2$ reductions anticipated as a result of the control technologies (and resulting emission limits) required by this rulemaking, as compared to the 2013 FIP. EPA finds that the candidate BART technologies would be expected to achieve substantial visibility improvements, although slightly less than what would be achieved from the 2013 FIP by an amount roughly corresponding to the decrease in emission reductions.

(6) Propose BART

In EPA's view, the CFD modeling that FCT has conducted provides the best currently available evidence as to the $NO_X$ emission levels that this technology will achieve. According to this modeling and engineering reports provided by (the burner manufacturer) Coen, a low-stoich burner can be designed to meet 2.8 lbs/MMBtu when burning natural gas and 1.5 lbs/MMBtu when burning a gas/coal mix. BART requires that the burners be designed to meet these limits and we expect that these limits will be met. However, because of the lack of experience with these low-stoich burners, including their impact on pellet quality, we are proposing to increase the final limits up to 3.0 lbs/MMBtu when burning natural gas only, and up to 2.5 lbs/MMBtu when burning a gas/coal mix if a rigorous demonstration is made that the 2.8 lbs/MMBtu and 1.5 lbs/MMBtu limits cannot be met.

ii. Hibbing Taconite and ArcelorMittal Minorca Mine Straight-Grate Kilns—Five Step BART Evaluation for $NO_X$

(1) Step 1: Identify All Available Retrofit Control Technologies

As discussed in the August 15, 2012 proposed FIP, the following control technologies were identified: external flue gas recirculation, low-$NO_X$ burners (including both high-stoich and low-stoich), induced flue gas recirculation burners, energy efficiency projects, ported kilns, and selective catalytic reduction (SCR). Water injection in the preheat zone, a pre-combustion approach at the main burners and steam injection to the fuel stream were subsequently considered technologies.

(2) Step 2: Eliminate Technically Infeasible Options

External flue gas recirculation and induced flue gas recirculation burners were eliminated from consideration because they are technically infeasible for the specific application to pellet furnaces due to the high oxygen content of the flue gas. Energy efficiency projects were eliminated due to the difficulty of assigning a general potential emission reduction for this category. EPA agrees that SCR controls are infeasible for indurating furnaces based on two SCR vendors declining to bid on $NO_X$ reduction testing at Minntac.

In addition, LNBs were eliminated from consideration due to the technical challenges associated with their installation and operation on the straight-grate kilns at Minorca Mine and Hibbing, which we explained in detail in section V above—especially the fact that high-stoich burners have never been used on any straight-grate kilns. Low-stoich burners have also been eliminated from consideration because they have never been used on straight-grate kilns and also because they would be expected to result in higher $NO_X$ emissions than the technologies being assessed by ArcelorMittal. As described in more detail below, water injection in the preheat zone, a pre-combustion approach at the main burners, and steam injection to the fuel stream are considered to be feasible technologies.

(3) Step 3: Evaluate Control Effectiveness of Remaining Control Technologies

ArcelorMittal has retained engineering firms to assess $NO_X$ reduction technologies for Minorca's straight-grate indurating furnace. The results of this assessment are described in an August 11, 2014 report titled ''ArcelorMittal Straight-Grate $NO_X$

Reduction Technology Development Efforts.'' Testing has revealed that $NO_X$ can be reduced using water injection in the preheat and the main burners, although it is significantly more effective at reducing $NO_X$ in the preheat burners than the main burners. Additional options for $NO_X$ reduction at straight grate furnaces are: pre-combustion optimizations, steam injection, and multiple point injection. The viability of these options will be based on $NO_X$ reduction potential, impacts to pellet quality and process, installation and operational downtime, and any energy penalty and capital and operating costs.

Test results have raised the prospect of optimizing $NO_X$ reductions using both water injection in the preheat zone (where it appears more effective) and a pre-combustion approach at the main burners. This approach resulted in a 70% or greater reduction on a lbs/MMBtu basis. Efforts have also been made to evaluate steam injection to the fuel stream, which has the potential to provide better mixing in the flame zone with increasing $NO_X$ reductions where distribution concerns exist. Another alternative to reduce $NO_X$ formation at the main combustion chambers is through a number of smaller ''surface spray'' injectors.

In conclusion, combined modeling indicates that water injection in the preheat zone, a pre-combustion approach at the main burners and steam injection to the fuel stream technologies can reasonably be expected to achieve a 70% $NO_X$ reduction on a lbs/MMBtu basis. EPA expects these technologies to be equally effective at reducing $NO_X$ emissions at Hibbing as well as at Minorca Mine.

(4) Step 4: Evaluate Impacts of Remaining Control Technologies

There will be a total estimated 7,400 tons per year of $NO_X$ reductions from water injection in the preheat zone, a pre-combustion approach at the main burners, and steam injection to the fuel stream at Minorca Mine and Hibbing. There are no significant costs or environmental impacts associated with these control technologies.

(5) Step 5: Evaluate Visibility Impacts

There is about a 16% overall decrease in the amount of $NO_X$ and $SO_2$ reductions anticipated as a result of the control technologies (and resulting emission limits) required by this rulemaking, as compared to the 2013 FIP. EPA finds that the candidate BART technologies would be expected to achieve substantial visibility improvements, although slightly less than what would be achieved from the 2013 FIP by an amount roughly corresponding to the decrease in emission reductions.

(6) Propose BART

Based upon the engineering report prepared for ArcelorMittal in which the use of water and steam injection and pre-combustion technologies is described, EPA is confident that ArcelorMittal Minorca Mine and Hibbing Taconite can meet a limit of 1.2 lbs $NO_X$/MMBtu. BART requires that these technologies be designed to meet a limit of 1.2 lbs/MMBtu and we expect that these limits will be met. However, because the particular combination of water and steam injection and pre-combustion technologies being considered has not previously been used on straight-grate kilns, and there is some uncertainty with respect to their effect on pellet quality, we are proposing to increase the final limit up to 1.8 lbs/MMBtu if a rigorous demonstration is made that the 1.2 lbs/MMBtu limit cannot be met.

iii. United Taconite—Five Step BART Evaluation for $SO_2$

(1) Step 1: Identify All Available Control Technologies

Flue gas desulfurization (FGD) and use of low sulfur fuels are the most appropriate available technologies.

(2) Step 2: Eliminate Technically Infeasible Options

FGD and use of low sulfur fuels are both technically feasible.

(3) Step 3: Evaluate Control Effectiveness of Remaining Control Technologies

FGD can achieve 90 percent control and the reduction from the use of low sulfur fuels varies depending upon the fuel mix and the sulfur content of the fuel.

(4) Step 4: Evaluate Impacts of Remaining Control Technologies

Dry FGD can achieve $SO_2$ reductions of about 3600 tons per year from lines 1 and 2. Based upon information supplied by Cliffs in its response to comments on the proposed 2013 Taconite FIP, EPA subsequently determined the annualized dollars per ton for FGD controls to be $5,911/ton for Line 1 and $5,303/ton for Line 2. These cost-effectiveness values were based upon prior baseline $SO_2$ emission levels. In light of the reduction in $SO_2$ emissions that will result from the use of low-sulfur fuels at United Taconite, the cost effectiveness of additional controls has increased to $12,021 per ton for Line 1 and $7,680 per ton for Line 2. Thus, EPA believes that the installation of such controls is not economically feasible.

United Taconite subsequently proposed an alternate BART definition based on burning low sulfur fuels, including increased use of natural gas. This alternative will result in about 1,900 tons per year of $SO_2$ reductions. There are no other significant impacts or costs associated with this alternative.

(5) Step 5: Evaluate Visibility Impacts

There is about a 16% overall decrease in the amount of $NO_X$ and $SO_2$ reductions anticipated as a result of the control technologies (and resulting emission limits) required by this rulemaking, as compared to the 2013 FIP. EPA finds that the candidate BART technologies would be expected to achieve substantial visibility improvements, although slightly less than what would be achieved from the 2013 FIP by an amount roughly corresponding to the decrease in emission reductions.

(6) Propose BART

The proposed BART is based on burning low sulfur fuels, including increased use of natural gas, sufficient to meet a Federally enforceable aggregate emission limit of 529 lbs $SO_2$/hr, based on a 30-day rolling average. This alternative will result in about 1900 tons per year of $SO_2$ reductions. In addition to the emission limit proposed by Cliffs, to ensure the use of low-sulfur fuels and $SO_2$ reductions resulting from the use of low-sulfur fuels at United Taconite, EPA is also establishing a limitation on the coal to be used by requiring the coal have a sulfur content no greater than 1.50 percent sulfur by weight based on a monthly block average.

The 529 lbs $SO_2$/hour and 1.5 percent sulfur limit constitute BART because of the economic infeasibility of FGD controls and also because the facility is not designed to handle lower sulfur coal.

iv. Tilden—Five Step BART Evaluation for $SO_2$

(1) Step 1: Identify All Available Control Technologies

FGD and use of low sulfur fuels are the most appropriate available technologies.

(2) Step 2: Eliminate Technically Infeasible Options

FGD and use of low sulfur fuels are both technically feasible.

(3) Step 3: Evaluate Control Effectiveness of Remaining Control Technologies

FGD can achieve 90 percent control and the reduction from the use of low sulfur fuels varies depending upon the fuel mix and the sulfur content of the fuel.

(4) Step 4: Evaluate Impacts of Remaining Control Technologies

Dry FGD can achieve $SO_2$ reductions of about 1100 tons per year from Tilden's line 1. In its September 28, 2012 comments on the proposed 2013 Taconite FIP, Cliffs documented dry FGD costs of between $11,450 and $15,750 per ton of $SO_2$ removed. These costs are not economically reasonable.

The use of low sulfur fuels, consisting of the use of either natural gas or coal with no more than 0.6 percent sulfur, is expected to result in a reduction in $SO_2$ emissions of about 300 tons per year from baseline conditions. There are no significant costs or energy impacts associated with use of these low sulfur fuels.

(5) Step 5: Evaluate Visibility Impacts

There is about a 16% overall decrease in the amount of $NO_X$ and $SO_2$ reductions anticipated as a result of the control technologies (and resulting emission limits) required by this rulemaking, as compared to the 2013 FIP. EPA finds that the candidate BART technologies would be expected to achieve substantial visibility improvements, although slightly less than what would be achieved from the 2013 FIP by an amount roughly corresponding to the decrease in emission reductions.

(6) Proposed BART

BART for $SO_2$ at Tilden's Grate Kiln Line 1 furnace is proposed to be met by the use of low sulfur coal and natural gas. Beginning six months after the effective date of the rule, any coal burned on Tilden Grate Kiln Line 1 shall have no more than 0.60 percent sulfur by weight based on a monthly block average. This furnace shall also meet an initial emission limit of 500 lbs $SO_2$/hr based on a 30-day rolling average beginning six months after the effective date of the rule. The owner or operator must subsequently calculate a permanent lbs $SO_2$/hr mass emission limit based on 12 continuous months of CEMS emissions data.

In light of the reduction in $SO_2$ emissions that will result from the use of low-sulfur fuels at Tilden, it is expected that the dollars per ton of $SO_2$ reduction through FGD would be even higher than previously estimated. Thus, EPA believes that the installation of such controls is no longer economically reasonable. The use of low sulfur fuels is therefore the most viable option and a 0.6 percent sulfur content represents the use of very low sulfur coal. The initial mass limit of 500 lbs/hr is expected to be reduced after obtaining a year's worth of CEMS data.

*B. Compliance Schedule*

The staggered $NO_X$ compliance schedule proposed in this action is generally consistent with the schedule in the February 6, 2013 FIP, as to the number of months to achieve compliance from the effective date of the rule. The main differences are that under this proposed revised FIP, at Tilden, installation of controls is required after 50 months, not the 26 months in the 2013 Taconite FIP, and at ArcelorMittal Minorca Mine, installation of controls is required within 44 months, not 26 months. The following summarizes the dates following the effective date of the final action on reconsideration by which EPA plans to publish notices making the $NO_X$ emission limits effective:

Tilden—60 months
Hibbing Line 1—37 months
Hibbing Line 2—55 months
Hibbing Line 3—60 months
United Taconite Line 2—55 months
United Taconite Line 1—37 months
ArcelorMittal—55 months

The staggered schedule is necessary because there is a limited downtime each year for each furnace during which the low $NO_X$ burner(s) can be installed without interfering with production, experience gained on the earlier installations can be applied to the ones installed later, and installation costs may be spread out.

The staggered schedule, including additional time at Tilden and ArcelorMittal, is even more necessary for the proposed revisions to the 2013 Taconite FIP because, although the $NO_X$ controls that are expected to be implemented as a result of the settlement agreement and this proposed action have been subject to extensive engineering studies, they have not been used on taconite furnaces in the US. There will also be an eight month period after installation of controls during which emission and pellet quality data will be evaluated and a subsequent three month period during which a final emission limit will be set by EPA based upon this data. The controls are being designed to meet the lower end of the range and it is expected that the limits will be set close to the lower end. The actual limit will be based upon the UPL statistical test.

*C. Averaging Times*

The limits in the 2013 Taconite FIP were expressed in terms of a 30-day average. A 30-day period in many cases would involve both operation with only natural gas and operation with at least some firing of coal. EPA prefers to require the companies to meet the limits with a coal/gas mix and with only natural gas independently, rather than imposing a variable limit computed as a composite of the limits with a gas/coal mix and with only natural gas weighted according to time in each operating mode. Therefore, EPA is proposing to require separate compliance with two limits. One of these limits would govern the emissions averaged over 720 successive hours in which the unit burns only natural gas. The other limit would govern emissions averaged over the 720 successive hours in which the unit burns a gas/coal mix. These 720-hour rolling average would correspond to a 30-day rolling average, as used in the 2013 Taconite FIP, in cases when the fuel use remains either natural gas or a gas/coal mix over 30 days. However, a 720-hour rolling average ensures that the $NO_X$ emission rate will be properly compared with the appropriate fuel based limit.

An example helps illustrate the nature of these limits. Suppose that a subject facility burns only natural gas on Days 1–12, burns a coal/gas mix on Days 13–16, burns gas again on Days 17–30, does not operate on Days 31 and 32, burns gas on Days 33–40, then burns a coal/gas mix from Days 41–70. This example assumes 24 hours/day operation for each operating day. In this case, compliance with the natural gas-based limit would be determined by dividing total $NO_X$ emissions by total heat input for the 720 hours on Days 1–12, Days 17–30, and Days 33–36, as well as on each of the 96 additional sets of 720 successive hours of burning natural gas up to and including the period ending at the end of Day 40. Compliance with the coal or gas/coal mixed fuel limit would be determined by dividing total $NO_X$ emissions by total heat input for the 720 hours on Days 13–16 and Days 41–66, as well as on each of the 96 additional sets of 720 successive hours of burning coal or mixed fuel up to and including the period ending at the end of day 70.

*D. Procedures for Promulgating Revised FIP Limits*

The regulatory text that follows specifies a process for establishing limits to which the identified facilities shall become subject. While the text identifies limits that are to apply, the

text also states that these limits shall become enforceable only after EPA publishes notice either confirming these limits or modifying the limits within a range that EPA is proposing here to establish. The regulatory text also specifies equations that are to be used to establish any adjusted limit. Stated more generally, this action is proposing not just a final action that will initiate a process to lead to establishment of emission limits; today's action is also proposing the criteria for determining the level of the ultimate limits and the procedure by which these limits are to be made enforceable.

EPA is proposing for the publication of the final rule to trigger a number of subsequent requirements for implementing BART controls on the affected taconite plants. Specific dates, defined as a given number of months following the effective date of the final rule, are given for deadlines for commencing operation of CEMS for $NO_X$ and $SO_2$, for submitting a report describing planned $NO_X$ emission controls, for installing the planned $NO_X$ emission controls, for reporting results of pellet quality analyses and simultaneous $NO_X$ emission data, for the source to submit any report recommending confirmation of modification of the emission limit, and for EPA to publish a notice either confirming the limit promulgated in 2016 or establishing an alternate limit (within a range proposed here). The following summarizes the dates following the effective date of the final action on reconsideration by which EPA plans to publish notices making the $NO_X$ emission limits effective:

Tilden—60 months
Hibbing Line 1—37 months
Hibbing Line 2—55 months
Hibbing Line 3—60 months
United Taconite Line 2—55 months
United Taconite Line 1—37 months
ArcelorMittal—55 months

Based on the above schedule, EPA anticipates publishing a notice 37 months (addressing 2 units), 55 months (addressing 3 units), and 60 months (addressing 1 unit) after the effective date of the final rule on reconsideration. In each case, the rulemaking will cause a limit to become enforceable. EPA is proposing here that the limit will be either the limit that is promulgated in the final rule on reconsideration or a revised limit. In either case, EPA anticipates that the limit to which each unit will ultimately be subject will be in accordance with the equations being proposed here, within the upper and lower bounds promulgated in the final rule on reconsideration.

EPA is proposing that these subsequent notices will constitute subsequent final actions to this proposal that require no further opportunity for public comment. Accordingly, today's notice of proposed rulemaking provides adequate information about the basis and timing of the final limits such that no further proposals will be necessary. EPA is taking this approach in order to expedite the establishment of final, enforceable limits for these facilities, within the context of a process that provides reasonable time to design and install emission controls, to obtain data for determining control effectiveness, and to minimize the time then needed to establish final, enforceable limits. Therefore, commenters should provide comments during the comment period for today's proposed rulemaking on any issues that might be anticipated to arise at any point in the process described in this notice, up to and including during the publication of final action as described above establishing confirmed or modified limits as fully enforceable.

The following is an example, based on Hibbing Line 1, of the process for setting the final limit. The limits and schedules vary by line but the steps are the same for all:

1. A presumptive limit of 1.2 lbs/MMBtu, based on a 30-day rolling average, is established.
2. The owner or operator must install CEMS within 6 months of the effective date of the rule.
3. After installation of the CEMS, CEMS data must be submitted to EPA no later than 30 days from the end of each calendar quarter until 34 months from the effective date of the rule.
4. Within 24 months of the effective date a final report must be submitted to EPA containing a detailed engineering analysis and modeling of the $NO_X$ reduction technology (which must be designed to meet 1.2 lbs/MMBtu) being installed.
5. The $NO_X$ reduction control technology must be installed no later than 26 months after the effective date of the rule.
6. Within the earlier of 6 months of the installation of the $NO_X$ reduction control technology or 26 months from the effective date of the rule the results of pellet quality analyses must be provided to EPA no later than 30 days from the end of each calendar quarter pellet quality analyses must be provided to EPA until 34 months from the effective date of the rule. For each pellet quality analysis factor, *e.g.* compression and reducibilty, the following must be provided: (a) The defined acceptable range for each factor as contained in Hibbing's ISO 9001 quality management system, and (b) pellet quality testing results that state the date and time when pellets were produced outside of the defined acceptable range for the indicated pellet quality factors.
7. No later than 34 months after the effective date of the rule, a report may be submitted to EPA either confirming the 1.2 lbs/MMBtu presumptive limit or requesting a modification of the limit up to the upper end of the range (1.8 lbs/MMBtu in this case).
8. The final limit will be based on the CEMS data from the eight month period from the end of month 26 to the end of month 34, excluding any time in which the pellet quality standards are not met. The final limit will be based upon the 95 percent upper predictive limit (UPL). The UPL is a statistical technique that examines an existing set of data points and predicts the chances (*i.e.,* the probability) of future data points (in this case, emission rates). In general terms, the UPL is a value that is calculated from a data set that identifies the emission rate that a source is meeting and would be expected to meet a specified percent of the time that the source is operating. For example, the 95 percent UPL value is the emission level that the source would be predicted to be below during 95 out of 100 hourly intervals. The UPL is calculated using an equation based on the average and variance of a data set, the distribution of the data, and quantity of data points.
9. EPA will take final agency action by publishing its final confirmation or modification of the $NO_X$ limit in the **Federal Register** no later than 37 months after the effective date of the rule.

## VI. Statutory and Executive Order Reviews

### *A. Executive Order 12866: Regulatory Planning and Review*

This proposed action is not a ''significant regulatory action'' under the terms of Executive Order 12866 (58 FR 51735, October 4, 1993) and is therefore not subject to review under Executive Orders 12866 and 13563 (76 FR 3821, January 21, 2011). As discussed in detail in section VI. C below, the proposed FIP applies to only four sources. It is therefore not a rule of general applicability.

### *B. Paperwork Reduction Act*

This proposed action does not impose an information collection burden under the provisions of the Paperwork Reduction Act, 44 U.S.C. 3501 *et seq.* Under the Paperwork Reduction Act, a ''collection of information'' is defined as a requirement for ''answers to . . .

identical reporting or recordkeeping requirements imposed on ten or more persons . . . .'' 44 U.S.C. 3502(3)(A). Because the proposed FIP applies to just six facilities, the Paperwork Reduction Act does not apply. *See* 5 CFR 1320(c).

Burden means the total time, effort, or financial resources expended by persons to generate, maintain, retain, or disclose or provide information to or for a Federal agency. This includes the time needed to review instructions; develop, acquire, install, and utilize technology and systems for the purposes of collecting, validating, and verifying information, processing and maintaining information, and disclosing and providing information; adjust the existing ways to comply with any previously applicable instructions and requirements; train personnel to be able to respond to a collection of information; search data sources; complete and review the collection of information; and transmit or otherwise disclose the information.

An agency may not conduct or sponsor, and a person is not required to respond to a collection of information unless it displays a currently valid Office of Management and Budget (OMB) control number. The OMB control numbers for our regulations in 40 CFR are listed in 40 CFR part 9.

*C. Regulatory Flexibility Act*

The Regulatory Flexibility Act (RFA) generally requires an agency to prepare a regulatory flexibility analysis of any rule subject to notice and comment rulemaking requirements under the Administrative Procedure Act or any other statute unless the agency certifies that the rule will not have a significant economic impact on a substantial number of small entities. Small entities include small businesses, small organizations, and small governmental jurisdictions.

For purposes of assessing the impacts of today's proposed rule on small entities, small entity is defined as: (1) A small business as defined by the Small Business Administration's (SBA) regulations at 13 CFR 121.201; (2) a small governmental jurisdiction that is a government of a city, county, town, school district or special district with a population of less than 50,000; and (3) a small organization that is any not-for-profit enterprise which is independently owned and operated and is not dominant in its field.

After considering the economic impacts of this proposed action on small entities, I certify that this proposed action will not have a significant economic impact on a substantial number of small entities. EPA's proposal adds additional controls to certain sources. The Regional Haze FIP that EPA is proposing for purposes of the regional haze program consists of imposing Federal control requirements to meet the BART requirement for $NO_X$ and $SO_2$ emissions on specific units at three sources in Minnesota and one in Michigan. The net result of the FIP action is that EPA is proposing emission controls on the indurating furnaces at four taconite facilities and none of these sources are owned by small entities, and therefore are not small entities.

*D. Unfunded Mandates Reform Act (UMRA)*

Title II of the Unfunded Mandates Reform Act of 1995 (UMRA), Public Law 104–4, establishes requirements for Federal agencies to assess the effects of their regulatory actions on State, local, and Tribal governments and the private sector. Under section 202 of UMRA, EPA generally must prepare a written statement, including a cost-benefit analysis, for proposed and final rules with ''Federal mandates'' that may result in expenditures to State, local, and Tribal governments, in the aggregate, or to the private sector, of $100 million or more (adjusted for inflation) in any one year. Before promulgating an EPA rule for which a written statement is needed, section 205 of UMRA generally requires EPA to identify and consider a reasonable number of regulatory alternatives and adopt the least costly, most cost-effective, or least burdensome alternative that achieves the objectives of the rule. The provisions of section 205 of UMRA do not apply when they are inconsistent with applicable law. Moreover, section 205 of UMRA allows EPA to adopt an alternative other than the least costly, most cost-effective, or least burdensome alternative if the Administrator publishes with the final rule an explanation why that alternative was not adopted. Before EPA establishes any regulatory requirements that may significantly or uniquely affect small governments, including Tribal governments, it must have developed under section 203 of UMRA a small government agency plan. The plan must provide for notifying potentially affected small governments, enabling officials of affected small governments to have meaningful and timely input in the development of EPA regulatory proposals with significant Federal intergovernmental mandates, and informing, educating, and advising small governments on compliance with the regulatory requirements.

Under Title II of UMRA, EPA has determined that this proposed rule does not contain a Federal mandate that may result in expenditures that exceed the inflation-adjusted UMRA threshold of $100 million by State, local, or Tribal governments or the private sector in any one year. In addition, this proposed rule does not contain a significant Federal intergovernmental mandate as described by section 203 of UMRA nor does it contain any regulatory requirements that might significantly or uniquely affect small governments.

*E. Executive Order 13132: Federalism*

*Federalism* (64 FR 43255, August 10, 1999) revokes and replaces Executive Orders 12612 (Federalism) and 12875 (Enhancing the Intergovernmental Partnership). Executive Order 13132 requires EPA to develop an accountable process to ensure ''meaningful and timely input by State and local officials in the development of regulatory policies that have federalism implications.'' ''Policies that have federalism implications'' is defined in the Executive Order to include regulations that have ''substantial direct effects on the States, on the relationship between the national government and the States, or on the distribution of power and responsibilities among the various levels of government.'' Under Executive Order 13132, EPA may not issue a regulation that has federalism implications, that imposes substantial direct compliance costs, and that is not required by statute, unless the Federal government provides the funds necessary to pay the direct compliance costs incurred by State and local governments, or EPA consults with State and local officials early in the process of developing the proposed regulation. EPA also may not issue a regulation that has federalism implications and that preempts State law unless the Agency consults with State and local officials early in the process of developing the proposed regulation.

This rule will not have substantial direct effects on the States, on the relationship between the national government and the States, or on the distribution of power and responsibilities among the various levels of government, as specified in Executive Order 13132, because it merely addresses the State not fully meeting its obligation to prohibit emissions from interfering with other states measures to protect visibility established in the CAA. Thus, Executive Order 13132 does not apply to this action. In the spirit of Executive Order 13132, and consistent with EPA policy to promote communications between EPA and State and local governments,

EPA specifically solicits comment on this proposed rule from State and local officials.

*F. Executive Order 13175: Consultation and Coordination With Indian Tribal Governments*

Executive Order 13175, entitled *Consultation and Coordination with Indian Tribal Governments* (65 FR 67249, November 9, 2000), requires EPA to develop an accountable process to ensure ''meaningful and timely input by tribal officials in the development of regulatory policies that have tribal implications.'' This proposed rule does not have tribal implications, as specified in Executive Order 13175. It will not have substantial direct effects on tribal governments. Thus, Executive Order 13175 does not apply to this rule. However, EPA did discuss this action in a June 28 conference call with the Michigan and Minnesota Tribes.

*G. Executive Order 13045: Protection of Children From Environmental Health Risks and Safety Risks*

Executive Order 13045: *Protection of Children from Environmental Health Risks and Safety Risks* (62 FR 19885, April 23, 1997), applies to any rule that: (1) Is determined to be economically significant as defined under Executive Order 12866; and (2) concerns an environmental health or safety risk that we have reason to believe may have a disproportionate effect on children. EPA interprets EO 13045 as applying only to those regulatory actions that concern health or safety risks, such that the analysis required under section 5–501 of the EO has the potential to influence the regulation. This action is not subject to EO 13045 because it does not establish an environmental standard intended to mitigate health or safety risks. This proposed action addresses regional haze and visibility protection. Further, because this proposed amendment to the current regulation will require controls that will cost an amount equal to or less than the cost of controls required under the current regulation, it is not an economically significant regulatory action. However, to the extent this proposed rule will limit emissions of $NO_X$, $SO_2$, and PM, the rule will have a beneficial effect on children's health by reducing air pollution.

*H. Executive Order 13211: Actions Concerning Regulations That Significantly Affect Energy Supply, Distribution, or Use*

This action is not subject to Executive Order 13211 (66 FR 28355 (May 22, 2001)), because it is not a significant regulatory action under Executive Order 12866.

*I. National Technology Transfer and Advancement Act*

Section 12 of the National Technology Transfer and Advancement Act (NTTAA) of 1995 requires Federal agencies to evaluate existing technical standards when developing a new regulation. To comply with NTTAA, EPA must consider and use ''voluntary consensus standards'' (VCS) if available and applicable when developing programs and policies unless doing so would be inconsistent with applicable law or otherwise impractical.

VCS are inapplicable to this action because application of those requirements would be inconsistent with the CAA.

*J. Executive Order 12898: Federal Actions To Address Environmental Justice in Minority Populations and Low-Income Populations*

Executive Order 12898 (59 FR 7629, February 16, 1994), establishes Federal executive policy on environmental justice. Its main provision directs Federal agencies, to the greatest extent practicable and permitted by law, to make environmental justice part of their mission by identifying and addressing, as appropriate, disproportionately high and adverse human health or environmental effects of their programs, policies, and activities on minority populations and low-income populations in the United States.

We have determined that this proposed rule, if finalized, will not have disproportionately high and adverse human health or environmental effects on minority or low-income populations because it increases the level of environmental protection for all affected populations without having any disproportionately high and adverse human health or environmental effects on any population, including any minority or low-income population.

**List of Subjects in 40 CFR Part 52**

Environmental protection, Air pollution control, Incorporation by reference, Intergovernmental relations, Nitrogen dioxide, Particulate matter, Reporting and recordkeeping requirements, Sulfur oxides, Volatile organic compounds.

Dated: September 8, 2015.

**Susan Hedman**

*Regional Administrator, Region 5.*

40 CFR part 52 is proposed to be amended as follows:

## PART 52—APPROVAL AND PROMULGATION OF IMPLEMENTATION PLANS

■ 1. The authority citation for part 52 continues to read as follows:

**Authority:** 42 U.S.C. 7401 *et seq.*

■ 2. Section 52.1183 is amended by revising paragraphs (k), (l), (m), and (n) and adding paragraph (o) to read as follows:

**§ 52.1183 Visibility protection.**

* * * * *

(k) Tilden Mining Company, or any subsequent owner/operator of the Tilden Mining Company facility in Ishpeming, Michigan, shall meet the following requirements:

(1) *$NO_X$ Emission Limits.*

(i) An emission limit of 2.8 lbs $NO_X$/MMBtu, based on a 720-hour rolling average, shall apply to Tilden Grate Kiln Line 1 when burning natural gas, and an emission limit of 1.5 lbs $NO_X$/MMBtu, based on a 720-hour rolling average, shall apply to Tilden Grate Kiln Line 1 when burning coal or a mixture of coal and natural gas. These emission limits will become enforceable 60 months after [EFFECTIVE DATE OF FINAL RULE] and only after EPA's confirmation or modification of the emission limit in accordance with the procedures set forth below.

(ii) Compliance with these emission limits shall be demonstrated with data collected by a continuous emissions monitoring system (CEMS) for $NO_X$. The owner or operator must start collecting CEMS data for $NO_X$ upon [EFFECTIVE DATE OF FINAL RULE] and submit the data to EPA no later than 30 days from the end of each calendar quarter. Any remaining data through the end of the 57th month from [EFFECTIVE DATE OF FINAL RULE], that doesn't fall within a calendar quarter, must be submitted to EPA no later than 7 days from the end of the 57th month. Although CEMS data must continue to be collected, it does not need to be submitted to EPA starting 57 months after [EFFECTIVE DATE OF FINAL RULE].

(iii) No later than 48 months from [EFFECTIVE DATE OF FINAL RULE], the owner or operator must submit to EPA a report, including any final report(s) completed by the selected $NO_X$ reduction technology supplier and furnace retrofit engineer, containing a detailed engineering analysis and modeling of the $NO_X$ reduction control technology being installed on Tilden Grate Kiln Line 1. This report must include a list of all variables that can reasonably be expected to have an impact on $NO_X$ emission control

technology performance, as well as a description of how these variables can be adjusted to reduce $NO_X$ emissions to meet the $NO_X$ design emission limit. This NOx reduction control technology must be designed to meet emission limits of 2.8 lbs $NO_X$/MMBtu when burning natural gas and 1.5 lbs $NO_X$/MMBtu when burning coal or a mixture of coal and natural gas.

(iv) The $NO_X$ reduction control technology shall be installed on Tilden Grate Kiln Line 1 furnace no later than 50 months from the effective date of the rule.

(v) Commencing on the earlier of:

(A) Six months from the installation of the $NO_X$ reduction control technology; or

(B) 50 months from [EFFECTIVE DATE OF FINAL RULE], the owner or operator must provide to EPA the results from pellet quality analyses. The owner or operator shall provide the results from pellet quality analyses no later than 30 days from the end of each calendar quarter up until 57 months after [EFFECTIVE DATE OF FINAL RULE]. Any remaining results through the end of the 57th month, that do not fall within a calendar quarter, must be submitted to EPA no later than seven days from the end of the 57th month. The pellet quality analyses shall include results for the following factors: Compression, reducibility, before tumble, after tumble, and low temperature disintegration. For each of the pellet quality analysis factors, the owner or operator must explain the pellet quality analysis factor, as well as the defined acceptable range for each factor using the applicable product quality standards based upon customers' pellet specifications that are contained in Tilden's ISO 9001 quality management system. The owner or operator shall provide pellet quality analysis testing results that state the date and time of the analysis and, in order to define the time period when pellets were produced outside of the defined acceptable range for the pellet quality factors listed, provide copies of the production logs that document the starting and ending times for such periods. The owner or operator shall provide an explanation of causes for pellet samples that fail to meet the acceptable range for any pellet quality analysis factor. Pellet quality information and data may be submitted to EPA as Confidential Business Information.

(vi) No later than 57 months after [EFFECTIVE DATE OF FINAL RULE], the owner or operator may submit to EPA a report to either confirm or modify the $NO_X$ limits for Tilden Grate Kiln Line 1 within the upper and lower bounds described below. EPA will review the report and either confirm or modify the $NO_X$ limits. If the CEMS data collected during operating periods between months 50 and 57 that both meet pellet quality specifications and proper furnace/burner operation is normally distributed, the limit adjustment determination shall be based on the appropriate (depending upon whether data are statistically independent or dependent) 95% upper predictive limit (UPL) equations in paragraph (o) of this section. If the CEMS data collected during operating periods between months 50 and 57 that both meet pellet quality specifications and proper furnace/burner operation are not normally distributed, the limit adjustment determination shall be based on the non-parametric equation provided in paragraph (o) of this section. The data set for the determination shall exclude periods when pellet quality did not fall within the defined acceptable ranges of the pellet quality factors identified pursuant to paragraph (k)(1)(v) of this section and for any subsequent period when production had been reduced in response to pellet quality concerns consistent with Tilden's ISO 9001 operating standards. Any excluded period will commence at the time documented on the production log demonstrating pellet quality did not fall within the defined acceptable range, and shall end when pellet quality within the defined acceptable range has been re-established at planned production levels, which will presumed to be the level that existed immediately prior to the reduction in production due to pellet quality concerns. EPA may also exclude data where operations are inconsistent with the reported design parameters of the $NO_X$ reduction control technology that were installed.

(vii) EPA will take final agency action by publishing its final confirmation or modification of the $NO_X$ limits in the **Federal Register** no later than 60 months after [EFFECTIVE DATE OF FINAL RULE]. The confirmed or modified $NO_X$ limit for Tilden Grate Kiln Line 1 when burning only natural gas may be no lower than 2.8 lbs $NO_X$/MMBtu, based on a 720-hour rolling average, and may not exceed 3.0 lbs $NO_X$/MMBtu, based on a 720-hour rolling average. The confirmed or modified $NO_X$ limit for Tilden Grate Kiln Line 1 when burning coal or a mixture of coal and natural gas may be no lower than 1.5 lbs $NO_X$/MMBtu, based on a 720-hour rolling average, and may not exceed 2.5 lbs $NO_X$/MMBtu, based on a 720-hour rolling average.

(viii) If the owner or operator submits a report proposing a single $NO_X$ limit for all fuels, EPA may approve the proposed $NO_X$ limit for all fuels based on a 30-day rolling average. The confirmed or modified limit will be established and enforceable within 60 months from [EFFECTIVE DATE OF FINAL RULE].

(2) *$SO_2$ Emission Limits.* A fuel sulfur content limit of no greater than 1.20 percent sulfur content by weight shall apply to fuel combusted in Process Boiler #1 (EUBOILER1) and Process Boiler #2 (EUBOILER2) beginning three months from March 8, 2013. A fuel sulfur content limit of no greater than 1.50 percent sulfur content by weight shall apply to fuel combusted in the Line 1 Dryer (EUDRYER1) beginning 3 months from March 8, 2013. The sampling and calculation methodology for determining the sulfur content of fuel must be described in the monitoring plan required at paragraph (n)(8)(x) of this section.

(3) The owner or operator of the Tilden Grate Kiln Line 1 furnace shall meet an emission limit of 500 lbs $SO_2$/hr based on a 30-day rolling average beginning six months after [EFFECTIVE DATE OF FINAL RULE]. Compliance with these emission limits shall be demonstrated with data collected by a CEMS for $SO_2$. The owner or operator must start collecting CEMS data for $SO_2$ beginning six months after [EFFECTIVE DATE OF FINAL RULE] and submit the data to EPA no later than 30 days from the end of each calendar quarter. The Tilden Grate Kiln Line 1 furnace shall not be limited to natural gas fuel. Beginning 6 months after [EFFECTIVE DATE OF FINAL RULE], any coal burned on Tilden Grate Kiln Line 1 shall have no more than 0.60 percent sulfur by weight based on a monthly block average. The sampling and calculation methodology for determining the sulfur content of coal must be described in the monitoring plan required for this furnace. The owner or operator must calculate an $SO_2$ limit based on twelve continuous months of CEMS emissions data and submit such limit, calculations, and CEMS data to EPA no later than 36 months after [EFFECTIVE DATE OF FINAL RULE]. If the submitted CEMS $SO_2$ hourly data is normally distributed, the $SO_2$ lbs/hr emission rate shall be based on the appropriate (depending upon whether data are statistically independent or dependent) 99% upper predictive limit (UPL) equation. If the submitted CEMS $SO_2$ hourly data is not normally distributed, the $SO_2$ lbs/hr

emission rate shall be based on the non-parametric equation provided in paragraph (o) of this section. Compliance to the $SO_2$ lbs/hr emission rate shall be determined on a 30-day rolling average basis. EPA will take final agency action by publishing a confirmation or modification of the $SO_2$ limit in the **Federal Register** no later than 39 months after [EFFECTIVE DATE OF FINAL RULE]. EPA may adjust the 500 lbs/hr $SO_2$ limit downward to reflect the calculated $SO_2$ emission rate; however, EPA will not increase the $SO_2$ limit above 500 lbs/hr.

(4) Starting 26 months from [EFFECTIVE DATE OF FINAL RULE], records shall be kept for any day during which fuel oil is burned as fuel (either alone or blended with other fuels) in Grate Kiln Line 1. These records must include, at a minimum, the gallons of fuel oil burned per hour, the sulfur content of the fuel oil, and the $SO_2$ emissions in pounds per hour.

(5) Starting 26 months from [EFFECTIVE DATE OF FINAL RULE], the $SO_2$ limit for Grate Kiln Line 1 does not apply for any hour in which it is documented that there is a natural gas curtailment, beyond Cliffs' control, necessitating that the supply of natural gas to Tilden's Line 1 indurating furnace is restricted or eliminated. Records must be kept of the cause of the curtailment and duration of such curtailment. During such curtailment, the use of backup coal is restricted to coal with no greater than 0.60 percent sulfur by weight.

(l) *Testing and Monitoring* (1) The owner or operator shall install, certify, calibrate, maintain and operate a CEMS for $NO_X$ on Tilden Grate Kiln Line 1. Compliance with the emission limits for $NO_X$ shall be determined using data from the CEMS.

(2) The owner or operator shall install, certify, calibrate, maintain and operate a CEMS for $SO_2$ on Tilden Grate Kiln Line 1. Compliance with the emission standard selected for $SO_2$ shall be determined using data from the CEMS.

(3) The owner or operator shall install, certify, calibrate, maintain and operate one or more continuous diluent monitor(s) ($O_2$ or $CO_2$) and continuous flow rate monitor(s) on Tilden Grate Kiln Line 1 to allow conversion of the $NO_X$ and $SO_2$ concentrations to units of the standard (lbs/MMBtu and lbs/hr, respectively) unless a demonstration is made that a diluent monitor and continuous flow rate monitor are not needed for the owner or operator to demonstrate compliance with applicable emission limits in units of the standards.

(4) For purposes of this section, all CEMS required by this regulation must meet the requirements of paragraphs (l)(4)(i) through (xiv) of this section.

(i) All CEMS must be installed, certified, calibrated, maintained, and operated in accordance with 40 CFR part 60, appendix B, Performance Specification 2 (PS–2) and appendix F, Procedure 1.

(ii) All CEMS associated with monitoring $NO_X$ (including the $NO_X$ monitor and necessary diluent and flow rate monitors) must be installed and operational upon [EFFECTIVE DATE OF FINAL RULE]. All CEMS associated with monitoring $SO_2$ must be installed and operational no later than six months after [EFFECTIVE DATE OF FINAL RULE]. Verification of the CEMS operational status shall, as a minimum, include completion of the manufacturer's written requirements or recommendations for installation, operation, and calibration of the devices.

(iii) The owner or operator must conduct a performance evaluation of each CEMS in accordance with 40 CFR part 60, appendix B, PS–2. The performance evaluations must be completed no later than 60 days after the respective CEMS installation.

(iv) The owner or operator of each CEMS must conduct periodic Quality Assurance, Quality Control (QA/QC) checks of each CEMS in accordance with 40 CFR part 60, appendix F, Procedure 1. The first CEMS accuracy test will be a relative accuracy test audit (RATA) and must be completed no later than 60 days after the respective CEMS installation.

(v) The owner or operator of each CEMS must furnish the Regional Administrator two, or upon request, more copies of a written report of the results of each performance evaluation and QA/QC check within 60 days of completion.

(vi) The owner or operator of each CEMS must check, record, and quantify the zero and span calibration drifts at least once daily (every 24 hours) in accordance with 40 CFR part 60, appendix F, Procedure 1, Section 4.

(vii) Except for CEMS breakdowns, repairs, calibration checks, and zero and span adjustments, all CEMS required by this section shall be in continuous operation during all periods of process operation of the indurating furnaces, including periods of process unit startup, shutdown, and malfunction.

(viii) All CEMS required by this section must meet the minimum data requirements at paragraphs (l)(4)(viii)(A) through (C) of this section.

(A) Complete a minimum of one cycle of operation (sampling, analyzing, and data recording) for each successive 15-minute quadrant of an hour.

(B) Sample, analyze and record emissions data for all periods of process operation except as described in paragraph (l)(4)(viii)(C) of this section.

(C) When emission data from CEMS are not available due to continuous monitoring system breakdowns, repairs, calibration checks, or zero and span adjustments, emission data must be obtained using other monitoring systems or emission estimation methods approved by the EPA. The other monitoring systems or emission estimation methods to be used must be incorporated into the monitoring plan required by this section and provide information such that emissions data are available for a minimum of 18 hours in each 24-hour period and at least 22 out of 30 successive unit operating days.

(ix) Owners or operators of each CEMS required by this section must reduce all data to 1-hour averages. Hourly averages shall be computed using all valid data obtained within the hour but no less than one data point in each fifteen-minute quadrant of an hour. Notwithstanding this requirement, an hourly average may be computed from at least two data points separated by a minimum of 15 minutes (where the unit operates for more than one quadrant in an hour) if data are unavailable as a result of performance of calibration, quality assurance, preventive maintenance activities, or backups of data from data acquisition and handling systems, and recertification events.

(x) The 30-day rolling average emission rate determined from data derived from the CEMS required by this section (in lbs/MMBtu or lbs/hr depending on the emission standard selected) must be calculated in accordance with paragraphs (l)(4)(x)(A) through (F) of this section.

(A) Sum the total pounds of the pollutant in question emitted from the Unit during an operating day and the previous 29 operating days.

(B) Sum the total heat input to the unit (in MMBtu) or the total actual hours of operation (in hours) during an operating day and the previous 29 operating days.

(C) Divide the total number of pounds of the pollutant in question emitted during the 30 operating days by the total heat input (or actual hours of operation depending on the emission limit selected) during the 30 operating days.

(D) For purposes of this calculation, an operating day is any day during which fuel is combusted in the BART affected Unit regardless of whether

pellets are produced. Actual hours of operation are the total hours a unit is firing fuel regardless of whether a complete 24-hour operational cycle occurs (*i.e.* if the furnace is firing fuel for only five hours during a 24-hour period, then the actual operating hours for that day are five. Similarly, total number of pounds of the pollutant in question for that day is determined only from the CEMS data for the five hours during which fuel is combusted.)

(E) If the owner or operator of the CEMS required by this section uses an alternative method to determine 30-day rolling averages, that method must be described in detail in the monitoring plan required by this section. The alternative method will only be applicable if the final monitoring plan and the alternative method are approved by EPA.

(F) A new 30-day rolling average emission rate must be calculated for the period ending each new operating day.

(xi) The 720-hour rolling average emission rate determined from data derived from the CEMS required by this section (in lbs/MMBtu) must be calculated in accordance with paragraphs (l)(4)(xi)(A) through (C) of this section.

(A) Sum the total pounds of $NO_X$ emitted from the unit every hour and the previous (not necessarily consecutive) 719 hours for which that type of fuel (either natural gas or mixed coal and natural gas) was used.

(B) Sum the total heat input to the unit (in MMBtu) every hour and the previous (not necessarily consecutive) 719 hours for which that type of fuel (either natural gas or mixed coal and natural gas) was used.

(C) Divide the total number of pounds of $NO_X$ emitted during the 720 hours, as defined above, by the total heat input during the same 720 hour period. This calculation must be done separately for each fuel type (either for natural gas or mixed coal and natural gas).

(xii) Data substitution must not be used for purposes of determining compliance under this regulation.

(xiii) All CEMS data shall be reduced and reported in units of the applicable standard.

(xiv) A Quality Control Program must be developed and implemented for all CEMS required by this section in accordance with 40 CFR part 60, appendix F, Procedure 1, Section 3. The program will include, at a minimum, written procedures and operations for calibration checks, calibration drift adjustments, preventative maintenance, data collection, recording and reporting, accuracy audits/procedures, periodic performance evaluations, and a corrective action program for malfunctioning CEMS.

(m) *Recordkeeping Requirements.* (1)(i) Records required by this section must be kept in a form suitable and readily available for expeditious review.

(ii) Records required by this section must be kept for a minimum of 5 years following the date of creation.

(iii) Records must be kept on site for at least 2 years following the date of creation and may be kept offsite, but readily accessible, for the remaining 3 years.

(2) The owner or operator of the BART affected unit must maintain the records identified in paragraphs (m)(2)(i) through (xi) of this section.

(i) A copy of each notification and report developed for and submitted to comply with this section including all documentation supporting any initial notification or notification of compliance status submitted, according to the requirements of this section.

(ii) Records of the occurrence and duration of each startup, shutdown, and malfunction of the BART affected unit, air pollution control equipment, and CEMS required by this section.

(iii) Records of activities taken during each startup, shutdown, and malfunction of the BART affected unit, air pollution control equipment, and CEMS required by this section.

(iv) Records of the occurrence and duration of all major maintenance conducted on the BART affected unit, air pollution control equipment, and CEMS required by this section.

(v) Records of each excess emission report, including all documentation supporting the reports, dates and times when excess emissions occurred, investigations into the causes of excess emissions, actions taken to minimize or eliminate the excess emissions, and preventative measures to avoid the cause of excess emissions from occurring again.

(vi) Records of all CEMS data including, as a minimum, the date, location, and time of sampling or measurement, parameters sampled or measured, and results.

(vii) All records associated with quality assurance and quality control activities on each CEMS as well as other records required by 40 CFR part 60, appendix F, Procedure 1 including, but not limited to, the quality control program, audit results, and reports submitted as required by this section.

(viii) Records of the $NO_X$ emissions during all periods of BART affected unit operation, including startup, shutdown and malfunction, in the units of the standard. The owner or operator shall convert the monitored data into the appropriate unit of the emission limitation using appropriate conversion factors and F-factors. F-factors used for purposes of this section shall be documented in the monitoring plan and developed in accordance with 40 CFR part 60, appendix A, Method 19. The owner or operator may use an alternate method to calculate the $NO_X$ emissions upon written approval from EPA.

(ix) Records of the $SO_2$ emissions or records of the removal efficiency (based on CEMS data), depending on the emission standard selected, during all periods of operation, including periods of startup, shutdown and malfunction, in the units of the standard.

(x) Records associated with the CEMS unit including type of CEMS, CEMS model number, CEMS serial number, and initial certification of each CEMS conducted in accordance with 40 CFR part 60, appendix B, Performance Specification 2 must be kept for the life of the CEMS unit.

(xi) Records of all periods of fuel oil usage as required in paragraph (k)(4) of this section.

(n) *Reporting requirements.*

(1) All requests, reports, submittals, notifications, and other communications to the Regional Administrator required by this section shall be submitted, unless instructed otherwise, to the Air and Radiation Division, U.S. Environmental Protection Agency, Region 5 (A–18J) at 77 West Jackson Boulevard, Chicago, Illinois 60604. References in this section to the Regional Administrator shall mean the EPA Regional Administrator for Region 5.

(2) The owner or operator of each BART affected unit identified in this section and CEMS required by this section must provide to the Regional Administrator the written notifications, reports and plans identified at (n)(2)(i) through (viii) of this section. If acceptable to both the Regional Administrator and the owner or operator of each BART affected unit identified in this section and CEMS required by this section the owner or operator may provide electronic notifications, reports and plans.

(i) A notification of the date construction of control devices and installation of burners required by this section commences postmarked no later than 30 days after the commencement date.

(ii) A notification of the date the installation of each CEMS required by this section commences postmarked no later than 30 days after the commencement date.

(iii) A notification of the date the construction of control devices and

installation of burners required by this section is complete postmarked no later than 30 days after the completion date.

(iv) A notification of the date the installation of each CEMS required by this section is complete postmarked no later than 30 days after the completion date.

(v) A notification of the startup date for control devices and burners installed as a result of this section postmarked no later than 30 days after the startup date.

(vi) A notification of the startup date for CEMS required by this section postmarked no later than 30 days after the startup date.

(vii) A notification of the date upon which the initial CEMS performance evaluations are planned. This notification must be submitted at least 60 days before the performance evaluation is scheduled to begin.

(viii) A notification of initial compliance, signed by the responsible official who shall certify its accuracy, attesting to whether the source has complied with the requirements of this section, including, but not limited to, applicable emission standards, control device and burner installations, CEMS installation and certification. This notification must be submitted before the close of business on the 60th calendar day following the completion of the compliance demonstration and must include, at a minimum, the information in paragraphs (n)(2)(viii)(A) through (F) of this section.

(A) The methods used to determine compliance.

(B) The results of any CEMS performance evaluations, and other monitoring procedures or methods that were conducted.

(C) The methods that will be used for determining continuing compliance, including a description of monitoring and reporting requirements and test methods.

(D) The type and quantity of air pollutants emitted by the source, reported in units of the standard.

(E) A description of the air pollution control equipment and burners installed as required by this section, for each emission point.

(F) A statement by the owner or operator as to whether the source has complied with the relevant standards and other requirements.

(3) The owner or operator must develop and implement a written startup, shutdown, and malfunction plan for $NO_X$ and $SO_2$. The plan must include, at a minimum, procedures for operating and maintaining the source during periods of startup, shutdown, and malfunction; and a program of corrective action for a malfunctioning process and air pollution control and monitoring equipment used to comply with the relevant standard. The plan must ensure that, at all times, the owner or operator operates and maintains each affected source, including associated air pollution control and monitoring equipment, in a manner which satisfies the general duty to minimize or eliminate emissions using good air pollution control practices. The plan must ensure that owners or operators are prepared to correct malfunctions as soon as practicable after their occurrence.

(4) The written reports of the results of each performance evaluation and QA/QC check in accordance with and as required in paragraph (l)(4)(v) of this section.

(5) *Compliance Reports.* The owner or operator of each BART affected unit must submit semiannual compliance reports. The semiannual compliance reports must be submitted in accordance with paragraphs (n)(5)(i) through (iv) of this section, unless the Regional Administrator has approved a different schedule.

(i) The first compliance report must cover the period beginning on the compliance date that is specified for the affected source through June 30 or December 31, whichever date comes first after the compliance date that is specified for the affected source.

(ii) The first compliance report must be postmarked no later than 30 calendar days after the reporting period covered by that report (July 30 or January 30), whichever comes first.

(iii) Each subsequent compliance report must cover the semiannual reporting period from January 1 through June 30 or the semiannual reporting period from July 1 through December 31.

(iv) Each subsequent compliance report must be postmarked no later than 30 calendar days after the reporting period covered by that report (July 30 or January 30).

(6) Compliance report contents. Each compliance report must include the information in paragraphs (6)(i) through (vi) of this section.

(i) Company name and address.

(ii) Statement by a responsible official, with the official's name, title, and signature, certifying the truth, accuracy, and completeness of the content of the report.

(iii) Date of report and beginning and ending dates of the reporting period.

(iv) Identification of the process unit, control devices, and CEMS covered by the compliance report.

(v) A record of each period of a startup, shutdown, or malfunction during the reporting period and a description of the actions the owner or operator took to minimize or eliminate emissions arising as a result of the startup, shutdown or malfunction and whether those actions were or were not consistent with the source's startup, shutdown, and malfunction plan.

(vi) A statement identifying whether there were or were not any deviations from the requirements of this section during the reporting period. If there were deviations from the requirements of this section during the reporting period, then the compliance report must describe in detail the deviations which occurred, the causes of the deviations, actions taken to address the deviations, and procedures put in place to avoid such deviations in the future. If there were no deviations from the requirements of this section during the reporting period, then the compliance report must include a statement that there were no deviations. For purposes of this section, deviations include, but are not limited to, emissions in excess of applicable emission standards established by this section, failure to continuously operate an air pollution control device in accordance with operating requirements designed to assure compliance with emission standards, failure to continuously operate CEMS required by this section, and failure to maintain records or submit reports required by this section.

(7) Each owner or operator of a CEMS required by this section must submit quarterly excess emissions and monitoring system performance reports to the Regional Administrator for each pollutant monitored for each BART affected unit monitored. All reports must be postmarked by the 30th day following the end of each three-month period of a calendar year (January–March, April–June, July–September, October–December) and must include, at a minimum, the requirements of paragraphs (n)(7)(i)–(xv) of this section.

(i) Company name and address.

(ii) Identification and description of the process unit being monitored.

(iii) The dates covered by the reporting period.

(iv) Total source operating hours for the reporting period.

(v) Monitor manufacturer, monitor model number and monitor serial number.

(vi) Pollutant monitored.

(vii) Emission limitation for the monitored pollutant.

(viii) Date of latest CEMS certification or audit.

(ix) A description of any changes in continuous monitoring systems,

processes, or controls since the last reporting period.

(x) A table summarizing the total duration of excess emissions, as defined in paragraphs (n)(7)(x)(A) through (B) of this section, for the reporting period broken down by the cause of those excess emissions (startup/shutdown, control equipment problems, process problems, other known causes, unknown causes), and the total percent of excess emissions (for all causes) for the reporting period calculated as described in paragraphs (n)(7)(x)(C) of this section.

(A) For purposes of section, an excess emission is defined as any 30-day or 720-hour rolling average period, including periods of startup, shutdown and malfunction, during which the 30-day or 720-hour (as appropriate) rolling average emissions of either regulated pollutant ($SO_2$ and $NO_X$), as measured by a CEMS, exceeds the applicable emission standards in this section.

(B)(*1*) For purposes of this section, if a facility calculates a 30-day rolling average emission rate in accordance with this section which exceeds the applicable emission standards of this section then it will be considered 30 days of excess emissions. If the following 30-day rolling average emission rate is calculated and found to exceed the applicable emission standards of this section as well, then it will add one more day to the total days of excess emissions (*i.e.* 31 days). Similarly, if an excess emission is calculated for a 30-day rolling average period and no additional excess emissions are calculated until 15 days after the first, then that new excess emission will add 15 days to the total days of excess emissions (*i.e.* 30 + 15 = 45). For purposes of this section, if an excess emission is calculated for any period of time within a reporting period, there will be no fewer than 30 days of excess emissions but there should be no more than 121 days of excess emissions for a reporting period.

(*2*) For purposes of this section, if a facility calculates a 720-hour rolling average emission rate in accordance with this section which exceeds the applicable emission standards of this section, then it will be considered 30 days of excess emissions. If the 24th following 720-hour rolling average emission rate is calculated and found to exceed the applicable emission standards of the rule as well, then it will add one more day to the total days of excess emissions (*i.e.* 31 days). Similarly, if an excess emission is calculated for a 720-hour rolling average period and no additional excess emissions are calculated until 360 hours after the first, then that new excess emission will add 15 days to the total days of excess emissions (*i.e.* 30 + 15 = 45). For purposes of this section, if an excess emission is calculated for any period of time with a reporting period, there will be no fewer than 30 days of excess emissions but there should be no more than 121 days of excess emissions for a reporting period.

(C) For purposes of this section, the total percent of excess emissions will be determined by summing all periods of excess emissions (in days) for the reporting period, dividing that number by the total BART affected unit operating days for the reporting period, and then multiplying by 100 to get the total percent of excess emissions for the reporting period. An operating day, as defined previously, is any day during which fuel is fired in the BART affected unit for any period of time. Because of the possible overlap of 30-day rolling average excess emissions across quarters, there are some situations where the total percent of excess emissions could exceed 100 percent. This extreme situation would only result from serious excess emissions problems where excess emissions occur for nearly every day during a reporting period.

(xi) A table summarizing the total duration of monitor downtime, as defined at (n)(7)(xi)(A) of this section, for the reporting period broken down by the cause of the monitor downtime (monitor equipment malfunctions, non-monitor equipment malfunctions, quality assurance calibration, other known causes, unknown causes), and the total percent of monitor downtime (for all causes) for the reporting period calculated as described in paragraph (n)(7)(xi)(B) of this section.

(A) For purposes of this section, monitor downtime is defined as any period of time (in hours) during which the required monitoring system was not measuring emissions from the BART affected unit. This includes any period of CEMS QA/QC, daily zero and span checks, and similar activities.

(B) For purposes of this section, the total percent of monitor downtime will be determined by summing all periods of monitor downtime (in hours) for the reporting period, dividing that number by the total number of BART affected unit operating hours for the reporting period, and then multiplying by 100 to get the total percent of excess emissions for the reporting period.

(xii) A table which identifies each period of excess emissions for the reporting period and includes, at a minimum, the information in paragraphs (n)(7)(xii)(A) through (F) of this section.

(A) The date of each excess emission.

(B) The beginning and end time of each excess emission.

(C) The pollutant for which an excess emission occurred.

(D) The magnitude of the excess emission.

(E) The cause of the excess emission.

(F) The corrective action taken or preventative measures adopted to minimize or eliminate the excess emissions and prevent such excess emission from occurring again.

(xiii) A table which identifies each period of monitor downtime for the reporting period and includes, at a minimum, the information in paragraph (n)(7)(xiii)(A) through (D) of this section.

(A) The date of each period of monitor downtime.

(B) The beginning and end time of each period of monitor downtime.

(C) The cause of the period of monitor downtime.

(D) The corrective action taken or preventative measures adopted for system repairs or adjustments to minimize or eliminate monitor downtime and prevent such downtime from occurring again.

(xiv) If there were no periods of excess emissions during the reporting period, then the excess emission report must include a statement which says there were no periods of excess emissions during this reporting period.

(xv) If there were no periods of monitor downtime, except for daily zero and span checks, during the reporting period, then the excess emission report must include a statement which says there were no periods of monitor downtime during this reporting period except for the daily zero and span checks.

(8) The owner or operator of each CEMS required by this section must develop and submit for review and approval by the Regional Administrator a site specific monitoring plan. The purpose of this monitoring plan is to establish procedures and practices which will be implemented by the owner or operator in its effort to comply with the monitoring, recordkeeping and reporting requirements of this section. The monitoring plan must include, at a minimum, the information in paragraphs (n)(8)(i)–(x) of this section.

(i) Site specific information including the company name, address, and contact information.

(ii) The objectives of the monitoring program implemented and information describing how those objectives will be met.

(iii) Information on any emission factors used in conjunction with the CEMS required by this section to calculate emission rates and a description of how those emission factors were determined.

(iv) A description of methods to be used to calculate emission rates when CEMS data is not available due to downtime associated with QA/QC events.

(v) A description of the QA/QC program to be implemented by the owner or operator of CEMS required by this section. This can be the QA/QC program developed in accordance with 40 CFR part 60, appendix F, Procedure 1, Section 3.

(vi) A list of spare parts for CEMS maintained on site for system maintenance and repairs.

(vii) A description of the procedures to be used to calculate 30-day rolling averages and 720-hour rolling averages and example calculations which shows the algorithms used by the CEMS to calculate 30-day rolling averages and 720-hour rolling averages.

(viii) A sample of the document to be used for the quarterly excess emission reports required by this section.

(ix) A description of the procedures to be implemented to investigate root causes of excess emissions and monitor downtime and the proposed corrective actions to address potential root causes of excess emissions and monitor downtime.

(x) A description of the sampling and calculation methodology for determining the percent sulfur by weight as a monthly block average for coal used during that month.

(o) Equations for Establishing the Upper Predictive Limit

(1) *Equation for Normal Distribution and Statistically Independent Data*

$$UPL = \bar{x} + t_{[(n-1),(0.95)]}\sqrt{s^2\left(\frac{1}{n} + \frac{1}{m}\right)}$$

Where:

$\bar{x}$ = average or mean of test run data;

$t_{[(n-1),(0.95)]}$ = t score, the one-tailed t value of the Student's t distribution for a specific degree of freedom (n–1) and a confidence level (0.95; 0.99 for Tilden $SO_2$)

$s^2$ = variance of the dataset;

$n$ = number of values

$m$ = number of values used to calculate the test average (m = 720 as per averaging time)

(2)(i) To determine if statistically independent, use the Rank von Neumann Test on p. 137 of data Quality Assessment: Statistical Methods for Practitioners EPA QA/G–9S.

(ii) Alternative to Rank von Neumann test to determine if data are dependent, data are dependent if t test value is greater than t critical value, where:

$$t\ test = \frac{\rho}{\sqrt{\frac{1-\rho^2}{n-2}}}$$

ρ = correlation between data points

*t critical* = $t_{[(n-2),(0.95)]}$ = t score, the two-tailed t value of the Student's t distribution for a specific degree of freedom (n–2) and a confidence level (0.95)

(3) If data are dependent then use the following equation.

*Equation for Normal Distribution and Data not Statistically Independent*

$$UPL = \bar{x} + t_{[(n-1),(0.95)]}\sqrt{s^2[1 + (n-1)\rho]\left(\frac{1}{n} + \frac{1}{m}\right)}$$

Where:

ρ = correlation between data points

(4) *Non-parametric Equations for Data Not Normally Distributed*

$m = (n + 1) * \alpha$

$m$ = the rank of the ordered data point, when data is sorted smallest to largest

$n$ = number of data points

α = 0.95, to reflect the 95th percentile

If $m$ is a whole number, then the limit, UPL, shall be computed as:

$UPL = X_m$

Where:

$X_m$ = value of the $m^{th}$ data point in terms of lbs $SO_2$/hr or lbs $NO_X$/MMBtu, when the data is sorted smallest to largest.

If $m$ is not a whole number, the limit shall be computed by linear interpolation according to the following equation.

$UPL = x_m = x_{mi.md} = x_{mi} + 0.m_d\,(x_{mi+1} - x_{mi})$

Where:

$m_i$ = the integer portion of $m$, i.e., $m$ truncated at zero decimal places, and

$m_d$ = the decimal portion of $m$

■ 3. Section 52.1235 is proposed to be amended by revising paragraphs (b)(1)(ii), (b)(1)(iv), (b)(1)(v),(b)(2)(iv), (c), (d), and (e) and by adding paragraph (f) to read as follows:

**§ 52.1235 Regional haze.**

(a) [Reserved]

(b)(1) *$NO_X$ emission limits.*

(i) * * *

(ii) Hibbing Taconite Company.

(A) Hibbing Line 1.

(*1*) An emission limit of 1.2 lbs $NO_X$/MMBtu, based on a 30-day rolling average, shall apply to Hibbing Line 1 when burning natural gas. This emission limit will become enforceable 37 months after [EFFECTIVE DATE OF FINAL RULE] and only after EPA's confirmation or modification of the emission limit in accordance with the procedures set forth below.

(*2*) Compliance with this emission limit will be demonstrated with data collected by a continuous emissions monitoring system (CEMS) for $NO_X$. The owner or operator of Hibbing Line 1 must install a CEMS for $NO_X$ and $SO_2$ within six months from the effective date of the rule. The owner or operator must start collecting CEMS data and submit the data to EPA no later than 30 days from the end of each calendar quarter after that installation deadline. Any remaining data through the end of the 34th month from [EFFECTIVE DATE OF FINAL RULE], that doesn't fall within a calendar quarter, must be

submitted to EPA no later than seven days from the end of the 34th month. Although CEMS data must continue to be collected, it does not need to be submitted to EPA starting 34 months after the effective date of the rule.

(*3*) No later than 24 months after [EFFECTIVE DATE OF FINAL RULE] the owner or operator must submit to EPA a report, including any final report(s) completed by the selected $NO_X$ reduction technology supplier and furnace retrofit engineer, containing a detailed engineering analysis and modeling of the $NO_X$ reduction control technology being installed on Hibbing Line 1. The $NO_X$ reduction control technology must be designed to meet an emission limit of 1.2 lbs $NO_X$/MMBtu. This report must include a list of all process and control technology variables that can reasonably be expected to have an impact on $NO_X$ emissions control technology performance, as well as a description of how these variables can be adjusted to reduce $NO_X$ emissions to meet the $NO_X$ design emission limit.

(*4*) The $NO_X$ reduction control technology shall be installed on Hibbing Line 1 furnace no later than 26 months after [EFFECTIVE DATE OF FINAL RULE].

(*5*) Commencing on the earlier of:

(*i*) Six months from the installation of the $NO_X$ reduction control technology; or

(*ii*) 26 months from [EFFECTIVE DATE OF FINAL RULE], the owner or operator must provide to EPA the results from pellet quality analyses. The owner or operator shall provide the results from pellet quality analyses no later than 30 days from the end of each calendar quarter up until 34 months after [EFFECTIVE DATE OF FINAL RULE]. Any remaining results through the end of the 34th month from [EFFECTIVE DATE OF FINAL RULE], that do not fall within a calendar quarter, must be submitted to EPA no later than seven days from the end of the 34th month. The pellet quality analyses shall include results for the following factors: Compression, reducibility, before tumble, after tumble, low temperature disintegration, and swelling. For each of the pellet quality analysis factors, the owner or operator must explain the pellet quality analysis factor, as well as the defined acceptable range for each factor using the applicable product quality standards based upon customers' pellet specifications that are contained in Hibbing's ISO 9001 quality management system. The owner or operator shall provide pellet quality analysis testing results that state the date and time of the analysis and, in order to define the time period when pellets were produced outside of the defined acceptable range for the pellet quality factors listed, provide copies of the production logs that document the starting and ending times for such periods. The owner or operator shall provide an explanation of causes for pellet samples that fail to meet the acceptable range for any pellet quality analysis factor. Pellet quality information and data may be submitted to EPA as Confidential Business Information.

(*6*) No later than 34 months after [EFFECTIVE DATE OF FINAL RULE], the owner or operator may submit to EPA a report to either confirm or modify the $NO_X$ limits for Hibbing Line 1 furnace within the upper and lower bounds described below. EPA will review the report and either confirm or modify the $NO_X$ limits. If the CEMS data collected during operating periods between months 26 and 34 that both meet pellet quality specifications and proper furnace/burner operation is normally distributed, the limit adjustment determination shall be based on the appropriate (depending upon whether data are statistically independent or dependent) 95% upper predictive limit (UPL) equations in paragraph (f) of this section. If the CEMS data collected during operating periods between months 26 and 34 that both meet pellet quality specifications and proper furnace/burner operation are not normally distributed, the limit adjustment determination shall be based on the non-parametric equation provided in paragraph (f) of this section. The data set for the determination shall exclude periods when pellet quality did not fall within the defined acceptable ranges of the pellet quality factors identified pursuant to paragraph (b)(1)(ii)(E) of this section and for any subsequent period when production has been reduced in response to pellet quality concerns consistent with Hibbing's ISO 9001 operating standards. Any excluded period will commence at the time documented on the production log demonstrating that pellet quality did not fall within the defined acceptable range and shall end when pellet quality within the defined acceptable range has been re-established at planned production levels, which will be presumed to be the level that existed immediately prior to the reduction in production due to pellet quality concerns. EPA may also exclude data where operations are inconsistent with the reported design parameters of the $NO_X$ reduction control technology installed.

(*7*) EPA will take final agency action by publishing its final confirmation or modification of the $NO_X$ limit in the **Federal Register** no later than 37 months after [EFFECTIVE DATE OF FINAL RULE]. The confirmed or modified $NO_X$ limit for Hibbing Line 1 when burning only natural gas may be no lower than 1.2 lbs $NO_X$/MMBtu, based on a 30-day rolling average, and may not exceed 1.8 lbs $NO_X$/MMBtu, based on a 30-day rolling average.

(B) Hibbing Line 2.

(*1*) An emission limit of 1.2 lbs $NO_X$/MMBtu, based on a 30-day rolling average, shall apply to Hibbing Line 2 when burning natural gas. This emission limit will become enforceable 55 months after [EFFECTIVE DATE OF FINAL RULE] and only after EPA's confirmation or modification of the emission limit in accordance with the procedures set forth below.

(*2*) Compliance with this emission limit will be demonstrated with data collected by a continuous emissions monitoring system (CEMS) for $NO_X$. The owner or operator of Hibbing Line 2 must install a CEMS for $NO_X$ and $SO_2$ within six months from [EFFECTIVE DATE OF FINAL RULE]. The owner or operator must start collecting CEMS data and submit the data to EPA no later than 30 days from the end of each calendar quarter after that installation deadline. Any remaining data through the end of the 52nd month from [EFFECTIVE DATE OF FINAL RULE], that doesn't fall within a calendar quarter, must be submitted to EPA no later than seven days from the end of the 52nd month. Although CEMS data must continue to be collected, it does not need to be submitted to EPA starting 52 months after [EFFECTIVE DATE OF FINAL RULE].

(*3*) No later than 42 months after [EFFECTIVE DATE OF FINAL RULE] the owner or operator must submit to EPA a report, including any final report(s) completed by the selected $NO_X$ reduction technology supplier and furnace retrofit engineer, containing a detailed engineering analysis and modeling of the $NO_X$ reduction control technology being installed on Hibbing Line 2. The $NO_X$ reduction control technology must be designed to meet an emission limit of 1.2 lbs $NO_X$/MMBtu. This report must include a list of all process and control technology variables that can reasonably be expected to have an impact on $NO_X$ emissions control technology performance, as well as a description of how these variables can be adjusted to reduce $NO_X$ emissions to meet the $NO_X$ design emission limit.

(*4*) The $NO_X$ reduction control technology shall be installed on Hibbing Line 2 furnace no later than 44 months after [EFFECTIVE DATE OF FINAL RULE].

(*5*) Commencing on the earlier of:

(*i*) Six months from the installation of the $NO_X$ reduction control technology; or

(*ii*) 44 months from [EFFECTIVE DATE OF FINAL RULE], the owner or operator must provide to EPA the results from pellet quality analyses. The owner or operator shall provide the results from pellet quality analyses no later than 30 days from the end of each calendar quarter up until 52 months after [EFFECTIVE DATE OF FINAL RULE]. Any remaining results through the end of the 52nd month from [EFFECTIVE DATE OF FINAL RULE], that do not fall within a calendar quarter, must be submitted to EPA no later than seven days from the end of the 52nd month. The pellet quality analyses shall include results for the following factors: Compression, reducibility, before tumble, after tumble, low temperature disintegration, and swelling. For each of the pellet quality analysis factors, the owner or operator must explain the pellet quality analysis factor, as well as the defined acceptable range for each factor using the applicable product quality standards based upon customers' pellet specifications that are contained in Hibbing's ISO 9001 quality management system. The owner or operator shall provide pellet quality analysis testing results that state the date and time of the analysis and, in order to define the time period when pellets were produced outside of the defined acceptable range for the pellet quality factors listed, provide copies of the production logs that document the starting and ending times for such periods. The owner or operator shall provide an explanation of causes for pellet samples that fail to meet the acceptable range for any pellet quality analysis factor. Pellet quality information and data may be submitted to EPA as Confidential Business Information.

(*6*) No later than 52 months after [EFFECTIVE DATE OF FINAL RULE], the owner or operator may submit to EPA a report to either confirm or modify the $NO_X$ limits for Hibbing Line 2 furnace within the upper and lower bounds described below. EPA will review the report and either confirm or modify the $NO_X$ limits. If the CEMS data collected during operating periods between months 44 and 52 that both meet pellet quality specifications and proper furnace/burner operation is normally distributed, the limit adjustment determination shall be based on the appropriate (depending upon whether data are statistically independent or dependent) 95% upper predictive limit (UPL) equations in paragraph (f) of this section. If the CEMS data collected during operating periods between months 44 and 52 that both meet pellet quality specifications and proper furnace/burner operation are not normally distributed, the limit adjustment determination shall be based on the non-parametric equation provided in paragraph (f) of this section. The data set for the determination shall exclude periods when pellet quality did not fall within the defined acceptable ranges of the pellet quality factors identified pursuant to paragraph (b)(1)(ii)(E) of this section and for any subsequent period when production has been reduced in response to pellet quality concerns consistent with Hibbing's ISO 9001 operating standards. Any excluded period will commence at the time documented on the production log demonstrating that pellet quality did not fall within the defined acceptable range and shall end when pellet quality within the defined acceptable range has been re-established at planned production levels, which will be presumed to be the level that existed immediately prior to the reduction in production due to pellet quality concerns. EPA may also exclude data where operations are inconsistent with the reported design parameters of the $NO_X$ reduction control technology installed.

(*7*) EPA will take final agency action by publishing its final confirmation or modification of the $NO_X$ limit in the **Federal Register** no later than 55 months after [EFFECTIVE DATE OF FINAL RULE]. The confirmed or modified $NO_X$ limit for Hibbing Line 2 when burning only natural gas may be no lower than 1.2 lbs $NO_X$/MMBtu, based on a 30-day rolling average, and may not exceed 1.8 lbs $NO_X$/MMBtu, based on a 30-day rolling average.

(C) Hibbing Line 3.

(*1*) An emission limit of 1.2 lbs $NO_X$/MMBtu, based on a 30-day rolling average, shall apply to Hibbing Line 3 when burning natural gas. This emission limit will become enforceable 60 months after [EFFECTIVE DATE OF FINAL RULE] and only after EPA's confirmation or modification of the emission limit in accordance with the procedures set forth below.

(*2*) Compliance with this emission limit will be demonstrated with data collected by a continuous emissions monitoring system (CEMS) for $NO_X$. The owner or operator of Hibbing Line 3 must install a CEMS for $NO_X$ and $SO_2$ within six months from [EFFECTIVE DATE OF FINAL RULE]. The owner or operator must start collecting CEMS data and submit the data to EPA no later than 30 days from the end of each calendar quarter after that installation deadline. Any remaining data through the end of the 57th month from [EFFECTIVE DATE OF FINAL RULE], that doesn't fall within a calendar quarter, must be submitted to EPA no later than seven days from the end of the 57th month. Although CEMS data must continue to be collected, it does not need to be submitted to EPA starting 57 months after the effective date of the rule.

(*3*) No later than 48 months after [EFFECTIVE DATE OF FINAL RULE] the owner or operator must submit to EPA a report, including any final report(s) completed by the selected $NO_X$ reduction technology supplier and furnace retrofit engineer, containing a detailed engineering analysis and modeling of the $NO_X$ reduction control technology being installed on Hibbing Line 3. The $NO_X$ reduction control technology must be designed to meet an emission limit of 1.2 lbs $NO_X$/MMBtu. This report must include a list of all process and control technology variables that can reasonably be expected to have an impact on $NO_X$ emissions control technology performance, as well as a description of how these variables can be adjusted to reduce $NO_X$ emissions to meet the $NO_X$ design emission limit.

(*4*) The $NO_X$ reduction control technology shall be installed on Hibbing Line 3 furnace no later than 50 months after [EFFECTIVE DATE OF FINAL RULE].

(*5*) Commencing on the earlier of:

(*i*) Six months from the installation of the $NO_X$ reduction control technology; or

(*ii*) 50 months from [EFFECTIVE DATE OF FINAL RULE], the owner or operator must provide to EPA the results from pellet quality analyses. The owner or operator shall provide the results from pellet quality analyses no later than 30 days from the end of each calendar quarter up until 57 months after [EFFECTIVE DATE OF FINAL RULE]. Any remaining results through the end of the 57th month from [EFFECTIVE DATE OF FINAL RULE], that do not fall within a calendar quarter, must be submitted to EPA no later than seven days from the end of the 57th month. The pellet quality analyses shall include results for the following factors: compression, reducibility, before tumble, after tumble, low temperature disintegration, and swelling. For each of the pellet quality

analysis factors, the owner or operator must explain the pellet quality analysis factor, as well as the defined acceptable range for each factor using the applicable product quality standards based upon customers' pellet specifications that are contained in Hibbing's ISO 9001 quality management system. The owner or operator shall provide pellet quality analysis testing results that state the date and time of the analysis and, in order to define the time period when pellets were produced outside of the defined acceptable range for the pellet quality factors listed, provide copies of the production logs that document the starting and ending times for such periods. The owner or operator shall provide an explanation of causes for pellet samples that fail to meet the acceptable range for any pellet quality analysis factor. Pellet quality information and data may be submitted to EPA as Confidential Business Information.

(*6*) No later than 57 months after [EFFECTIVE DATE OF FINAL RULE], the owner or operator may submit to EPA a report to either confirm or modify the $NO_X$ limits for Hibbing Line 3 furnace within the upper and lower bounds described below. EPA will review the report and either confirm or modify the $NO_X$ limits. If the CEMS data collected during operating periods between months 50 and 57 that both meet pellet quality specifications and proper furnace/burner operation is normally distributed, the limit adjustment determination shall be based on the appropriate (depending upon whether data are statistically independent or dependent) 95% upper predictive limit (UPL) equations in paragraph (f) of this section. If the CEMS data collected during operating periods between months 50 and 57 that both meet pellet quality specifications and proper furnace/burner operation are not normally distributed, the limit adjustment determination shall be based on the non-parametric equation provided in paragraph (f) of this section. The data set for the determination shall exclude periods when pellet quality did not fall within the defined acceptable ranges of the pellet quality factors identified pursuant to paragraph (b)(1)(ii)(E) of this section and for any subsequent period when production has been reduced in response to pellet quality concerns consistent with Hibbing's ISO 9001 operating standards. Any excluded period will commence at the time documented on the production log demonstrating that pellet quality did not fall within the defined acceptable range and shall end when pellet quality within the defined acceptable range has been re-established at planned production levels, which will be presumed to be the level that existed immediately prior to the reduction in production due to pellet quality concerns. EPA may also exclude data where operations are inconsistent with the reported design parameters of the $NO_X$ reduction control technology installed.

(*7*) EPA will take final agency action by publishing its final confirmation or modification of the $NO_X$ limit in the **Federal Register** no later than 60 months after [EFFECTIVE DATE OF FINAL RULE]. The confirmed or modified $NO_X$ limit for Hibbing Line 3 when burning only natural gas may be no lower than 1.2 lbs $NO_X$/MMBtu, based on a 30-day rolling average, and may not exceed 1.8 lbs $NO_X$/MMBtu, based on a 30-day rolling average.

* * * * *

(iv) United Taconite.

(A) United Taconite Line 1.

(*1*) An emission limit of 2.8 lbs $NO_X$/MMBtu, based on a 720-hour rolling average, shall apply to United Taconite Grate Kiln Line 1 when burning natural gas, and an emission limit of 1.5 lbs $NO_X$/MMBtu, based on a 720-hour rolling average, shall apply to United Taconite Grate Kiln Line 1 when burning coal or a mixture of coal and natural gas. These emission limits will become enforceable 37 months after [EFFECTIVE DATE OF FINAL RULE] and only after EPA's confirmation or modification of the emission limit in accordance with the procedures set forth below.

(*2*) Compliance with these emission limits shall be demonstrated with data collected by a continuous emissions monitoring system (CEMS) for $NO_X$. The owner or operator must start collecting CEMS data for $NO_X$ upon [EFFECTIVE DATE OF FINAL RULE] and submit the data to EPA no later than 30 days from the end of each calendar quarter. Any remaining data through the end of the 34th month from [EFFECTIVE DATE OF FINAL RULE], that doesn't fall within a calendar quarter, must be submitted to EPA no later than 7 days from the end of the 34th month. Although CEMS data must continue to be collected, it does not need to be submitted to EPA starting 34 months after [EFFECTIVE DATE OF FINAL RULE].

(*3*) No later than 24 months from [EFFECTIVE DATE OF FINAL RULE], the owner or operator must submit to EPA a report, including any final report(s) completed by the selected $NO_X$ reduction technology supplier and furnace retrofit engineer, containing a detailed engineering analysis and modeling of the $NO_X$ reduction control technology being installed on United Taconite Grate Kiln Line 1. This report must include a list of all variables that can reasonably be expected to have an impact on $NO_X$ emission control technology performance, as well as a description of how these variables can be adjusted to reduce $NO_X$ emissions to meet the $NO_X$ design emission limit. This $NO_X$ reduction control technology must be designed to meet emission limits of 2.8 lbs $NO_X$/MMBtu when burning natural gas and 1.5 lbs $NO_X$/MMBtu when burning coal or a mixture of coal and natural gas.

(*4*) The $NO_X$ reduction control technology shall be installed on United Taconite Grate Kiln Line 1 furnace no later than 26 months from [EFFECTIVE DATE OF FINAL RULE].

(*5*) Commencing on the earlier of

(*i*) Six months from the installation of the $NO_X$ reduction control technology; or

(*ii*) 26 months from the effective date of the rule, the owner or operator must provide to EPA the results from pellet quality analyses. The owner or operator shall provide the results from pellet quality analyses no later than 30 days from the end of each calendar quarter up until 34 months after [EFFECTIVE DATE OF FINAL RULE]. Any remaining results through the end of the 34th month, that do not fall within a calendar quarter, must be submitted to EPA no later than seven days from the end of the 34th month. The pellet quality analyses shall include results for the following factors: Compression, reducibility, before tumble, after tumble, and low temperature disintegration. For each of the pellet quality analysis factors, the owner or operator must explain the pellet quality analysis factor, as well as the defined acceptable range for each factor using the applicable product quality standards based upon customers' pellet specifications that are contained in Tilden's ISO 9001 quality management system. The owner or operator shall provide pellet quality analysis testing results that state the date and time of the analysis and, in order to define the time period when pellets were produced outside of the defined acceptable range for the pellet quality factors listed, provide copies of the production logs that document the starting and ending times for such periods. The owner or operator shall provide an explanation of causes for pellet samples that fail to meet the acceptable range for any pellet quality analysis factor. Pellet quality information and data may be submitted

to EPA as Confidential Business Information.

(*6*) No later than 34 months after [EFFECTIVE DATE OF FINAL RULE], the owner or operator may submit to EPA a report to either confirm or modify the $NO_X$ limits for United Taconite Grate Kiln Line 1 within the upper and lower bounds described below. EPA will review the report and either confirm or modify the $NO_X$ limits. If the CEMS data collected during operating periods between months 26 and 34 that both meet pellet quality specifications and proper furnace/burner operation is normally distributed, the limit adjustment determination shall be based on the appropriate (depending upon whether data are statistically independent or dependent) 95% upper predictive limit (UPL) equations in paragraph (f) of this section. If the CEMS data collected during operating periods between months 26 and 34 that both meet pellet quality specifications and proper furnace/burner operation are not normally distributed, the limit adjustment determination shall be based on the non-parametric equation provided in paragraph (f) of this section. The data set for the determination shall exclude periods when pellet quality did not fall within the defined acceptable ranges of the pellet quality factors identified pursuant to paragraph (b)(1)(iv)(A)(*5*) of this section and for any subsequent period when production had been reduced in response to pellet quality concerns consistent with United Taconite's ISO 9001 operating standards. Any excluded period will commence at the time documented on the production log demonstrating pellet quality did not fall within the defined acceptable range, and shall end when pellet quality within the defined acceptable range has been re-established at planned production levels, which will presumed to be the level that existed immediately prior to the reduction in production due to pellet quality concerns. EPA may also exclude data where operations are inconsistent with the reported design parameters of the $NO_X$ reduction control technology that were installed.

(*7*) EPA will take final agency action by publishing its final confirmation or modification of the $NO_X$ limits in the **Federal Register** no later than 37 months after [EFFECTIVE DATE OF FINAL RULE]. The confirmed or modified $NO_X$ limit for United Taconite Grate Kiln Line 1 when burning only natural gas may be no lower than 2.8 lbs $NO_X$/MMBtu, based on a 720-hour rolling average, and may not exceed 3.0 lbs $NO_X$/MMBtu, based on a 720-hour rolling average. The confirmed or modified $NO_X$ limit for United Taconite Grate Kiln Line 1 when burning coal or a mixture of coal and natural gas may be no lower than 1.5 lbs $NO_X$/MMBtu, based on a 720-hour rolling average, and may not exceed 2.5 lbs $NO_X$/MMBtu, based on a 720-hour rolling average.

(*8*) If the owner or operator submits a report proposing a single $NO_X$ limit for all fuels, EPA may approve the proposed $NO_X$ limit for all fuels based on a 30-day rolling average. The confirmed or modified limit will be established and enforceable within 37 months from [EFFECTIVE DATE OF FINAL RULE].

(B) United Taconite Line 2

(*1*) An emission limit of 2.8 lbs $NO_X$/MMBtu, based on a 720-hour rolling average, shall apply to United Taconite Grate Kiln Line 2 when burning natural gas, and an emission limit of 1.5 lbs $NO_X$/MMBtu, based on a 720-hour rolling average, shall apply to United Taconite Grate Kiln Line 2 when burning coal or a mixture of coal and natural gas. These emission limits will become enforceable 55 months after [EFFECTIVE DATE OF FINAL RULE] and only after EPA's confirmation or modification of the emission limit in accordance with the procedures set forth below.

(*2*) Compliance with these emission limits shall be demonstrated with data collected by a continuous emissions monitoring system (CEMS) for $NO_X$. The owner or operator must start collecting CEMS data for $NO_X$ upon [EFFECTIVE DATE OF FINAL RULE] and submit the data to EPA no later than 30 days from the end of each calendar quarter. Any remaining data through the end of the 52nd month from [EFFECTIVE DATE OF FINAL RULE], that doesn't fall within a calendar quarter, must be submitted to EPA no later than 7 days from the end of the 52nd month. Although CEMS data must continue to be collected, it does not need to be submitted to EPA starting 52 months after [EFFECTIVE DATE OF FINAL RULE].

(*3*) No later than 42 months from [EFFECTIVE DATE OF FINAL RULE], the owner or operator must submit to EPA a report, including any final report(s) completed by the selected $NO_X$ reduction technology supplier and furnace retrofit engineer, containing a detailed engineering analysis and modeling of the $NO_X$ reduction control technology being installed on United Taconite Grate Kiln Line 2. This report must include a list of all variables that can reasonably be expected to have an impact on $NO_X$ emission control technology performance, as well as a description of how these variables can be adjusted to reduce $NO_X$ emissions to meet the $NO_X$ design emission limit. This $NO_X$ reduction control technology must be designed to meet emission limits of 2.8 lbs $NO_X$/MMBtu when burning natural gas and 1.5 lbs $NO_X$/MMBtu when burning coal or a mixture of coal and natural gas.

(*4*) The $NO_X$ reduction control technology shall be installed on United Taconite Grate Kiln Line 2 furnace no later than 44 months from the effective date of the rule.

(*5*) Commencing on the earlier of:

(*i*) Six months from the installation of the $NO_X$ reduction control technology; or

(*ii*) 44 months from [EFFECTIVE DATE OF FINAL RULE], the owner or operator must provide to EPA the results from pellet quality analyses. The owner or operator shall provide the results from pellet quality analyses no later than 30 days from the end of each calendar quarter up until 52 months after [EFFECTIVE DATE OF FINAL RULE]. Any remaining results through the end of the 52nd month, that do not fall within a calendar quarter, must be submitted to EPA no later than seven days from the end of the 52nd month. The pellet quality analyses shall include results for the following factors: Compression, reducibility, before tumble, after tumble, and low temperature disintegration. For each of the pellet quality analysis factors, the owner or operator must explain the pellet quality analysis factor, as well as the defined acceptable range for each factor using the applicable product quality standards based upon customers' pellet specifications that are contained in Tilden's ISO 9001 quality management system. The owner or operator shall provide pellet quality analysis testing results that state the date and time of the analysis and, in order to define the time period when pellets were produced outside of the defined acceptable range for the pellet quality factors listed, provide copies of the production logs that document the starting and ending times for such periods. The owner or operator shall provide an explanation of causes for pellet samples that fail to meet the acceptable range for any pellet quality analysis factor. Pellet quality information and data may be submitted to EPA as Confidential Business Information.

(*6*) No later than 52 months after [EFFECTIVE DATE OF FINAL RULE], the owner or operator may submit to EPA a report to either confirm or modify the $NO_X$ limits for United Taconite Grate Kiln Line 2 within the upper and

lower bounds described below. EPA will review the report and either confirm or modify the $NO_X$ limits. If the CEMS data collected during operating periods between months 44 and 52 that both meet pellet quality specifications and proper furnace/burner operation is normally distributed, the limit adjustment determination shall be based on the appropriate (depending upon whether data are statistically independent or dependent) 95% upper predictive limit (UPL) equations in paragraph (f) of this section. If the CEMS data collected during operating periods between months 44 and 52 that both meet pellet quality specifications and proper furnace/burner operation are not normally distributed, the limit adjustment determination shall be based on the non-parametric equation provided in paragraph (f) of this section. The data set for the determination shall exclude periods when pellet quality did not fall within the defined acceptable ranges of the pellet quality factors identified pursuant to paragraph (b)(1)(iv)(B)(*5*) of this section and for any subsequent period when production had been reduced in response to pellet quality concerns consistent with United Taconite's ISO 9001 operating standards. Any excluded period will commence at the time documented on the production log demonstrating pellet quality did not fall within the defined acceptable range, and shall end when pellet quality within the defined acceptable range has been re-established at planned production levels, which will presumed to be the level that existed immediately prior to the reduction in production due to pellet quality concerns. EPA may also exclude data where operations are inconsistent with the reported design parameters of the $NO_X$ reduction control technology that were installed.

(*7*) EPA will take final agency action by publishing its final confirmation or modification of the $NO_X$ limits in the **Federal Register** no later than 55 months after [EFFECTIVE DATE OF FINAL RULE]. The confirmed or modified $NO_X$ limit for United Taconite Grate Kiln Line 2 when burning only natural gas may be no lower than 2.8 lbs $NO_X$/MMBtu, based on a 720-hour rolling average, and may not exceed 3.0 lbs $NO_X$/MMBtu, based on a 720-hour rolling average. The confirmed or modified $NO_X$ limit for United Taconite Grate Kiln Line 2 when burning coal or a mixture of coal and natural gas may be no lower than 1.5 lbs $NO_X$/MMBtu, based on a 720-hour rolling average, and may not exceed 2.5 lbs $NO_X$/MMBtu, based on a 720-hour rolling average.

(*8*) If the owner or operator submits a report proposing a single $NO_X$ limit for all fuels, EPA may approve the proposed $NO_X$ limit for all fuels based on a 30-day rolling average. The confirmed or modified limit will be established and enforceable within 55 months from [EFFECTIVE DATE OF FINAL RULE].

(v) ArcelorMittal Minorca Mine

(A) An emission limit of 1.2 lbs $NO_X$/MMBtu, based on a 30-day rolling average, shall apply to the ArcelorMittal Minorca Mine indurating furnace when burning natural gas. This emission limit will become enforceable 55 months after [EFFECTIVE DATE OF FINAL RULE] and only after EPA's confirmation or modification of the emission limit in accordance with the procedures set forth below.

(B) Compliance with this emission limit will be demonstrated with data collected by a continuous emissions monitoring system (CEMS) for $NO_X$. The owner or operator of the ArcelorMittal Minorca Mine indurating furnace must install a CEMS for $NO_X$ and $SO_2$ within six months from [EFFECTIVE DATE OF FINAL RULE]. The owner or operator must start collecting CEMS data and submit the data to EPA no later than 30 days from the end of each calendar quarter after that installation deadline. Any remaining data through the end of the 52nd month from [EFFECTIVE DATE OF FINAL RULE], that doesn't fall within a calendar quarter, must be submitted to EPA no later than seven days from the end of the 52nd month. Although CEMS data must continue to be collected, it does not need to be submitted to EPA starting 52 months after [EFFECTIVE DATE OF FINAL RULE].

(C) No later than 42 months after [EFFECTIVE DATE OF FINAL RULE] the owner or operator must submit to EPA a report, including any final report(s) completed by the selected $NO_X$ reduction technology supplier and furnace retrofit engineer, containing a detailed engineering analysis and modeling of the $NO_X$ reduction control technology being installed on the ArcelorMittal Minorca Mine indurating furnace. The $NO_X$ reduction control technology must be designed to meet an emission limit of 1.2 lbs $NO_X$/MMBtu. This report must include a list of all process and control technology variables that can reasonably be expected to have an impact on $NO_X$ emissions control technology performance, as well as a description of how these variables can be adjusted to reduce $NO_X$ emissions to meet the $NO_X$ design emission limit.

(D) The $NO_X$ reduction control technology shall be installed on the ArcelorMittal Minorca Mine indurating furnace no later than 44 months after the effective date of the rule.

(E) Commencing on the earlier of:

(*1*) Six months from the installation of the $NO_X$ reduction control technology; or

(*2*) 44 months from [EFFECTIVE DATE OF FINAL RULE], the owner or operator must provide to EPA the results from pellet quality analyses. The owner or operator shall provide the results from pellet quality analyses no later than 30 days from the end of each calendar quarter up until 52 months after [EFFECTIVE DATE OF FINAL RULE]. Any remaining results through the end of the 52nd month from [EFFECTIVE DATE OF FINAL RULE], that do not fall within a calendar quarter, must be submitted to EPA no later than seven days from the end of the 52nd month. The pellet quality analyses shall include results for the following factors: Compression, reducibility, before tumble, after tumble, low temperature disintegration, and contraction. For each of the pellet quality analysis factors, the owner or operator must explain the pellet quality analysis factor, as well as the defined acceptable range for each factor using the applicable product quality standards based upon customers' pellet specifications that are contained in the ArcelorMittal Minorca Mine's Standard Product Parameters. The owner or operator shall provide pellet quality analysis testing results that state the date and time of the analysis and, in order to define the time period when pellets were produced outside of the defined acceptable range for the pellet quality factors listed, provide copies of production or scale data that document the starting and ending times for such periods. The owner or operator shall provide an explanation of causes for pellet samples that fail to meet the acceptable range for any pellet quality analysis factor. Pellet quality information and data may be submitted to EPA as Confidential Business Information.

(F) No later than 52 months after [EFFECTIVE DATE OF FINAL RULE], the owner or operator may submit to EPA a report to either confirm or modify the $NO_X$ limits for the ArcelorMittal Minorca Mine indurating furnace within the upper and lower bounds described below. EPA will review the report and either confirm or modify the $NO_X$ limits. If the CEMS data collected during operating periods between months 44 and 52 that both meet pellet quality specifications and proper furnace/

burner operation is normally distributed, the limit adjustment determination shall be based on the appropriate (depending upon whether data are statistically independent or dependent) 95% upper predictive limit (UPL) equations in paragraph (f) of this section. If the CEMS data collected during operating periods between months 44 and 52 that both meet pellet quality specifications and proper furnace/burner operation are not normally distributed, the limit adjustment determination shall be based on the non-parametric equation provided in paragraph (f) of this section. The data set for the determination shall exclude periods when pellet quality did not fall within the defined acceptable ranges of the pellet quality factors identified pursuant to paragraph (b)(1)(v)(*5*) of this section and for any subsequent period when production has been reduced in response to pellet quality concerns consistent with the ArcelorMittal Minorca Mine's Standard Product Parameters. Any excluded period will commence at the time documented in related quality reports demonstrating that pellet quality did not fall within the defined acceptable range and shall end when pellet quality within the defined acceptable range has been re-established at planned production levels, which will be presumed to be the level that existed immediately prior to the reduction in production due to pellet quality concerns. EPA may also exclude data where operations are inconsistent with the reported design parameters of the $NO_X$ reduction control technology installed.

(*G*) EPA will take final agency action by publishing its final confirmation or modification of the $NO_X$ limit in the **Federal Register** no later than 55 months [EFFECTIVE DATE OF FINAL RULE]. The confirmed or modified $NO_X$ limit for the ArcelorMittal Minorca Mine indurating furnace when burning only natural gas may be no lower than 1.2 lbs $NO_X$/MMBtu, based on a 30-day rolling average, and may not exceed 1.8 lbs $NO_X$/MMBtu, based on a 30-day rolling average.

* * * * *

(2) $SO_2$ emission limits

* * * * *

(iv) United Taconite

An aggregate emission limit of 529.0 lbs $SO_2$/hr, based on a 30-day rolling average, shall apply to the Line 1 pellet furnace (EU040) and Line 2 pellet furnace (EU042) beginning six months after [EFFECTIVE DATE OF FINAL RULE] the effective date of the rule. Compliance with this aggregate emission limit shall be demonstrated with data collected by a continuous emissions monitoring system (CEMS) for $SO_2$. The owner or operator must start collecting CEMS data for $SO_2$ beginning six months after [EFFECTIVE DATE OF FINAL RULE] and submit the data to EPA no later than 30 days from the end of each calendar quarter. Beginning 6 months after the effective date of the rule, any coal burned on UTAC Grate Kiln Line 1 or Line 2 shall have no more than 1.5 percent sulfur by weight based on a monthly block average. The sampling and calculation methodology for determining the sulfur content of coal must be described in the monitoring plan required for this furnace.

* * * * *

(c) *Testing and monitoring.* (1) The owner or operator of the respective facility shall install, certify, calibrate, maintain and operate Continuous Emissions Monitoring Systems (CEMS) for $NO_X$ on United States Steel Corporation, Keetac unit EU030; Hibbing Taconite Company units EU020, EU021, and EU022; United States Steel Corporation, Minntac units EU225, EU261, EU282, EU315, and EU334; United Taconite units EU040 and EU042; ArcelorMittal Minorca Mine unit EU026; and Northshore Mining Company-Silver Bay units Furnace 11(EU100/EU104) and Furnace 12(EU110/EU114). Compliance with the emission limits for $NO_X$ shall be determined using data from the CEMS.

(2) The owner or operator shall install, certify, calibrate, maintain and operate CEMS for $SO_2$ on United States Steel Corporation, Keetac unit EU030; Hibbing Taconite Company units EU020, EU021, and EU022; United States Steel Corporation, Minntac units EU225, EU261, EU282, EU315, and EU334; United Taconite units EU040 and EU042; ArcelorMittal Minorca Mine unit EU026; and Northshore Mining Company—Silver Bay units Furnace 11 (EU100/EU104) and Furnace 12 (EU110/EU114).

(3) The owner or operator shall install, certify, calibrate, maintain and operate one or more continuous diluent monitor(s) ($O_2$ or $CO_2$) and continuous flow rate monitor(s) on the BART affected units to allow conversion of the $NO_X$ and $SO_2$ concentrations to units of the standard (lbs/MMBtu and lbs/hr, respectively) unless a demonstration is made that a diluent monitor and continuous flow rate monitor are not needed for the owner or operator to demonstrate compliance with applicable emission limits in units of the standards.

(4) For purposes of this section, all CEMS required by this section must meet the requirements of paragraphs (c)(4)(i)–(xiv) of this section.

(i) All CEMS must be installed, certified, calibrated, maintained, and operated in accordance with 40 CFR part 60, appendix B, Performance Specification 2 (PS–2) and appendix F, Procedure 1.

(ii) CEMS must be installed and operational as follows:

(A) All CEMS associated with monitoring $NO_X$ (including the $NO_X$ monitor and necessary diluent and flow rate monitors) at the following facilities: U.S. Steel Keetac, U.S. Steel Minntac, and Northshore Mining Company-Silver Bay, must be installed and operational no later than the unit specific compliance dates for the emission limits identified at paragraphs (b)(1)(i), (iii) and (vi) of this section, respectively.

(B) All CEMS associated with monitoring $NO_X$ (including the $NO_X$ monitor and necessary diluent and flow rate monitors) at the following facilities: Hibbing Taconite Company, United Taconite, and ArcelorMittal Minorca Mine, must be installed and operational no later than the unit specific installation dates for the installation and operation of CEMS identified at paragraphs (b)(1)(ii), (iv) and (v) of this section, respectively.

(C) All CEMS associated with monitoring $SO_2$ at the following facilities: U.S. Steel Keetac, U.S. Steel Minntac, and Northshore Mining Company-Silver Bay, must be installed and operational no later than six months after March 8, 2013.

(D) All CEMS associated with monitoring $SO_2$ at the following facilities: Hibbing Taconite Company, United Taconite, and ArcelorMittal Minorca Mine, must be installed and operational no later than six months after [EFFECTIVE DATE OF FINAL RULE].

(E) The operational status of the CEMS identified in paragraphs (c)(1) and (2) of this section shall be verified by, as a minimum, completion of the manufacturer's written requirements or recommendations for installation, operation, and calibration of the devices.

(iii) The owner or operator must conduct a performance evaluation of each CEMS in accordance with 40 CFR part 60, appendix B, PS–2. The performance evaluations must be completed no later than 60 days after the respective CEMS installation.

(iv) The owner or operator of each CEMS must conduct periodic Quality Assurance, Quality Control (QA/QC) checks of each CEMS in accordance

with 40 CFR part 60, appendix F, Procedure 1. The first CEMS accuracy test will be a relative accuracy test audit (RATA) and must be completed no later than 60 days after the respective CEMS installation.

(v) The owner or operator of each CEMS must furnish the Regional Administrator two, or upon request, more copies of a written report of the results of each performance evaluation and QA/QC check within 60 days of completion,.

(vi) The owner or operator of each CEMS must check, record, and quantify the zero and span calibration drifts at least once daily (every 24 hours) in accordance with 40 CFR part 60, appendix F, Procedure 1, Section 4.

(vii) Except for CEMS breakdowns, repairs, calibration checks, and zero and span adjustments, all CEMS required by this section shall be in continuous operation during all periods of BART affected process unit operation, including periods of process unit startup, shutdown, and malfunction.

(viii) All CEMS required by this section must meet the minimum data requirements at paragraphs (c)(4)(viii)(A) through (C) of this section.

(A) Complete a minimum of one cycle of operation (sampling, analyzing, and data recording) for each successive 15-minute quadrant of an hour.

(B) Sample, analyze and record emissions data for all periods of process operation except as described in paragraph (c)(4)(viii)(C) of this section.

(C) When emission data from CEMS are not available due to continuous monitoring system breakdowns, repairs, calibration checks, or zero and span adjustments, emission data must be obtained using other monitoring systems or emission estimation methods approved by the EPA. The other monitoring systems or emission estimation methods to be used must be incorporated into the monitoring plan required by this section and provide information such that emissions data are available for a minimum of 18 hours in each 24 hour period and at least 22 out of 30 successive unit operating days.

(ix) Owners or operators of each CEMS required by this section must reduce all data to 1-hour averages. Hourly averages shall be computed using all valid data obtained within the hour but no less than one data point in each fifteen-minute quadrant of an hour. Notwithstanding this requirement, an hourly average may be computed from at least two data points separated by a minimum of 15 minutes (where the unit operates for more than one quadrant in an hour) if data are unavailable as a result of performance of calibration, quality assurance, preventive maintenance activities, or backups of data from data acquisition and handling systems, and recertification events.

(x) The 30-day rolling average emission rate determined from data derived from the CEMS required by this section (in lbs/MMBtu or lbs/hr depending on the emission standard selected) must be calculated in accordance with paragraphs (c)(4)(x)(A)–(F) of this section.

(A) Sum the total pounds of the pollutant in question emitted from the Unit during an operating day and the previous 29 operating days.

(B) Sum the total heat input to the unit (in MMBtu) or the total actual hours of operation (in hours) during an operating day and the previous 29 operating days.

(C) Divide the total number of pounds of the pollutant in question emitted during the 30 operating days by the total heat input (or actual hours of operation depending on the emission limit selected) during the 30 operating days.

(D) For purposes of this calculation, an operating day is any day during which fuel is combusted in the BART affected Unit regardless of whether pellets are produced. Actual hours of operation are the total hours a unit is firing fuel regardless of whether a complete 24-hour operational cycle occurs (*i.e.* if the furnace is firing fuel for only 5 hours during a 24-hour period, then the actual operating hours for that day are 5. Similarly, total number of pounds of the pollutant in question for that day is determined only from the CEMS data for the five hours during which fuel is combusted.)

(E) If the owner or operator of the CEMS required by this section uses an alternative method to determine 30-day rolling averages, that method must be described in detail in the monitoring plan required by this section. The alternative method will only be applicable if the final monitoring plan and the alternative method are approved by EPA.

(F) A new 30-day rolling average emission rate must be calculated for each new operating day.

(xi) The 720-hour rolling average emission rate determined from data derived from the CEMS required by this section (in lbs/MMBtu) must be calculated in accordance with (c)(4)(xi)(A)–(C) of this section.

(A) Sum the total pounds of $NO_X$ emitted from the unit every hour and the previous (not necessarily consecutive) 719 hours for which that type of fuel (either natural gas or mixed coal and natural gas) was used.

(B) Sum the total heat input to the unit (in MMBtu) every hour and the previous (not necessarily consecutive) 719 hours for which that type of fuel (either natural gas or mixed coal and natural gas) was used.

(C) Divide the total number of pounds of $NO_X$ emitted during the 720 hours, as defined above, by the total heat input during the same 720 hour period. This calculation must be done separately for each fuel type (either for natural gas or mixed coal and natural gas).

(xii) Data substitution must not be used for purposes of determining compliance under this section.

(xiii) All CEMS data shall be reduced and reported in units of the applicable standard.

(xiv) A Quality Control Program must be developed and implemented for all CEMS required by this section in accordance with 40 CFR part 60, appendix F, Procedure 1, Section 3. The program will include, at a minimum, written procedures and operations for calibration checks, calibration drift adjustments, preventative maintenance, data collection, recording and reporting, accuracy audits/procedures, periodic performance evaluations, and a corrective action program for malfunctioning CEMS.

(d) *Recordkeeping requirements.* (1)(i) Records required by this section must be kept in a form suitable and readily available for expeditious review.

(ii) Records required by this section must be kept for a minimum of 5 years following the date of creation.

(iii) Records must be kept on site for at least 2 years following the date of creation and may be kept offsite, but readily accessible, for the remaining 3 years.

(2) The owner or operator of the BART affected units must maintain the records at paragraphs (d)(2)(i)–(xi) of this section.

(i) A copy of each notification and report developed for and submitted to comply with this section including all documentation supporting any initial notification or notification of compliance status submitted according to the requirements of this section.

(ii) Records of the occurrence and duration of startup, shutdown, and malfunction of the BART affected units, air pollution control equipment, and CEMS required by this section.

(iii) Records of activities taken during each startup, shutdown, and malfunction of the BART affected unit, air pollution control equipment, and CEMS required by this section.

(iv) Records of the occurrence and duration of all major maintenance conducted on the BART affected units,

air pollution control equipment, and CEMS required by this section.

(v) Records of each excess emission report, including all documentation supporting the reports, dates and times when excess emissions occurred, investigations into the causes of excess emissions, actions taken to minimize or eliminate the excess emissions, and preventative measures to avoid the cause of excess emissions from occurring again.

(vi) Records of all CEMS data including, as a minimum, the date, location, and time of sampling or measurement, parameters sampled or measured, and results.

(vii) All records associated with quality assurance and quality control activities on each CEMS as well as other records required by 40 CFR part 60, appendix F, Procedure 1 including, but not limited to, the quality control program, audit results, and reports submitted as required by this section.

(viii) Records of the $NO_X$ emissions during all periods of BART affected unit operation, including startup, shutdown and malfunction in the units of the standard. The owner or operator shall convert the monitored data into the appropriate unit of the emission limitation using appropriate conversion factors and F-factors. F-factors used for purposes of this section shall be documented in the monitoring plan and developed in accordance with 40 CFR part 60, appendix A, Method 19. The owner or operator may use an alternate method to calculate the $NO_X$ emissions upon written approval from EPA.

(ix) Records of the $SO_2$ emissions in lbs/MMBTUs or lbs/hr (based on CEMS data), depending on the emission standard selected, during all periods of operation, including periods of startup, shutdown and malfunction, in the units of the standard.

(x) Records associated with the CEMS unit including type of CEMS, CEMS model number, CEMS serial number, and initial certification of each CEMS conducted in accordance with 40 CFR part 60, appendix B, Performance Specification 2 must be kept for the life of the CEMS unit.

(xi) Records of all periods of fuel oil usage as required at paragraph (b)(2)(vii) of this section.

(e) *Reporting requirements.* (1) All requests, reports, submittals, notifications, and other communications to the Regional Administrator required by this section shall be submitted, unless instructed otherwise, to the Air and Radiation Division, U.S. Environmental Protection Agency, Region 5 (A–18J), at 77 West Jackson Boulevard, Chicago, Illinois 60604.

(2) The owner or operator of each BART affected unit identified in this section and CEMS required by this section must provide to the Regional Administrator the written notifications, reports and plans identified at paragraphs (e)(2)(i)–(viii) of this section. If acceptable to both the Regional Administrator and the owner or operator of each BART affected unit identified in this section and CEMS required by this section the owner or operator may provide electronic notifications, reports and plans.

(i) A notification of the date construction of control devices and installation of burners required by this section commences postmarked no later than 30 days after the commencement date.

(ii) A notification of the date the installation of each CEMS required by this section commences postmarked no later than 30 days after the commencement date.

(iii) A notification of the date the construction of control devices and installation of burners required by this section is complete postmarked no later than 30 days after the completion date.

(iv) A notification of the date the installation of each CEMS required by this section is complete postmarked no later than 30 days after the completion date.

(v) A notification of the date control devices and burners installed by this section startup postmarked no later than 30 days after the startup date.

(vi) A notification of the date CEMS required by this section startup postmarked no later than 30 days after the startup date.

(vii) A notification of the date upon which the initial CEMS performance evaluations are planned. This notification must be submitted at least 60 days before the performance evaluation is scheduled to begin.

(viii) A notification of initial compliance, signed by the responsible official who shall certify its accuracy, attesting to whether the source has complied with the requirements of this section, including, but not limited to, applicable emission standards, control device and burner installations, CEMS installation and certification. This notification must be submitted before the close of business on the 60th calendar day following the completion of the compliance demonstration and must include, at a minimum, the information at paragraphs (e)(2)(viii)(A)–(F) of this section.

(A) The methods used to determine compliance.

(B) The results of any CEMS performance evaluations, and other monitoring procedures or methods that were conducted.

(C) The methods that will be used for determining continuing compliance, including a description of monitoring and reporting requirements and test methods.

(D) The type and quantity of air pollutants emitted by the source, reported in units of the standard.

(E) A description of the air pollution control equipment and burners installed as required by this section, for each emission point.

(F) A statement by the owner or operator as to whether the source has complied with the relevant standards and other requirements.

(3) The owner or operator must develop and implement a written startup, shutdown, and malfunction plan for $NO_X$ and $SO_2$. The plan must include, at a minimum, procedures for operating and maintaining the source during periods of startup, shutdown, and malfunction; and a program of corrective action for a malfunctioning process and air pollution control and monitoring equipment used to comply with the relevant standard. The plan must ensure that, at all times, the owner or operator operates and maintains each affected source, including associated air pollution control and monitoring equipment, in a manner which satisfies the general duty to minimize or eliminate emissions using good air pollution control practices. The plan must ensure that owners or operators are prepared to correct malfunctions as soon as practicable after their occurrence.

(4) The written reports of the results of each performance evaluation and QA/QC check in accordance with and as required by paragraph (c)(4)(v) of this section.

(5) *Compliance reports.* The owner or operator of each BART affected unit must submit semiannual compliance reports. The semiannual compliance reports must be submitted in accordance with paragraphs (e)(5)(i) through (iv) of this section, unless the Administrator has approved a different schedule.

(i) The first compliance report must cover the period beginning on the compliance date that is specified for the affected source through June 30 or December 31, whichever date comes first after the compliance date that is specified for the affected source.

(ii) The first compliance report must be postmarked no later than 30 calendar days after the reporting period covered by that report (July 30 or January 30), whichever comes first.

(iii) Each subsequent compliance report must cover the semiannual

reporting period from January 1 through June 30 or the semiannual reporting period from July 1 through December 31.

(iv) Each subsequent compliance report must be postmarked no later than 30 calendar days after the reporting period covered by that report (July 30 or January 30).

(6) *Compliance report contents.* Each compliance report must include the information in paragraphs (e)(6)(i) through (vi) of this section.

(i) Company name and address.

(ii) Statement by a responsible official, with the official's name, title, and signature, certifying the truth, accuracy, and completeness of the content of the report.

(iii) Date of report and beginning and ending dates of the reporting period.

(iv) Identification of the process unit, control devices, and CEMS covered by the compliance report.

(v) A record of each period of startup, shutdown, or malfunction during the reporting period and a description of the actions the owner or operator took to minimize or eliminate emissions arising as a result of the startup, shutdown or malfunction and whether those actions were or were not consistent with the source's startup, shutdown, and malfunction plan.

(vi) A statement identifying whether there were or were not any deviations from the requirements of this section during the reporting period. If there were deviations from the requirements of this section during the reporting period, then the compliance report must describe in detail the deviations which occurred, the causes of the deviations, actions taken to address the deviations, and procedures put in place to avoid such deviations in the future. If there were no deviations from the requirements of this section during the reporting period, then the compliance report must include a statement that there were no deviations. For purposes of this section, deviations include, but are not limited to, emissions in excess of applicable emission standards established by this section, failure to continuously operate an air pollution control device in accordance with operating requirements designed to assure compliance with emission standards, failure to continuously operate CEMS required by this section, and failure to maintain records or submit reports required by this section.

(7) Each owner or operator of a CEMS required by this section must submit quarterly excess emissions and monitoring system performance reports for each pollutant monitored for each BART affected unit monitored. All reports must be postmarked by the 30th day following the end of each three-month period of a calendar year (January–March, April–June, July–September, October–December) and must include, at a minimum, the requirements at paragraphs (e)(7)(i) through (xv) of this section.

(i) Company name and address.

(ii) Identification and description of the process unit being monitored.

(iii) The dates covered by the reporting period.

(iv) Total source operating hours for the reporting period.

(v) Monitor manufacturer, monitor model number and monitor serial number.

(vi) Pollutant monitored.

(vii) Emission limitation for the monitored pollutant.

(viii) Date of latest CEMS certification or audit.

(ix) A description of any changes in continuous monitoring systems, processes, or controls since the last reporting period.

(x) A table summarizing the total duration of excess emissions, as defined at paragraphs (e)(7)(x)(A) to (B) of this section, for the reporting period broken down by the cause of those excess emissions (startup/shutdown, control equipment problems, process problems, other known causes, unknown causes), and the total percent of excess emissions (for all causes) for the reporting period calculated as described at paragraph (e)(7)(x)(C) of this section.

(A) For purposes of this section, an excess emission is defined as any 30-day or 720-hour rolling average period, including periods of startup, shutdown and malfunction, during which the 30-day or 720-hour (as appropriate) rolling average emissions of either regulated pollutant ($SO_2$ and $NO_X$), as measured by a CEMS, exceeds the applicable emission standards in this section.

(B)(*1*) For purposes of this section, if a facility calculates a 30-day rolling average emission rate in accordance with this section which exceeds the applicable emission standards of this section, then it will be considered 30 days of excess emissions. If the following 30-day rolling average emission rate is calculated and found to exceed the applicable emission standards of this section as well, then it will add one more day to the total days of excess emissions (*i.e.* 31 days). Similarly, if an excess emission is calculated for a 30-day rolling average period and no additional excess emissions are calculated until 15 days after the first, then that new excess emission will add 15 days to the total days of excess emissions (*i.e.* 30 + 15 = 45). For purposes of this section, if an excess emission is calculated for any period of time within a reporting period, there will be no fewer than 30 days of excess emissions but there should be no more than 121 days of excess emissions for a reporting period.

(*2*) For purposes of this section, if a facility calculates a 720-hour rolling average emission rate in accordance with this section which exceeds the applicable emission standards of this section, then it will be considered 30 days of excess emissions. If the 24th following 720-hour rolling average emission rate is calculated and found to exceed the applicable emission standards of the rule as well, then it will add one more day to the total days of excess emissions (*i.e.* 31 days). Similarly, if an excess emission is calculated for a 720-hour rolling average period and no additional excess emissions are calculated until 360 hours after the first, then that new excess emission will add 15 days to the total days of excess emissions (*i.e.* 30+15 = 45). For purposes of this section, if an excess emission is calculated for any period of time with a reporting period, there will be no fewer than 30 days of excess emissions but there should be no more than 121 days of excess emissions for a reporting period.

(C) For purposes of this section, the total percent of excess emissions will be determined by summing all periods of excess emissions (in days) for the reporting period, dividing that number by the total BART affected unit operating days for the reporting period, and then multiplying by 100 to get the total percent of excess emissions for the reporting period. An operating day, as defined previously, is any day during which fuel is fired in the BART affected unit for any period of time. Because of the possible overlap of 30-day rolling average excess emissions across quarters, there are some situations where the total percent of excess emissions could exceed 100 percent. This extreme situation would only result from serious excess emissions problems where excess emissions occur for nearly every day during a reporting period.

(xi) A table summarizing the total duration of monitor downtime, as defined at paragraph (e)(7)(xi)(A) of this section, for the reporting period broken down by the cause of the monitor downtime (monitor equipment malfunctions, non-monitor equipment malfunctions, quality assurance calibration, other known causes, unknown causes), and the total percent of monitor downtime (for all causes) for the reporting period calculated as

described at paragraph (e)(7)(xi)(B) of this section.

(A) For purposes of this section, monitor downtime is defined as any period of time (in hours) during which the required monitoring system was not measuring emissions from the BART affected unit. This includes any period of CEMS QA/QC, daily zero and span checks, and similar activities.

(B) For purposes of this section, the total percent of monitor downtime will be determined by summing all periods of monitor downtime (in hours) for the reporting period, dividing that number by the total number of BART affected unit operating hours for the reporting period, and then multiplying by 100 to get the total percent of excess emissions for the reporting period.

(xii) A table which identifies each period of excess emissions for the reporting period and includes, at a minimum, the information in paragraphs (e)(7)(xii)(A) through (F) of this section.

(A) The date of each excess emission.

(B) The beginning and end time of each excess emission.

(C) The pollutant for which an excess emission occurred.

(D) The magnitude of the excess emission.

(E) The cause of the excess emission.

(F) The corrective action taken or preventative measures adopted to minimize or eliminate the excess emissions and prevent such excess emission from occurring again.

(xiii) A table which identifies each period of monitor downtime for the reporting period and includes, at a minimum, the information in paragraphs (e)(7)(xiii)(A) through (D) of this section.

(A) The date of each period of monitor downtime.

(B) The beginning and end time of each period of monitor downtime.

(C) The cause of the period of monitor downtime.

(D) The corrective action taken or preventative measures adopted for system repairs or adjustments to minimize or eliminate monitor downtime and prevent such downtime from occurring again.

(xiv) If there were no periods of excess emissions during the reporting period, then the excess emission report must include a statement which says there were no periods of excess emissions during this reporting period.

(xv) If there were no periods of monitor downtime, except for daily zero and span checks, during the reporting period, then the excess emission report must include a statement which says there were no periods of monitor downtime during this reporting period except for the daily zero and span checks.

(8) The owner or operator of each CEMS required by this section must develop and submit for review and approval by the Regional Administrator a site specific monitoring plan. The purpose of this monitoring plan is to establish procedures and practices which will be implemented by the owner or operator in its effort to comply with the monitoring, recordkeeping and reporting requirements of this section. The monitoring plan must include, at a minimum, the information at paragraphs (e)(8)(i) through (x) of this section.

(i) Site specific information including the company name, address, and contact information.

(ii) The objectives of the monitoring program implemented and information describing how those objectives will be met.

(iii) Information on any emission factors used in conjunction with the CEMS required by this section to calculate emission rates and a description of how those emission factors were determined.

(iv) A description of methods to be used to calculate emission rates when CEMS data is not available due to downtime associated with QA/QC events.

(v) A description of the QA/QC program to be implemented by the owner or operator of CEMS required by this section. This can be the QA/QC program developed in accordance with 40 CFR part 60, Appendix F, Procedure 1, Section 3.

(vi) A list of spare parts for CEMS maintained on site for system maintenance and repairs.

(vii) A description of the procedures to be used to calculate 30-day rolling averages and 720-hour rolling averages and example calculations which shows the algorithms used by the CEMS to calculate 30-day rolling averages and 720-hour rolling averages.

(viii) A sample of the document to be used for the quarterly excess emission reports required by this section.

(ix) A description of the procedures to be implemented to investigate root causes of excess emissions and monitor downtime and the proposed corrective actions to address potential root causes of excess emissions and monitor downtime.

(x) A description of the sampling and calculation methodology for determining the percent sulfur by weight as a monthly block average for coal used during that month.

(f) Equations for Establishing the Upper Predictive Limit

(1) *Equation for Normal Distribution and Statistically Independent Data*

$$UPL = \bar{x} + t_{[(n-1),(0.95)]}\sqrt{s^2\left(\frac{1}{n} + \frac{1}{m}\right)}$$

Where:

$\bar{x}$ = average or mean of test run data;

$t_{[(n-1),(0.95)]}$ = t score, the one-tailed t value of the Student's t distribution for a specific degree of freedom (n − 1)and a confidence level (0.95; 0.99 for Tilden $SO_2$)

$s^2$ = variance of the dataset;

$n$ = number of values

$m$ = number of values used to calculate the test average (m = 720 as per averaging time)

(2)(i) To determine if statistically independent, use the Rank von Neumann Test on p. 137 of data Quality Assessment: Statistical Methods for Practitioners EPA QA/G–9S.

(ii) Alternative to Rank von Neumann test to determine if data are dependent, data are dependent if t test value is greater than t critical value, where:

$$t\ test = \frac{\rho}{\sqrt{\frac{1-\rho^2}{n-2}}}$$

ρ = correlation between data points
*t critical* = $t_{[(n-2),(0.95)]}$ = t score, the two-tailed t value of the Student's t distribution for a specific degree of freedom (n − 2) and a confidence level (0.95)

(3) If data are dependent then use the following equation.

*Equation for Normal Distribution and Data not Statistically Independent*

$$UPL = \bar{x} + t_{[(n-1),(0.95)]}\sqrt{s^2[1+(n-1)\rho](\frac{1}{n}+\frac{1}{m})}$$

Where:
ρ = correlation between data points

(4) *Non-parametric Equations for Data Not Normally Distributed*

$m = (n + 1) * \alpha$

$m$ = the rank of the ordered data point, when data is sorted smallest to largest
$n$ = number of data points
α = 0.95, to reflect the 95th percentile

If $m$ is a whole number, then the limit, UPL, shall be computed as:

$UPL = X_m$

Where:
$X_m$ = value of the $m^{th}$ data point in terms of lbs $SO_2$/hr or lbs $NO_X$/MMBtu, when the data is sorted smallest to largest.

If $m$ is not a whole number, the limit shall be computed by linear interpolation according to the following equation.

$UPL = x_m = x_{m_i \bullet m_d} = x_{m_i} + 0.m_d\,(x_{m_i+1} - x_{m_i})$

Where:
$m_i$ = the integer portion of $m$, *i.e.*, $m$ truncated at zero decimal places, and
$m_d$ = the decimal portion of $m$

* * * * *

[FR Doc. 2015–25023 Filed 10–21–15; 8:45 am]

BILLING CODE 6560–50–P

# FEDERAL REGISTER

Vol. 80 Thursday,

No. 204 October 22, 2015


Part IV

## Department of Homeland Security

Coast Guard

46 CFR Parts 30, 150, and 153

2013 Liquid Chemical Categorization Updates; Proposed Rule

**DEPARTMENT OF HOMELAND SECURITY**

**Coast Guard**

**46 CFR Parts 30, 150, and 153**

**[Docket No. USCG–2013–0423]**

**RIN 1625–AB94**

## 2013 Liquid Chemical Categorization Updates

**AGENCY:** Coast Guard, DHS.

**ACTION:** Supplemental notice of proposed rulemaking.

**SUMMARY:** The Coast Guard proposes additional updates and revisions to regulatory tables that were amended by an interim rule published in August 2013. The tables list liquid hazardous materials, liquefied gases, and compressed gases approved for maritime transportation in bulk, and indicate how each cargo is categorized by its pollution risk and safe carriage requirements. These proposals would correct errors in the interim rule and bring the tables current through December 2013. Updated information is of value to shippers and to the owners and operators of U.S.-flag tank and bulk cargo vessels in any waters, and most foreign-flag tank and oceangoing bulk cargo vessels in U.S. waters. The proposed rule promotes the Coast Guard's maritime safety and stewardship (environmental protection) missions.

**DATES:** Comments and related material must be submitted to the online docket via *http://www.regulations.gov*, or reach the Docket Management Facility, on or before January 20, 2016.

**ADDRESSES:** Submit comments using one of the listed methods, and see the **SUPPLEMENTARY INFORMATION** section of this preamble for more information on public comments.

- *Online—http://www.regulations.gov* following Web site instructions.
- *Fax*—202–493–2251.
- *Mail* or *hand deliver*—Docket Management Facility (M–30), U.S. Department of Transportation, West Building Ground Floor, Room W12–140, 1200 New Jersey Avenue SE., Washington, DC 20590–0001. Hand delivery hours: 9 a.m. to 5 p.m., Monday through Friday, except Federal holidays (telephone 202–366–9329).

**FOR FURTHER INFORMATION CONTACT:** For information about this document call or email Mr. Patrick Keffler, Coast Guard; telephone 202–372–1424, email *Patrick.A.Keffler@uscg.mil*. For information about viewing or submitting material to the docket, call Ms. Cheryl Collins, Program Manager, Docket Operations, telephone 202–366–9826, toll free 1–800–647–5527.

**SUPPLEMENTARY INFORMATION:**

### Table of Contents for Preamble

I. Public Participation and Comments
II. Abbreviations
III. Discussion
IV. Regulatory Analyses
A. Regulatory Planning and Review
B. Small Entities
C. Assistance for Small Entities
D. Collection of Information
E. Federalism
F. Unfunded Mandates Reform Act
G. Taking of Private Property
H. Civil Justice Reform
I. Protection of Children
J. Indian Tribal Governments
K. Energy Effects
L. Technical Standards
M. Environment

### I. Public Participation and Comments

We encourage you to submit comments (or related material) on this rulemaking. We will consider all submissions and may adjust our final action based on your comments. Comments should be marked with docket number USCG–2013–0423 and should provide a reason for each suggestion or recommendation. You should provide personal contact information so that we can contact you if we have questions regarding your comments; but please note that all comments will be posted to the online docket without change and that any personal information you include can be searchable online.[1]

Mailed or hand-delivered comments should be in an unbound 8½ × 11 inch format suitable for reproduction. The Docket Management Facility will acknowledge receipt of mailed comments if you enclose a stamped, self-addressed postcard or envelope with your submission.

Documents mentioned in this notice, and all public comments, are in our online docket at *http://www.regulations.gov* and can be viewed by following the Web site's instructions. You can also view the docket at the Docket Management Facility (see the mailing address under **ADDRESSES**) between 9 a.m. and 5 p.m., Monday through Friday, except Federal holidays.

We are not planning to hold a public meeting but will consider doing so if public comments indicate a meeting would be helpful. We would issue a separate **Federal Register** notice to announce the date, time, and location of such a meeting.

[1] *See* the **Federal Register** Privacy Act notice regarding our public dockets, 73 FR 3316, Jan. 17, 2008.

### II. Abbreviations

DHS—Department of Homeland Security
E.O.—Executive Order
FR—Federal Register
IBC Code—International Code for the Construction and Equipment of Ships Carrying Dangerous Chemicals in Bulk
IMO—International Maritime Organization
MARPOL—International Convention for the Prevention of Pollution from Ships, 1973
MEPC—Marine Environment Protection Committee
NLS—Noxious liquid substance
SOLAS—International Convention for the Safety of Life at Sea
§—Section Symbol
U.S.C.—United States Code

### III. Discussion

*Basis and purpose.* The legal basis of this rulemaking is 46 U.S.C. 3703, which requires the Secretary of the department in which the Coast Guard is operating to prescribe regulations relating to the operation of vessels that carry liquid bulk dangerous cargoes, and to the types and grades of cargo those vessels carry. Additional regulatory authority is provided by 33 U.S.C. 1903 (regulations to implement the International Convention for the Prevention of Pollution from Ships, 1973, or ''MARPOL''), 46 U.S.C. 2103 (general merchant marine regulatory authority), and 46 U.S.C. 3306 (regulations for the safety of individuals and property on inspected vessels). The Secretary's authority under these statutes is delegated to the Coast Guard in DHS Delegation No. 0170.1, para.II (77), (92.a), and (92.b).

The purpose of the rulemaking is to update and revise regulatory tables that list liquid hazardous materials, liquefied gases, and compressed gases that have been approved for maritime transportation in bulk, and that indicate how each cargo is categorized by its pollution risk and safe carriage requirements.

*2013 Interim Rule.* The Coast Guard published an interim rule on this topic in 2013.[2] Acknowledging public comments that brought to light certain errors in the interim rule, the Coast Guard delayed its effective date, originally September 16, 2013, on three occasions, most recently until January 16, 2017.[3] We are correcting those errors

[2] ''2012 Liquid Chemical Categorization Updates; Interim Rule,'' 78 FR 50147 (Aug. 16, 2013). Because the interim rule contained information updated only through December 2012, it bore the heading ''2012 Liquid Chemical Categorization Updates.'' This SNPRM is headed ''2013 Liquid Chemical Categorization Updates'' because it has been updated as of the December 2013 MEPC Circular, but the SNPRM shares the same docket with the interim rule.

[3] *See* 78 FR 56837 (Sep. 16, 2013; delayed until Jan. 16, 2014); 79 FR 2106 (Jan. 13, 2014; delayed

in this supplemental notice of proposed rulemaking (SNPRM). In addition, given the lapse of time since we published the interim rule, we propose updating the interim rule's tables as of December 2013. Therefore, we are issuing an SNPRM, rather than proceeding directly from the 2013 interim rule to a final rule, so that, in the interest of ensuring the accuracy of our tables, we can take another round of public comments before issuing a final rule.

*Purpose of tables.* Coast Guard regulations in 46 CFR subchapter D (tank vessels, parts 30 through 39) and subchapter O (certain bulk dangerous cargoes, parts 150 through 155) contain requirements for ensuring the safe maritime carriage (transportation) of certain bulk liquid cargoes. Tables in subchapters D and O list the cargoes that have been approved for maritime carriage. They also categorize each cargo's pollution-hazard risk and safe carriage requirements in accordance with the Coast Guard and International Maritime Organization (IMO) assessment and review processes described in the following paragraphs. This information is of value to vessel owners and operators and to shippers of the cargoes involved.

*Initial cargo assessment.* If a vessel owner or operator plans to ship a newly-developed chemical substance internationally, as a bulk liquid cargo, the new cargo's chemical properties need to be assessed to ensure safe carriage.[4] Our tables contain cargo categorization information that derives from this initial assessment.

Agencies responsible for administering international maritime treaties (for the U.S., this is the Coast Guard) must agree on the new cargo's assessment before the cargo can be approved for transportation. This is done by a ''tripartite agreement'' entered into by the administrations of the exporting country, the importing country, and the country in which the ship that will carry the cargo is registered. The tripartite agreement categorizes the cargo's pollution-hazard risk and flammability/combustibility in accordance with the International Code for the Construction and Equipment of Ships Carrying Dangerous Chemicals in Bulk (IBC Code).[5] A copy of the tripartite agreement is forwarded to the IMO's Marine Environment Protection Committee (MEPC) and to the administration of every country that is signatory to the IBC Code.

The Coast Guard is unique among IBC Code–signatory administrations because, in addition to the categorizations contained in the tripartite agreement, it also assigns each cargo to a ''compatibility group.'' This grouping guides IBC signatories and shippers in determining which cargoes, based on chemical analyses and test data submitted by manufacturers, would be chemically incompatible with other cargoes and therefore cannot safely be shipped with those other cargoes in adjacent tanks, without special precautions.[6] Our tables also reflect these compatibility groupings.

*IMO assessment.* Upon receipt of a tripartite agreement, the MEPC conducts its own multi-year review and assessment of the information contained in the tripartite agreement, and following that review, either validates or modifies the agreement's information. Our tables also reflect any modifications resulting from this IMO assessment.

Each December, the MEPC releases a circular listing each new cargo for which it has completed its review of the cargo's tripartite agreement. The circular lists the countries that have approved international maritime transportation of each new cargo, and provides information about the cargo's pollution-hazard risk and flammability/combustibility. Thus, if a tripartite agreement has approved a cargo for international bulk maritime transportation and the MEPC validates or modifies that information, eventually it will be listed in the MEPC circular.

Periodically, the IBC Code is revised, and cargoes listed in MEPC annual circulars since the last edition of the IBC Code are incorporated. The IBC Code was last comprehensively revised in 2007, at which time the previous pollution categorization scheme (categories A, B, C, and D, which indicate a cargo's relative pollution-hazard risk) were replaced by categories X, Y, Z, and OS (for ''other cargoes,'' which at present are considered to pose no risk).[7] Our tables are intended to reflect the latest IBC Code revision, but until this rulemaking, they were not updated to incorporate the changes made by the 2007 IBC Code revision.

*IMO actions reflected in this rulemaking.* In March 2012, the IMO published an Annex to the 2007 IBC Code, listing additional cargoes with their pollution categorizations.

Until we published our 2013 interim rule, the tables in subchapter D and subchapter O had gone unamended for several years, and still contained the pre-2007 pollution categorizations. The interim rule updated the following tables as of the December 2012 MEPC circular:

- ''Table 30.25–1'' in subchapter D;
- ''Table I to Part 150'' in subchapter O;
- ''Table II to Part 150'' in subchapter O; and
- ''Table 2 to Part 153'' in subchapter O.

This supplemental notice of proposed rulemaking (SNPRM) proposes updating these tables as of the December 2013 circular. All four tables include cargoes that are listed either in MEPC circulars, or in tripartite agreements to which the U.S. is a party. (Information from other tripartite agreements is excluded pending MEPC review.)

*Table contents.* Table 30.25–1 lists flammable or combustible cargoes that, when transported in bulk, must be certificated under subchapter D regulations.

The two tables in part 150 contain the Coast Guard chemical compatibility categorization for each cargo. Table I lists all cargoes alphabetically and provides a category group for each. Table II lists cargoes by group.

Table 2 to Part 153 lists cargoes that, when carried in bulk on non-oceangoing barges, are not subject to subchapter D or O regulations, but that must comply with subchapter O if they are carried on oceangoing ships.[8]

*Comments on 2013 interim rule and resulting changes.* Our interim rule prompted comments from two individuals and four industry representatives, one of whom made multiple submissions. The two

until Jan. 16, 2015); 79 FR 68131 (Nov. 14, 2014; delayed until Jan. 16, 2017).

[4] For Coast Guard approval to ship a cargo not previously approved for carriage, *see* 46 CFR 153.900.

[5] The IBC Code contains international standards for the safe maritime bulk transportation of dangerous and noxious liquid chemicals in accordance with MARPOL and the International Convention for the Safety of Life at Sea (SOLAS).

[6] *See* 46 CFR 150.120, 150.130, and Figure 1 to Part 150 (a compatibility matrix for determining how cargoes should be grouped).

[7] *See* MARPOL, Annex II, Chapter 2, Regulation 6. With respect to the discharge of a cargo into the sea from tank cleaning or deballasting operations and the resulting hazard posed to marine resources or human health, the new categories indicate:

- X = Major hazard justifying prohibition of the discharge;
- Y = Hazard justifying a limitation on the quality and quantity of the discharge;
- Z = Minor hazard justifying less stringent restrictions on the quality and quantity of the discharge; and
- OS = No harm that justifies special discharge requirements

[8] Table 1 to Part 153, ''Summary of Minimum Requirements [for safe carriage]'' is not amended by this rulemaking. It lists a fuller list of minimum safe carriage requirements than those contained in the tables that this rulemaking amends. Because of Table 1's greater complexity, it may be the subject of a future rulemaking, pending study and recommendations from the Coast Guard's Chemical Transportation Advisory Committee.

individuals commented on the safety of food containing genetically modified organisms. That is not an issue raised by our rulemaking and therefore is beyond its scope.

Three commenters asked why we had not discussed draft table updates with the Chemical Transportation Advisory Committee (CTAC), a group that advises the Coast Guard on chemical transportation matters, and suggested that consultation with CTAC could be helpful, along with more time for industry to review the interim rule before it took effect. CTAC operates pursuant to the Federal Advisory Committee Act, which requires advisory committees to operate under a valid charter.[9] From 2009 until 2013, the period during which we developed the interim rule, CTAC lacked such a charter and therefore was not operational. Since its reestablishment in 2013, we have kept CTAC apprised as to this rulemaking's status, but at no time has CTAC expressed the desire to make formal recommendations to the Coast Guard as to the rulemaking's direction. We are open to future CTAC recommendations, and individual CTAC members are welcome to comment on this SNPRM, as they are on any Coast Guard rulemaking. As to additional industry time for review, we believe the continuing delay in the interim rule's effective date has provided ample additional review time.

Three commenters said that, in Table I to Part 150, we mistakenly listed several cargoes in compatibility group 4, when in the past they have been listed in group 34 and not group 4. We agree this was a mistake and this SNPRM shows the cargoes in group 34.

One commenter asked if we consider that all cargoes shown in Table 30.25–1 or Table 2 to Part 153 as ''n.o.s.'' (''not otherwise specified'') should be assigned in Table I to Part 150 in group 0. We do not. Group 0 is the default assignment for a cargo that we have either determined cannot be shipped safely with any other cargo, or for a cargo for which we are unable to make any other assignment because we lack sufficient chemical analysis and test data on which to make that assignment. These criteria do not necessarily apply to an ''n.o.s.'' cargo, and therefore we assign many ''n.o.s.'' cargoes to compatibility groups other than group 0.

One commenter said that sodium methylate 21–30%, instead of being listed in compatibility group 20, should be listed in group 0 due to its highly reactive nature, and that diglycidyl ether of bisphenol A and F should be listed in compatibility group 18 rather than in group 41. We agree that the interim rule incorrectly listed these cargoes and this SNPRM shows sodium methylate 21–30% in group 0 and diglycidyl ether of bisphenol A and F in group 18.

One commenter addressed the interim rule's amendment to ''Appendix I to Part 150—Exceptions to the Chart.'' The ''chart'' referred to is Figure 1 to Part 150, a matrix showing how cargo compatibility can be determined. Appendix I lists binary combinations of substances that are treated as exceptions to Figure 1 because they have been tested and found not to be dangerously reactive. One commenter said that our revision of Appendix I failed to list between 10 and 15 previously approved exceptions. We agree and this SNPRM restores those exceptions to Appendix I.

One commenter said we should have expanded the interim rule's discussion of tripartite agreements, and we have done so accordingly in the ''Background'' section of this SNPRM. In addition to the changes we have made in response to comments, we are also restoring liquefied flammable gas listings in subchapter D's Table 30.25–1. We removed those listings in the interim rule, in anticipation of a policy change that would have allowed them to fall exclusively under subchapter O. That policy change has not occurred and we have restored the listings in this SNPRM.

It is our intention, for future years, to keep the tables updated annually.This SNPRM proposes the addition of new entries that would bring them up to date as of the December 2013 MEPC Circular.

We specifically request public comment on whether or not this SNPRM's information is correct, and in particular whether or not we have correctly and fully responded to comments on the interim rule and brought our information up to date as of December 2013.

## IV. Regulatory Analyses

### *A. Regulatory Planning and Review*

Executive Orders (E.O.s) 12866 (''Regulatory Planning and Review'') and 13563 (''Improving Regulation and Regulatory Review'') direct agencies to assess the costs and benefits of available regulatory alternatives and, if regulation is necessary, to select regulatory approaches that maximize net benefits (including potential economic, environmental, public health and safety effects, distributive impacts, and equity). Executive Order 13563 emphasizes the importance of quantifying both costs and benefits, of reducing costs, of harmonizing rules, and of promoting flexibility. This proposed rule has not been designated a ''significant regulatory action'' under section 3(f) of E.O. 12866. Accordingly, the proposed rule has not been reviewed by the Office of Management and Budget. A draft regulatory assessment is included herein.

#### *Affected Population*

This proposed rule updates tables that list the names, pollution risk categorizations, and safe carriage requirements of liquid chemical cargoes that have already been categorized and approved for maritime transportation in bulk, either permanently or on a provisional basis. This proposed rule makes no new decisions about whether any specific chemical cargo should be approved for bulk maritime transportation, about how any specific cargo should be categorized, or about carriage requirements that should apply to any specific cargo. It simply provides updated information about cargoes that are currently approved for maritime transportation in bulk, and the cargo's pollution categorization and minimum transportation safety requirements. This proposed rule indirectly applies to the carriage of the subject cargoes from the following tank vessel populations as described in 46 CFR 30.01–5, 150.115 (with exceptions described in 46 U.S.C. 3702), 153.1, and 154.5 as described therein. All U.S. tank vessels are included. Foreign tank vessels are, in general, exempt from this regulation when on innocent passage through U.S. waters, except for liquefied gas cargo/cargo residue or vapor carriers. Also included are self-propelled bulk cargo carrying oceangoing/non-oceangoing U.S.-flag and oceangoing foreign-flag vessels when in U.S. waters.

#### *Costs*

This proposed rule updates tables that list the names, pollution risk categorizations, and safe carriage requirements of liquid chemical cargoes that have already been categorized and approved by the United States and the IMO for maritime transportation in bulk, either permanently or on a provisional basis. Since this proposed rule simply updates tables and a table preface to reflect decisions already made under international law about which liquid chemical cargoes are approved for bulk maritime transportation, and about how those cargoes should be categorized with respect to their pollution potential, it does not change established shipping requirements and there are no private sector costs expected from this supplemental notice of proposed rule.

[9] 5 U.S.C. Appendix 2, sec. 9(c).

The only party that will incur any cost will be the Coast Guard. This cost is for 40 hours total of updating work on approximately 50 chemicals per year, for an approximate annual cost of $3,200. The cost is based on 40 hours times the loaded hourly cost to the Coast Guard (wages and employee benefits) of employing a GS–13 or equivalent ($80). The source for this is Commandant Instruction 7310.1P (*http://www.uscg.mil/directives/ci/7000–7999/CI_7310_1P.pdf*).

In addition, the proposals would correct errors and omissions in the interim rule and bring the tables current through December 2013. This proposed rule incorporates Coast Guard compatibility categorizations and chemical cargoes and categorizations listed by the IMO through its December 2013 MEPC Circular.

Benefits

The primary benefit of this proposed rule is to conform regulatory language to practices currently allowed by the Coast Guard through either individual letters of approval or the IBC Code as discussed above, which we expect will result in the benefit of improved service to the public through improved clarity and transparency.

*B. Small Entities*

Under the Regulatory Flexibility Act (5 U.S.C. 601–612) (RFA), we have considered whether this proposed rule would have a significant economic impact on a substantial number of small entities. The term ''small entities'' comprises small businesses, not-for-profit organizations that are independently owned and operated and are not dominant in their fields, and governmental jurisdictions with populations of less than 50,000. Since this proposed rule does not impose any additional direct costs, it does not impose any additional direct costs on small entities as defined by the RFA. Therefore, the Coast Guard certifies that under 5 U.S.C. 605(b), the proposed rule will not have a significant economic impact on a substantial number of small entities.

If you think that your business, organization, or governmental jurisdiction qualifies as a small entity and that this rule would have a significant economic impact on it, please submit a comment to the Docket Management Facility at the address under **ADDRESSES**. In your comment, explain why you think it qualifies and how and to what degree this rule would economically affect it.

*C. Assistance for Small Entities*

Under section 213(a) of the Small Business Regulatory Enforcement Fairness Act of 1996 (Pub. L. 104–121), we want to assist small entities in understanding this rule so that they can better evaluate its effects on them and participate in the rulemaking. If this proposed rule would affect your small business, organization, or governmental jurisdiction and you have questions concerning its provisions or options for compliance, please consult Mr. Patrick Keffler at *Patrick.A.Keffler@uscg.mil*. The Coast Guard will not retaliate against small entities that question or complain about this proposed rule or any policy or action of the Coast Guard.

*D. Collection of Information*

This proposed rule would call for no new collection of information under the Paperwork Reduction Act of 1995 (44 U.S.C. 3501–3520). This proposed rule simply updates and revises tables that list cargoes that have been approved and categorized for bulk maritime transportation, which does not involve information collection.

*E. Federalism*

A rule has implications for federalism under E.O. 13132 (''Federalism'') if it has a substantial direct effect on the States, on the relationship between the national government and the States, or on the distribution of power and responsibilities among the various levels of government. We have analyzed this proposed rule under that E.O. and have determined that it is consistent with the fundamental federalism principles and preemption requirements described in the E.O. Our analysis follows.

It is well-settled that States may not regulate in categories reserved for regulation by the Coast Guard, including categories for inspected vessels. It is also well-settled, that all of the categories covered in 46 U.S.C. 3306, 3703, 7101, and 8101 (design, construction, alteration, repair, maintenance, operation, equipping, personnel qualification, and manning of vessels), as well as the reporting of casualties and any other category in which Congress intended the Coast Guard to be the sole source of a vessel's obligations, are within fields foreclosed from regulation by the States (See the decision of the Supreme Court in the consolidated cases of *United States* v. *Locke* and *Intertanko* v. *Locke,* 529 U.S. 89 (2000). This proposed rule amends existing regulations for inspected vessels carrying certain bulk dangerous cargoes, which, under the principles discussed in *Locke,* fall within the categories enumerated in 46 U.S.C. 3306 and 3703, which are themselves within fields in which the states are foreclosed from regulating. Therefore, because the States may not regulate within these categories, this rule is consistent with the fundamental federalism principles and preemption requirements described in E.O. 13132.

While it is well settled that States may not regulate in categories in which Congress intended the Coast Guard to be the sole source of a vessel's obligations, the Coast Guard recognizes the key role that State and local governments may have in making regulatory determinations. Additionally, for rules with federalism implications and preemptive effect, Executive Order 13132 specifically directs agencies to consult with State and local governments during the rulemaking process. If you believe this proposed rule has implications for federalism under Executive Order 13132, please contact the person listed in the **FOR FURTHER INFORMATION CONTACT** section of this preamble.

*F. Unfunded Mandates Reform Act*

The Unfunded Mandates Reform Act of 1995 (2 U.S.C. 1531–1538) requires Federal agencies to assess the effects of their discretionary regulatory actions. In particular, the Act addresses actions that may result in the expenditure by a State, local, or tribal government, in the aggregate, or by the private sector of $100,000,000 (adjusted for inflation) or more in any one year. Though this proposed rule will not result in such an expenditure, we do discuss the effects of this rule elsewhere in this preamble.

*G. Taking of Private Property*

This proposed rule will not cause a taking of private property or otherwise have taking implications under E.O. 12630 (''Governmental Actions and Interference with Constitutionally Protected Property Rights'').

*H. Civil Justice Reform*

This proposed rule meets applicable standards in sections 3(a) and 3(b)(2) of E.O. 12988 (''Civil Justice Reform'') to minimize litigation, eliminate ambiguity, and reduce burden.

*I. Protection of Children*

We have analyzed this proposed rule under E.O. 13045 (''Protection of Children from Environmental Health Risks and Safety Risks''). This proposed rule is not an economically significant rule and does not create an environmental risk to health or risk to

safety that may disproportionately affect children.

*J. Indian Tribal Governments*

This proposed rule does not have tribal implications under E.O. 13175 (''Consultation and Coordination with Indian Tribal Governments'') because it does not have a substantial direct effect on one or more Indian tribes, on the relationship between the Federal Government and Indian tribes, or on the distribution of power and responsibilities between the Federal Government and Indian tribes.

*K. Energy Effects*

We have analyzed this proposed rule under E.O. 13211 (''Actions Concerning Regulations That Significantly Affect Energy Supply, Distribution, or Use''). We have determined that it is not a ''significant energy action'' under that E.O. because it is not a ''significant regulatory action'' under E.O. 12866 and is not likely to have a significant adverse effect on the supply, distribution, or use of energy. The Administrator of the Office of Information and Regulatory Affairs has not designated it as a significant energy action. Therefore, it does not require a Statement of Energy Effects under E.O. 13211.

*L. Technical Standards*

The National Technology Transfer and Advancement Act (15 U.S.C. 272 note) directs agencies to use voluntary consensus standards in their regulatory activities unless the agency provides Congress, through the OMB, with an explanation of why using these standards would be inconsistent with applicable law or otherwise impractical. Voluntary consensus standards are technical standards (*e.g.,* specifications of materials, performance, design, or operation; test methods; sampling procedures; and related management systems practices) that are developed or adopted by voluntary consensus standards bodies. This proposed rule does not use technical standards. Therefore, we did not consider the use of voluntary consensus standards.

*M. Environment*

We have analyzed this proposed rule under Department of Homeland Security Management Directive 023–01 and Commandant Instruction M16475.lD, which guide the Coast Guard in complying with the National Environmental Policy Act of 1969 (NEPA)(42 U.S.C. 4321–4370f), and have made a preliminary determination that this action is one of a category of actions that do not individually or cumulatively have a significant effect on the human environment. A preliminary environmental analysis checklist supporting this determination is available in the docket where indicated under the ''Public Participation and Comments'' section of this preamble. This proposed rule involves administrative updates of existing chemical transport regulations and updates provisions relating to the chemical properties of liquid chemical cargoes approved for maritime transportation in bulk. The update incorporates changes in how approved cargoes are categorized by their chemical properties. This proposed rule promotes the Coast Guard's maritime safety and stewardship missions. It is therefore included in the Coast Guard's Commandant Instruction (COMDTINST) M16475.1D, Figure 2–1, which includes categorical exclusions (CEs) under categories (34)(a), ''regulations which are editorial or procedural, such as those updating addresses or establishing application procedures,'' and 34 (d), ''regulations concerning manning, documentation, admeasurement, inspection, and equipping of vessels,'' as well as in the ''Appendix to National Environmental Policy Act: Coast Guard Procedures for Categorical Exclusions, Notice of Final Agency Policy'' (see 67 FR 48243, July 23, 2002) under paragraph 6 (a), ''regulations concerning vessel operation safety standards . . . equipment approval, and/or equipment carriage requirements . . . and visual distress signals.'' We seek any comments or information that may lead to the discovery of a significant environmental impact from this proposed rule.

**List of Subjects**

*46 CFR Part 30*

Cargo vessels, Foreign relations, Hazardous materials transportation, Penalties, Reporting and recordkeeping requirements, Seamen.

*46 CFR Part 150*

Hazardous materials transportation, Marine safety, Occupational safety and health, Reporting and recordkeeping requirements.

*46 CFR Part 153*

Administrative practice and procedure, Cargo vessels, Hazardous materials transportation, Marine safety, Reporting and recordkeeping requirements, Water pollution control.

For the reasons set out in the preamble, the Coast Guard proposes to amend 46 CFR parts 30, 150, and 153, as amended by the interim rule published on August 16, 2013 (78 FR 50148), as follows:

**Subchapter D—Tank Vessel**

## PART 30—GENERAL PROVISIONS

■ 1. Revise the authority citation for part 30 to read as follows:

**Authority:** 46 U.S.C. 2103, 3306, 3703; Pub. L. 103–206, 107 Stat. 2439; 49 U.S.C. 5103, 5106; Department of Homeland Security Delegation No. 0170.1, para. II (92.a), (92.b); Section 30.01–2 also issued under the authority of 44 U.S.C. 3507; Section 30.01–05 also issued under the authority of Sec. 4109, Pub. L. 101–380, 104 Stat. 515.

■ 2. Revise § 30.25–1, as amended by the interim rule published on August 16, 2013 (78 FR 50148), effective January 16, 2017, as delayed at 79 FR 68132, November 14, 2014, to read as follows:

**§ 30.25–1 Cargoes carried in vessels certificated under the rules of this subchapter.**

(a) Table 30.25–1 lists flammable or combustible cargoes that, when transported in bulk, must be in vessels certificated under this subchapter D.

(b) A mixture or blend of two or more cargoes appearing in Table 30.25–1 may be transported under this subchapter D.

(c) A mixture or blend of one or more cargoes appearing in Table 30.25–1 and one or more cargoes appearing in Table 2, 46 CFR part 153, may be carried under this subchapter D if the mixture is flammable or combustible.

(d) Any mixture containing one or more cargoes categorized by the International Maritime Organization (IMO) and listed in Table 30.25–1 as a category X, Y, or Z noxious liquid substance (NLS) may be carried in bulk—

(1) Under this subchapter D if the vessel is not regulated under 46 CFR part 153; or

(2) Under part 153 if the vessel is regulated under that part; or alternatively under 33 CFR part 151 if the cargo is listed in 33 CFR 151.49; or

(3) Under 33 CFR part 151 if the cargo is listed in 33 CFR 151.47. Table 30.25–1—List of Flammable and Combustible Bulk Liquid Cargoes

See NOTES at the end of the Table for explanation of symbols and terms used. See Table 2, 46 CFR part 153, for additional cargoes that may be carried by tank barge.

| Cargo name | IMO Annex II Pollution Category |
|---|---|
| **Acetochlor** | **X** |
| Acetone | Z |
| Acetophenone | # |
| Acrylonitrile-Styrene copolymer dispersion in polyether polyol | Y |
| Alcohol(C6–C17)(secondary) poly(3–6)ethoxylates | Y |
| Alcohol(C6–C17)(secondary) poly(7–12)ethoxylates | Y |
| Alcohol(C9–C11) poly(2.5–9)ethoxylate | Y |
| *Alcohol(C12–C15) poly (. . .) ethoxylates, see* Alcohol(C12–C16) poly(. . .) ethoxylates | |
| Alcohol(C12–C16) poly(1–6)ethoxylates | Y |
| Alcohol(C12–C16) poly(7–19)ethoxylates | Y |
| Alcohol(C12–C16) poly(20+)ethoxylates | Y |
| Alcohols (C13+) | Y |
| Alcoholic beverages, n.o.s. | Z |
| Acrylic acid/ethenesulphonic acid copolymer with phosphonate groups, sodium salt solution | Z |
| Aliphatic oil | I |
| Alkanes (C6–C9) | X |
| Iso-and cyclo-alkanes (C10–C11) | Y |
| Iso-and cyclo-alkanes (C12+) | Y |
| n-Alkanes (C10+) | Y |
| Alkaryl polyethers (C9–C20) | Y |
| **Alkenyl(C11+) amide** | **X** |
| Alkenyl(C8+) amine, Alkenyl(C12+) acid ester mixture | # |
| **Alkyl acrylate-Vinylpyridine copolymer in toluene** | **Y** |
| **Alkylbenzene, alkylindane, alkylindene mixture (each C12–C17)** | **Z** |
| **Alkyl(C3–C4) benzenes** | **Y** |
| **Alkyl(C5–C8) benzenes** | **X** |
| **Alkyl(C8–C9) phenylamine in aromatic solvents** | **Y** |
| Alkyl(C9+) benzenes | Y |
| **Alkyl(C11–C17) benzene sulfonic acid** | **Y** |
| Alkylbenzene sulfonic acid (4% or less) | # |
| **Alkyl dithiocarbamate (C19–C35)** | **Y** |
| Alkyl dithiothiadiazole (C6–C24) | Y |
| Alkyl ester copolymer (C4–C20) | Y |
| Alkyl(C7–C11)phenol poly(4–12) ethoxylate | Y |
| *Alkyl phenol sulfide (C8–C40), see* Alkyl(C8–C40) phenol sulfide | |
| Alkyl(C8–C40) phenol sulfide | Z |
| **Alkyl(C8–C9) phenylamine in aromatic solvents** | **Y** |
| Alkyl(C9–C15) phenyl propoxylate | Z |
| **Alkyl(C8–C10) polyglucoside solution (65% or less)** | **Y** |
| **Alkyl(C12–C14) polyglucoside solution (55% or less)** | Y |
| **Alkyl(C8–C10)/(C12–C14):(40% or less/60% or more) polyglucoside solution (55% or less)** | **Y** |
| **Alkyl(C8–C10)/(C12–C14):(60% or more/40% or less) polyglucoside solution (55% or less)** | **Y** |
| **Alkyl(C8–C10)/(C12–C14):(50%/50%) polyglucoside solution (55% or less)** | **Y** |
| **Alkyl(C10–C20, saturated and unsaturated) phosphite** | **Y** |
| *n-Alkyl phthalates, see individual phthalates* | |
| Alkyl sulfonic acid ester of phenol | Y |
| Aluminium hydroxide, sodium | Y |
| Aminoethyldiethanolamine/Aminoethylethanolamine solution | Z |
| **2-Amino-2-methyl-1-propanol** | **Z** |
| Amyl acetate (all isomers) | Y |
| Amyl alcohol (iso-, n-, sec-, primary, tert-) | Z |
| **tert-Amyl ethyl ether** | **Z** |
| tert-Amyl methyl ether | X |
| *Amyl methyl ketone, see* Methyl amyl ketone | |
| *Amylene, see* Pentene (all isomers) | |
| Animal acid oil | # |
| Animal and Fish acid oils and distillates, n.o.s. | # |
| Animal and Fish oils, n.o.s. | # |
| Animal oil | # |
| Aromatic oil | I |
| Aryl polyolefins (C11–C50) | Y |
| Asphalt | I |
| Asphalt blending stocks: | |
| Roofers flux | I |
| Straight run residue | I |
| **Aviation alkylates (C8 paraffins and iso-paraffins BPT 95–120°C)** | **X** |
| Barium long-chain alkyl (C8–C14) phenate sulfide | # |
| Beechnut oil | # |
| *Behenyl alcohol, see* Alcohols (C13+) | |
| Benzene tricarboxylic acid, trioctyl ester | Y |

| Cargo name | IMO Annex II Pollution Category |
|---|---|
| **Benzyl acetate** | **Y** |
| Benzyl alcohol | Y |
| Bis(2-ethylhexyl) terephthalate | Y |
| Brake fluid base mix: Poly(2–8)alkylene(C2–C3) glycols/Polyalkylene(C2–C10) glycols monoalkyl(C1–C4) ethers and their borate esters. | Z |
| Butane | LFG |
| *Butene, see* Butylene | |
| Butene oligomer | X |
| 2-Butoxyethanol (58%)/Hyperbranched polyesteramide (42%) (mixture) | Y |
| Butyl acetate (all isomers) | Y |
| *Butyl alcohol (iso-, n-, sec-, tert-), see* Butyl alcohol (all isomers) | |
| Butyl alcohol (all isomers) | Z |
| **Butylbenzene (all isomers)** | **X** |
| Butyl benzyl phthalate | X |
| **Butyl butyrate (all isomers)** | **Y** |
| Butylene | LFG |
| Butylene glycol | Z |
| *1,3-Butylene glycol, see* Butylene glycol | |
| iso-Butyl formate | # |
| n-Butyl formate | # |
| Butyl heptyl ketone | # |
| *Butyl methyl ketone, see* Methyl butyl ketone | |
| n-Butyl propionate | Y |
| Butyl stearate | # |
| Butyl toluene | # |
| gamma-Butyrolactone | Y |
| Calcium alkyl(C9)phenol sulfide, polyolefin phosphorosulfide mixture | # |
| *Calcium alkyl salicylate, see* Calcium long-chain alkyl salicylate (C13+) | |
| Calcium long-chain alkaryl sulfonate (C11–C50) | # |
| *Calcium long-chain alkyl phenate (C8–C40), see* Calcium long-chain alkyl(C5–C10) phenate *or* Calcium long-chain alkyl(C11–C40) phenate. | |
| Calcium long-chain alkyl(C5–C10) phenate | Y |
| Calcium long-chain alkyl(C11–C40) phenate | Y |
| Calcium long-chain alkyl phenolic amine (C8–C40) | # |
| Calcium long-chain alkyl salicylate (C13+) | Y |
| *Camelina oil* | Y |
| *Candelilla wax, see* Waxes | |
| *Caprolactam solutions, see* epsilon-Caprolactam (molten or aqueous solutions) | |
| **epsilon-Caprolactam (molten or aqueous solutions)** | **Z** |
| *Carnauba wax, see* Waxes | |
| *Cetyl alcohol, see* Alcohols (C13+) | |
| *Cetyl-stearyl alcohol, see* Alcohols (C13+) | |
| **Chlorinated paraffins (C10–C13)** | **X** |
| **1-(4-Chlorophenyl)-4,4-dimethyl-pentan-3-one** | **Y** |
| **Citric acid (70% or less)** | **Z** |
| Clarified oil | I |
| Coal oil | # |
| **Coconut oil fatty acid methyl ester** | **Y** |
| Cod liver oil | # |
| Copper salt of long-chain (C17+) alkanoic acid | Y |
| Corn acid oil | # |
| Cotton seed acid oil | # |
| *Cotton seed, fatty acid, see* Cotton seed oil, fatty acid | |
| Cotton seed oil, fatty acid | # |
| Crude Isononylaldehyde | # |
| Crude Isopropanol | Z |
| † Crude oil | I |
| *Cumene, see* Propylbenzene (all isomers) | |
| **Cycloheptane** | **X** |
| Cyclohexane | Y |
| Cyclohexanol | Y |
| **Cyclohexyl acetate** | **Y** |
| 1,3-Cyclopentadiene dimer (molten) | Y |
| **Cyclopentane** | **Y** |
| **Cyclopentene** | **Y** |
| p-Cymene | Y |
| Dark mixed acid oil | # |
| Decahydronaphthalene | Y |
| iso-Decaldehyde | # |
| n-Decaldehyde | # |

| Cargo name | IMO Annex II Pollution Category |
|---|---|
| *Decane, see* n-Alkanes (C10+) | |
| **Decanoic acid** | **X** |
| Decene | X |
| Decyl acetate | # |
| Decyl alcohol (all isomers) | Y |
| *n-Decylbenzene, see* Alkyl(C9+)benzenes | |
| *Detergent alkylate, see* Alkyl(C9+)benzenes | |
| Diacetone alcohol | Z |
| *Dialkyl(C10–C14) benzenes, see* Alkyl(C9+) benzenes | |
| Dialkyl(C8–C9) diphenylamines | Z |
| Dialkyl(C7–C13) phthalates | X |
| *Including:* | |
| *Diisodecyl phthalate* | |
| *Diisononyl phthalate* | |
| *Dinonyl phthalate* | |
| *Ditridecyl phthalate* | |
| *Diundecyl phthalate* | |
| *Dibutyl carbinol, see* Nonyl alcohol (all isomers) | |
| **Dibutyl hydrogen phosphonate** | **Y** |
| **2,6-Di-ter*t*-butylphenol** | **X** |
| **Dibutyl phthalate** | **X** |
| *ortho-Dibutyl phthalate, see* Dibutyl phthalate | |
| **Dibutyl terephthalate** | **Y** |
| *Dicyclopentadiene, see* 1,3-Cyclopentadiene dimer (molten) | |
| Diesel oil | I |
| Diethylbenzene | Y |
| Diethylene glycol | Z |
| *Diethylene glycol butyl ether, see* Poly(2–8)alkylene glycol monoalkyl(C1–C6) ether | |
| *Diethylene glycol butyl ether acetate, see* Poly(2–8) alkylene glycol monoalkyl(C1–C6) ether acetate | |
| Diethylene glycol diethyl ether | Z |
| *Diethylene glycol ethyl ether, see* Poly(2–8) alkylene glycol monoalkyl(C1–C6) ether | |
| *Diethylene glycol ethyl ether acetate, see* Poly(2–8) alkylene glycol monoalkyl (C1–C6) ether acetate | |
| *Diethylene glycol n-hexyl ether, see* Poly (2–8) alkylene glycol monoalkyl (C1–C6) ether | |
| *Diethylene glycol methyl ether, see* Poly(2–8) alkylene glycol monoalkyl (C1–C6) ether | |
| *Diethylene glycol methyl ether acetate, see* Poly(2–8) alkylene glycol monoalkyl (C1–C6) ether acetate | |
| Diethylene glycol phenyl ether | # |
| Diethylene glycol phthalate | Y |
| *Diethylene glycol propyl ether, see* Poly(2–8) alkylene glycol monoalkyl (C1–C6) ether | |
| Di-(2-ethylhexyl) adipate | Y |
| *Di-(2-ethylhexyl )phthalate, see* Dioctyl phthalate | |
| Diethyl phthalate | Y |
| Diglycidyl ether of bisphenol A | X |
| **Diglycidyl ether of bisphenol F** | **Y** |
| Diheptyl phthalate | Y |
| **Di-n-hexyl adipate** | **X** |
| Dihexyl phthalate | Y |
| *Diisobutyl carbinol, see* Nonyl alcohol (all isomers) | |
| Diisobutylene | Y |
| Diisobutyl ketone | Y |
| Diisobutyl phthalate | X |
| *Diisodecyl phthalate, see* Dialkyl (C7–C13) phthalates | |
| Diisononyl adipate | Y |
| *Diisononyl phthalate, see* Dialkyl (C7–C13) phthalates | |
| Diisooctyl phthalate | Y |
| Diisopropylbenzene (*all isomers*) | X |
| Diisopropylnaphthalene | Y |
| Dimethyl adipate | X |
| *Dimethylbenzene, see* Xylenes | |
| Dimethyl glutarate | Y |
| **Dimethyl octanoic acid** | **Y** |
| Dimethyl phthalate | Y |
| Dimethylpolysiloxane | Y |
| 2,2-Dimethylpropane-1,3-diol (molten or solution) | Z |
| Dimethyl succinate | Y |
| Dinonyl phthalate | Y |
| Dioctyl phthalate | X |
| Dipentene | Y |
| Diphenyl | X |
| **Diphenylamine (molten)** | **Y** |
| **Diphenylamines, alkylated** | **Y** |

| Cargo name | IMO Annex II Pollution Category |
|---|---|
| Diphenyl/Diphenyl ether mixtures | X |
| Diphenyl ether | X |
| Diphenyl ether/Diphenyl phenyl ether mixture | X |
| **Diphenylol propane-epichlorohydrin resins** | **X** |
| Dipropylene glycol | Z |
| *Dipropylene glycol butyl ether, see* Poly (2–8) alkylene glycol monoalkyl(C1–C6) ether | |
| Dipropylene glycol dibenzoate | # |
| *Dipropylene glycol methyl ether, see* Poly (2–8)alkylene glycol monoalkyl (C1–C6) ether | |
| **Dithiocarbamate ester (C7–C35)** | **X** |
| Distillates: | |
| Flashed feed stocks | I |
| Straight run | I |
| Diundecyl phthalate | Y |
| Dodecane (all isomers) | Y |
| *Dodecanol, see* Dodecyl alcohol | |
| Dodecene (all isomers) | X |
| Dodecyl alcohol | Y |
| *Dodecyl benzene, see* Alkyl (C9+) benzenes | |
| Dodecyl hydroxypropyl sulfide | X |
| Dodecyl phenol | X |
| Dodecyl xylene | Y |
| **Drilling brines (containing zinc salts) (if flammable or combustible)** | **X** |
| **Drilling brines, including: calcium bromide solution, calcium chloride solution and sodium chloride solution (if flammable or combustible)**. | **Z** |
| Drilling mud (low toxicity) (if flammable or combustible) | # |
| Ethane | LFG |
| *ETBE, see* Ethyl tert-butyl ether | |
| 2-Ethoxyethyl acetate | Y |
| *Ethoxylated alkyloxy alkyl amine, see* Ethoxylated long-chain (C16+) alkyloxyalkylamine | |
| Ethoxy triglycol (crude) | # |
| Ethyl acetate | Z |
| Ethyl acetoacetate | Z |
| Ethyl alcohol | Z |
| Ethyl amyl ketone | Y |
| Ethylbenzene | Y |
| Ethyl butanol | # |
| Ethyl tert-butyl ether | Y |
| Ethyl butyrate | Y |
| Ethyl cyclohexane | Y |
| **Ethylene** | **LFG** |
| **S-Ethyl dipropylthiocarbamate** | **Y** |
| Ethylene carbonate | Z |
| Ethylene glycol | Y |
| Ethylene glycol acetate | Y |
| Ethylene glycol butyl ether acetate | Y |
| Ethylene glycol diacetate | Y |
| Ethylene glycol dibutyl ether | # |
| *Ethylene glycol ethyl ether acetate, see* 2-Ethoxyethyl acetate | |
| Ethylene glycol methyl butyl ether | # |
| Ethylene glycol methyl ether acetate | Y |
| Ethylene glycol phenyl ether | Z |
| Ethylene glycol phenyl ether/Diethylene glycol phenyl ether mixture | Z |
| Ethyl-3-ethoxypropionate | Y |
| *2-Ethylhexaldehyde, see* Octyl aldehydes | |
| 2-Ethylhexanoic acid | Y |
| *Ethylhexoic acid, see* 2-Ethylhexanoic acid | |
| *2-Ethylhexanol, see* Octanol (all isomers) | |
| Ethyl hexyl phthalate | # |
| 2-Ethyl-2-(hydroxymethyl) propane-1,3-diol, (C8–C10) ester | Y |
| Ethyl propionate | Y |
| Ethyl toluene | Y |
| Fatty acid (saturated, C13+) | Y |
| **Fatty acids, (C16+)** | **Y** |
| **Fatty acids, essentially linear (C6–C18) 2-ethylhexyl ester** | **Y** |
| Fish acid oil | # |
| Formamide | Y |
| Furfuryl alcohol | Y |
| † Gas oil, cracked | I |
| Gas oil, high pour | I |
| Gas oil, low pour | I |

| Cargo name | IMO Annex II Pollution Category |
|---|---|
| Gas oil, low sulfur | I |
| Gasoline blending stocks: | |
| Alkylates | I |
| † Reformates | I |
| Gasolines: | |
| † Automotive (*containing not over 4.23 grams lead per gallon*) | I |
| † Aviation (*containing not over 4.86 grams lead per gallon*) | I |
| Casinghead (*natural*) | I |
| Polymer | I |
| † Straight run | I |
| Gasoline (Natural gas condensate) | I |
| Glucitol/glycerol blend propoxylated (containing 10% or more amines) | Y |
| Glycerine | Z |
| Glycerine (83%), Dioxanedimethanol (17%) mixture | # |
| *Glycerol, see* Glycerine | |
| **Glycerol ethoxylated** | **OS** |
| Glycerol monooleate | Y |
| Glycerol polyalkoxylate | # |
| **Glycerol, propoxylated and ethoxylated** | **Z** |
| **Glycerol/sucrose blend propoxylated and ethoxylated** | **Z** |
| Glyceryl triacetate | Z |
| *Glycidyl ester of tridecyl acetic acid, see* Glycidyl ester of C10 trialkylacetic acid | |
| *Glycidyl ester of versatic acid, see* Glycidyl ester of C10 trialkylacetic acid | |
| Glycidyl ester of C10 trialkylacetic acid | Y |
| *Glycol diacetate, see* Ethylene glycol diacetate | |
| *Glycol triacetate, see* Glyceryl triacetate | |
| Glyoxal solution (40% or less) | Y |
| Glyphosate solution (not containing surfactant) | Y |
| Grape Seed Oil | Y |
| Groundnut acid oil | # |
| **Groundnut oil** | **Y** |
| Hazelnut oil | # |
| Heartcut distillate | I |
| *Heptadecane, see* n-Alkanes (C10+) | |
| Heptane (all isomers) | X |
| *Heptanoic acid, see n*-Heptanoic acid | |
| ***n*-Heptanoic acid** | **Z** |
| Heptanol (all isomers) | Y |
| Heptene (all isomers) | Y |
| Heptyl acetate | Y |
| *Herbicide (C15H22NO2Cl), see* N-(2-Methoxy-1-methyl ethyl)-2-ethyl-6-methylchloroacetanilide | |
| *Hexadecanol, see* Alcohol (C 13+) | |
| 1-Hexadecylnaphthalene/1,4-Bis(hexadecyl)naphthalene mixture | Y |
| *Hexaethylene glycol, see* Polyethylene glycol | |
| Hexamethylene glycol | Z |
| Hexamethylenetetramine solutions | Z |
| Hexane (all isomers) | Y |
| **1,6-Hexanediol, distillation overheads** | **Y** |
| Hexanoic acid | Y |
| Hexanol | Y |
| Hexene (all isomers) | Y |
| Hexyl acetate | Y |
| Hexylene glycol | Z |
| **Hydrogenated starch hydrolysate** | **OS** |
| 2-Hydroxy-4-(methylthio) butanoic acid | Z |
| *Hydroxy terminated polybutadiene, see* Polybutadiene, hydroxy terminated | |
| **Illipe oil** | **Y** |
| **Isoamyl alcohol** | **Z** |
| **Isobutyl alcohol** | **Z** |
| **Isobutyl formate** | **Z** |
| **Isobutyl methacrylate** | **Z** |
| **Isopropyl acetate** | **Z** |
| **Isopropyl alcohol** | **Z** |
| **Isopropylcyclohexane** | **Y** |
| **Jatropha oil** | **Y** |
| Jet fuels: | |
| † JP–4 | I |
| JP–5 (*kerosene, heavy*) | I |
| JP–8 | I |
| Kerosene | I |

| Cargo name | IMO Annex II Pollution Category |
|---|---|
| Lactic acid | Z |
| Lanolin oil | # |
| Lard acid oil | # |
| **Latex: Carboxylated styrene-Butadiene copolymer; Styrene-Butadiene rubber** | **Z** |
| **Lauric acid** | **X** |
| Lecithin | OS |
| Long-chain alkaryl polyether (C11–C20) | Y |
| Long-chain alkaryl sulfonic acid (C16–C60) | Y |
| Long-chain alkylphenate/Phenol sulfide mixture | Y |
| Lubricating oil | I |
| **L-Lysine solution (60% or less)** | **Z** |
| Magnesium long-chain alkaryl sulfonate (C11–C50) | Y |
| Magnesium long-chain alkyl phenate sulfide (C8–C20) | # |
| Magnesium long-chain alkyl salicylate (C11+) | Y |
| *Magnesium nonyl phenol sulfide, see* Magnesium long-chain alkyl phenate sulfide (C8–C20) | |
| Maleic anhydride/sodium allylsulphonate copolymer solution | Z |
| **Mango kernel oil** | **Y** |
| 2-Mercaptobenzothiazol (*in liquid mixtures*) | # |
| Methane | LFG |
| 3-Methoxy-1-butanol | Z |
| 3-Methoxybutyl acetate | Y |
| 1-Methoxy-2-propyl acetate | # |
| **N-(2-Methoxy-1-methyl ethyl)-2-ethyl-6-methylchloroacetanilide** | **X** |
| *Methoxy triglycol , see* Poly (2–8) alkylene glycol monoalkyl (C1–C6) ether | |
| Methyl acetate | Z |
| Methyl acetoacetate | Z |
| Methyl alcohol | Y |
| Methylamyl acetate | Y |
| Methylamyl alcohol | Z |
| Methyl amyl ketone | Z |
| *Methyl butanol, see the amyl alcohols* | |
| Methylbutenol | Y |
| Methyl tert-butyl ether | Z |
| Methyl butyl ketone | Y |
| **Methylbutynol** | **Z** |
| Methyl butyrate | Y |
| **Methylcyclohexane** | **Y** |
| **Methylcyclopentadiene dimer** | **Y** |
| **Methyl 3-(3,5 di-tert-butyl-4-hydroxyphenyl) propionate crude melt** | **[Y]** |
| Methyl ethyl ketone | Z |
| Methyl formate | Z |
| N-Methylglucamine solution (70% or less) | Z |
| 2-Methylglutaronitrile with 2-Ethylsuccinonitrile (12% or less) | Z |
| Methyl heptyl ketone | # |
| 2-Methyl-2-hydroxy-3-butyne | Z |
| *Methyl isobutyl carbinol, see* Methyl amyl alcohol | |
| Methyl isobutyl ketone | Z |
| 3-Methyl-3-methoxybutanol | Z |
| 3-Methyl-3-methoxybutyl acetate | # |
| *Methyl pentene, see* Hexene (all isomers) | |
| *Methyl tert-pentyl ether, see* tert-Amyl methyl ether | |
| 2-Methyl-1,3-propanediol | Z |
| Methyl propyl ketone | Z |
| 2-Methylpyridine | Z |
| 3-Methylpyridine | Z |
| 4-Methylpyridine | Z |
| N-Methyl-2-pyrrolidone | Y |
| **Methyl salicylate** | **Y** |
| *Metolachlor, see* N-(2-Methoxy-1-methylethyl)-2-ethyl-6-methylchloroacetanilide | |
| Mineral oil | I |
| Mineral seal oil | I |
| Mineral spirits | I |
| Mixed acid oil | # |
| Mixed general acid oil | # |
| Mixed hard acid oil | # |
| Mixed soft acid oil | # |
| Motor oil | I |
| *MTBE, see* Methyl tert-butyl ether | |
| Myrcene | X |
| Naphtha: | |
| † Aromatic (*having less than 10% Benzene*) | I |

| Cargo name | IMO Annex II Pollution Category |
|---|---|
| Heavy | I |
| Paraffinic | I |
| † Petroleum | I |
| † Solvent | I |
| Stoddard Solvent | I |
| † Varnish makers' and painters' (75%) | I |
| Naphthenic acid | # |
| Neatsfoot oil | # |
| **Neodecanoic acid** | **Y** |
| **Nitrilotriacetic acid, trisodium salt solution** | **Y** |
| **Nitroethane** | **Y** |
| **Nitroethane(80%)/Nitropropane(20%)** | **Y** |
| **Nitroethane, 1-Nitropropane (each 15% or more) mixture** | **Y** |
| Nitropropane (60%)/Nitroethane (40%) mixture | Y |
| Nonane (all isomers) | X |
| Nonanoic acid (all isomers) | Y |
| Nonanoic, Tridecanoic acid mixture | # |
| Nonene (all isomers) | Y |
| Nonyl acetate | # |
| Nonyl alcohol (all isomers) | Y |
| Nonyl methacrylate monomer | Y |
| Nonylphenol | X |
| Nonylphenol poly(4+)ethoxylate | Y |
| *Nonyl phenol sulfide (90% or less), see* Alkyl (C8–C40) phenol sulfide | |
| Noxious liquid, F, (2) n.o.s. (''trade name'' contains ''principle components'') ST 1, Cat X | X |
| Noxious liquid, F, (4) n.o.s. (''trade name'' contains ''principle components'') ST 2, Cat X | X |
| Noxious liquid, F, (6) n.o.s. (''trade name'' contains ''principle components'') ST 2, Cat Y | Y |
| Noxious liquid, F, (8) n.o.s. (''trade name'' contains ''principle components'') ST 3, Cat Y | Y |
| Noxious liquid, F, (10) n.o.s. (''trade name'' contains ''principle components'') ST 3, Cat Z | Z |
| Noxious liquid, (11) n.o.s. (''trade name'' contains ''principle components'') Cat Z (if flammable or combustible) | Z |
| Non noxious liquid, (12) n.o.s. (''trade name'' contains ''principle components'') Cat OS (if flammable or combustible) | OS |
| Nutmeg butter oil | # |
| *Octadecanol, see* Alcohols (C13+) | |
| *Octadecene, see the olefin or alpha-olefin entries* | |
| Octadeceneamide solution | # |
| **Octamethylcyclotetrasiloxane** | **Y** |
| Octane (all isomers) | X |
| Octanoic acid (all isomers) | Y |
| Octanol (all isomers) | Y |
| Octene (all isomers) | Y |
| *Octyl acetate, see* n-Octyl acetate | |
| **n-Octyl acetate** | **Y** |
| *Octyl alcohol (iso-, n-), see* Octanol (all isomers) | |
| Octyl aldehydes | Y |
| Octyl decyl adipate | Y |
| *Octyl phthalate, see* Dioctyl phthalate | |
| Oil, edible: Poppy seed | I |
| Oil, fuel: | |
| No. 1 ( *kerosene* ) | I |
| No. 1–D | I |
| No. 2 | I |
| No. 2–D | I |
| No. 4 | I |
| No. 5 | I |
| No. 6 | I |
| Oiticica oil | # |
| alpha-Olefins (C6–C18) mixtures | X |
| *alpha-Olefins (C13–C18) mixtures, see* alpha-Olefins (C6–C18) | |
| Olefins (C13+, all isomers) | Y |
| Olefin-Alkyl ester copolymer (molecular weight 2000+) | Y |
| Olefin mixtures (C5–C7) | Y |
| Olefin mixtures (C5–C15) | X |
| Olefin Mixture (C7–C9) C8 rich, stabilized | X |
| Oleic acid | Y |
| *Oleyl alcohol, see* Alcohols (C13+) | |
| **Orange juice (concentrated)** | **OS** |
| Palm kernel acid oil, methyl ester | # |
| **Palm kernel olein** | **Y** |
| **Palm kernel stearin** | **Y** |
| **Palm mid-fraction** | **Y** |

| Cargo name | IMO Annex II Pollution Category |
|---|---|
| **Palm kernel fatty acid distillate** | **Y** |
| **Palm oil fatty acid methyl ester** | **Y** |
| **Palm olein** | **Y** |
| **Palm stearin** | **Y** |
| Paraffin wax | Y |
| *n-Paraffins (C10–C20), see* n-Alkanes (C10+) | |
| *Paraldehyde-ammonia reaction product* | Y |
| *Peanut oil, see* Groundnut oil | |
| Peel oil (oranges and lemons) | # |
| Penetrating oil | I |
| *Pentadecanol, see* Alcohols (C13+) | |
| *1,3-Pentadiene* | Y |
| *1,3-Pentadiene (greater than 50%), cyclopentene and isomers, mixtures* | Y |
| *Pentaethylene glycol, see* Polyethylene glycols | |
| Pentane (all isomers) | Y |
| Pentanoic acid | Y |
| Pentene (all isomers) | Y |
| *n*-Pentyl propionate | Y |
| Perilla oil | # |
| Petrolatum | Y |
| 1-Phenyl-1-xylyl ethane | Y |
| Phosphate esters, alkyl (C12–C14) amine | Y |
| Phosphosulfurized bicyclic terpene | # |
| Pilchard oil | # |
| *Pinene, see the alpha- or beta- isomers* | |
| alpha-Pinene | X |
| beta-Pinene | X |
| **Pine oil** | **X** |
| **Piperazine (70% or less)** | **Y** |
| **Polyalkyl(C18–C22) acrylate in xylene** | **Y** |
| **Polyalkylene glycols, polyalkylene glycol monoalkyl ethers mixtures** | **#** |
| Polyalkylalkenaminesuccinimide, molybdenum oxysulfide | Y |
| *Polyalkylene glycol butyl ether, see* Poly(2–8)alkylene glycol monoalkyl(C1–C6) ether | |
| Poly(2–8)alkylene glycol monoalkyl (C1–C6) ether | Z |
| *Including:* | |
| *Diethylene glycol butyl ether* | |
| *Diethylene glycol ethyl ether* | |
| *Diethylene glycol n-hexyl ether* | |
| *Diethylene glycol methyl ether* | |
| *Diethylene glycol n-propyl ether* | |
| *Dipropylene glycol butyl ether* | |
| *Dipropylene glycol methyl ether* | |
| *Polypropylene glycol methyl ether* | |
| *Triethylene glycol butyl ether* | |
| *Triethylene glycol ethyl ether* | |
| *Triethylene glycol methyl ether* | |
| *Tripropylene glycol methyl ether* | |
| Poly(2–8)alkylene glycol monoalkyl (C1–C6) ether acetate | Y |
| *Including:* | |
| *Diethylene glycol butyl ether acetate* | |
| *Diethylene glycol ethyl ether acetate* | |
| *Diethylene glycol methyl ether acetate* | |
| Polyalkylene oxide polyol | # |
| Polyalkyl(C10–C20) methacrylate | Y |
| **Polyalkyl(C10–C18) methacrylate/ethylene-propylene copolymer mixture** | **Y** |
| Polybutadiene, hydroxy terminated | # |
| Polybutene | Y |
| Polybutenyl succinimide | Y |
| **Poly(2+)cyclic aromatics** | **X** |
| *Polydimethylsiloxane, see* Dimethylpolysiloxane | |
| Polyether (molecular weight 1350+) | Y |
| Polyether polyols | # |
| Polyethylene glycol | Z |
| Polyethylene glycol dimethyl ether | Z |
| **Poly(ethylene glycol) methylbutenyl ether (MW≤1000)** | **Z** |
| *Polyethylene glycol monoalkyl ether, see* Poly(2–8)alkylene glycol monoalkyl(C1–C6) ether | |
| Polyglycerine, sodium salt solution (containing less than 3% sodium hydroxide) | Z |
| Polyglycerol | # |
| **Polyisobutenamine in aliphatic (C10–C14) solvent** | **Y** |
| Polyisobutenyl anhydride adduct | Z |

| Cargo name | IMO Annex II Pollution Category |
|---|---|
| Poly(4+)isobutylene ( MW≤224) | X |
| Polyisobutylene (MW≤224) | Y |
| Polymerized esters | # |
| Polyolefin amide alkeneamine (C17+) | Y |
| *Polyolefin amide alkeneamine (C28+), see* Polyolefin amide alkeneamine (C17+) | |
| Polyolefin amide alkeneamine borate (C28–C250) | Y |
| Polyolefin amide alkeneamine/Molybdenum oxysulfide mixture | # |
| Polyolefin amide alkeneamine polyol | Y |
| **Polyolefinamine (C28–C250)** | **Y** |
| **Polyolefinamine in alkyl (C2–C4) benzenes** | **Y** |
| **Polyolefinamine in aromatic solvent** | **Y** |
| **Polyolefin aminoester salts (molecular weight 2000+)** | **Y** |
| Polyolefin anhydride | Y |
| Polyolefin ester (C28–C250) | Y |
| Polyolefin phenolic amine (C28–C250) | Y |
| Polyolefin phosphorosulfide, barium derivative (C28–C250) | Y |
| Poly(20)oxyethylene sorbitan monooleate | Y |
| Poly(5+)propylene | Y |
| *Polysiloxane* | Y |
| *Polypropylene glycol methyl ether, see* Poly(2–8)alkylene glycol monoalkyl(C1–C6) ether | |
| Polysiloxane | Y |
| Poppy oil | # |
| Potassium oleate | Y |
| Potassium salt of polyolefin acid | # |
| Propane | LFG |
| *2-Propene-1-aminium, N,N-dimethyl-N–2-propenyl-, chloride, homopolymer solution* | Y |
| *Propionaldehyde* | Y |
| *n-Propoxypropanol , see* Propylene glycol monoalkyl ether | |
| *n*-Propyl acetate | Y |
| *n*-Propyl alcohol | Y |
| *iso-Propylbenzene, see* Propylbenzene (all isomers) | |
| *n-Propylbenzene, see* Propylbenzene (all isomers) | |
| Propylbenzene (all isomers) | Y |
| [iso-propylcyclohexane] | [C ] |
| Propylene | LFG |
| Propylene-Butylene copolymer | # |
| Propylene carbonate | Z |
| Propylene dimer | # |
| Propylene glycol | Z |
| *Propylene glycol n-butyl ether, see* Propylene glycol monoalkyl ether | |
| *Propylene glycol ethyl ether, see* Propylene glycol monoalkyl ether | |
| *Propylene glycol methyl ether, see* Propylene glycol monoalkyl ether | |
| Propylene glycol methyl ether acetate | Z |
| Propylene glycol monoalkyl ether | Z |
| *Including:* | |
| *n-Propoxypropanol* | |
| *Propylene glycol n-butyl ether* | |
| *Propylene glycol ethyl ether* | |
| *Propylene glycol methyl ether* | |
| *Propylene glycol propyl ether* | |
| Propylene glycol phenyl ether | Z |
| *Propylene glycol propyl ether, see* Propylene glycol monoalkyl ether | |
| Propylene polymer (*in liquid mixtures*) | # |
| Propylene tetramer | X |
| Propylene trimer | Y |
| *Pseudocumene, see* Trimethylbenzenes | |
| Raisin seed oil | # |
| Rapeseed acid oil | # |
| **Rape seed oil fatty acid methyl esters** | **Y** |
| Residual oil | I |
| Road oil | I |
| **Rosin** | **Y** |
| Rosin oil | # |
| *Rum, see* Alcoholic beverages, n.o.s. | |
| Safflower acid oil | # |
| Salad oil | # |
| Seal oil | I |
| Sesame oil | # |
| Soapstock oil | # |
| Sodium acetate, Glycol, Water mixture (containing 1% or less, Sodium hydroxide) (if flammable or combustible) | # |

| Cargo name | IMO Annex II Pollution Category |
|---|---|
| Sodium benzoate | Z |
| Sodium bromide solution (less than 50%) | Y |
| Sodium carboxylate solution | Y |
| Sodium long-chain alkyl salicylate (C13+) | # |
| **Sodium methylate 21–30% in methanol** | **Y** |
| **Sodium thiocyanate solution (56% or less)** | **Y** |
| Soya acid oil | # |
| Soybean oil fatty acid methyl ester | Y |
| Soybean oil (epoxidized) | # |
| Spindle oil | I |
| *Stearic acid, see* Fatty acid (saturated, C13+) | |
| *Stearyl alcohol, see* Alcohols (C13+) | |
| Sulfohydrocarbon (C3–C88) | Y |
| Sulfohydrocarbon, long-chain (C18+) alkylamine | # |
| Sulfolane | Y |
| Sulfurized fat (C14–C20) | Z |
| Sulfurized polyolefinamide alkene(C28–C250) amine | Z |
| *Sunflower oil, see* Sunflower seed acid oil | |
| Sunflower seed acid oil | # |
| Tall oil, crude | Y |
| Tall oil, distilled | Y |
| Tall oil, fatty acid | # |
| Tall oil pitch | Y |
| Tall oil soap, crude | Y |
| Tallow | Y |
| *Tallow alcohol, see* Alcohols (C13+) | |
| Tallow alkyl nitrile | # |
| Tallow fatty acid | Y |
| *TAME, see* tert-Amyl methyl ether | |
| *Tetradecanol, see* Alcohols (C13+) | |
| *Tetradecene, see* alpha-Olefins (C6–C18) mixtures, Olefin mixtures (C5–C15), or Olefins (C13+, all isomers) | |
| *Tetradecylbenzene, see* Alkyl(C9+)benzenes | |
| Tetraethylene glycol | Z |
| **Tetraethyl silicate monomer/oligomer (20% in ethanol)** | **Z** |
| Tetrahydronaphthalene | Y |
| Tetramethylbenzene (all isomers) | X |
| *Tetrapropylbenzene, see* Alkyl(C9+)benzenes | |
| Toluene | Y |
| Transformer oil | I |
| *Triarylphosphate, see* Triisopropylated phenyl phosphates | |
| Tributyl phosphate | Y |
| Tridecane | Y |
| Tridecanoic acid | Y |
| *Tridecanol, see* Alcohols (C13+) | |
| *Tridecene, see* Olefins (C13+, all isomers) | |
| Tridecyl acetate | Y |
| *Tridecylbenzene, see* Alkyl(C9+)benzenes | |
| Triethylbenzene | X |
| Triethylene glycol | Z |
| *Triethylene glycol butyl ether, see* Poly(2–8)alkylene glycol monoalkyl(C1–C6) ether | |
| Triethylene glycol butyl ether mixture | # |
| Triethylene glycol di-(2-ethylbutyrate) | # |
| Triethylene glycol ether mixture | # |
| *Triethylene glycol ethyl ether, see* Poly(2–8)alkylene glycol monoalkyl(C1–C6) ether | |
| *Triethylene glycol methyl ether, see* Poly(2–8)alkylene glycol monoalkyl(C1–C6) ether | |
| Triethyl phosphate | Z |
| Triisooctyl trimellitate | # |
| Triisopropanolamine | Z |
| Triisopropylated phenyl phosphates | X |
| Trimethylamine solution (30% or less) | Z |
| Trimethylbenzene (all isomers) | X |
| 2,2,4-Trimethyl-1,3-pentanediol diisobutyrate | Y |
| **2,2,4-Trimethyl-1,3-pentanediol-1-isobutyrate** | **Y** |
| 2,2,4-Trimethyl-3-pentanol-1-isobutyrate | # |
| *Tripropylene, see* Propylene trimer | |
| Tripropylene glycol | Z |
| *Tripropylene glycol methyl ether, see* Poly(2–8)alkylene glycol monoalkyl(C1–C6) ether | |
| *1,3,5-Trioxane* | Y |
| *Trixylenyl phosphate, see* Trixylyl phosphate | |
| Trixylyl phosphate | X |

| Cargo name | IMO Annex II Pollution Category |
|---|---|
| Tucum oil | # |
| Turbine oil | I |
| Turpentine | X |
| † *Turpentine substitute, see* White spirit (low (15–20%) aromatic) | |
| Undecanoic acid | Y |
| *1-Undecanol, see* Undecyl alcohol | |
| *Undecene, see* 1-Undecene | |
| 1-Undecene | X |
| *1-Undecyl alcohol, see* Undecyl alcohol | |
| Undecyl alcohol | X |
| *Undecylbenzene, see* Alkyl(C9+)benzenes | |
| Vegetable oils, n.o.s. | # |
| **Vegetable protein solution (hydrolyzed) (if flammable or combustible)** | **OS** |
| Vinyltoluene | Y |
| Walnut oil | # |
| Waxes | Y |
| † *White spirit, see* White spirit (low (15–20%) aromatic) | |
| † White spirit, low (15–20%) aromatic | Y |
| *Wine, see* Alcoholic beverages, n.o.s. | |
| Wood lignin with sodium acetate/oxalate | Z |
| Xylenes | Y |
| **Xylenes/Ethylbenzene (10% or more) mixture** | **Y** |
| Zinc alkaryl dithiophosphate (C7–C16) | Y |
| Zinc alkenyl carboxamide | Y |
| Zinc alkyl dithiophosphate (C3–C14) | Y |

**Notes:**

"#" = Noxious liquid substance status is undetermined—see 46 CFR 153.900(c) for shipping on an oceangoing vessel.

"†" = Marine occupational safety and health regulations for benzene, 46 CFR part 197, subpart C, may apply to this cargo.

"[ ]" = Provisional categorization to which the United States is party.

"@" = The noxious liquid substance category has been assigned by the U.S. Coast Guard, in absence of one assigned by the IMO. The category is based on a GESAMP Hazard Profile or by analogy to a closely related product having a noxious liquid substance assigned.

Entries in bold were added from the March 2012 Annex to the 2007 edition of the IBC Code.

"Cat" = Pollution category.

"F" = Flammable (flash point less than or equal to 60 degrees C (140 degrees F).

"I" = An "oil" under MARPOL Annex I.

*Italicized* words are not part of the cargo name but may be used in addition to the cargo name.

"n.o.s." = Not otherwise specified.

"OS" = An "other cargo" considered at present to present no harm to marine resources, human health, amenities, or other legitimate uses of the sea when discharged into the sea from tank cleaning or deballasting operations.

"see" = A redirection to the preferred, alternative cargo name—for example in "*Diethyl ether, see* Ethyl ether," the pollution category for "diethyl ether" will be found under the preferred, alternative cargo name "ethyl ether."

"ST" = Ship type.

"X," "Y," and "Z" = Noxious liquid substance categories under MARPOL Annex II.

## PART 150—COMPATIBILITY OF CARGOES

■ 3. Revise the authority citation for part 150 to read as follows:

**Authority:** 46 U.S.C. 2103, 3306, 3703; Department of Homeland Security Delegation No. 0170.1. Section 150.105 issued under 44 U.S.C. 3507; Department of Homeland Security Delegation No. 0170.1, para. II (92.a), (92.b).

■ 4. Revise Table I to Part 150, as amended by the interim rule published on August 16, 2013 (78 FR 50148), effective January 16, 2017, as delayed at 79 FR 68132, November 14, 2014, to read as follows:

TABLE I TO PART 150—ALPHABETICAL LIST OF CARGOES

| Chemical name | Group No. | Footnote | CHRIS Code | Related CHRIS codes |
|---|---|---|---|---|
| Acetaldehyde | 19 | | AAD | |
| Acetic acid | 4 | 2 | AAC | |
| Acetic anhydride | 11 | 2 | ACA | |
| Acetochlor | 10 | | ACG | |
| Acetone | 18 | 2 | ACT | |
| Acetone cyanohydrin | 0 | 1, 2 | ACY | |
| Acetonitrile | 37 | | ATN | |
| Acetonitrile (low purity grade) | 37 | | AIL | |
| Acetophenone | 18 | | ACP | |
| *Acid oil mixture from soybean, corn (maize) and sunflower oil refining, see* Oil, misc: Acid mixture from soybean, corn (maize) and sunflower oil refining. | 34 | 3 | | AOM |
| Acrolein | 19 | 2 | ARL | |

TABLE I TO PART 150—ALPHABETICAL LIST OF CARGOES—Continued

| Chemical name | Group No. | Footnote | CHRIS Code | Related CHRIS codes |
|---|---|---|---|---|
| Acrylamide solution (50% or less) | 10 | 3 | AAM | AAO |
| Acrylic acid | 4 | 2 | ACR | |
| Acrylic acid/ethenesulfonic acid copolymer with phosphonate groups, sodium salt solution. | 30 | 3 | APG | |
| Acrylonitrile | 15 | 2 | ACN | |
| Acrylonitrile-Styrene copolymer dispersion in Polyether polyol | 20 | | ALE | |
| Adiponitrile | 37 | | ADN | |
| Alachlor technical (90% or more) | 33 | 3 | ALH | ALI |
| Alcohol (C12–C13, branched and linear) poly (4–8) propoxy sulfates, sodium salt 25–30% solution. | 41 | 3 | ABL | |
| Alcohol (C9–C11) poly (2.5–9) ethoxylates | 20 | 3 | AET | ALY/APV/APW |
| Alcohol (C6–C17) (secondary) poly (3–6) ethoxylates | 20 | 3 | AEA | AEB |
| Alcohol (C6–C17) (secondary) poly (7–12) ethoxylates | 20 | 3 | AEB | AEA |
| Alcohol (C12–C16) poly (1–6) ethoxylates | 20 | 3 | AED | AET/ALY/APW |
| Alcohol (C12–C16) poly (7–19) ethoxylates | 20 | 3 | APV | AET/ALY/APV |
| Alcohol (C12–C16) poly (20+) ethoxylates | 20 | 3 | APW | AET/ALY |
| *Alcohol (C12–C15) poly (. . .) ethoxylate, see* Alcohol (C12–C16) poly (. . .) ethoxylates. | 20 | | | |
| Alcohol polyethoxylates | 20 | | | AEA/AEB/AED/AET/APV/APW |
| Alcohol polyethoxylates, secondary | 20 | | | AEA/AEB |
| Alcoholic beverages, n.o.s. | 20 | 3 | ABV | |
| Alcohols (C12+), primary, linear | 20 | 3 | ASY | ALR/AYK/AYL |
| Alcohols (C8–C11), primary, linear and essentially linear | 20 | | ALR | AYK/AYL |
| Alcohols (C12–C13), primary, linear and essentially linear | 20 | 3 | AYK | ALR/ASY/AYL |
| Alcohols (C14–C18), primary, linear and essentially linear | 20 | 3 | AYL | ALR/ASY AYK |
| Alcohols (C13+) | 20 | | ALY | ASY/AYK |
| *Including:* | | | | |
| *Cetyl Alcohol (hexadecanol)* | 20 | | | |
| *Oleyl Alcohol (octadecenol)* | 20 | | | |
| *Pentadecanol* | 20 | | | |
| *Tallow alcohol* | 20 | | | |
| *Tetradecanol* | 20 | | | |
| *Tridecanol* | 20 | | | |
| Alkanes (C10–C26), linear and branched (flash point > 60 °C) | 31 | 3 | ABD. | |
| Alkanes (C6–C9) | 31 | | ALK. | |
| *Including:* | | | | |
| *Heptanes* | 31 | | | |
| *Hexanes* | 31 | | | |
| *Nonanes* | 31 | | | |
| *Octanes* | 31 | | | |
| n-Alkanes (C10+) (all isomers) | 31 | | ALV | ALJ |
| *Including:* | | | | |
| *Decanes* | 31 | | | |
| *Dodecanes* | 31 | | | |
| *Heptadecanes* | 31 | | | |
| *Tridecanes* | 31 | | | |
| *Undecanes* | 31 | | | |
| iso-& cyclo-Alkanes (C10–C11) | 31 | | AKI. | |
| iso-& cyclo-Alkanes (C12+) | 31 | | AKJ. | |
| *Alkane (C14–C17) sulfonic acid, sodium salt solutions, see* Sodium alkyl (C14–C17) sulfonates (60–65% solution). | 34 | | AKA | SAA (AKE/SSU) |
| Alkaryl polyether (C9–C20) | 41 | | AKP. | |
| Alkenoic acid, polyhydroxy ester borated | 0 | 1, 3 | AAY. | |
| Alkenyl (C11+) amide | 10 | | AKM. | |
| Alkenyl (C16–C20) succinic anhydride | 11 | | AAH. | |
| Alkyl acrylate-Vinyl pyridine copolymer in Toluene | 32 | | AAP. | |
| Alkylaryl phosphate mixtures (more than 40% Diphenyl tolyl phosphate, less than 0.02% ortho-isomer). | 34 | | APD. | |
| Alkylated (C4–C9) hindered phenols | 21 | 3 | AYO. | |
| Alkyl (C3–C4) benzenes | 32 | | AKC | |
| *Including:* | | | | |
| *Butylbenzenes* | 32 | | | |
| *Cumene* | 32 | | | |
| *Propylbenzenes* | 32 | | | |
| Alkyl (C5–C8) benzenes | 32 | | AKD. | |
| *Including:* | | | | |
| *Amylbenzenes* | 32 | | | |
| *Heptylbenzenes* | 32 | | | |
| *Hexylbenzenes* | 32 | | | |
| *Octylbenzenes* | 32 | | | |

TABLE I TO PART 150—ALPHABETICAL LIST OF CARGOES—Continued

| Chemical name | Group No. | Footnote | CHRIS Code | Related CHRIS codes |
|---|---|---|---|---|
| Alkyl (C9+) benzenes | 32 | | AKB. | |
| *Including:* | | | | |
| *Decylbenzenes* | 32 | | | |
| *Dodecylbenzenes* | 32 | | | |
| *Nonylbenzenes* | 32 | | | |
| *Tetradecylbenzenes* | 32 | | | |
| *Tetrapropylbenzenes* | 32 | | | |
| *Tridecylbenzenes* | 32 | | | |
| *Undecylbenzenes* | 32 | | | |
| Alkyl (C8+) amine, Alkenyl (C12+) acid ester mixture | 34 | | AAA. | |
| Alkyl amine (C17+) | 7 | | AKY. | |
| Alkyl benzene distillation bottoms | 0 | 1, 3 | ABB. | |
| Alkylbenzene mixtures (containing at least 50% of Toluene) | 32 | 3 | AZT. | |
| Alkylbenzene, Alkylindane, Alkylindene mixture (each C12–C17) | 32 | | AIH. | |
| Alkyl (C11–C17) benzene sulfonic acid | 0 | 1, 2, 3 | ABN | ABS/ABQ |
| Alkylbenzene sulfonic acid (less than 4%) | 0 | 1 | ABQ | ABS/ABN |
| Alkylbenzene sulfonic acid, sodium salt solution | 33 | | ABT. | |
| Alkyl (C12+) dimethylamine | 7 | 3 | ADM. | |
| Alkyl dithiocarbamate (C19–C35) | 34 | 3 | ADB. | |
| Alkyl dithiothiadiazole (C6–C24) | 33 | | ADT. | |
| Alkyl ester copolymer (C4–C20) | 34 | | AES | AEQ |
| Alkyl ester copolymer in mineral oil | 34 | | AEQ | AES |
| Alkyl (C7–C9) nitrates | 34 | 2 | AKN | ONE |
| Alkyl (C7–C11) phenol poly (4–12) ethoxylates | 40 | | APN | NPE |
| Alkyl (C4–C9) phenols | 21 | | AYI | BLT/BTP/NNP/OPH |
| *Alkyl phenol sulfide (C8–C40), see* Alkyl (C8–C40) phenol sulfide | 34 | | | AKS |
| Alkyl (C8–C40) phenol sulfide | 34 | | AKS. | |
| Alkyl (C9–C15) phenyl propoxylate | 40 | | AXL. | |
| Alkyl (C8–C9) phenylamine in aromatic solvents | 9 | | ALP. | |
| *Alkyl phthalates, see* individual phthalates | 34 | | AYS. | |
| *Alkyl polyglucoside solution, see* individual polyglucoside solution | 43 | | AGD | AGL/AGM AGN/AGO AGP |
| Alkyl (C8–C10) polyglucoside solution (65% or less) | 43 | 3 | AGL | AGD/AGM/AGN/AGO/AGP |
| Alkyl (C8–C10)/(C12–C14):(40% or less/60% or more) polyglucoside solution (55% or less). | 43 | 3 | AGN | AGD/AGL AGM/AGO AGP |
| Alkyl (C8–C10)/(C12–C14):(50%/50%) polyglucoside solution (55% or less) | 43 | 3 | AGO | AGD/AGL/AGN/AGP |
| Alkyl (C8–C10)/(C12–C14):(60% or more/40% or less) polyglucoside solution (55% or less). | 43 | 3 | AGP | AGD/AGL/AGM/AGN/AGO |
| Alkyl (C12–C14) polyglucoside solution (55% or less) | 43 | 3 | AGM | AGD/AGL/AGN/AGO/AGP |
| Alkyl (C12–C16) propoxyamine ethoxylates | 8 | 3 | AXE | LPE |
| Alkyl (C10–C20), saturated and unsaturated) phosphite | 34 | | AKL. | |
| Alkyl succinic anhydride | 11 | | AUA. | |
| Alkyl sulfonic acid ester of phenol | 34 | | AKH. | |
| Alkyl toluene | 32 | | AYL | AUS |
| Alkyl (C18+) toluenes | 32 | 3 | AUS | AYL |
| Alkyl (C18–C28) toluenesulfonic acid | 0 | 1, 3 | AUU. | |
| Alkyl (C18–C28) toluenesulfonic acid, Calcium salts, borated | 34 | 3 | AUB. | |
| Alkyl (C18–C28) toluenesulfonic acid, Calcium salts, low overbase | 33 | 3 | AUL. | |
| Alkyl (C18–C28) toluenesulfonic acid, calcium salts, high overbase | 33 | 3 | AUC. | |
| Allyl alcohol | 15 | 2 | ALA. | |
| Allyl chloride | 15 | | ALC. | |
| *Aluminum chloride/Hydrochloric acid solution, see* "Aluminum chloride/Hydrogen chloride solution". | 0 | 1 | AHS | AHG |
| Aluminum chloride/Hydrogen chloride solution | 0 | 1, 3 | AHG | AHS |
| Aluminum hydroxide/sodium hydroxide/sodium carbonate solution (40% or less). | 5 | 3 | AHN. | |
| Aluminum sulfate solution | 43 | 2 | ASX | ALM |
| Amine C–6, morpholine process residue | 9 | | AOI. | |
| Aminoethyldiethanolamine/Aminoethylethanolamine solution | 8 | | ADY. | |
| 2-(2-Aminoethoxy)ethanol | 8 | | AEX. | |
| Aminoethylethanolamine | 8 | | AEE. | |
| N-Aminoethylpiperazine | 7 | | AEP. | |
| 2-Amino-2-hydroxymethyl-1,3-propanediol solution | 43 | | AHL. | |
| 2-Amino-2-methyl-1-propanol | 8 | | APZ | APQ/APR |
| Ammonia, anhydrous | 6 | | AMA. | |
| *Ammonia, aqueous (28% or less Ammonia), see* Ammonium hydroxide | 6 | | | AMH |
| Ammonium bisulfite solution (70% or less) | 43 | 2 | ABX | ASU |
| Ammonium chloride solution (less than 25%) | 43 | 3 | AIS | AMC |
| Ammonium hydrogen phosphate solution | 0 | 1 | AMI. | |
| Ammonium hydroxide (28% or less Ammonia) | 6 | | AMH. | |
| *Ammonium lignosulfonate solution, see* also Lignin liquor | 43 | | ALG | LNL |

TABLE I TO PART 150—ALPHABETICAL LIST OF CARGOES—Continued

| Chemical name | Group No. | Footnote | CHRIS Code | Related CHRIS codes |
|---|---|---|---|---|
| Ammonium nitrate solution (45% or less) | 0 | 1 | AND | AMN/ANR/ANW |
| Ammonium nitrate solution (93% or less) | 0 | 1 | ANW | AMN/AND/ANR |
| *Ammonium nitrate/Urea solution (containing Ammonia), see* Urea/Ammonium nitrate solution (containing 1% or more Ammonia). | 6 | | | UAS (ANU/UAT/UAU/UAV) |
| *Ammonium nitrate/Urea solution (not containing Ammonia), see* Urea/Ammonium nitrate solution (containing less than 1% Ammonia). | 43 | | | UAU (ANU/UAS/UAT/UAV) |
| *Ammonium phosphate/Urea solution, see* Urea/Ammonium phosphate solution. | 43 | | | UAP (APP/URE) |
| Ammonium polyphosphate solution | 43 | | AMO. | |
| Ammonium sulfate solution | 43 | | ASW | AME/AMS |
| Ammonium sulfate solution (20% or less) | 43 | | AME | AMS/ASW |
| Ammonium sulfide solution (45% or less) | 5 | 3 | ASS | ASF |
| Ammonium thiocyanate/Ammonium thiosulfate solution | 0 | 1 | ACV | ACS |
| Ammonium thiosulfate solution (60% or less) | 43 | 3 | ATV | ATF |
| Amyl acetate (all isomers) | 34 | 3 | AEC | IAT/AML/AAS/AYA |
| Amyl acid phosphate | 34 | | AIA | |
| Amyl alcohol, primary | 20 | 3 | APM | AAI/AAL/AAN/IAA |
| n-Amyl alcohol | 20 | 3 | AAN | AAI/AAL/APM/ASE/IAA |
| sec-Amyl alcohol | 20 | 3 | ASE | AAI/AAL/AAN/APM/IAA |
| tert-Amyl alcohol | 20 | 3 | AAL | AAI/APM/ASE/IAA |
| tert-Amyl methyl ether | 41 | | AYE | |
| *Amyl methyl ketone, see* Methyl amyl ketone | 18 | | AMJ | MAK (AMK) |
| *Amylene, see* Pentene (all isomers) | 30 | | AMW | PTX (AMX/AMZ/PTE) |
| *tert-Amylenes, see* Pentene | 30 | | AMZ | PTX (AMW) |
| Aniline | 9 | | ANL. | |
| Animal and Fish oils, n.o.s. | 34 | | AFN. | |
| *Including:* | | | | |
| *Cod liver oil* | 34 | | | |
| *Lanolin* | 34 | | | |
| *Neatsfoot oil* | 34 | | | |
| *Pilchard oil* | 34 | | | |
| *Sperm oil* | 34 | | | |
| Animal and Fish acid oils and distillates, n.o.s. | 34 | | AFA. | |
| *Including:* | | | | |
| *Animal acid oil* | 34 | | | |
| *Fish acid oil* | 34 | | | |
| *Lard acid oil* | 34 | | | |
| *Mixed acid oil* | 34 | | | |
| *Mixed general acid oil* | 34 | | | |
| *Mixed hard acid oil* | 34 | | | |
| *Mixed soft acid oil* | 34 | | | |
| *Anthracene oil (Coal tar fraction), see* Coal tar | 33 | | AHO | COR |
| Apple juice | 43 | | APJ. | |
| Argon, liquefied | 0 | 1 | ARG. | |
| Aryl polyolefin (C11–C50) | 30 | | AYF. | |
| Asphalt | 33 | | ASP | ACU |
| Asphalt blending stocks, roofers flux | 33 | | ARF. | |
| Asphalt blending stocks, straight run residue | 33 | | ASR. | |
| Asphalt emulsion | 33 | | ASQ. | |
| Asphalt, kerosene, and other components | 33 | | AKO. | |
| Aviation alkylates (C8 paraffins and iso-paraffins BPT 95–120 °C) | 33 | 3 | AVA | GAK/GAV |
| Barium long-chain alkaryl (C11–C50) sulfonate | 34 | | BCA. | |
| Barium long-chain alkyl (C8–C14) phenate sulfide | 34 | | BCH. | |
| Behenyl alcohol | 20 | | BHY. | |
| Benzene | 32 | 2 | BNZ | BHA/BHB/PYG |
| Benzene and mixtures having 10% Benzene or more | 32 | | BHB | BHA/BNZ/PYG |
| Benzene hydrocarbon mixtures (containing Acetylenes) (having 10% Benzene or more). | 32 | | BHA | BHB/BNZ/PYG |
| Benzene/Toluene/Xylene mixtures (having 10% Benzene or more) | 32 | | BTX | BHB/BNZ/PYG/TOL/XLX/XLM/XLO/XLP |
| Benzenesulfonyl chloride | 0 | 1, 2 | BSC. | |
| Benzenetricarboxylic acid, trioctyl ester | 34 | | BCE. | |
| Benzyl acetate | 34 | | BZE. | |
| Benzyl alcohol | 21 | | BAL. | |
| Benzyl chloride | 36 | | BCL. | |
| Bio-fuel blends of Diesel/gas oil and Alkanes (C10–C26), linear and branched with a flash point >60°C (>25% but <99% by volume). | 33 | 3 | BIF | BIG/BIH/BII/BIJ/BIK |
| Bio-fuel blends of Diesel/gas oil and Alkanes (C10–C26), linear and branched with a flash point ≤60°C (>25% but < 99% by volume). | 33 | 3 | BIG | BIF/BIH/BII/BIJ/BIK |
| Bio-fuel blends of Diesel/gas oil and FAME (>25% but <99% by volume) | 34 | 3 | BIH | BIF/BIG/BII/BIJ/BIK |
| Bio-fuel blends of Diesel/gas oil and vegetable oil (>25% but <99% by volume). | 34 | 3 | BII | BIF/BIG/BIH/BIJ/BIK |

TABLE I TO PART 150—ALPHABETICAL LIST OF CARGOES—Continued

| Chemical name | Group No. | Footnote | CHRIS Code | Related CHRIS codes |
|---|---|---|---|---|
| Bio-fuel blends of Gasoline and Ethyl alcohol (>25% but <99% by volume) | 20 | 2, 3 | BIJ | BIF/BIG/BIH/BII/BIK |
| Bis (2-ethylhexyl) terephthalate | 34 | | DHH. | |
| Boronated calcium sulfonate | 34 | | BCU. | |
| Brake fluid base mix: Poly(2–8)alkylene (C2–C3) glycols/Polyalkylene (C2–C10) glycols monoalkyl (C1–C4) ethers and their borate esters. | 20 | 3 | BFY. | |
| Brominated Epoxy Resin in Acetone | 16 | | BER. | |
| Bromochloromethane | 36 | | BCM. | |
| Butadiene (all isomers) | 30 | | BDI. | |
| Butadiene/Butylene mixtures (containing Acetylenes) | 30 | | BBM | BBX/BDI/BTN/IBL |
| Butane (all isomers) | 31 | | BMX | IBT/BUT |
| Butane/Propane mixture | 31 | | BUP | LPG |
| *1,4-Butanediol, see* Butylene glycol | 20 | | BDO | BUG |
| *2-Butanone, see* Methyl ethyl ketone | 18 | 2 | | MEK |
| Butene oligomer | 30 | | BOL. | |
| *Butene, see* Butylenes (all isomers) | 30 | | | BUT/IBL |
| 2-Butoxyethanol (58%)/Hyperbranched polyesteramide (42%) (mixture) | 20 | | | |
| Butyl acetate (all isomers) | 34 | 3 | BAX | BCN/BTA/BYA/IBA |
| Butyl acrylate (all isomers) | 14 | 3 | BAR | BAI/BTC |
| Butyl alcohol (all isomers) | 20 | 2, 3 | BAY | BAN/BAS/BAT/IAL |
| *Butyl alcohol (iso-, n-, sec-, tert-), see* Butyl alcohol (all isomers) | 20 | 2 | | BAN/BAS/BAT/BAY/IAL |
| Butylamine (all isomers) | 7 | 3 | BTY | BAM/BTL/BUA/IAM |
| *Butylbenzene (all isomers), see* Alkyl(C3–C4)benzenes | 32 | 3 | BBE | AKC |
| Butyl benzyl phthalate | 34 | | BPH. | |
| Butyl butyrate (all isomers) | 34 | 3 | BBA | BIB/BUB |
| n-Butyl ether | 41 | 3 | BTE. | |
| n-Butyl formate | 34 | | BFN | BFI/BFO |
| Butyl heptyl ketone | 18 | | BHK. | |
| Butyl methacrylate | 14 | | BMH | BMI/BMN |
| *Butyl methacrylate, Decyl methacrylate, Cetyl-Eicosyl methacrylate mixture, see* Butyl/Decyl/Cetyl/Eicosyl methacrylate mixture. | 14 | 3 | | DER (BMH/BMI/BMN/CEM) |
| *Butyl methyl ketone, see* Methyl butyl ketone | 18 | 2 | | MBJ (MBK/MIK) |
| Butyl phenol, Formaldehyde resin in Xylene | 32 | | | |
| n-Butyl propionate | 34 | | BPN. | |
| Butyl stearate | 34 | | BST. | |
| Butyl toluene | 32 | | BUE. | |
| Butyl/Decyl/Cetyl/Eicosyl methacrylate mixture | 14 | 3 | DER | BMH/BMI/BMN/CEM |
| Butylene glycol | 20 | 2 | BUG | BDO |
| 1,2-Butylene oxide | 16 | | BTO. | |
| Butylenes (all isomers) | 30 | | BTN | IBL |
| Butyraldehyde (all isomers) | 19 | 3 | BAE | BAD/BTR |
| Butyric acid | 4 | | BRA | IBR |
| gamma-Butyrolactone | 0 | 1, 2 | BLA | |
| C9 Resinfeed (DSM) | 32 | 2 | CNR. | |
| *Calcium alkaryl sulfonate (C11–C50), see* Calcium long-chain alkaryl sulfonate (C11–C50). | 34 | 3 | CAE | CAY |
| Calcium alkyl (C9) phenol sulfide, polyolefin phosphorosulfide mixture | 34 | | CPX. | |
| Calcium alkyl (C10–C28) salicylate | 34 | 3 | CAJ. | |
| *Calcium alkyl salicylate, see* Calcium long-chain alkyl salicylate (C13+), Calcium long-chain alkyl (C18–C28) salicylate, or Calcium alkyl (C10–C28) salicylate. | 34 | | | CAJ/CAK/CAZ |
| *Calcium bromide solution, see* Drilling brines | | | CBI | DRB |
| *Calcium bromide/Zinc bromide solution, see* Drilling brine (containing Zinc salts). | 43 | | | DZB |
| Calcium carbonate slurry | 34 | | CSR. | |
| Calcium chloride solution | 43 | | CCS | CLC |
| Calcium hydroxide slurry | 5 | | COH | CAH |
| Calcium hypochlorite solution (15% or less) | 5 | 3 | CHU | CHY/CHZ |
| Calcium hypochlorite solution (more than 15%) | 5 | 3 | CHZ | CHU/CHY |
| Calcium lignosulfonate solutions, see also Lignin liquor | 43 | | CLL | LNL |
| Calcium long-chain alkaryl sulfonate (C11–C50) | 34 | | CAY. | |
| *Calcium long-chain alkyl (C8–C40) phenate, see* Calcium long-chain alkyl (C5–C10) phenate or Calcium long-chain alkyl (C11–C40) phenate. | 34 | | CAQ | CAU/CAV (CAN/CAW) |
| Calcium long-chain alkyl (C5–C10) phenate | 34 | 3 | CAU | CAN/CAQ/CAV/CAW |
| Calcium long-chain alkyl (C5–C20) phenate | 34 | | CAV | CAN/CAQ/CAU/CAW |
| Calcium long-chain alkyl (C11–C40) phenate | 34 | 3 | CAW | CAN/CAQ/CAU/CAV |
| Calcium long-chain alkyl phenate sulfide (C8–C40) | 34 | | CPI. | |
| Calcium long-chain alkyl phenolic amine (C8–C40) | 9 | | CPQ. | |
| Calcium long-chain alkyl (C18–C28) salicylate | 34 | 3 | CAJ. | |
| Calcium long-chain alkyl salicylate (C13+) | 34 | | CAK | CAJ/CAZ |
| Calcium nitrate solutions (50% or less) | 34 | 3 | CNU | CNT |
| Calcium nitrate/Magnesium nitrate/Potassium chloride solution | 34 | | CLM. | |

TABLE I TO PART 150—ALPHABETICAL LIST OF CARGOES—Continued

| Chemical name | Group No. | Footnote | CHRIS Code | Related CHRIS codes |
|---|---|---|---|---|
| Calcium salts of fatty acids | 34 | | CFF. | |
| Calcium stearate | 34 | | CSE. | |
| Calcium sulfonate/Calcium carbonate/Hydrocarbon solvent mixture | 33 | | CSH. | |
| *Camelina oil, see* Oil, misc.: Camelina | 34 | 3 | CEL. | |
| Camphor oil (light) | 18 | | CPO. | |
| *Canola oil, see* Oil, edible: Rapeseed, (low erucic acid containing less than 4% free fatty acids). | 34 | | | ORO (ORP) |
| *Caprolactam solution, see* epsilon-Caprolactam (molten or aqueous solutions). | 22 | | CLS. | |
| epsilon-Caprolactam (molten or aqueous solutions) | 22 | 3 | CLU | CLS |
| Caramel solutions | 43 | | CML. | |
| Carbolic oil | 21 | | CBO. | |
| Carbon dioxide (high purity) | 0 | 1 | CDH | CDO/CDQ |
| Carbon dioxide (reclaimed quality) | 0 | 1 | CDQ | CDH/CDO |
| Carbon dioxide, liquefied | 0 | 1 | CDO | CDH/CDQ |
| Carbon disulfide | 38 | | CBB. | |
| Carbon tetrachloride | 36 | 2 | CBT | CBU |
| *Cashew nut shell oil (untreated), see* Oil, misc.: Cashew nut shell (untreated). | 34 | | OCN. | |
| *Castor oil, see* Oil, edible: Castor | 34 | | | OCA (VEO) |
| Catoxid feedstock | 36 | 2 | CXF. | |
| Caustic potash solution | 5 | 2 | CPS. | |
| Caustic soda solution | 5 | 2 | CSS. | |
| Cesium formate solution | 43 | 3 | CSM. | |
| *Cetyl alcohol (hexadecanol), see* Alcohols (C13+) | 20 | | | ALY (ASY/AYL) |
| *Cetyl/Stearyl alcohol, see* Alcohols (C13+) | 20 | | | ALY (ASY/AYL) |
| Cetyl/Eicosyl methacrylate mixture | 14 | | CEM. | |
| Chlorinated paraffins (C10–C13) | 36 | | CLH | CLG/CLJ/CLQ |
| Chlorinated paraffins (C14–C17) (with 50% Chlorine or more, and less than 1% C13 or shorter chains). | 36 | 3 | CLJ | CLG/CLH/CLQ |
| Chlorinated paraffins (C14–C17) (with 52% Chlorine) | 36 | | CLQ | CLG/CLH/CLJ |
| Chlorinated paraffins (C18+) with any level of chlorine | 36 | | CLG | CLH/CLJ |
| Chlorine | 0 | 1 | CLX. | |
| Chloroacetic acid (80% or less) | 4 | 3 | CHM | CHL/MCA |
| Chlorobenzene | 36 | 2 | CRB. | |
| *Chlorodifluoromethane, see* monochlorodifluoromethane | 36 | | MCF. | |
| 2-Chloro-4-ethylamino-6-isopropylamino-5-triazine solution | 0 | 1 | CET. | |
| 1-(4-Chlorophenyl)-4,4-dimethyl pentan-3-one | 18 | 2 | CDP. | |
| 2-or 3-Chloropropionic acid | 4 | | CPM | CLA/CLP |
| Chloroform | 36 | | CRF. | |
| Chlorohydrins (crude) | 17 | 3 | CHD. | |
| 4-Chloro-2-methylphenoxyacetic acid, Dimethylamine salt solution | 9 | | CDM. | |
| o-Chloronitrobenzene | 42 | | CNO | CNP |
| Chlorosulfonic acid | 0 | 1 | CSA. | |
| m-Chlorotoluene | 36 | 3 | CTM | CHI/CRN/CTO |
| o-Chlorotoluene | 36 | 3 | CTO | CHI/CRN/CTM |
| p-Chlorotoluene | 36 | 3 | CRN | CHI/CTM/CTO |
| Chlorotoluenes (mixed isomers) | 36 | 3 | CHI | CRN/CTM/CTO |
| Choline chloride solutions | 20 | | CCO | |
| Citric acid (70% or less) | 4 | 3 | CIS | CIT |
| Clay slurry | 43 | | CLY. | |
| Coal slurry | 43 | | COG | COA |
| Coal tar | 33 | | COR | OCT |
| Coal tar crude bases | 33 | | CTB. | |
| *Coal tar distillate, see* Naphtha: Coal tar solvent | 33 | | CDL | NCT (CTU) |
| *Coal tar naphtha solvent, see* Naphtha: Coal tar solvent | 33 | | | NCT (CDL/CTU) |
| Coal tar pitch (molten) | 33 | 3 | CTP. | |
| Coal tar, high temperature | 33 | | CHH. | |
| Cobalt naphthenate in solvent naphtha | 34 | | CNS. | |
| *Cocoa butter, see* Oil, edible: Cocoa butter | 34 | | | OCB (VEO) |
| *Coconut oil, see* Oil, edible: Coconut | 34 | 2 | | OCC (VEO) |
| *Coconut oil, fatty acid, see* Oil, misc: Coconut fatty acid | 34 | 2 | | CFA |
| *Coconut oil, fatty acid methyl ester, see* Oil, misc: Coconut fatty acid methyl ester. | 34 | 3 | | OCM |
| Copper salt of long-chain (C17+) alkanoic acid | 34 | | CUS | CFT |
| Copper salt of long-chain (C3–C16) fatty acid | 34 | | CFT | CUS |
| *Corn oil, see* Oil, edible: Corn | 34 | | | OCO (VEO) |
| Corn syrup | 43 | | CSY. | |
| *Cotton seed oil, see* Oil, edible: Cotton seed | 34 | | | OCS (VEO) |
| *Cotton seed oil, fatty acid, see* Oil, misc.: Cotton seed oil, fatty acid | 34 | | CFY. | |
| Creosote | 21 | 2 | CCW | CCT/CWD |

TABLE I TO PART 150—ALPHABETICAL LIST OF CARGOES—Continued

| Chemical name | Group No. | Footnote | CHRIS Code | Related CHRIS codes |
|---|---|---|---|---|
| Creosote (coal tar) | 21 | 2, 3 | CCT | CCW |
| Creosote (wood tar) | 21 | 2, 3 | CWD | CCT/CCW |
| Cresols (all isomers) | 21 | 3 | CRS | CFO/CFP/CRL/CRO/CSC/CSO |
| *Cresols with 5% or more Phenol, see* Phenol | 21 | | CFP | PHN (CFO/CRL/CRO/CRS/CSO) |
| *Cresols with less than 5% Phenol, see* Cresols (all isomers) | 21 | | CFO | CRS (CFP/CRL/CRO/CSO) |
| *Cresylate spent caustic, see* Cresylic acid, sodium salt solution | 5 | 2 | CSC | CYD |
| Cresylic acid | 21 | | CRY. | |
| Cresylic acid, dephenolized | 21 | | CAD | CRY/CYN |
| Cresylic acid tar | 21 | | CRX. | |
| Cresylic acid with 5% or more phenol | 21 | | CYN | CAD/CRY |
| Cresylic acid, sodium salt solution | 5 | 2 | CYD | CSC |
| Crotonaldehyde | 19 | 2 | CTA. | |
| *Crude isononylaldehyde, see* Isononyldehyde (crude) | 19 | | | INC |
| *Crude isopropanol, see* Isoproyl alcohol, crude | 20 | | | IPB (IPA/PAL) |
| *Crude piperazine, see* Piperazine, crude | 7 | | | PZC (PPZ/PIZ) |
| *Cumene, see* Propylbenzene (all isomers) | 32 | | CUM | AKD (PBY/PBZ) |
| 1,5,9-Cyclododecatriene | 30 | | CYT. | |
| Cycloheptane | 31 | | CYE. | |
| Cyclohexane | | | CHX. | |
| Cyclohexanol | 20 | | CHN. | |
| Cyclohexanone | 18 | 2 | CCH. | |
| Cyclohexanone/Cyclohexanol mixtures | 18 | 2 | CYX. | |
| Cyclohexyl acetate | 34 | | CYC. | |
| Cyclohexylamine | 7 | | CHA. | |
| Cyclopentadiene/Styrene/Benzene mixture | 30 | | CSB. | |
| 1,3-Cyclopentadiene dimer (molten) | 30 | 3 | CPD | DPT/DPV |
| Cyclopentane | 31 | | CYP. | |
| Cyclopentene | 30 | | CPE. | |
| p-Cymene | 32 | | CMP. | |
| Decahydronaphthalene | 33 | | DHN. | |
| Decaldehyde | 19 | | DAY | IDA/DAL |
| *Decane (all isomers), see* n-Alkanes (C10+) (all isomers) | 31 | | DCC | ALV (ALJ) |
| Decanoic acid | 4 | | DCO | NEA |
| Decene | 30 | | DCE. | |
| Decyl acetate | 34 | | DYA. | |
| Decyl acrylate | 14 | | DAT | IAI/DAR |
| Decyl alcohol (all isomers) | 20 | 2, 3 | DAX | ISA/DAN |
| Decyl/Dodecyl/Tetradecyl alcohol mixture | 20 | 3 | DYO | DAN/DAX/DDN/ISA |
| *Decylbenzene, see* Alkyl (C9+) benzenes | 32 | | DBZ | AKB |
| Decyloxytetrahydrothiophene dioxide | 0 | 1 | DHT. | |
| Detergent alkylate | 32 | | DKY | AKB/DBZ/DDB/TDB/TRB/UDB |
| *Dextrose solution, see* Glucose solution | 43 | | DTS | GLU |
| Diacetone alcohol | 20 | 2 | DAA. | |
| *Dialkyl (C9–C10) phthalates, see* Dialkyl (C7–C13) phthalates | 34 | | DLK | DLH (DAP/DHL/DHP/DID/DIE/DIF/DIN/DIO/DIT/DOP/DPA/DTP/DUP) |
| Dialkyl thiophosphates sodium salts solution | 34 | 3 | DYH. | |
| *Dialkyl (C10–C14) benzenes, see* Alkyl (C9+) benzenes | 32 | | DAB | AKB |
| Dialkyl (C8–C9) diphenylamines | 9 | | DAQ. | |
| Dialkyl (C7–C13) phthalates | 34 | | DAH. | |
| *Including:* | | | | |
| *Di-(2-ethylhexyl) phthalate* | 34 | | | |
| *Diheptyl phthalate* | 34 | | | |
| *Dihexyl phthalate* | 34 | | | |
| *Diisooctyl phthalate* | 34 | | | |
| *Dioctyl phthalate* | 34 | | | |
| *Diisodecyl phthalate* | 34 | | | |
| *Diisononyl phthalate* | 34 | 2 | | |
| *Dinonyl phthalate* | 34 | | | |
| *Ditridecyl phthalate* | 34 | | | |
| *Diundecyl phthalate* | 34 | | | |
| Dibromomethane | 36 | | DBH. | |
| *Dibutyl carbinol, see* Nonyl alcohol (all isomers) | 20 | | | NNS (DBC/NNI/NNN) |
| Dibutyl hydrogen phosphonate | 34 | | DHD. | |
| Dibutyl phthalate | 34 | | DPA | DIT |
| Dibutyl terephthalate | 34 | 3 | DYE. | |
| Dibutylamine | 7 | | DBA. | |

TABLE I TO PART 150—ALPHABETICAL LIST OF CARGOES—Continued

| Chemical name | Group No. | Footnote | CHRIS Code | Related CHRIS codes |
|---|---|---|---|---|
| Dibutylphenols | 21 | | DBT | DBF/DBV/DBW |
| Di-tert-butylphenol | 21 | | DBF | DBT/DBV/DBW |
| 2,4-Di-tert-butylphenol | 21 | | DBV | DBF/DBT/DBW |
| 2,6-Di-tert-butylphenol | 21 | 3 | DBW | DBF/DBT/DBV |
| Dichlorobenzene (all isomers) | 36 | 3 | DBX | DBM/DBO/DBP |
| 3,4-Dichloro-1-butene | 36 | | DCD | DCB |
| Dichlorodifluoromethane | 36 | | DCF. | |
| 1,1-Dichloroethane | 36 | | DCH. | |
| Dichloroethyl ether | 41 | 3 | DYR | DEE |
| 1,6-Dichlorohexane | 36 | | DHX. | |
| 2,2′-Dichloroisopropyl ether | 41 | | DCI. | |
| Dichloromethane | 36 | 2 | DCM. | |
| 2,4-Dichlorophenol | 21 | | DCP. | |
| 2,4-Dichlorophenoxyacetic acid, Diethanolamine salt solution | 43 | | DDE. | |
| 2,4-Dichlorophenoxyacetic acid, Dimethylamine salt solution (70% or less) | 0 | 1, 2, 3 | DDA | DAD/DSX |
| 2,4-Dichlorophenoxyacetic acid, Triisopropanolamine salt solution | 43 | 2 | DTI. | |
| Dichloropropane | 36 | | DPX. | |
| 1,1-Dichloropropane | 36 | | DPB | DPC/DPL/DPP/DPX |
| 1,2-Dichloropropane | 36 | 2, 3 | DPP | DPB/DPC/DPL/DPX |
| 1,3-Dichloropropane | 36 | | DPC | DPB/DPL/DPP/DPX |
| Dichloropropene (all isomers) | 15 | | DCW | DPF/DPU |
| 1,3-Dichloropropene | 15 | | | DCW/DPF |
| Dichloropropene/Dichloropropane mixtures | 15 | | DMX | DCW/DPB/DPC/DPL/DPP/DPU/DPX |
| 2,2-Dichloropropionic acid | 4 | | DCN. | |
| Dicyclopentadiene, Resin Grade, 81–89% | 30 | 3 | DPV | CPD/DPT |
| *Dicyclopentadiene, see* 1,3-Cyclopentadiene dimer (molten) | 30 | | DPT | CPD (DPV) |
| Diethanolamine | 8 | 2 | DEA. | |
| *Diethanolamine salt of 2,4-Dichlorophenoxyacetic acid solution, see* 2,4-Dichlorophenoxyacetic acid, Diethanolamine salt solution. | 43 | | DZZ | DDE |
| Diethylamine | 7 | | DEN. | |
| Diethylaminoethanol | 8 | | DAE. | |
| 2,6-Diethylaniline | 9 | | DMN | DIY |
| Diethylbenzene | 32 | | DEB. | |
| Diethyl ether | 41 | | EET. | |
| *Diethyl hexanol, see* Decyl alcohol (all isomers) | 20 | | | DAX |
| Di-(2-ethylhexyl) adipate | 34 | | DEH. | |
| Di-(2-ethylhexyl) phosphoric acid | 1 | | DEP. | |
| *Di-(2-ethylhexyl) phthalate, see* Dialkyl (C7–C13) phthalate | 34 | | DIE | DAH |
| Di-(2-ethylhexyl) terephthalate | 34 | | DHH. | |
| Diethylene glycol | 40 | 2 | DEG. | |
| *Diethylene glycol butyl ether, see* Poly(2–8)alkylene glycol monoalkyl(C1–C6) ether. | 40 | | DME | PAG |
| *Diethylene glycol butyl ether acetate, see* Poly(2–8)alkylene glycol monoalkyl(C1–C6) ether acetate. | 34 | | DEM | PAF |
| Diethylene glycol dibenzoate | 34 | | DGZ. | |
| Diethylene glycol dibutyl ether | 40 | | DIG. | |
| Diethylene glycol diethyl ether | 40 | | DGS. | |
| *Diethylene glycol ethyl ether, see* Poly(2–8)alkylene glycol monoalkyl (C1–C6) ether. | 40 | | DGE | PAG |
| *Diethylene glycol ethyl ether acetate, see* Poly(2–8)alkylene glycol monoalkyl(C1–C6) ether acetates. | 34 | | DGA | PAF |
| *Diethylene glycol methyl ether, see* Poly(2–8)alkylene glycol monoalkyl(C1–C6) ether. | 40 | | DGM | PAG |
| *Diethylene glycol methyl ether acetate, see* Poly(2–8)alkylene glycol monoalkyl(C1–C6) ether acetate. | 34 | | DGR | PAF |
| *Diethylene glycol n-hexyl ether, see* Poly(2–8)alkylene glycol monoalkyl(C1–C6) ether. | 40 | | DHE | PAG |
| Diethylene glycol phenyl ether | 40 | | DGP. | |
| Diethylene glycol phthalate | 34 | | DGL. | |
| *Diethylene glycol propyl ether, see* Poly(2–8)alkylene glycol monoalkyl(C1–C6) ether. | 40 | | DGO | PAG |
| Diethylenetriamine | 7 | 2 | DET. | |
| Diethylenetriamine pentaacetic acid, pentasodium salt solution | 43 | | DYS. | |
| *Diethylethanolamine, see* Diethylaminoethanol | 8 | | | DAE |
| Diethyl phthalate | 34 | | DPH. | |
| Diethyl sulfate | | | DSU. | |
| Diglycidyl ether of Bisphenol A | 16 | | BDE. | |
| Diglycidyl ether of Bisphenol F | 16 | | DGF. | |
| *Diheptyl phthalate, see* Dialkyl (C7–C13) phthalate | 34 | | DHP | DAH |
| Di-n-hexyl adipate | 34 | | DHA. | |

TABLE I TO PART 150—ALPHABETICAL LIST OF CARGOES—Continued

| Chemical name | Group No. | Footnote | CHRIS Code | Related CHRIS codes |
|---|---|---|---|---|
| *Dihexyl phthalate, see* Dialkyl (C7–C13) phthalate | 34 | | DHL. | |
| *Diisobutyl carbinol, see* Nonyl alcohol (all isomers) | 20 | | DBC | NNS |
| Diisobutyl ketone | 18 | | DIK. | |
| Diisobutyl phthalate | 34 | | DIT | DPA |
| Diisobutylamine | 7 | | DBU. | |
| Diisobutylene | 30 | | DBL. | |
| *Diisodecyl phthalate, see* Dialkyl (C7–C13) phthalates | 34 | | DID | DAH |
| Diisononyl adipate | 34 | | DNY. | |
| *Diisononyl phthalate, see* Dialkyl (C7–C13) phthalates | 34 | 2 | DIN | DAH |
| *Diisooctyl phthalate, see* Dialkyl (C7–C13) phthalate | 34 | | DIO | DAH/(DIE/DOP) |
| Diisopropanolamine | 8 | | DIP. | |
| Diisopropylnaphthalene | 32 | | DII. | |
| Diisopropylamine | 7 | | DIA | DNA |
| Diisopropylbenzene (all isomers) | 32 | | DIX. | |
| 1,4-Dihydro-9,10-dihydroxy anthracene, disodium salt solution | 5 | | DDH. | |
| N,N-Dimethylacetamide | 10 | | DAC | DLS |
| N,N-Dimethylacetamide solution (40% or less) | 10 | 3 | DLS | DAL |
| Dimethyl adipate | 34 | | DLA. | |
| Dimethylamine | 7 | | DMA | DMC/DMG/DMY |
| *Dimethylamine salt of 2,4-Dichlorophenoxyacetic acid solution, see* 2,4-Dichlorophenoxyacetic acid, Dimethylamine salt solution (70% or less). | 0 | 1 | DAD | DDA (DSX) |
| *Dimethylamine salt of 4-Chloro-2-methylphenoxyacetic acid solution, see* 4-Chloro-2-methylphenoxyacetic acid, Dimethylamine salt solution. | 9 | | | CDM |
| Dimethylamine solution (45% or less) | 7 | 3 | DMG | DMA/DMC/DMY |
| Dimethylamine solution (greater than 45% but not greater than 55%) | 7 | 3 | DMY | DMA/DMC/DMG |
| Dimethylamine solution (greater than 55% but not greater than 65%) | 7 | 3 | DMC | DMA/DMG/DMY |
| 2,6-Dimethylaniline | 9 | | DMM | DDL |
| *Dimethylbenzene, see* Xylenes | 32 | 2 | | XLX/XLM/XLO/XLP |
| Dimethylcyclicsiloxane hydrolyzate | 34 | | DXZ. | |
| N,N-Dimethylcyclohexylamine | 7 | | DXN. | |
| Dimethyl disulfide | 0 | 1, 2, 3 | DSK. | |
| *Dimethyldodecylamine, see* N,N-Dimethyldodecylamine | 7 | | | DDY |
| N,N-Dimethyldodecylamine | 7 | | DDY. | |
| Dimethylethanolamine | 8 | | DMB. | |
| Dimethyl ether | 41 | | DIM. | |
| Dimethylformamide | 10 | 2 | DMF. | |
| Dimethyl furan | 41 | | DFU. | |
| Dimethyl glutarate | 34 | | DGT. | |
| Dimethyl hydrogen phosphite | 34 | 2 | DPI. | |
| Dimethyl naphthalene sulfonic acid, sodium salt solution | 34 | 2 | DNS. | |
| Dimethyl octanoic acid | 4 | | DMO. | |
| Dimethyl phthalate | 34 | | DTL. | |
| *Dimethylpolysiloxane, see* Polydimethylsiloxane | 34 | | DMP. | |
| 2,2-Dimethylpropane-1,3-diol (molten or solution) | 20 | 3 | DDI. | |
| Dimethyl succinate | 34 | | DSE. | |
| Dinitrotoluene (molten) | 42 | 3 | DNM | DNL/DNU/DTT |
| *Dinonyl phthalate, see* Dialkyl (C7–C13) phthalates | 34 | | DIF | DAH |
| *Dioctyl phthalate, see* Dialkyl (C7–C13) phthalates | 34 | | DOP | DAH (DIE/DIO) |
| 1,4-Dioxane | 41 | | DOX. | |
| Dipentene | 30 | | DPN. | |
| Diphenyl | | | DIL. | |
| Diphenylamine (molten) | 9 | | DAG | DAM |
| Diphenylamine, reaction product with 2,2,4-trimethylpentene | 9 | | DAK. | |
| Diphenylamines, alkylated | | | DAJ. | |
| Diphenyl/Diphenyl ether mixture | 33 | | DDO. | |
| Diphenyl ether | 41 | | DPE. | |
| *Diphenyl ether/Biphenyl ether mixture, see* Diphenyl/Diphenyl ether mixture | 41 | | | DDO |
| Diphenyl ether/Diphenyl phenyl ether mixture | 41 | | DOB. | |
| Diphenylmethane diisocyanate | 12 | 2 | DPM. | |
| *Diphenyl oxide, see* Diphenyl ether | 41 | | | DPE |
| Diphenylol propane-Epichlorohydrin resins | 0 | 1 | DPR. | |
| Di-n-propylamine | 7 | | DNA | DIA |
| Dipropylene glycol | 40 | | DPG. | |
| *Dipropylene glycol butyl ether, see* Poly(2–8)alkylene glycol monoalkyl(C1–C6) ether. | 40 | | DBG | PAG |
| Dipropylene glycol dibenzoate | 34 | | DGY. | |
| *Dipropylene glycol methyl ether, see* Poly(2–8)alkylene glycol monoalkyl(C1–C6) ether. | 40 | | DPY | PAG |
| Distillates, flashed feed stocks | 33 | | DFF. | |
| Distillates, straight run | 33 | | DSR. | |
| Dithiocarbamate ester (C7–C35) | 34 | | DHO. | |

TABLE I TO PART 150—ALPHABETICAL LIST OF CARGOES—Continued

| Chemical name | Group No. | Footnote | CHRIS Code | Related CHRIS codes |
|---|---|---|---|---|
| Ditridecyl adipate | 34 | | DTY. | |
| *Ditridecyl phthalate, see* Dialkyl (C7–C13) phthalates | 34 | | DTP | DAH |
| *Diundecyl phthalate, see* Dialkyl (C7–C13) phthalates | 34 | | DUP | DAH |
| *Dodecane (all isomers), see* Alkanes (C10+) (all isomers) | 31 | | DOF | ALV (ALJ/DOC) |
| tert-Dodecanethiol | 0 | 1, 2 | DDL | LRM |
| Dodecene (all isomers) | 30 | 3 | DOZ | DDC/DOD |
| *Dodecanol (all isomers), see* Dodecyl Alcohol (all isomers) | 20 | 2 | DDN | LAL |
| 2-Dodecenylsuccinic acid, dipotassium salt solution | 34 | | DSP. | |
| Dodecyl alcohol (all isomers) | 20 | 2 | DDN | ASK/ASY/LAL |
| Dodecylamine/Tetradecylamine mixture | 7 | 2 | DTA. | |
| *Dodecylbenzene, see* Alkyl (C9+) benzenes | 32 | | DDB | AKB |
| Dodecyldimethylamine/Tetradecyldimethylamine mixture | 7 | | DOT. | |
| Dodecyl diphenyl ether disulfonate solution | 43 | | DTA. | |
| Dodecyl hydroxypropyl sulfide | 0 | 1 | DOH. | |
| Dodecyl methacrylate | 14 | | DDM. | |
| Dodecyl/Octadecyl methacrylate mixture | 14 | | DOM | DDM |
| Dodecyl/Pentadecyl methacrylate mixture | 14 | | DDP. | |
| Dodecyl phenol | 21 | | DOL. | |
| Dodecyl xylene | 32 | | DXY. | |
| Dodecylbenzenesulfonic acid | 0 | 1, 2 | DSA. | |
| Drilling brines (containing Calcium, Potassium or Sodium salts) | 43 | | DRL | DRB/DRS |
| Drilling brines (containing Zinc salts) | 43 | | DZB | DRB |
| Drilling brines, including: Calcium bromide solution, Calcium chloride solution and Sodium chloride solution. | 43 | 3 | | DRS/DRL |
| Drilling mud (low toxicity) (if flammable or combustible) | 33 | | DRO | DRM/DRN/DRP |
| Drilling mud (low toxicity) (if non-flammable or non-combustible) | 43 | | DRP | DRM/DRN/DRO |
| Epichlorohydrin | 17 | | EPC. | |
| Epoxy resin | 16 | | EPN. | |
| Ethane | 31 | | ETH. | |
| Ethanolamine | 8 | | MEA. | |
| *2-Ethoxyethanol, see* Ethylene glycol monoalkyl ethers | 40 | | EEO | EGC (EGE) |
| *ETBE, see* Ethyl tert-butyl ether | 41 | | | EBE |
| 2-Ethoxyethyl acetate | 34 | 2 | EEA | EGA |
| Ethoxylated alkyloxy alkyl amine | 8 | | ELM. | |
| *Ethoxylated alcohols , C11–C15, see* alcohol polyethoxylates | 20 | | | AEA/AEB/AED/AET/APV/APW/APX |
| Ethoxylated long-chain (C16+) alkyloxyalkylamine | 8 | | ELA. | |
| Ethoxylated tallow alkyl amine | 7 | | TAY | TAG/TAR |
| Ethoxylated tallow alkyl amine, glycol mixture | 7 | | TAG | TAR/TAY |
| Ethoxylated tallow amine (≤95%) | 7 | 3 | TAR | TAG/TAY |
| *Ethoxy triglycol, see* Poly(2–8)alkylene glycol monoalkyl (C1–C6) ether | 40 | | ETG | PAG (ETR/TGE) |
| Ethoxy triglycol (crude) | 40 | | ETR. | |
| Ethyl acetate | 34 | 2 | ETA. | |
| Ethyl acetoacetate | 34 | | EAA. | |
| Ethyl acrylate | 14 | 2 | EAC. | |
| Ethyl alcohol | 20 | 2 | EAL. | |
| Ethylamine | 7 | 2 | EAM | EAN/EAO |
| Ethylamine solution (72% or less) | 7 | 3 | EAN | EAM/EAO |
| Ethyl amyl ketone | 18 | | EAK | ELK |
| Ethylbenzene | 32 | | ETB. | |
| Ethyl butanol | 20 | | EBT. | |
| N-Ethylbutylamine | 7 | | EBA. | |
| Ethyl tert-butyl ether | 41 | 2 | EBE. | |
| Ethyl butyrate | 34 | | EBR. | |
| Ethyl chloride | 36 | | ECL. | |
| Ethyl cyclohexane | 31 | | ECY. | |
| N-ethylcyclohexylamine | 7 | | ECC. | |
| 2-Ethyl-2-(2,4-dichlorophenoxy) acetate | 34 | | EDY. | |
| 2-Ethyl-2-(2,4-dichlorophenoxy) propionate | 34 | | EDP. | |
| S-Ethyl dipropylthiocarbamate | 34 | 3 | ECB. | |
| Ethylene | 30 | | ETL. | |
| Ethyleneamine EA 1302 | 7 | 2 | EMX. | |
| Ethylene carbonate | 34 | | ECR. | |
| Ethylene chlorohydrin | 20 | | ECH. | |
| Ethylene cyanohydrin | 20 | 2 | ETC. | |
| Ethylenediamine | 7 | 2 | EDA | EMX |
| Ethylenediaminetetraacetic acid/tetrasodium salt solution | 43 | | EDS. | |
| Ethylene dibromide | 36 | | EDB. | |
| Ethylene dichloride | 36 | 2 | EDC. | |
| Ethylene glycol | 20 | 2 | EGL | EAG |
| Ethylene glycol acetate | 34 | | EGO. | |

TABLE I TO PART 150—ALPHABETICAL LIST OF CARGOES—Continued

| Chemical name | Group No. | Footnote | CHRIS Code | Related CHRIS codes |
|---|---|---|---|---|
| Ethylene glycol butyl ether acetate | 34 | | EMA. | |
| Ethylene glycol diacetate | 34 | | EGY. | |
| Ethylene glycol dibutyl ether | 40 | | EGB. | |
| Ethylene glycol ethyl ether acetate | 34 | 2 | EGA | EEA |
| Ethylene glycol methyl ether acetate | 34 | | EGT. | |
| *Ethylene glycol butyl ether, see* Ethylene glycol monoalkyl ethers | 40 | | EGM | EGC |
| *Ethylene glycol tert-butyl ether, see* Ethylene glycol monoalkyl ethers | 40 | | EGG | EGC |
| *Ethylene glycol isobutyl ether, see* Ethylene glycol monoalkyl ethers | 40 | | | EGC (EGG/EGM) |
| *Ethylene glycol methyl butyl ether, see* Ethylene glycol monoalkyl ethers | 40 | | EMB | EGC |
| *Ethylene glycol ethyl ether, see* Ethylene glycol monoalkyl ethers | 40 | | EGE | EGC/EEO |
| *Ethylene glycol hexyl ether, see* Ethylene glycol monoalkyl ethers | 40 | | EGH | EGC |
| *Ethylene glycol methyl ether, see* Ethylene glycol monoalkyl ethers | 40 | | EME | EGC |
| *Ethylene glycol n-propyl ether, see* Ethylene glycol monoalkyl ethers | 40 | | EGN | EGC (EGI/EGP) |
| *Ethylene glycol propyl ether, see* Ethylene glycol monoalkyl ethers | 40 | | EGP | EGC/EGI/EGN |
| *Ethylene glycol isopropyl ether, see* Ethylene glycol monoalkyl ethers | 40 | | EGI | EGC (EGG/EGM) |
| Ethylene glycol monoalkyl ethers | 40 | 2 | EGC. | |
| *Including:* | | | | |
| *Ethylene glycol butyl ether* | 40 | | | |
| *Ethylene glycol ethyl ether* | 40 | | | |
| *Ethylene glycol isobutyl ether* | 40 | | | |
| *Ethylene glycol methyl butyl ether* | 40 | | | |
| *Ethylene glycol tert-butyl ether* | 40 | | | |
| *Ethylene glycol hexyl ether* | 40 | | | |
| *Ethylene glycol methyl ether* | 40 | | | |
| *Ethylene glycol propyl ether* | 40 | | | |
| *Ethylene glycol isopropyl ether* | 40 | | | |
| Ethylene glycol phenyl ether | 40 | | EPE. | |
| Ethylene glycol phenyl ether/Diethylene glycol phenyl ether mixture | 40 | | EDX. | |
| Ethylene oxide | 0 | 1 | EOX. | |
| Ethylene oxide/Propylene oxide mixture | 16 | | EPF | EPM |
| Ethylene oxide/Propylene oxide mixture with an Ethylene oxide content not more than 30% by mass. | 16 | 3 | EPM | EPF |
| Ethylene-Propylene copolymer (in liquid mixtures) | 31 | | EPY. | |
| Ethylene-Vinyl acetate copolymer (emulsion) | 43 | | ECV. | |
| *Ethyl ether, see* Diethyl ether | 41 | | | EET |
| Ethyl-3-ethoxypropionate | 34 | | EEP. | |
| *2-Ethylhexaldehyde, see* Octyl aldehydes | 19 | | EHA | OAL (OLX) |
| *2-Ethylhexanoic acid, see* Octanoic acid (all isomers) | 4 | | EHO | OAY (OAA) |
| *2-Ethylhexanol, see* Octanol | 20 | | EHX | OCA (OTA) |
| 2-Ethylhexyl acrylate | 14 | | EAI. | |
| 2-Ethylhexylamine | 7 | | EHM. | |
| Ethyl hexyl phthalate | 34 | | EHE. | |
| Ethyl hexyl tallate | 34 | | EHT. | |
| 2-Ethyl-2-(hydroxymethyl) propane-1,3-diol (C8–C10) ester | 34 | | EHD. | |
| Ethyl lactate | 34 | | ELT. | |
| Ethylidene norbornene | 30 | 2 | ENB. | |
| Ethyl methacrylate | 14 | | ETM. | |
| N-ethylmethylallylamine | 7 | | EML. | |
| 2-Ethyl-6-methyl-N-(1′-methyl-2-methoxyethyl)aniline | 9 | | EEM. | |
| o-Ethyl phenol | 21 | | EPL. | |
| Ethyl propionate | 34 | | EPR. | |
| 2-Ethyl-3-propylacrolein | 19 | 2 | EPA. | |
| Ethyl toluene | 32 | | ETE. | |
| Fatty acid methyl esters | 34 | 3 | FME. | |
| Fatty acids, (C8–C10) | 34 | 3 | FDS. | |
| Fatty acids, (C12+) | 34 | 3 | FDT | FAB/FAD/FAI/FDI |
| Fatty acids (saturated, C13+) | 34 | | FAB | FAD |
| *Fatty acids (saturated, C14+), see* Fatty acids (saturated C13+) | 34 | | FAD | FAB |
| Fatty acids, (C16+) | 34 | 3 | FDI. | |
| Fatty acids, essentially linear (C6–C18) 2-ethylhexyl ester | 34 | 2, 3 | FAE. | |
| Ferric chloride solution | 1 | | FCS | FCL |
| Ferric hydroxyethylethylenediaminetriacetic acid, trisodium salt solution | 43 | 2 | FHX | STA |
| Ferric nitrate/Nitric acid solution | 3 | 2 | FNN. | |
| *Fish oil, see* Oil, edible: Fish | 34 | 2 | | OFS (AFN) |
| Fish solubles (water based fish meal extracts) | 43 | | FSO. | |
| Fluorosilicic acid (20–30%) in water solution | 1 | 3 | FSK | FSJ/FSL/HFS |
| Fluorosilicic acid (30% or less) | 1 | | FSJ | FSK/FSL/HFS |
| Formaldehyde (50% or more)/Methanol mixtures | 19 | 2 | MTM. | |
| Formaldehyde solutions (37%–50%) | 19 | 2 | FMS | FMG/FMR |
| Formaldehyde solutions (45% or less) | 19 | 2, 3 | FMR | FMG/FMS |
| Formamide | 10 | | FAM. | |

TABLE I TO PART 150—ALPHABETICAL LIST OF CARGOES—Continued

| Chemical name | Group No. | Footnote | CHRIS Code | Related CHRIS codes |
|---|---|---|---|---|
| Formic acid | 4 | 2 | FMA | FMB |
| Formic acid (85% or less) | 4 | 2 | FMB | FMA |
| Formic acid (over 85%) | 4 | 2, 3 | FMD. | |
| Formic acid mixture (containing up to 18% Propionic acid and up to 25% Sodium formate). | 4 | 2, 3 | FMC | FMA/FMB |
| Fructose solution | 43 | | FTS | FRT |
| Fumaric adduct of Rosin, water dispersion | 43 | | FAR. | |
| *Fuming sulfuric acid, see* Oleum | 0 | 2 | | |
| Furfural | 19 | | FFA. | |
| Furfuryl alcohol | 20 | 2 | FAL. | |
| *Gas oil, cracked, see* Oil, misc: Gas, cracked | 33 | | | GOC |
| Gasoline blending stock, alkylates | 33 | | GAK. | |
| Gasoline blending stock, reformates | 33 | | GRF. | |
| Gasolines: | | | | |
| Automotive (not over 4.23 grams lead per gal.) | 33 | | GAT. | |
| Aviation (containing not over 4.86 grams lead per gal.) | 33 | | GAV | AVA |
| Casinghead (natural) | 33 | | GCS. | |
| Polymer | 33 | | GPL. | |
| Straight run | 33 | | GSR. | |
| *Gasolines: Pyrolysis (containing Benzene), see* Pyrolysis gasoline (containing Benzene). | 32 | | GPY | PYG |
| Glucitol/Glycerol blend propoxylated (containing less than 10% amines) | 40 | 3 | GGA. | |
| Glucose solution | 43 | | GLS | DTS |
| Glutaraldehyde solutions (50% or less) | 19 | | GTA. | |
| Glycerine | 20 | 2 | GCR. | |
| Glycerine (83%)/Dioxanedimethanol (17%) mixture | 20 | | GDN | GDM |
| *Glycerol, see* Glycerine | 20 | 2 | | GCR |
| Glycerol ethoxylated | 40 | | GXA. | |
| Glycerol monooleate | 20 | | GMO. | |
| Glycerol polyalkoxylate | 40 | | GPA. | |
| Glycerol propoxylated | 40 | 3 | GXP. | |
| Glycerol, propoxylated and ethoxylated | 40 | 3 | GXE. | |
| Glycerol/Sucrose blend propoxylated and ethoxylated | 40 | 3 | GSB. | |
| Glyceryl triacetate | 34 | | GCT. | |
| Glycidyl ester of C10 trialkyl acetic acid | 34 | | GLU | GLT |
| *Glycidyl ester of tertiary carboxylic acid, see* Glycidyl ester of C10 trialkyl acetic acid. | 34 | | GLT | GLU |
| *Glycidyl ester of tridecyl acetic acid, see* Glycidyl ester of C10 trialkyl acetic acid. | 34 | | GLT | GLU |
| *Glycidyl ester of Versatic acid, see* Glycidyl ester of C10 trialkyl acetic acid | 34 | | GLT | GLU |
| Glycine, sodium salt solution | 7 | | GSS. | |
| *Glycol diacetate, see* Ethylene glycol diacetate | 34 | | | EGY |
| Glycol mixture, crude | 20 | | GMC. | |
| *Glycol triacetate, see* Glyceryl triacetate | 34 | | | GCT |
| Glycolic acid solution (70% or less) | 4 | 3 | GLC. | |
| Glyoxal solution (40% or less) | 19 | 3 | GOS. | |
| Glyoxylic acid solution (50% or less) | 4 | 3 | GAC. | |
| Glyphosate solution (not containing surfactant) | 7 | | GIO | RUP |
| *Grape Seed Oil, see* Oil, edible: Grape Seed | 34 | | | |
| *Groundnut Oil, see* Oil, edible: Groundnut | 34 | | | OGN (VEO) |
| *Hazelnut oil, see* Oil, edible: Hazelnut | 34 | | | OHN (VEO) |
| *Heptadecane (all isomers), see* Alkanes (C10+) (all isomers) | 31 | | | ALV (ALJ) |
| *Heptane (all isomers), see* Alkanes (C6–C9) | 31 | | HMX | ALK (HPI/HPT) |
| n-Heptanoic acid | 4 | | HEN | HEP |
| Heptanol (all isomers) | 20 | | HTX | HTN |
| Heptene (all isomers) | 30 | 2, 3 | HPX | THE |
| Heptyl acetate | 34 | | HPE. | |
| *Heptylbenzenes, see* Alkyl (C5–C8) benzenes | 32 | | | AKD |
| *Herbicide (C15–H22–NO2-Cl), see* Metolachlor | 34 | | | MCO |
| *Hexadecanol, see* Alcohols (C13+) | 20 | | | ALY (ASY/AYL) |
| 1-Hexadecylnaphthalene/1,4-bis(Hexadecyl)naphthalene mixture | 32 | | HNH | HNI |
| 1-n-Hexadecylnaphthalene (90%)/1,4-di-n-(Hexadecyl)naphthalene (10%) | 32 | | HNI | HNH |
| *Hexaethylene glycol, see* Polyethylene glycol | 20 | | HMG | PEG |
| Hexamethylene diisocyanate | 12 | | HMS | HDI |
| Hexamethylene glycol | 20 | | HMG | HXG |
| Hexamethylenediamine (molten) | 7 | 3 | HME | HMD/HMC |
| Hexamethylenediamine adipate (50% in water) | 43 | | HAM | HAN |
| Hexamethylenediamine adipate solution | 43 | | HAN | HAM |
| Hexamethylenediamine solution | 7 | | HMC | HMD/HME |
| Hexamethyleneimine | 7 | | HMI. | |
| Hexamethylenetetramine solutions | 7 | | HTS | HMT |

TABLE I TO PART 150—ALPHABETICAL LIST OF CARGOES—Continued

| Chemical name | Group No. | Footnote | CHRIS Code | Related CHRIS codes |
|---|---|---|---|---|
| *Hexane (all isomers), see* Alkanes (C6–C9) | 31 | 2 | HXS | ALK (IHA/HXA) |
| 1,6-Hexanediol, distillation overheads | 4 | 2,3 | HDO. | |
| Hexanoic acid | 4 | | HXO. | |
| Hexanol | 20 | | HXM | HEW/HEZ/HXN |
| Hexene (all isomers) | 30 | 2, 3 | HEX | HXE/HXT/HXU/HXV/MPN/MTN |
| Hexyl acetate | 34 | | HAE. | |
| *Hexylbenzenes, see* Alkyl (C5–C8) benzenes | 32 | | | AKD |
| *Hexylene glycol, see* hexamethylene glycol | 20 | | HXG | HMG |
| *Hog grease, see* Lard | 34 | | | LRD |
| Hydrochloric acid | 1 | | HCL. | |
| *Hydrofluorosilicic acid, (25% or less), see* Fluorosilicic acid (30% or less) | 1 | | | FSJ (FSK/FSL/HFS) |
| bis (Hydrogenated tallow alkyl) methyl amines | 7 | | HTA. | |
| Hydrogen peroxide solutions (over 60% but not over 70% by mass) | 0 | 1, 3 | HPS | HPN/HPO |
| Hydrogen peroxide solutions (over 8% but not over 60% by mass) | 0 | 1, 3 | HPN | HPO/HPS |
| alpha-Hydro-omega-hydroxytetradeca (oxytetramethylene) | 40 | | HTO | PYS/PYT |
| Hydrogenated starch hydrolysate | 0 | 1, 3 | HSH. | |
| 2-Hydroxyethyl acrylate | 14 | 2 | HAI. | |
| N-(Hydroxyethyl)ethylenediamine triacetic acid, trisodium salt solution | 43 | | HET. | |
| N,N-bis(2-Hydroxyethyl) oleamide | 10 | | HOO. | |
| 2-Hydroxy-4-(methylthio)butanoic acid | 4 | | HBA. | |
| *Hydroxy terminated polybutadiene, see* Polybutadiene, hydroxy terminated | 31 | | | PHT |
| *Illipe oil, see* Oil, edible: Illipe | 34 | | | ILO (VEO) |
| Isoamyl alcohol | 20 | 3 | IAA | AAI/AAL/AAN/APM/ASE |
| Isobutyl alcohol | 20 | 2, 3 | IAL | BAN/BAS/BAT/BAY |
| Isobutyl formate | 34 | 3 | BFI | BFN/BFO |
| Isobutyl methacrylate | 14 | 3 | BMI | BMH/BMN |
| Isononylaldehyde (crude) | 19 | | INC. | |
| Isophorone | 18 | 2 | IPH. | |
| Isophorone diamine | 7 | | IPI. | |
| Isophorone diisocyanate | 12 | | IPD. | |
| Isoprene (all isomers) | 30 | | IPR. | |
| Isoprene (part refined) | 30 | | IPS | IPR/ISC |
| Isoprene concentrate (Shell) | 30 | | ISC. | |
| Isopropanolamine | 8 | 3 | MPA | IPF/PAX/PLA |
| Isopropanolamine solution | 8 | 3 | PAI | MPA/PAY/PLA/PRG |
| *iso-Propanolamine, see* Isopropanolamine | 8 | | | MPA (PAX/PLA) |
| Isopropyl acetate | 34 | 3 | IAC | PAT |
| Isopropyl alcohol | 20 | 2, 3 | IPA | IPB/PAL |
| Isopropylamine | 7 | 3 | IPP | IPO/IPQ/PRA |
| Isopropylamine (70% or less) solution | 7 | 2, 3 | IPQ | IPO/IPP/PRA |
| *iso-Propylamine solution, see* Isopropylamine (70% or less) solution | 7 | | | IPQ (IPO/IPP/PRA) |
| *Isopropylbenzenes, see* Alkyl (C3–C4) benzenes | 32 | | | AKC (CUM/PBY/PBZ) |
| Isopropylcyclohexane | 31 | 3 | IPX. | |
| *iso-Propyl cyclohexane, see* Isopropylcyclohexane | 31 | | | IPX |
| Isopropyl ether | 41 | 3 | IPE | PRL/PRN |
| *Jatropha oil, see* Oil, misc: Jatropha | 4 | | | JTO |
| Jet fuels: | | | | IBR |
| JP–4 | 33 | | JPF. | |
| JP–5 | 33 | | JPV. | |
| JP–8 | 33 | | JPE. | |
| Kaolin clay solution | 43 | | KLC | KLS |
| Kaolin slurry | 43 | | KLS | KLC |
| Kerosene | 33 | | KRS. | |
| Ketone residue | 18 | | KTR. | |
| Kraft black liquor | 5 | | KBL | KPL |
| Kraft pulping liquors (free alkali content 3% or more) (Black, Green, or White). | 5 | | KPL | KBL |
| Lactic acid | 0 | 1, 2 | LTA. | |
| Lactonitrile solution (80% or less) | 37 | 3 | LNI. | |
| Lard | 34 | | LRD | OLD |
| Latex, ammonia (1% or less)- inhibited | 30 | 3 | LTX. | |
| Latex, liquid synthetic | 43 | | LLS | LCB/LCC/LSB |
| Latex: Carboxylated Styrene-Butadiene copolymer; Styrene-Butadiene rubber. | 43 | 3 | LCC | LCB/LSB |
| Lauric acid | 34 | | LRA. | |
| Lauric acid methyl ester/Myristic acid methyl ester mixture | 34 | | LMM. | |
| *Lauryl polyglucose (50% or less), see* Alkyl (C12–C14) polyglucoside solution (55% or less). | 43 | | LAP | AMG |
| *Lauryl polyglucose, see* Alkyl (C12–C14) polyglucoside solution (55% or less). | 43 | | | AGM/LAP |

TABLE I TO PART 150—ALPHABETICAL LIST OF CARGOES—Continued

| Chemical name | Group No. | Footnote | CHRIS Code | Related CHRIS codes |
|---|---|---|---|---|
| Lecithin | 34 | | LEC. | |
| Lignin liquor | 43 | | LNL | ALG/CLL/LGA/LGM/LSL/SHC/SHP/SHQ/SLP |
| Ligninsulfonic acid, magnesium salt solution | 43 | 3 | LGM | LGA/LNL/LSL |
| *Ligninsulfonic acid, sodium salt solution, see* Lignin liquor or Sodium lignosulfonate solution. | 43 | | LGA | LNL or SLG |
| *d-Limonene, see* Dipentene | 30 | | | DPN |
| Linear alkyl (C12–C16) propoxyamine ethoxylate | 8 | | LPE. | |
| *Linseed oil, see* Oil, misc: Linseed | 34 | | | OLS |
| *Liquefied Natural Gas, see* Methane | 31 | | LNG | MTH |
| Liquid chemical wastes | 0 | 1, 3 | LCW. | |
| Liquid Streptomyces solubles | 43 | | | |
| Long-chain alkaryl polyether (C11–C20) | 41 | | LCP. | |
| Long-chain alkyl amine | 7 | | LAA. | |
| Long-chain alkylphenate/Phenol sulfide mixture | 21 | | LPS. | |
| Long-chain alkaryl sulfonic acid (C16–C60) | 0 | 1 | LCS. | |
| Long-chain alkyl (C13+) salicylic acid | 4 | | LAS. | |
| Long-chain polyetheramine in alkyl(C2–C4)benzenes | 7 | | LCE. | |
| L-Lysine solution (60% or less) | 43 | 3 | LYS. | |
| Magnesium chloride solution | 0 | 1, 2 | MGL. | |
| Magnesium hydroxide slurry | 5 | | MHS. | |
| Magnesium long-chain alkaryl sulfonate (C11–C50) | 34 | | MAS | MSE |
| Magnesium long-chain alkyl phenate sulfide (C8–C20) | 34 | | MPS. | |
| Magnesium long-chain alkyl salicylate (C11+) | 34 | | MLS. | |
| Magnesium nitrate solution (66.7%) | 43 | | MGP | MGN/MGO |
| *Magnesium nonyl phenol sulfide, see* Magnesium long-chain alkyl phenate sulfide (C8–C20). | 34 | | | MPS |
| *Magnesium sulfonate, see* Magnesium long-chain alkaryl sulfonate (C11–C50). | 34 | | MSE | MAS |
| Maleic anhydride | 11 | | MLA. | |
| Maleic anhydride/sodium allylsulphonate copolymer solution | 11 | | | PHN (CFO/CRL/CRO/CRS/CSO) |
| Maltitol solution | 0 | 1, 3 | MTI. | |
| *Mango kernel oil, see* Oil, edible: Mango kernel | 34 | | | MKO (VEO) |
| Mercaptobenzothiazol, sodium salt solution | 5 | | SMB | MBT |
| 2-Mercaptobenzothiazol (in liquid mixture) | 5 | | BTM | SMD |
| Mesityl oxide | 18 | 2 | MSO. | |
| Metam sodium solution | 7 | | MSS | SMD |
| Methacrylic acid | 4 | | MAD. | |
| Methacrylic acid—Alkoxypoly(alkylene oxide) methacrylate copolymer, sodium salt aqueous solution (45% or less). | 20 | 3 | MAQ. | |
| Methacrylic resin in ethylene dichloride | 14 | | MRD. | |
| Methacrylonitrile | 15 | 2 | MET. | |
| Methane | 31 | | MTH | LNG |
| 3-Methoxy-1-butanol | 20 | | MTX. | |
| 3-Methoxybutyl acetate | 34 | | MOA. | |
| *N-(2-Methoxy-1-methyl ethyl)-2-ethyl-6-methyl chloroacetanilide,* see Metolachlor. | 34 | | | MCO |
| 1-Methoxy-2-propyl acetate | 34 | | MXP. | |
| *Methoxy triglycol, see* Poly(2–8)alkylene glycol monoalkyl (C1–C6) ether | 40 | | MTG | PAG (TGY) |
| Methyl acetate | 34 | | MTT. | |
| Methyl acetoacetate | 34 | | MAE. | |
| Methyl acetylene/Propadiene mixture | 30 | | MAP. | |
| Methyl acrylate | 14 | | MAM. | |
| Methyl alcohol | 20 | 2 | MAL. | |
| Methylamine solutions (42% or less) | 7 | 3 | MSZ. | |
| Methyl amyl acetate | 34 | | MAC. | |
| Methyl amyl alcohol | 20 | | MAA | MIC |
| Methyl amyl ketone | 18 | | MAK. | |
| N-Methylaniline | 9 | 3 | MAN. | |
| alpha-Methylbenzyl alcohol with Acetophenone (15% or less) | 20 | 3 | MBA. | |
| Methyl bromide | 36 | | MTB. | |
| *Methyl butanol, see* the amyl alcohols | 20 | | | AAI/AAL/AAN/APM/ASE/IAA |
| *Methyl butenes, see* Pentene (all isomers) | 30 | | | PTX (AMW/AMZ/PTE) |
| Methyl butenol | 20 | | MBL. | |
| Methyl tert-butyl ether | 41 | 2 | MBE. | |
| Methyl butyl ketone | 18 | 2 | MBB | MBK/MIK |
| Methyl 3-(3,5 di-tert-butyl-4-hydroxyphenyl) propionate crude melt | 20 | | MYP. | |
| Methylbutynol | 20 | | MBY | MHB |
| 3-Methyl butyraldehyde | 19 | | MBR. | |

TABLE I TO PART 150—ALPHABETICAL LIST OF CARGOES—Continued

| Chemical name | Group No. | Footnote | CHRIS Code | Related CHRIS codes |
|---|---|---|---|---|
| Methyl butyrate | 34 | | MBU. | |
| Methyl chloride | 36 | | MTC. | |
| Methylcyclohexane | 31 | | MCY. | |
| Methylcyclohexanemethanol (crude) | 20 | | MYH. | |
| Methylcyclopentadiene dimer | 30 | | MCK. | |
| Methylcyclopentadienyl manganese tricarbonyl | 0 | 1, 3 | MCT | MCW |
| Methylcyclopentadienyl manganese tricarbonyl (60–70%) in mineral oil | 0 | 1 | MCW | MCT |
| Methyl diethanolamine | 8 | | MDE | MAB |
| Methyl ethyl ketone | 18 | 2 | MEK. | |
| 2-Methyl-6-ethyl aniline | 9 | | MEN. | |
| Methyl formate | 34 | | MFM. | |
| N-Methylglucamine solution (70% or less) | 43 | 3 | MGC. | |
| 2-Methylglutaronitrile | 37 | | MLN | MGN |
| 2-Methylglutaronitrile with 2-Ethylsuccinonitrile (12% or less) | 37 | 3 | MGE | MLN |
| Methyl heptyl ketone | 18 | | MHK. | |
| 2-Methyl-2-hydroxy-3-butyne | 20 | | MHB | MBY |
| *Methyl isoamyl ketone, see* Methyl amyl ketone | 18 | | MAJ | MAK |
| *Methyl isobutyl carbinol, see* Methyl amyl alcohol | 20 | | MIC | MAA |
| Methyl isobutyl ketone | 18 | 2 | MIK | MBB/MBK |
| Methyl methacrylate | 14 | | MMM. | |
| Methylene bridged isobutylenated phenols | 21 | | MBP. | |
| *Methylene chloride, see* Dichloromethane | 36 | | | DCM |
| 3-Methyl-3-methoxybutanol | 20 | | MXB. | |
| 3-Methyl-3-methoxybutyl acetate | 34 | | MMB. | |
| Methyl naphthalene (molten) | 32 | 3 | MNA. | |
| Methylolureas | 19 | | MUS. | |
| *2-Methyl pentane, see* Hexane (all isomers) | 31 | | | HXS (ALK/HXA/IHA/NHX) |
| 2-Methyl-1,5-pentanediamine | 7 | | MPM. | |
| *4-Methyl-1-pentene, see* Hexene (all isomers) | 30 | | MTN | HEX (HXE/HXT/HXU/HXV/MPN) |
| *2-Methyl-1-pentene, see* Hexene (all isomers) | 30 | | MPN | HEX (HXE/HXT/HXU/HXV/MTN) |
| *Methyl tert-pentyl ether, see* tert-Amyl methyl ether | 41 | | | AYE |
| 2-Methyl-1,3-propanediol | 20 | | MDL. | |
| Methyl propyl ketone | 18 | | MKE. | |
| 2-Methyl-5-ethylpyridine | 9 | | MEP. | |
| *Methylpyridine, see* the Methylpyridines | 9 | | MPQ | MPE/MPF/MPR |
| 2-Methylpyridine | 9 | 3 | MPR | MPE/MPF/MPQ |
| 3-Methylpyridine | 9 | 3 | MPE | MPF/MPQ/MPR |
| 4-Methylpyridine | 9 | 3 | MPF | MPE/MPQ/MPR |
| N-Methyl-2-pyrrolidone | 9 | 2 | MPY. | |
| Methyl salicylate | 34 | | MES. | |
| alpha-Methylstyrene | 30 | | MSR. | |
| 3-(Methylthio)propionaldehyde | 19 | | MTP. | |
| Metolachlor | 34 | | MCO. | |
| Microsilica slurry | 43 | | MOS. | |
| Milk | 43 | | MLK. | |
| Mineral spirits | 33 | | MNS. | |
| Mixed C4 Cargoes | 30 | | MIX. | |
| Molasses | 20 | | MOL | MON |
| Molasses residue (from fermentation) | 0 | 1 | MON | MOL |
| Molybdenum polysulfide long-chain alkyl dithiocarbamide complex | 0 | 1, 3 | MOP. | |
| Monochlorodifluoromethane | 36 | | MCF. | |
| *Monoethanolamine, see* Ethanolamine | 8 | | MEA. | |
| *Monoethylamine, see* Ethylamine | 7 | | | EAM (EAN/EAO) |
| *Monoisopropanolamine, see* Isopropanolamine | 8 | | | MPA (PLA/PLX) |
| Morpholine | 7 | 2 | MPL. | |
| Motor fuel anti-knock compound (containing lead alkyls) | 0 | 1 | MFA. | |
| *MTBE, see* Methyl tert-butyl ether | 41 | | | MBE |
| Myrcene | 30 | | MRE. | |
| Naphtha: | | | | |
| Aromatic | 33 | | NAR. | |
| Coal tar naphtha solvent | 33 | | NCT. | |
| Heavy | 33 | | NAG. | |
| Paraffinic | 33 | | NPF. | |
| Petroleum | 33 | | PTN. | |
| Solvent | 33 | | NSV. | |
| Stoddard solvent | 33 | | NSS. | |
| Varnish Makers' and Painters' | 33 | | NVM. | |
| Naphthalene (molten) | 32 | 3 | NTM. | |
| Naphthalene still residue | 32 | 2 | NSR. | |

TABLE I TO PART 150—ALPHABETICAL LIST OF CARGOES—Continued

| Chemical name | Group No. | Footnote | CHRIS Code | Related CHRIS codes |
|---|---|---|---|---|
| Naphthalene sulfonic acid, sodium salt solution | 34 | | NSB | NSA |
| Naphthalene sulfonic acid-formaldehyde copolymer, sodium salt solution | 0 | 1 | NFS | |
| Naphthenic acid | 4 | | NTI. | |
| Naphthenic acid, sodium salt solution | 43 | | NTS. | |
| Neodecanoic acid | 4 | | NEA | DCO/NAT |
| NIAX POLYOL APP 240C | 0 | 1, 2 | NXP. | |
| Nitrating acid (mixture of Sulfuric and Nitric acids) | 0 | 1 | NIA. | |
| Nitric acid (70% and over) | 0 | 1, 2, 3 | NCE | NAC/NCD |
| Nitric acid (less than 70%) | 3 | 2 | NCD | NAC/NCE |
| *Nitric Acid, fuming, see* Nitric acid (70% and over) | 0 | 1, 2, 3 | | NCE |
| *Nitric Acid, red fuming, see* Nitric acid (70% and over) | 0 | 1, 2, 3 | | NCE |
| Nitrilotriacetic acid, trisodium salt solution | 34 | 3 | NCA. | |
| Nitrobenzene | 42 | | NTB. | |
| *o-Nitrochlorobenzene, see* o-Chloronitrobenzene | 42 | | | CNO (CNP) |
| Nitroethane | 42 | | NTE. | |
| Nitroethane (80%)/Nitropropane (20%) | 42 | 2, 3 | NNL | NNM/NNO/NPM/NPN/NPP/NTE |
| Nitroethane/1-Nitropropane (each 15% or more) mixture | 42 | 2 | NNO | NNL/NNM/NPM/NPN/NPP/NTE |
| Nitrogen | 0 | 1 | NXX. | |
| Nitrophenol (mixed isomers) | 42 | | NPX | NIP/NPH/NTP |
| o-Nitrophenol (molten) | 0 | 1, 2 | NTP | NIP/NPH/NPX |
| Nitropropane (60%)/Nitroethane (40%) mixture | 42 | | NNM | NNL/NNO/NPM/NPN/NPP/NTE |
| 1-or 2-Nitropropane | 42 | | NPM | NPN/NPP |
| o- or p-Nitrotoluenes | 42 | 3 | NIT | NIE/NTR/NTT |
| *Nonane (all isomers), see* Alkanes (C6–C9) | 31 | | NAX | ALK (NAN) |
| Nonanoic acid (all isomers) | 4 | | NNA | NAI/NIN |
| Nonanoic/Tridecanoic acid mixture | 4 | | NAT | NAI/NIN/NNA |
| *Non-edible industrial grade palm oil, see* Oil, misc: Palm, non-edible industrial grade. | 34 | | | OPB |
| Nonene (all isomers) | 30 | 2 | NOO | NNE/NON/OAM/OFX/OFY |
| Nonyl acetate | 34 | | NAE. | |
| Nonyl alcohol (all isomers) | 20 | 2 | NNS | ALR/DBC/NNI/NNN |
| *Nonylbenzene, see* Alkyl(C9+)benzenes | 32 | | | AKB |
| Nonyl methacrylate monomer | 14 | | NMA. | |
| Nonyl phenol | 21 | | NNP. | |
| *Nonyl phenol poly(4+)ethoxylate, see* Alkyl (C7–C11) phenol poly (4–12) ethoxylate. | 40 | | NPE | APN |
| *Nonyl phenol sulfide (90% or less) solution, see* Alkyl phenol sulfide (C8–C40). | 34 | | | AKS (NPS) |
| Nonylphenol (48–62%)/Phenol (42–48%)/Dinonylphenol (1–10%) mixture | 21 | | NYL. | |
| Non-noxious Liquid Substance, (12) n.o.s. Cat OS | 0 | 1 | NOL. | |
| Noxious Liquid Substance, NF, (1) n.o.s. Cat X | 0 | 1 | | |
| Noxious Liquid Substance, F, (2) n.o.s. Cat X | 0 | 1 | | |
| Noxious Liquid Substance, NF, (3) n.o.s. Cat X | 0 | 1 | | |
| Noxious Liquid Substance, F, (4) n.o.s. Cat X | 0 | 1 | | |
| Noxious Liquid Substance, NF, (5) n.o.s. Cat Y | 0 | 1 | | |
| Noxious Liquid Substance, F, (6) n.o.s. Cat Y | 0 | 1 | | |
| Noxious Liquid Substance, NF, (7) n.o.s. Cat Y | 0 | 1 | | |
| Noxious Liquid Substance, F, (8) n.o.s. Cat Y | 0 | 1 | | |
| Noxious Liquid Substance, NF, (9) n.o.s. Cat Z | 0 | 1 | | |
| Noxious Liquid Substance, F, (10) n.o.s. Cat Z | 0 | 1 | | |
| Noxious Liquid Substance, (11) n.o.s. Cat Z | 0 | 1 | | |
| *Nutmeg butter oil, see* Oil, edible: Nutmeg butter | 34 | | | ONB (VEO) |
| *1-Octadecene, see* the olefin or alpha-olefin entries | 30 | | | OAM/OFZ |
| *1-Octadecanol, see* Stearyl alcohol | 20 | | | SYL (ALY/ASY) |
| Octadecenoamide solution | 10 | | ODD. | |
| *Octadecenol (oleyl alcohol), see* Alcohols (C13+) | 20 | | | ALY (AYL/ASY/OYL) |
| Octamethylcyclotetrasiloxane | 34 | 3 | OSA. | |
| *Octane (all isomers), see* Alkanes (C6–C9) | 31 | | OAX | ALK (IOO/OAN) |
| Octanoic acid (all isomers) | 4 | | OAY | OAA/EHO |
| Octanol (all isomers) | 20 | 2 | OCX | EHX/OPA/OTA |
| Octene (all isomers) | 30 | 2 | OTX | OAM/OFC/OFY/OFW/OTE |
| n-Octyl acetate | 34 | | OAF | OAE |
| *Octyl alcohol, see* Octanol (all isomers) | 20 | 2 | | OCX (EHX/IOA/OTA) |
| Octyl aldehydes | 19 | | OAL | EHA/IOC/OLX |
| *Octylbenzenes, see* Alkyl (C5–C8) benzenes | 32 | | | AKD |
| Octyl decyl adipate | 34 | | ODA. | |
| n-Octyl mercaptan | 0 | | OME. | |
| *Octyl nitrates (all isomers), see* Alkyl (C7–C9) nitrates | 34 | | ONE | AKN |

TABLE I TO PART 150—ALPHABETICAL LIST OF CARGOES—Continued

| Chemical name | Group No. | Footnote | CHRIS Code | Related CHRIS codes |
|---|---|---|---|---|
| Octyl phenol | 21 | | OPH. | |
| *Octyl phthalate, see* Dioctyl phthalate | 34 | | | DAH (DIE/DIO/DLK/DOP) |
| Oil, edible: | | | | |
| Beechnut | 34 | | OBN. | |
| Castor | 34 | | OCA | VEO |
| Cocoa butter | 34 | | OCB | VEO |
| Coconut | 34 | | OCC | VEO |
| Cod liver | 34 | | OCL | AFN |
| Corn | 34 | | OCO | VEO |
| Cotton seed | 34 | | OCS | VEO |
| Fish | 34 | 2 | OFS | AFN |
| Grape seed | 34 | | | |
| Groundnut | 34 | | OGN | VEO |
| Hazelnut | 34 | | OHN | VEO |
| Illipe | 34 | | ILO | VEO |
| Lard | 34 | | OLD | AFN |
| *Maize, see* Oil, edible: Corn | 34 | | | OCO (VEO) |
| Mango kernel | 34 | 3 | MKO. | |
| Nutmeg butter | 34 | | ONB | VEO |
| Olive | 34 | | OOL | VEO |
| Palm | 34 | 2 | OPM | VEO |
| Palm kernel | 34 | | OPO | VEO |
| Palm kernel olein | 34 | | PKO | VEO |
| Palm kernel stearin | 34 | | PKS | VEO |
| Palm mid fraction | 34 | | PFM | VEO |
| Palm olein | 34 | | PON | VEO |
| Palm stearin | 34 | | PMS | VEO |
| Peanut | 34 | | OPN | VEO |
| Poppy | 34 | | OPY | VEO |
| Poppy Seed | 34 | | OPS | VEO |
| Raisin seed | 34 | | ORA | VEO |
| Rapeseed | 34 | | ORP | VEO |
| Rapeseed, (low erucic acid containing less than 4% free fatty acids) | 34 | | ORO | ORP/VEO |
| Rice bran | 34 | | ORB | VEO |
| Safflower | 34 | | OSF | VEO |
| Salad | 34 | | OSL | VEO |
| Sesame | 34 | | OSS | VEO |
| Shea butter | 34 | | OSH | VEO |
| Soyabean | 34 | 2 | OSB | VEO |
| *Sunflower, see* Oil, edible: Sunflower seed | 34 | | OSN | VEO |
| Sunflower seed | 34 | | OSN | VEO |
| Tucum | 34 | | OTC | VEO |
| Vegetable | 34 | | OVG | VEO |
| Walnut | 34 | | OWN | VEO |
| Oil, fuel: | | | | |
| No. 1 | 33 | | OON. | |
| No. 1–D | 33 | | OOD. | |
| No. 2 | 33 | | OTW. | |
| No. 2–D | 33 | | OTD. | |
| No. 4 | 33 | | OFR. | |
| No. 5 | 33 | | OFV. | |
| No. 6 | 33 | | OSX. | |
| Oil, misc: | | | | |
| Acid mixture from soybean, corn (maize) and sunflower oil refining | 34 | | AOM. | |
| Aliphatic | 33 | | OML. | |
| Animal | 34 | | OMA | AFN |
| Aromatic | 33 | | | |
| Camelina | 34 | | OCI. | |
| Cashew nut shell oil (untreated) | 34 | | OCN. | |
| Clarified | 33 | | OCF. | |
| Coal | 33 | | OMC. | |
| Coconut fatty acid | 34 | 2 | CFA. | |
| Coconut, fatty acid methyl ester | 34 | | OCM. | |
| Cotton seed oil, fatty acid | 34 | | CFY. | |
| Crude | 33 | | OFA. | |
| Diesel | 33 | | ODS. | |
| Disulfide | 0 | 1 | ODI. | |
| Gas, cracked | 33 | | GOC. | |
| Gas, high pour | 33 | | OGP. | |
| Gas, low pour | 33 | | OGL. | |
| Gas, low sulfur | 33 | | OGS. | |

TABLE I TO PART 150—ALPHABETICAL LIST OF CARGOES—Continued

| Chemical name | Group No. | Footnote | CHRIS Code | Related CHRIS codes |
|---|---|---|---|---|
| Heartcut distillate | 33 | | OHD. | |
| Jatropha | 4 | | JTO. | |
| Lanolin | 34 | | OLL | AFN |
| Linseed | 33 | | OLS. | |
| Lubricating | 33 | 2 | OLB. | |
| Mineral | 33 | | OMN. | |
| Mineral seal | 33 | | OMS. | |
| Motor | 33 | | OMT. | |
| Neatsfoot | 33 | | ONF | AFN |
| Oiticica | 34 | | OOI. | |
| Palm acid | 34 | | PLM. | |
| Palm fatty acid distillate | 34 | | PFD. | |
| Palm oil, fatty acid methyl ester | 34 | | OPE. | |
| Palm kernel acid | 34 | | OPK. | |
| Palm kernel fatty acid distillate | 34 | | PNG. | |
| Palm, non-edible industrial grade | 34 | | OPB. | |
| Penetrating | 33 | | OPT. | |
| Perilla | 34 | | OPR. | |
| Pilchard | 34 | | OPL | AFN |
| Pine | 33 | | OPI | PNL |
| Rapeseed fatty acid methyl esters | 34 | 3 | ORP. | |
| Residual | 33 | | ORL. | |
| Resin, distilled | 33 | | ORR. | |
| Road | 33 | | ORD. | |
| Rosin | 33 | | ORN. | |
| Seal | 34 | | | |
| Soapstock | 34 | | OIS. | |
| Soyabean (epoxidized) | 34 | | OSC | EVO |
| Soyabean fatty acid methyl ester | 34 | | | OST |
| Spindle | 33 | | OSD. | |
| Tall | 34 | | OTL | OTI/OTJ |
| Tall, crude | 34 | 2 | OTI | OTJ/OTL |
| Tall, distilled | 34 | 2 | OTJ | OTI/OTL |
| Tall, fatty acid | 34 | 2 | OTT. | |
| Tall, fatty acid (resin acids less than 20%) | 34 | 2 | OTK | OTT |
| Tall pitch | 34 | | OTP. | |
| Transformer | 33 | | OTF. | |
| Tung | 34 | | OTG. | |
| Turbine | 33 | | OTB. | |
| Vacuum gas oil | 33 | | OVC. | |
| *Oleamide solution, see* Octadecenoamide solution | 10 | | | ODD |
| Olefin-Alkyl ester copolymer (molecular weight 2000+) | 30 | | OCP. | |
| Olefin mixture (C7–C9) C8 rich, stabilized | 30 | 3 | OFC | OFW/OFY/OFX |
| Olefin mixtures (C5–C7) | 30 | 3 | OFX | OAM/OFC/OFW/OFX/OFZ |
| Olefin mixtures (C5–C15) | 30 | 3 | OFY | OAM/OFC/OFW/OFX/OFZ |
| Olefins (C13+, all isomers) | 30 | | OFZ | OAM/OFW |
| alpha-Olefins (C6–C18) mixtures | 30 | | OAM | OFC/OFW/OFX/OFY/OFZ |
| Oleic acid | 4 | | OLA. | |
| Oleum | 0 | 1, 2 | OLM | SAC/SFX |
| *Oleyl alcohol, see* Alcohols (C13+) | 20 | | OYL | ALY (ASY) |
| Oleylamine | 7 | | OLY. | |
| *Olive oil, see* Oil, edible: Olive | 34 | | | OOL (VEO) |
| Orange juice (concentrated) | 0 | 1 | OJC | OJN |
| Orange juice (not concentrated) | 0 | 1 | OJN | OJC |
| Organomolybdenum amide | 10 | | OGA. | |
| *ORIMULSION, see* Asphalt emulsion | 33 | | | ASQ |
| Oxyalkylated alkyl phenol formaldehyde | 33 | | OPF. | |
| Oxygenated aliphatic hydrocarbon mixture | 0 | 1, 3 | OAH. | |
| *Palm acid oil, see* Oil, misc: Palm acid | 34 | 3 | | PLM |
| *Palm fatty acid distillate, see* Oil, misc: Palm fatty acid distillate | 34 | 3 | | PFD |
| *Palm kernel acid oil, see* Oil, misc: Palm kernel acid | 34 | | | PNO |
| *Palm kernel acid oil, methyl ester, see* Oil, misc: Palm kernel acid, methyl ester. | 34 | | | PNF |
| *Palm kernel oil, see* Oil, edible: Palm kernel | 34 | | | OPO (VEO) |
| *Palm kernel oil fatty acid distillate, see* Oil, misc: Palm kernel fatty acid distillate. | 34 | | | PNG |
| *Palm kernel olein, see* Oil, edible: Palm kernel olein | 34 | 3 | | PKO (VEO) |
| *Palm kernel stearin, see* Oil, edible: Palm kernel stearin | 34 | 3 | | PKS (VEO) |
| *Palm mid fraction, see* Oil, edible: Palm mid fraction | 34 | 3 | | PFM (VEO) |
| *Palm oil, see* Oil, edible: Palm | 34 | 2, 3 | | OPM (VEO) |
| *Palm oil fatty acid methyl ester, see* Oil, misc: Palm fatty acid methyl ester | 34 | 3 | | OPE |

TABLE I TO PART 150—ALPHABETICAL LIST OF CARGOES—Continued

| Chemical name | Group No. | Footnote | CHRIS Code | Related CHRIS codes |
|---|---|---|---|---|
| *Palm olein, see* Oil, edible: Palm Olein | 34 | 3 | | PON (VEO) |
| *Palm stearin, see* Oil, edible: Palm stearin | 34 | | | PMS (VEO) |
| Parachlorobenzotrifluoride | 32 | | PBF. | |
| *Paraffin wax, see* Waxes: Paraffin | 31 | 3 | | WPF |
| *n-Paraffins (C10–C20), see* n-Alkanes (C10+) | 31 | | PFN | ALJ |
| Paraldehyde | 19 | | PDH. | |
| Paraldehyde-Ammonia reaction product | 9 | | PRB. | |
| *Peanut, see* Oil, edible: Peanut | 34 | | | OPN (VEO) |
| Pentachloroethane | 36 | | PCE. | |
| Pentacosa(oxypropane-2,3-diyl)s | 20 | | POY | |
| P*entadecanol, see* Alcohols (C13+) | 20 | | PDC | ALY |
| 1,3-Pentadiene | | PDE | PDN. | |
| 1,3-Pentadiene (greater than 50%), Cyclopentene and isomers, mixtures | 30 | 3 | PMM. | |
| *Pentaethylene glycol, see* Polyethylene glycols | 20 | | | PEG |
| *Pentaethylene glycol methyl ether, see* Poly(2–8)alkylene glycol monoalkyl (C1–C6) ether. | 40 | | | PAG |
| Pentaethylenehexamine | 7 | | PEN. | |
| Pentaethylenehexamine/Tetraethylenepentamine mixture | 7 | | PEP. | |
| Pentane (all isomers) | 31 | | PTY | IPT/PTA |
| Pentanoic acid | 4 | | POC. | |
| n-Pentanoic acid (64%)/2-Methyl butyric acid (36%) mixture | 4 | | POJ | POC |
| *Pentasodium salt of Diethylenetriamine pentaacetic acid solution, see* Diethylenetriamine pentaacetic acid, pentasodium salt solution. | 43 | | | DYS |
| Pentene (all isomers) | 30 | | PTX | PTE |
| Pentyl aldehyde | 19 | | PYL. | |
| n-Pentyl propionate | 34 | | PPE. | |
| Perchloroethylene | 36 | 2 | PER | TTE |
| Petrolatum | 33 | | PTL. | |
| Phenol | 21 | 2 | PHN | PNS |
| Phenol solutions (2% or less) | 43 | | PNS | PHN |
| 1-Phenyl-1-xylyl ethane | 32 | | PXE. | |
| Phosphate esters | 34 | | PZE. | |
| Phosphate esters, alkyl(C12–C14)amine | 7 | | PEA. | |
| Phosphoric acid | 1 | 2 | PAC. | |
| Phosphorus, yellow or white | 0 | 1 | PPW | PPB/PPR |
| Phosphosulfurized bicycle terpene | 0 | 1 | PBT. | |
| Phthalate based polyester polyol | 0 | 1, 2 | PBE. | |
| Phthalic anhydride (molten) | 11 | | PAN. | |
| *PIB, see* Poly(4+)Isobutylene (MW≤224) | 30 | | | |
| alpha-Pinene | 30 | | PIO | PIB/PIN |
| beta-Pinene | 30 | | PIP | PIN/PIO |
| *Pine oil, see* Oil, misc: Pine | 33 | | PNL | OPI |
| Piperazine (70% or less) | 7 | | PIZ | PPB/PPZ |
| Piperazine (crude) | 7 | | PZC | PPZ/PIZ |
| Piperazine, 68% solution | 7 | | | |
| Piperylene concentrate | 30 | | PIC | PDE/PDN |
| Polyacrylic acid solution (40% or less) | 43 | | PYA. | |
| Polyalkenyl succinic anhydride amine | 7 | | PSN. | |
| Polyalkyl acrylate | 14 | | PAY. | |
| Polyalkyl(C18–C22) acrylate in Xylene | 14 | | PIX. | |
| Polyalkyl alkenamine succinimide, molybdenum oxysulfide | 10 | | PSO. | |
| Polyalkylene glycols/Polyalkylene glycol monoalkyl ethers mixtures | 40 | | PPX. | |
| *Polyalkylene glycol butyl ether, see* Poly(2–8)alkylene glycol monoalkyl(C1–C6) ether. | 40 | | PGB | PAG |
| Poly(2–8)alkylene glycol monoalkyl(C1–C6) ether | 40 | 2 | PAG. | |
| *Including:* | | | | |
| *Diethylene glycol butyl ether* | 40 | | | |
| *Diethylene glycol ethyl ether* | 40 | | | |
| *Diethylene glycol n-hexyl ether* | 40 | | | |
| *Diethylene glycol methyl ether* | 40 | | | |
| *Diethylene glycol propyl ether* | 40 | | | |
| *Dipropylene glycol butyl ether* | 40 | | | |
| *Dipropylene glycol methyl ether* | 40 | | | |
| *Polyalkylene glycol butyl ether* | 40 | | | |
| *Polyethylene glycol monoalkyl ether* | 40 | | | |
| *Polypropylene glycol methyl ether* | 40 | | | |
| *Tetraethylene glycol methyl ether* | 40 | | | |
| *Triethylene glycol butyl ether* | 40 | | | |
| *Triethylene glycol ethyl ether* | 40 | | | |
| *Triethylene glycol methyl ether* | 40 | | | |
| *Tripropylene glycol methyl ether* | 40 | | | |

TABLE I TO PART 150—ALPHABETICAL LIST OF CARGOES—Continued

| Chemical name | Group No. | Footnote | CHRIS Code | Related CHRIS codes |
|---|---|---|---|---|
| Poly(2–8)alkylene glycol monoalkyl(C1–C6) ether acetate | 34 | | PAF. | |
| *Including:* | | | | |
| *Diethylene glycol butyl ether acetate* | 34 | | | |
| *Diethylene glycol ethyl ether acetate* | 34 | | | |
| *Diethylene glycol methyl ether acetate* | 34 | | | |
| Polyalkylene oxide polyol | 20 | | PAO. | |
| Polyalkyl (C10–C20) methacrylate | 14 | | PMT | PYY |
| Polyalkyl methacrylate in mineral oil | 14 | | PYY | PMT |
| Polyalkyl(C10–C18)methacrylate/Ethylene propylene copolymer mixture. | 14 | | PEM. | |
| Polyalpha olefins | 31 | | PYO. | |
| Polyaluminum chloride solution | 1 | | PLS. | |
| Polybutadiene, hydroxyl terminated | 20 | | PHT. | |
| Polybutene | 33 | | PLB. | |
| Polybutenyl succinimide | 10 | | PBS. | |
| *Polycarboxylic ester (C9+), see* Ditridecyl adipate | 34 | | | DTY |
| Poly(2+)cyclic aromatics | 32 | | PCA. | |
| *Polydimethylsiloxane, see* Dimethylpolysiloxane | 34 | | | DMP |
| Polyether, borated | 41 | | PED. | |
| Polyether (molecular weight 1350+) | 41 | | PYR. | |
| Polyether polyols | 41 | | PEO. | |
| Polyethylene glycol | 40 | | PEG. | |
| Polyethylene glycol dimethyl ether | 40 | | PEF. | |
| Poly (ethylene glycol) methylbutenyl ether (MW > 1000) | 40 | | PBN. | |
| *Polyethylene glycol monoalkyl ether, see* Poly(2–8)alkylene glycol monoalkyl(C1–C6) ether. | 40 | | PEE | PAG |
| Polyethylene polyamines | 7 | 2 | PEB | PEY |
| Polyethylene polyamines (more than 50% C5–C20 Paraffin oil) | 7 | 2, 3 | PEY | PEB |
| Polyferric sulfate solution | 34 | | PSS. | |
| Polyglycerine/Sodium salts solution (containing less than 3% Sodium hydroxide). | 20 | 2 | PGT | PGS |
| Polyglycerol | 20 | | PGL. | |
| Poly(iminoethylene)-graft-N-poly(ethyleneoxy) solution (90% or less) | 7 | 3 | PIG | PIM |
| Polyisobutenamine in aliphatic (C10–C14) solvent | 7 | 2 | PIB | PIA |
| Polyisobutenyl anhydride adduct | 11 | | PBA. | |
| Polyisobutenyl succinimide | 10 | | PIS. | |
| Poly(4+)isobutylene | 30 | | PIL. | |
| Polyisobutylene succinic anhydride | 11 | | PYS. | |
| Polymerized esters | 34 | | PYM. | |
| Polymethylene polyphenyl isocyanate | 12 | 2 | PPI. | |
| Polymethylsiloxane | 34 | | PMX. | |
| Polyolefin (molecular weight 300+) | 33 | | PMW | PLF |
| Polyolefin amide alkeneamine (C17+) | 33 | | POH | POD |
| *Polyolefin amide alkeneamine (C28+), see* Polyolefin amide alkenamine (C17+). | 33 | | POD | POH |
| Polyolefin amide alkeneamine borate (C28–C250) | 33 | | PAB. | |
| Polyolefin amide alkeneamine in mineral oil | 33 | | PLK. | |
| Polyolefin amide alkeneamine/Molybdenum oxysulfide mixture | 7 | | PMO. | |
| Polyolefin amide alkeneamine polyol | 20 | | PAP. | |
| Polyolefin amine (C17+) | 7 | | POG. | |
| Polyolefinamine (C28–C250) | 33 | | POM. | |
| Polyolefinamine in alkyl(C2–C4)benzenes | 32 | | POF | POR |
| Polyolefinamine in aromatic solvent | 32 | 3 | POR | POF |
| Polyolefin aminoester salts (MW 2000+) | 34 | | PAE. | |
| Polyolefin anhydride | 11 | | PAR. | |
| Polyolefin ester (C28–C250) | 34 | | POS. | |
| Polyolefin in mineral oil | 30 | | PLF | PMW |
| Polyolefin phenolic amine (C28–C250) | 9 | | PPH. | |
| Polyolefin phosphorosulfide, barium derivative (C28–C250) | 34 | | PPS. | |
| Poly (oxyalkylene) alkenyl ether (MW≤1000) | 41 | | PXY. | |
| Polyoxybutylene alcohol | 41 | | PXA. | |
| Poly(20)oxyethylene sorbitan monooleate | 34 | | PSM. | |
| Polyoxypropylenediamine (MW 2000) | 7 | | PYD. | |
| Poly(5+)propylene | 30 | | PLQ | PLP |
| Polypropylene glycol | 40 | 2 | PGC. | |
| *Polypropylene glycol methyl ether, see* Poly(2–8)alkylene glycol monoalkyl (C1–C6) ether. | 40 | | PGM | PAG |
| Polysiloxane | 34 | | PSX. | |
| Polysiloxane/White spirit, low (15–20%) aromatic | 34 | | PWS. | |
| *Poly(tetramethylene ether) glycols (mw 950–1050), see* alpha-hydro-omega-Hydroxytetradeca(oxytetramethylene). | 40 | | PYU | HTO |

TABLE I TO PART 150—ALPHABETICAL LIST OF CARGOES—Continued

| Chemical name | Group No. | Footnote | CHRIS Code | Related CHRIS codes |
|---|---|---|---|---|
| Polytetramethylene ether glycol | 40 | | PYT | HTO/PYU/PYS |
| *Poppy seed, see* Oil, edible: Poppy seed | 34 | | | OPS (VEO) |
| *Poppy, see* Oil, edible: Poppy | 34 | | | OPY (VEO) |
| Potassium chloride solution | 43 | | PCU | PCD/PSD |
| Potassium chloride solution (10% or more) | 43 | | PCS | PCD/PCU |
| Potassium chloride solution (less than 26%) | 43 | | PSD | CLM/DRL/PCS/PCU |
| Potassium formate solutions | 34 | | PFR. | |
| *Potassium hydroxide solution, see* Caustic potash solution | 5 | 2 | | CPS/PTH |
| Potassium oleate | 34 | | POE. | |
| Potassium polysulfide/Potassium thiosulfide solution (41% or less) | 0 | 1 | PYP | PSF/PTF |
| Potassium salt of polyolefin acid | 34 | | PSP. | |
| Potassium thiosulfate (50% or less) | 43 | | PTF. | |
| Propane | 31 | | PRP | LPG |
| n-Propanolamine | 8 | | PLA | MPA/PAX |
| 2-Propene-1-aminium, N,N-dimethyl-N–2-propenyl-, chloride, homopolymer solution. | 0 | 1, 3 | PLN. | |
| Propionaldehyde | 19 | | PAD. | |
| beta-Propiolactone | 18 | 3 | PLT. | |
| Propionic acid | 4 | | PNA. | |
| Propionic anhydride | 11 | | PAH. | |
| Propionitrile | 37 | | PCN. | |
| *n-Propoxypropanol, see* Propylene glycol monoalkyl ether | 40 | | PXP | PGE |
| n-Propyl acetate | 34 | | PAT | IAC |
| n-Propyl alcohol | 20 | 2 | PAL | IPA |
| n-Propyl chloride | 36 | | PRC. | |
| Propyl ether | 41 | | | IPE/PRE |
| n-Propylamine | 7 | | PRA | IPO/IPP/IPQ |
| *Propylbenzenes (all isomers), see* Alkyl(C3–C4)benzenes | 32 | | PBY | AKC (CUM/PBZ) |
| Propylene | 30 | | PPL. | |
| Propylene-butylene copolymer | 30 | | PBP. | |
| Propylene carbonate | 34 | | PLC. | |
| Propylene dimer | 30 | | PDR. | |
| Propylene glycol | 20 | 2 | PPG. | |
| *Propylene glycol n-butyl ether, see* Propylene glycol monoalkyl ether | 40 | | PGD | PGE |
| *Propylene glycol ethyl ether, see* Propylene glycol monoalkyl ether | 40 | | PGY | PGE |
| *Propylene glycol methyl ether, see* Propylene glycol monoalkyl ether | 40 | 2 | PME | PGE |
| Propylene glycol methyl ether acetate | 34 | 2 | PGN. | |
| Propylene glycol monoalkyl ether | 40 | | PGE. | |
| *Including:* | | | | |
| *n-Propoxypropanol* | 40 | | | |
| *Propylene glycol n-butyl ether* | 40 | | | |
| *Propylene glycol ethyl ether* | 40 | | | |
| *Propylene glycol methyl ether* | 40 | 2 | | |
| *Propylene glycol propyl ether* | 40 | | | |
| Propylene glycol phenyl ether | 40 | | PGP. | |
| *Propylene glycol propyl ether, see* Propylene glycol monoalkyl ether | 40 | | | PGE |
| Propylene oxide | 16 | | POX. | |
| Propylene tetramer | 30 | | PTT. | |
| Propylene trimer | 30 | | PTR. | |
| Propylene/Propane/MAPP gas mixture | 30 | 2 | PPM. | |
| *Pseudocumene, see* Trimethylbenzene (all isomers) | 32 | | | TMB/TMD/TME/TRE |
| Pyridine | 9 | | PRD. | |
| *Pyridine bases, see* Paraldehyde-Ammonia reaction product | 9 | | | PRB |
| Pyrolysis gasoline (containing Benzene) | 32 | 3 | PYG | GPY |
| *Rapeseed oil (low erucic acid containing less than 4% free fatty acids),* see Oil, edible: Rapeseed, (low erucic acid containing less than 4% free fatty acids). | 34 | 3 | | ORO (VEO) |
| *Rapeseed oil fatty acid methyl esters, see* Oil, misc: Rapeseed fatty acid methyl esters. | 34 | 3 | | RSO |
| *Rapeseed oil, see* Oil, edible: Rapeseed | 34 | | | ORO (VEO) |
| Refrigerant gases | 0 | 1 | RFG. | |
| *Resin oil, distilled, see* Oil, misc: Resin, distilled | 33 | 3 | | ORR (ORS) |
| *Rice bran oil, see* Oil, misc: Rice bran | 34 | | | ORB |
| Rosin soap (disproportionated) solution | 43 | | RSP. | |
| *Rosin, see* Oil, misc: Rosin | 33 | | | ORN |
| ROUNDUP | 7 | | RUP | GIO |
| *Rum, see* Alcoholic beverages | 20 | | | ABV |
| *Safflower oil, see* Oil, edible: Safflower | 34 | | | OSF (VEO) |
| Sewage sludge | 43 | | SWS. | |
| *Shea butter, see* Oil, edible: Shea butter | 34 | 3 | | OSH (VEO) |
| Silica slurry | 43 | | SLC. | |

TABLE I TO PART 150—ALPHABETICAL LIST OF CARGOES—Continued

| Chemical name | Group No. | Footnote | CHRIS Code | Related CHRIS codes |
|---|---|---|---|---|
| Siloxanes | 34 | | SLX. | |
| Sludge, treated | 43 | | SWA. | |
| Sodium acetate solutions | 34 | | SAN. | |
| Sodium acetate, Glycol, Water mixture (1% or less Sodium hydroxide) (if non-flammable or non-combustible). | 5 | 2 | SAY | SAO/SAP/SAQ/SAY |
| Sodium acetate, Glycol, Water mixture (containing Sodium hydroxide) | 5 | | SAQ | SAO/SAP/SAW/SAY |
| Sodium acetate, Glycol, Water mixture (not containing Sodium hydroxide). | 34 | 2 | SAW | SAO/SAP/SAQ/SAY |
| Sodium alkyl (C14–C17) sulfonates (60–65% solution) | 34 | | SSA | AKA/AKE/SSU |
| Sodium aluminate solution | 5 | | SAV | SAU |
| Sodium aluminate solution (45% or less) | 5 | | SAU | SAV |
| Sodium aluminosilicate slurry | 34 | | SLR. | |
| Sodium benzoate | 34 | | SBN | SBM |
| Sodium bicarbonate solution (less than 10%) | 34 | | SBC. | |
| Sodium borohydride (15% or less)/Sodium hydroxide solution | 5 | | SBX | CSS/SBH/SBI/SHD |
| Sodium bromide solution (less than 50%) | 43 | 3 | SBL | SBR |
| Sodium carbonate solutions | 5 | | SCE. | |
| Sodium chlorate solution (50% or less) | 0 | 1, 2 | SDD | SDC |
| Sodium cyanide solution | 5 | | SCO | SCN/SCS |
| Sodium dichromate solution (70% or less) | 0 | 1, 2 | SDL | SCR |
| *Sodium dimethyl naphthalene sulfonate solution, see* Dimethyl naphthalene sulfonic acid, sodium salt solution. | 34 | | | DNS |
| Sodium hydrogen sulfide (6% or less)/Sodium carbonate (3% or less) solution. | 0 | 1, 2 | SSS | SCE/SHW |
| Sodium hydrogen sulfite solution (45% or less) | 43 | | SHY | SHX |
| Sodium hydrosulfide solution (45% or less) | 5 | 2 | SHR. | |
| Sodium hydrosulfide/Ammonium sulfide solution | 5 | 2 | SSA | ASF/ASS |
| *Sodium hydroxide solution, see* Caustic soda solution | 5 | 2 | | CSS (SHD) |
| Sodium hypochlorite solution (15% or less) | 5 | | SHP | SHC/SHQ |
| Sodium hypochlorite solution (20% or less) | 5 | | SHQ | SHC/SHP |
| Sodium lignosulfonate solution | 43 | | SLG | LNL |
| Sodium long-chain alkyl salicylate (C13+) | 34 | | SLS. | |
| *Sodium 2-mercaptobenzothiazol solution, see* Mercaptobenzothiazol, sodium salt solution. | 5 | | | SMB |
| Sodium methoxide (25% in methanol) | 0 | 1 | SMO. | |
| Sodium methylate 21–30% in methanol | 0 | 1, 2 ,3 | SMT | SMS |
| *Sodium naphthalene sulfonate solution, see* Naphthalene sulfonic acid (40% or less), sodium salt solution (40% or less). | 34 | | SNS | NSA (NSB) |
| *Sodium naphthenate solution, see* Naphthenic acid, sodium salt solution. | 43 | | | NTS |
| Sodium nitrite solution | 5 | | SNI | SNT |
| *Sodium N-methyl dithio carbamate solution, see* Metam sodium solution. | 7 | | MSS | SMD |
| Sodium petroleum sulfonate | 34 | | SPS. | |
| Sodium poly(4+)acrylate solution | 43 | 2 | SOP | SOO |
| Sodium polyacrylate solution | 43 | 2 | SOO | SOP |
| *Sodium salt of Ferric hydroxyethylethylenediaminetriacetic acid solution, see* Ferric hydroxyethylethylenediaminetriacetic acid, trisodium salt solution. | 43 | | STA | FHX |
| Sodium silicate solution | 43 | 2 | SSN | SSC |
| Sodium sulfate solution | 34 | 3 | SST | SSO |
| Sodium sulfide solution (15% or less) | 43 | | SDR | SDS |
| Sodium sulfide/Hydrosulfide solution ($H_2S$ 15 ppm or less) | 0 | 1, 2 | SSH | SDS/SHR/SSI/SSJ |
| Sodium sulfide/Hydrosulfide solution ($H_2S$ greater than 15 ppm but less than 200 ppm). | 0 | 1, 2 | SSI | SDS/SHR/SSH/SSJ |
| Sodium sulfide/Hydrosulfide solution ($H_2S$ greater than 200 ppm) | 0 | 1, 2 | SSJ | SDS/SHR/SSH/SSI |
| Sodium sulfite solution (25% or less) | 43 | | SUP | SSF/SUS |
| Sodium tartrates/Sodium succinates solution | 43 | | STM. | |
| Sodium thiocyanate solution (56% or less) | 0 | 1, 2 | STS | SCY |
| Sorbitol solution | 20 | | SBU | SBT |
| *Soyabean fatty acid methyl ester, see* Oil, misc: Soyabean fatty acid methyl ester. | 34 | | | OST |
| Soyabean oil (expoxidized) | 34 | | OSC. | |
| *Soyabean oil, see* Oil, edible: Soyabean | 34 | 2 | | OSB (VEO) |
| *Stearic acid, see* Fatty acids (saturated, C14+) | 34 | | SRA | FAD (FAB/FAE/FDI/FDT) |
| Stearyl alcohol | 20 | | SYL | ALY/ASY |
| *Stoddard solvent, see* Naphtha: Stoddard solvent | 33 | | | NSS |
| Styrene monomer | 30 | | STY. | |
| Sulfohydrocarbon (C3–C88) | 33 | | SFO. | |
| Sulfohydrocarbon, long-chain (C18+) alkylamine mixture | 7 | | SFX. | |
| Sulfolane | 39 | | SFL. | |

TABLE I TO PART 150—ALPHABETICAL LIST OF CARGOES—Continued

| Chemical name | Group No. | Footnote | CHRIS Code | Related CHRIS codes |
|---|---|---|---|---|
| Sulfonated polyacrylate solution | 43 | 2 | SPA. | |
| Sulfur (molten) | 0 | 1, 2 | SXX. | |
| Sulfur dioxide | 0 | 1 | SFD. | |
| Sulfuric acid | 2 | 2 | SFA | SAC |
| Sulfuric acid, spent | 2 | 2 | SAC | SFA |
| Sulfurized fat (C14–C20) | 33 | | SFT. | |
| Sulfurized polyolefinamide | 10 | | SPY. | |
| Sulfurized polyolefinamide alkene(C28–C250) amine | 33 | | SPO. | |
| *Sunflower seed oil, see* Oil, edible: Sunflower seed | 34 | | | OSN (VEO) |
| *Sym-trichlorobenzene, see* 1,2,4-Trichlorobenzene | 36 | | | |
| *Tall oil, see* Oil, misc: Tall | 34 | | | OTL (OTI/OTJ) |
| *Tall oil fatty acid (resin acids less than 20%), see* Oil, misc: Tall oil fatty acid (resin less than 20%). | 34 | 2 | | OTK (OTT) |
| Tall oil fatty acid, barium salt | 0 | 1, 2 | TOB. | |
| Tall oil soap (crude) | 34 | | TOR | TOS |
| Tall oil soap (disproportionated) solution | 43 | | TOS. | |
| *Tall oil, crude, see* Oil, misc: Tall, crude | 34 | 2, 3 | | OTI (OTJ/OTL) |
| *Tall oil, distilled, see* Oil, misc: Tall, distilled | 34 | 3 | | OTJ (OTI/OTL) |
| *Tall oil, fatty acid, see* Oil, misc: Tall fatty acid | 34 | 2 | | OTT |
| *Tall oil, pitch, see* Oil, misc: Tall pitch | 34 | 3 | | OTP (OTI/OTJ/OTL) |
| Tallow | 34 | 2 | TLO. | |
| *Tallow alcohol, see* Alcohols (C13+) | 20 | 2 | TFA | ALY (ASY) |
| Tallow alkyl nitrile | 37 | | TAN. | |
| Tallow fatty acid | 34 | 2 | TFD. | |
| *Tallow fatty alcohol, see* Alcohols (C13+) | 20 | 2 | TFA | ALY |
| *TAME, see* tert-Amyl methyl ether | 41 | | | AYE |
| Tertiary butylphenols | 21 | | BLT | BTP |
| Tetrachloroethane | 36 | | TEC. | |
| *1,1,2,2-Tetrachloroethane, see* Tetrachloroethane | 36 | | TEC | TEE |
| *Tetradecanol, see* Alcohols (C13+) | 20 | | TTN | ALY |
| *Tetradecene, see* olefins or alpha-olefin entries | 30 | | | OAM/OFY/OFW/OFZ/TDD |
| *Tetradecylbenzene, see* Alkyl(C9+) benzenes | 32 | | TDB | AKB |
| Tetraethyl silicate monomer/oligomer (20% in ethanol) | 0 | 1, 3 | TSM. | |
| Tetraethylene glycol | 40 | | TTG. | |
| *Tetraethylene glycol methyl ether, see* Poly(2–8)alkylene glycol monoalkyl(C1–C6) ether. | 40 | | | PAG |
| Tetraethylenepentamine | 7 | 2 | TTP. | |
| Tetrahydrofuran | 41 | | THF. | |
| Tetrahydronaphthalene | 32 | | THN. | |
| Tetramethylbenzene (all isomers) | 32 | | TTC | TTB |
| *1,2,3,5-Tetramethylbenzene, see* Tetramethylbenzene (all isomers) | 32 | | TTB | TTC |
| *Tetrapropylbenzene, see* Alkyl(C9+)benzenes | 32 | | | AKB |
| *Tetrasodium salt of ethylenediaminetetraacetic acid solution, see* Ethylenediaminetetraacetic acid, tetrasodium salt solution. | 43 | | | EDS |
| Titanium dioxide slurry | 43 | | TDS. | |
| Titanium tetrachloride | 2 | | TTT. | |
| Toluene | 32 | 2 | TOL. | |
| Toluene diisocyanate | 12 | 2 | TDJ | TDI |
| Toluenediamine | 9 | | TDA. | |
| o-Toluidine | 9 | 2 | TLI | TOD/TOI |
| *Triarylphosphate, see* Triisopropylated phenyl phosphates | 34 | | TRA | TPL |
| Tributyl phosphate | 34 | | TBP. | |
| 1,2,3-Trichlorobenzene (molten) | 36 | 3 | TBZ | TCB |
| 1,2,4-Trichlorobenzene | 36 | | TCB | TBZ |
| *1,2,3-Trichlorobenzol, see* 1,2,3-Trichlorobenzene (molten) | 36 | | TBZ | TCB |
| 1,1,1-Trichloroethane | 36 | 2 | TCE | TCM |
| 1,1,2-Trichloroethane | 36 | | TCM | TCE |
| Trichloroethylene | 36 | 2 | TCL. | |
| 1,1,2-Trichloro-1,2,2-trifluoroethane | 36 | | TTF. | |
| Tricresyl phosphate (containing 1% or more ortho-isomer) | 34 | 3 | TCO | TCP/TCQ |
| Tricresyl phosphate (containing less than 1% ortho-isomer) | 34 | 3 | TCP | TCO/TCQ |
| 1,2,3-Trichloropropane | 36 | 2 | TCN. | |
| *Tridecane (all isomers), see* Alkanes (C10+) (all isomers) | 31 | | TRD | ALV (ALJ) |
| Tridecanoic acid | 34 | | TDO. | |
| *Tridecanol, see* Alcohols (C13+) | 20 | | TDN | ALY (ASK/ASY/AYK/LAL) |
| *Tridecene, see* Olefins (C13+, all isomers) | 30 | | TRD | OAM/OFY/OFW/OFZ/TDC |
| Tridecyl acetate | 34 | | TAE. | |
| *Tridecylbenzene, see* Alkyl(C9+) benzenes | 32 | | TRB | AKB |
| Triethanolamine | 8 | 2 | TEA. | |
| Triethylamine | 7 | | TEN. | |
| Triethylbenzene | 32 | | TEB. | |

TABLE I TO PART 150—ALPHABETICAL LIST OF CARGOES—Continued

| Chemical name | Group No. | Footnote | CHRIS Code | Related CHRIS codes |
|---|---|---|---|---|
| Triethylene glycol | 40 | | TEG. | |
| Triethylene glycol butyl ether mixture | 40 | | TBD. | |
| *Triethylene glycol butyl ether, see* Poly(2–8)alkylene glycol monoalkyl (C1–C6) ether. | 40 | | TBE | PAG |
| Triethylene glycol di-(2-ethylbutyrate) | 34 | | TGD. | |
| Triethylene glycol dibenzoate | 34 | | TGB. | |
| Triethylene glycol ether mixture | 40 | | TYM. | |
| *Triethylene glycol ethyl ether, see* Poly(2–8)alkylene glycol monoalkyl(C1–C6) ether. | 40 | | TGE | PAG |
| *Triethylene glycol methyl ether, see* Poly(2–8)alkylene glycol monoalkyl(C1–C6) ether. | 40 | | TGY | PAG |
| Triethylenetetramine | 7 | 2 | TET. | |
| Triethyl phosphate | 34 | | TPS. | |
| Triethyl phosphite | 34 | 2 | TPI. | |
| Triisobutylene | 30 | | TIB. | |
| Triisooctyl trimellitate | 34 | | TIS. | |
| Triisopropanolamine | 8 | | TIP. | |
| *Triisopropanolamine salt of 2,4-Dichlorophenoxyacetic acid solution, see* 2,4-Dichlorophenoxyacetic acid, Triisopropanolamine salt solution. | 43 | | | DTI |
| Triisopropylated phenyl phosphates | 34 | | TPL. | |
| Trimethylacetic acid | 4 | | TAA. | |
| Trimethylamine solution (30% or less) | 7 | | TMT | TMA |
| Trimethylbenzene (all isomers) | 32 | | TRE | TMB/TMD/TME |
| *Trimethyl nonanol, see* Dodecanol | 20 | | | DDN (ASK/ASY/LAL) |
| Trimethylol propane polyethoxylated | 20 | | TPR. | |
| Trimethyl phosphite | 34 | 2 | TPP. | |
| Trimethylhexamethylene diisocyanate (2,2,4- and 2,4,4-) | 12 | | THI. | |
| Trimethylhexamethylenediamine (2,2,4- and 2,4,4-) | 7 | | THA. | |
| 2,2,4-Trimethyl-1,3-pentanediol diisobutyrate | 34 | | TMQ. | |
| 2,2,4-Trimethyl-1,3-pentanediol-1-isobutyrate | 34 | | TMP. | |
| 2,2,4-Trimethyl-3-pentanol-1-isobutyrate | 34 | | TMR. | |
| Triphenylborane (10% or less)/Caustic soda solution | 5 | | TPB. | |
| 1,3,5-Trioxane | 41 | 2 | TRO. | |
| *Tripropylene, see* Propylene trimer | 30 | | | PTR |
| Tripropylene glycol | 40 | | TGC. | |
| *Tripropylene glycol methyl ether, see* Poly(2–8)alkylene glycol monoalkyl(C1–C6) ether. | 40 | | TGM | PAG |
| *Trisodium nitrilotriacetate solution, see* Nitrilotriacetic acid, trisodium salt solution. | 34 | | TSO | NCA (TSN) |
| Trisodium phosphate solution | 5 | | TSP. | |
| *Trisodium salt of N-(Hydroxyethyl)ethylenediaminetriacetic acid solution, see* N-(Hydroxyethyl)ethylenediaminetriacetic acid, trisodium salt solution. | 43 | | | HET |
| Trixylyl phosphate | 34 | | TRP. | |
| *Trixylenyl phosphate, see* Trixylyl phosphate | 34 | | | TRP |
| *Tung oil, see* Oil, misc: Tung | 34 | | | OTG |
| Turpentine | 30 | | TPT. | |
| Turpentine substitute, see White spirit (low (15–20%) aromatic) | 33 | | | WSL (WSP) |
| Ucarsol CR Solvent 302 SG | 8 | | UCS. | |
| *Undecane (all isomers), see* Alkanes (C10+) (all isomers) | 31 | | UDN | ALV (ALJ) |
| Undecanoic acid | 4 | | UDA. | |
| *Undecanol, see* Undecyl alcohol | 20 | | | UND (ALR) |
| Undecene | 30 | | UDD | UDC |
| 1-Undecene | 30 | | UDC | UDD |
| Undecyl alcohol | 20 | | UND | ALR |
| *Undecylbenzene, see* Alkyl(C9+) benzenes | 32 | | UDB | AKB |
| Urea solution | 43 | | USL | URE |
| Urea, Ammonium mono- and di-hydrogen phosphate/Potassium chloride solution. | 0 | 1 | UPX. | |
| Urea/Ammonium phosphate solution | 43 | | UAP. | |
| Urea/Ammonium nitrate solution (containing less than 1% free Ammonia). | 43 | 2 | UAU | ANU/UAS/UAT/UAV |
| Urea/Ammonium nitrate solution (containing 1% or more Ammonia) | 6 | | UAV | ANU/UAS/UAT/UAU |
| *Vacuum gas oil, see* oil misc: Vacuum gas oil | 33 | | OVC. | |
| Valeraldehyde (all isomers) | 19 | | VAK | IVA/VAL |
| Vanillin black liquor (free alkali content 3% or more) | 5 | | VBL. | |
| Vegetable acid oils, n.o.s. | 34 | | VAD. | |
| *Including:* | | | | |
| *Corn acid oil* | 34 | | | |
| *Cottonseed acid oil* | 34 | | | |

TABLE I TO PART 150—ALPHABETICAL LIST OF CARGOES—Continued

| Chemical name | Group No. | Footnote | CHRIS Code | Related CHRIS codes |
|---|---|---|---|---|
| *Dark mixed acid oil* | 34 | | | |
| *Groundnut acid oil* | 34 | | | |
| *Mixed acid oil* | 34 | | | |
| *Mixed general acid oil* | 34 | | | |
| *Mixed hard acid oil* | 34 | | | |
| *Mixed soft acid oil* | 34 | | | |
| *Rapeseed acid oil* | 34 | | | |
| *Safflower acid oil* | 34 | | | |
| *Soya acid oil* | 34 | | | |
| *Sunflower seed acid oil* | 34 | | | |
| Vegetable fatty acid distillates, n.o.s. | 34 | 3 | VFD. | |
| *Including:* | | | | |
| *Palm kernel fatty acid distillate* | *34* | | | |
| *Palm oil fatty acid distillate* | *34* | | | |
| *Tall fatty acid distillate* | *34* | | | |
| *Tall oil fatty acid distillate* | *34* | | | |
| Vegetable oils, n.o.s. | 34 | | VEO. | |
| *Including:* | | | | |
| *Beechnut oil* | 34 | | | |
| *Camelina oil* | 34 | | | |
| *Cashew nut shell* | 34 | | | |
| *Castor oil* | 34 | | | |
| *Cocoa butter* | 34 | | | |
| *Coconut oil* | 34 | *2* | | |
| *Corn oil* | 34 | | | |
| *Cotton seed oil* | 34 | | | |
| *Croton oil* | 34 | | | |
| *Grape seed oil* | 34 | | | |
| *Groundnut oil* | 34 | | | |
| *Hazelnut oil* | 34 | | | |
| *Illipe oil* | 34 | | | |
| *Jatropha oil* | 4 | | | |
| *Linseed oil* | 34 | | | |
| *Mango kernel oil* | 34 | | | |
| *Nutmeg butter* | 34 | | | |
| *Oiticica oil* | 34 | | | |
| *Olive oil* | 34 | | | |
| *Palm kernel oil* | 34 | | | |
| *Palm kernel olein* | 34 | | | |
| *Palm kernel stearin* | 34 | | | |
| *Palm mid fraction* | 34 | | | |
| *Palm, non-edible industrial grade* | 34 | | | |
| *Palm oil* | 34 | 2 | | |
| *Palm olein* | 34 | | | |
| *Palm stearin* | 34 | | | |
| *Peanut oil* | 34 | | | |
| *Peel oil (oranges and lemons)* | 34 | | | |
| *Perilla oil* | 34 | | | |
| *Pine oil* | 34 | | | |
| *Poppy seed oil* | 34 | | | |
| *Poppy oil* | 34 | | | |
| *Raisin seed oil* | 34 | | | |
| *Rapeseed oil* | 34 | | | |
| *Rapeseed (low erucic acid containing less than 4% free fatty acids).* | 34 | | | |
| *Resin, distilled* | 33 | | | |
| *Resin oil* | 33 | | | |
| *Rice bran oil* | 34 | | | |
| *Rosin oil* | 34 | | | |
| *Safflower oil* | 34 | | | |
| *Salad oil* | 34 | | | |
| *Sesame oil* | 34 | | | |
| *Shea butter* | 34 | | | |
| *Soyabean oil* | 34 | 2 | | |
| *Sunflower seed oil* | 34 | | | |
| *Tall* | 34 | | | |
| *Tall, crude* | 34 | | | |
| *Tall, distilled* | 34 | | | |
| *Tall, pitch* | 34 | | | |
| *Tucum oil* | 34 | | | |
| *Tung oil* | 34 | | | |

TABLE I TO PART 150—ALPHABETICAL LIST OF CARGOES—Continued

| Chemical name | Group No. | Footnote | CHRIS Code | Related CHRIS codes |
|---|---|---|---|---|
| *Walnut oil* | 34 | | | |
| Vegetable protein solution (hydrolyzed) | 43 | | VPS. | |
| Vinyl acetate | 13 | 2 | VAM. | |
| Vinyl chloride | 35 | | VCM. | |
| Vinyl ethyl ether | 13 | | VEE. | |
| Vinylidene chloride | 35 | | VCI. | |
| Vinyl neodecanoate | 13 | 2 | VND. | |
| Vinyltoluene | 13 | | VNT. | |
| Water | 43 | | WTR. | |
| Waxes: | | | | |
| | | | WAX. | |
| Candelilla | 34 | | WCD. | |
| Carnauba | 34 | | WCA. | |
| Paraffin | 31 | | WPF. | |
| Petroleum | 33 | | WPT. | |
| *White spirit, see* White spirit (low (15–20%) aromatic) | 33 | | WSP | WSL |
| White spirit (low (15–20%) aromatic) | 33 | | WSL | WSP |
| *Wine, see* Alcoholic beverages | 20 | | ABV. | |
| Wood lignin with Sodium acetate/oxalate | 0 | 1, 3 | WOL. | |
| Xylenes | 32 | 2 | XLX | XLM/XLO/XLP |
| Xylenes/Ethylbenzene (10% or more) mixture | 32 | | XEB. | |
| Xylenols | 21 | | XYL. | |
| Zinc alkaryl dithiophosphate (C7–C16) | 34 | | ZAD. | |
| Zinc alkenyl carboxamide | 10 | | ZAA | WSL |
| Zinc alkyl dithiophosphate (C3–C14) | 34 | | ZAP. | |
| *Zinc bromide/Calcium bromide solution, see* Drilling brine (containing Zinc salts). | 43 | | | DZB |

**Notes:**

1. Because of very high reactivity or unusual conditions of carriage or potential compatibility problems, this commodity is not assigned to a specific group in Figure 1 to 46 CFR part 150 (Compatibility Chart).
2. See Appendix I to 46 CFR part 150 (Exceptions to the Chart).
3. Entries which were added from the March 2012 Annex to the 2007 edition of the IBC Code.
4. *Italicized* words are not part of the cargo name but may be used in addition to the cargo name.

■ 5. Revise Table II to Part 150, as amended by the interim rule published on August 16, 2013 (78 FR 50148), effective January 16, 2017, as delayed at 79 FR 68132, November 14, 2014, to read as follows:

TABLE II TO PART 150—GROUPING OF CARGOES

0. UNASSIGNED CARGOES

Acetone cyanohydrin
Alkenoic acid, polyhydroxy ester borated
Alkyl benzene distillation bottoms
Alkyl (C11–C17) benzene sulfonic acid
Alkylbenzene sulfonic acid (less than 4%)
Alkyl (C18–C28) toluenesulfonic acid
Aluminum chloride/Hydrochloric acid solution
Aluminum chloride/Hydrogen chloride solution
Ammonium hydrogen phosphate solution
Ammonium nitrate solution (45% or less)
Ammonium nitrate solution (93% or less)
Ammonium thiocyanate/Ammonium thiosulfate solution
Argon, liquefied
Benzenesulfonyl chloride [1]
gamma-Butyrolactone [1]
Carbon dioxide (high purity)
Carbon dioxide (reclaimed quality)
Carbon dioxide, liquefied
Chlorine
2-Chloro-4-ethylamino-6-isopropylamino-5-triazine solution
Chlorosulfonic acid
Decyloxytetrahydrothiophene dioxide
2,4-Dichlorophenoxyacetic acid, Dimethylamine salt solution (70% or less) [1]
Dimethylamine salt of 2,4-Dichlorophenoxyacetic acid solution [1]
Dimethyl disulfide
Diphenylol propane-Epichlorohydrin resins
tert-Dodecanethiol [1]
Dodecyl hydroxypropyl sulfide [1]
Dodecylbenzenesulfonic acid [1]

TABLE II TO PART 150—GROUPING OF CARGOES—Continued

| 0. UNASSIGNED CARGOES |
|---|
| Ethylene oxide |
| Fuming sulfuric acid |
| Hydrogen peroxide solutions (over 60% but not over 70% by mass) |
| Hydrogen peroxide solutions (over 8% but not over 60% by mass) |
| Hydrogenated starch hydrolysate |
| Lactic acid [1] |
| Liquid chemical wastes |
| Long-chain alkaryl sulfonic acid (C16–C60) [1] |
| Magnesium chloride solution [1] |
| Maltitol solution |
| Methylcyclopentadienyl manganese tricarbonyl |
| Methylcyclopentadienyl manganese tricarbonyl (60–70%) in mineral oil |
| Molasses residue (from fermentation) |
| Molybdenum polysulfide long-chain alkyl dithiocarbamide complex |
| Motor fuel anti-knock compound (containing lead alkyls) |
| Naphthalene sulfonic acid-formaldehyde copolymer, sodium salt solution |
| NIAX POLYOL APP 240C [1] |
| Nitrating acid (mixture of Sulfuric and Nitric acids) |
| Nitric acid (70% and over) [1] |
| Nitric Acid, fuming |
| Nitric Acid, red fuming |
| Nitrogen |
| o-Nitrophenol (molten) [1] |
| Non-noxious Liquid Substance, (12) n.o.s. Cat OS |
| Noxious Liquid Substance, NF, (1) n.o.s. Cat X |
| Noxious Liquid Substance, F, (2) n.o.s. Cat X |
| Noxious Liquid Substance, NF, (3) n.o.s. Cat X |
| Noxious Liquid Substance, F, (4) n.o.s. Cat X |
| Noxious Liquid Substance, NF, (5) n.o.s. Cat Y |
| Noxious Liquid Substance, F, (6) n.o.s. Cat Y |
| Noxious Liquid Substance, NF, (7) n.o.s. Cat Y |
| Noxious Liquid Substance, F, (8) n.o.s. Cat Y |
| Noxious Liquid Substance, NF, (9) n.o.s. Cat Z |
| Noxious Liquid Substance, F, (10) n.o.s. Cat Z |
| Noxious Liquid Substance, (11) n.o.s. Cat Z |
| n-Octyl Mercaptan |
| Oleum [1] |
| Orange juice (concentrated) |
| Orange juice (not concentrated) |
| Oxygenated aliphatic hydrocarbon mixture |
| Phosphorus, yellow or white |
| Phosphosulfurized bicycle terpene |
| Phthalate based polyester polyol [1] |
| Potassium polysulfide/Potassium thiosulfide solution (41% or less) |
| 2-Propene-1-aminium, N,N-dimethyl-N–2-propenyl-, chloride, homopolymer solution |
| Refrigerant gases |
| Sodium chlorate solution (50% or less) [1] |
| Sodium dichromate solution (70% or less) [1] |
| Sodium hydrogen sulfide (6% or less)/Sodium carbonate (3% or less) solution [1] |
| Sodium methoxide (25% in methanol) |
| Sodium methylate 21–30% in methanol |
| Sodium sulfide/Hydrosulfide solution ($H_2S$ 15 ppm or less) |
| Sodium sulfide/Hydrosulfide solution ($H_2S$ greater than 15 ppm but less than 200 ppm) [1] |
| Sodium sulfide/Hydrosulfide solution ($H_2S$ greater than 200 ppm) |
| Sodium thiocyanate solution (56% or less) [1] |
| Sulfur (molten) |
| Sulfur dioxide |
| Tall oil fatty acid, barium salt [1] |
| Tetraethyl silicate monomer/oligomer (20% in ethanol) |
| Urea, Ammonium mono- and di-hydrogen phosphate/Potassium chloride solution |
| Wood lignin with Sodium acetate/oxalate |
| 1. NON–OXIDIZING MINERAL ACIDS |
| Di-(2-ethylhexyl) phosphoric acid |
| Ferric chloride solution |
| Fluorosilicic acid (20–30%) in water solution |
| Fluorosilicic acid (30% or less) |
| Hydrochloric acid |
| Hydrofluorosilicic acid, (25% or less) |
| Phosphoric acid |
| Polyaluminum chloride solution |
| 2. SULFURIC ACIDS |
| Sulfuric acid [1] |

TABLE II TO PART 150—GROUPING OF CARGOES—Continued

| 0. UNASSIGNED CARGOES |
|---|
| Sulfuric acid, spent |
| Titanium tetrachloride |
| 3. NITRIC ACID |
| Ferric nitrate/Nitric acid solution |
| Nitric acid (less than 70%) |
| 4. ORGANIC ACIDS |
| Acetic acid [1] |
| Acrylic acid [1] |
| Butyric acid |
| Chloroacetic acid (80% or less) |
| 2- or 3-Chloropropionic acid |
| Citric acid (70% or less) |
| Decanoic acid |
| 2,2-Dichloropropionic acid |
| Dimethyl octanoic acid |
| 2-Ethylhexanoic acid |
| Formic acid [1] |
| Formic acid (85% or less) |
| Formic acid (over 85%) |
| Formic acid mixture (containing up to 18% Propionic acid and up to 25% Sodium formate) |
| Glycolic acid solution (70% or less) |
| Glyoxylic acid solution (50% or less) |
| n-Heptanoic acid |
| 1,6-Hexanediol, distillation overheads |
| Hexanoic acid |
| 2-Hydroxy-4-(methylthio)butanoic acid |
| Jatropha oil |
| Long-chain alkyl (C13+) salicylic acid |
| Methacrylic acid |
| Naphthenic acid |
| Neodecanoic acid |
| Nonanoic acid (all isomers) |
| Nonanoic/Tridecanoic acid mixture |
| Octanoic acid (all isomers) |
| Oleic acid |
| Pentanoic acid |
| n-Pentanoic acid (64%)/2-Methyl butryic acid (36%) mixture |
| Propionic acid |
| Trimethylacetic acid |
| Undecanoic acid |
| 5. CAUSTICS |
| Aluminum hydroxide/sodium hydroxide/sodium carbonate solution (40% or less) |
| Ammonium sulfide solution (45% or less) |
| Calcium hydroxide slurry |
| Calcium hypochlorite solution (15% or less) |
| Calcium hypochlorite solution (more than 15%) |
| Caustic potash solution [1] |
| Caustic soda solution [1] |
| Cresylate spent caustic |
| Cresylic acid, sodium salt solution |
| 1,4-Dihydro-9,10-dihydroxy anthracene, disodium salt solution |
| Kraft black liquor |
| Kraft pulping liquors (free alkali content 3% or more) (Black, Green, or White) |
| Magnesium hydroxide slurry |
| Mercaptobenzothiazol, sodium salt solution |
| 2-Mercaptobenzothiazol (in liquid mixture) |
| Potassium hydroxide solution [1] |
| Sodium acetate, Glycol, Water mixture (1% or less Sodium hydroxide) (if non-flammable or non-combustible) |
| Sodium acetate, Glycol, Water mixture (containing Sodium hydroxide) |
| Sodium aluminate solution |
| Sodium aluminate solution (45% or less) |
| Sodium borohydride (15% or less)/Sodium hydroxide solution |
| Sodium carbonate solutions |
| Sodium cyanide solution |
| Sodium hydrosulfide solution (45% or less) [1] |
| Sodium hydrosulfide/Ammonium sulfide solution [1] |
| Sodium hydroxide solution [1] |
| Sodium hypochlorite solution (15% or less) |
| Sodium hypochlorite solution (20% or less) |
| Sodium 2-mercaptobenzothiazol solution |
| Sodium nitrite solution |
| Triphenylborane (10% or less)/Caustic soda solution |

TABLE II TO PART 150—GROUPING OF CARGOES—Continued

| 0. UNASSIGNED CARGOES |
|---|
| Trisodium phosphate solution |
| Vanillin black liquor (free alkali content 3% or more) |
| 6. AMMONIA |
| Ammonia, anhydrous |
| Ammonia, aqueous (28% or less Ammonia) |
| Ammonium hydroxide (28% or less Ammonia) |
| Ammonium nitrate/Urea solution (containing Ammonia) |
| Urea/Ammonium nitrate solution (containing 1% or more Ammonia) |
| 7. ALIPHATIC AMINES |
| Alkyl amine (C17+) |
| Alkyl (C12+) dimethylamine |
| N-Aminoethylpiperazine |
| Butylamine (all isomers) |
| Crude piperazine |
| Cyclohexylamine |
| Dibutylamine |
| Diethylamine [1] |
| Diethylenetriamine [1] |
| Diisobutylamine |
| Diisopropylamine |
| Dimethylamine |
| Dimethylamine solution (45% or less) |
| Dimethylamine solution (greater than 45% but not greater than 55%) |
| Dimethylamine solution (greater than 55% but not greater than 65%) |
| N,N-Dimethylcyclohexylamine |
| Dimethyldodecylamine |
| N,N-Dimethyldodecylamine |
| Di-n-propylamine |
| Dodecylamine/Tetradecylamine mixture |
| Dodecyldimethylamine/Tetradecyldimethylamine mixture |
| Ethoxylated tallow alkyl amine |
| Ethoxylated tallow alkyl amine, glycol mixture |
| Ethoxylated tallow amine (≤95%) |
| Ethylamine [1] |
| Ethylamine solution (72% or less) |
| N-Ethylbutylamine |
| N-ethylcyclohexylamine |
| Ethyleneamine EA 1302 [1] |
| Ethylenediamine [1] |
| 2-Ethylhexylamine |
| N-ethylmethylallylamine |
| Glycine, sodium salt solution |
| Glyphosate solution (not containing surfactant) |
| Hexamethylenediamine (molten) |
| Hexamethylenediamine solution |
| Hexamethyleneimine |
| Hexamethylenetetramine solutions |
| bis (Hydrogenated tallow alkyl) methyl amines |
| Isophorone diamine |
| Isopropylamine |
| Isopropylamine (70% or less) solution |
| iso-Propylamine solution |
| Long-chain alkyl amine |
| Long-chain polyetheramine in alkyl(C2–C4)benzenes |
| Metam sodium solution |
| Methylamine solutions (42% or less) |
| 2-Methyl-1,5-pentanediamine |
| Monoethylamine |
| Morpholine [1] |
| Oleylamine |
| Pentaethylenehexamine |
| Pentaethylenehexamine/Tetraethylenepentamine mixture |
| Phosphate esters, alkyl(C12–C14)amine |
| Piperazine (70% or less) |
| Piperazine (crude) |
| Piperazine, 68% solution |
| Polyalkenyl succinic anhydride amine |
| Polyethylene polyamines [1] |
| Polyethylene polyamines (more than 50% C5–C20 Paraffin oil) |
| Poly(iminoethylene)-graft-N-poly(ethyleneoxy) solution (90% or less) |
| Polyisobutenamine in aliphatic (C10–C14) solvent |
| Polyolefin amide alkeneamine/Molybdenum oxysulfide mixture |

TABLE II TO PART 150—GROUPING OF CARGOES—Continued

| 0. UNASSIGNED CARGOES |
|---|
| Polyolefin amine (C17+) |
| Polyoxypropylenediamine (MW 2000) |
| n-Propylamine |
| ROUNDUP |
| Sodium N-methyl dithio carbamate solution |
| Sulfohydrocarbon, long-chain (C18+) alkylamine mixture |
| Tetraethylenepentamine [1] |
| Triethylamine |
| Triethylenetetramine [1] |
| Trimethylamine solution (30% or less) |
| Trimethylhexamethylenediamine (2,2,4- and 2,4,4-) |
| 8. ALKANOLAMINES |
| Alkyl (C12–C16) propoxyamine ethoxylates |
| Aminoethyldiethanolamine/Aminoethylethanolamine solution |
| 2-(2-Aminoethoxy)ethanol |
| Aminoethylethanolamine |
| 2-Amino-2-methyl-1-propanol |
| Diethanolamine |
| Diethylaminoethanol |
| Diethylethanolamine |
| Diisopropanolamine |
| Dimethylethanolamine [1] |
| Ethanolamine |
| Ethoxylated alkyloxy alkyl amine |
| Ethoxylated long-chain (C16+) alkyloxyalkylamine |
| Isopropanolamine |
| Isopropanolamine solution |
| iso-Propanolamine |
| Linear alkyl (C12–C16) propoxyamine ethoxylates |
| Methyl diethanolamine |
| Monoethanolamine |
| Monoisopropanolamine |
| n-Propanolamine |
| Triethanolamine |
| Triisopropanolamine |
| Ucarsol CR Solvent 302 SG |
| 9. AROMATIC AMINES |
| Alkyl (C8–C9) phenylamine in aromatic solvents |
| Amine C–6, morpholine process residue |
| Aniline |
| Calcium long-chain alkyl phenolic amine (C8–C40) |
| 4-Chloro-2-methylphenoxyacetic acid, Dimethylamine salt solution |
| Dialkyl (C8–C9) diphenylamines |
| 2,6-Diethylaniline |
| Dimethylamine salt of 4-Chloro-2-methylphenoxyacetic acid solution |
| 2,6-Dimethylaniline |
| Diphenylamine (molten) |
| Diphenylamine, reaction product with 2,2,4-trimethylpentene |
| Diphenylamines, alkylated |
| 2-Ethyl-6-methyl-N-(1′-methyl-2-methoxyethyl)aniline |
| N-Methylaniline |
| 2-Methyl-6-ethyl aniline |
| N-Methyl-5-ethylpyridine |
| Methylpyridine |
| 2-Methylpyridine |
| 3-Methylpyridine |
| 4-Methylpyridine |
| N-Methyl-2-pyrrolidone [1] |
| Paraldehyde-Ammonia reaction product |
| Polyolefin phenolic amine (C28–C250) |
| Pyridine |
| Pyridine bases |
| Toluenediamine |
| o-Toluidine |
| 10. AMIDES |
| Acetochlor |
| Acrylamide solution (50% or less) |
| Alkenyl (C11+) amide |
| N,N-Dimethylacetamide |
| N,N-Dimethylacetamide solution (40% or less) |
| Dimethylformamide |
| Formamide |

TABLE II TO PART 150—GROUPING OF CARGOES—Continued

| 0. UNASSIGNED CARGOES |
|---|
| N,N-bis(2-Hydroxyethyl) oleamide |
| Octadecenoamide solution |
| Oleamide solution |
| Organomolybdenum amide |
| Polyalkyl alkenamine succinimide, molybdenum oxysulfide |
| Polybutenyl succinimide |
| Polyisobutenyl succinimide |
| Sulfurized polyolefinamide |
| Zinc alkenyl carboxamide |
| 11. ORGANIC ANHYDRIDES |
| Acetic anhydride |
| Alkenyl (C16–C20) succinic anhydride |
| Alkyl succinic anhydride |
| Maleic anhydride |
| Maleic anhydride/sodium allylsulphonate copolymer solution |
| Phthalic anhydride (molten) |
| Polyisobutenyl anhydride adduct |
| Polyisobutylene succinic anhydride |
| Polyolefin anhydride |
| Propionic anhydride |
| 12. ISOCYANATES |
| Diphenylmethane diisocyanate |
| Hexamethylene diisocyanate |
| Isophorone diisocyanate |
| Polymethylene polyphenyl isocyanate |
| Toluene diisocyanate |
| Trimethylhexamethylene diisocyanate (2,2,4- and 2,4,4-) |
| 13. VINYL ACETATE |
| Vinyl acetate |
| Vinyl ethyl ether |
| Vinyl neodecanoate |
| Vinyltoluene |
| 14. ACRYLATES |
| Butyl acrylate (all isomers) |
| Butyl methacrylate |
| Butyl methacrylate, Decyl methacrylate, Cetyl-Eicosyl methacrylate mixture |
| Butyl/Decyl/Cetyl/Eicosyl methacrylate mixture |
| Cetyl/Eicosyl methacrylate mixture |
| Decyl acrylate |
| Dodecyl methacrylate |
| Dodecyl/Octadecyl methacrylate mixture |
| Dodecyl/Pentadecyl methacrylate mixture |
| Ethyl acrylate |
| 2-Ethylhexyl acrylate |
| Ethyl methacrylate |
| 2-Hydroxyethyl acrylate [1] |
| Isobutyl methacrylate |
| Methacrylic resin in ethylene dichloride |
| Methyl acrylate |
| Methyl methacrylate |
| Nonyl methacrylate monomer |
| Polyalkyl acrylate |
| Polyalkyl(C18–C22) acrylate in Xylene |
| Polyalkyl (C10–C20) methacrylate |
| Polyalkyl methacrylate in mineral oil |
| Polyalkyl(C10–C18)methacrylate/Ethylene propylene copolymer mixture |
| 15. SUBSTITUTED ALLYLS |
| Acrylonitrile [1] |
| Allyl alcohol [1] |
| Allyl chloride |
| Dichloropropene (all isomers) |
| 1,3-Dichloropropene |
| Dichloropropene/Dichloropropane mixtures |
| Methacrylonitrile |
| 16. ALKYLENE OXIDES |
| Brominated Epoxy Resin in Acetone |
| 1,2-Butylene oxide |
| Diglycidyl ether of Bisphenol A |
| Diglycidyl ether of Bisphenol F |
| Epoxy resin |
| Ethylene oxide/Propylene oxide mixture |
| Ethylene oxide/Propylene oxide mixture with an Ethylene oxide content not more than 30% by mass |

TABLE II TO PART 150—GROUPING OF CARGOES—Continued

| 0. UNASSIGNED CARGOES |
|---|
| Propylene oxide |
| 17. EPICHLOROHYDRIN |
| Chlorohydrins |
| Chlorohydrins (crude) |
| Epichlorohydrin |
| 18. KETONES |
| Acetone [1] |
| Acetophenone |
| Amyl methyl ketone |
| 2-Butanone |
| Butyl heptyl ketone |
| Butyl methyl ketone |
| Camphor oil (light) |
| 1-(4-Chlorophenyl)-4,4-dimethyl pentan-3-one [1] |
| Cyclohexanone |
| Cyclohexanone/Cyclohexanol mixtures |
| Diisobutyl ketone |
| Ethyl amyl ketone |
| Isophorone |
| Ketone residue |
| Mesityl oxide [1] |
| Methyl amyl ketone |
| Methyl butyl ketone |
| Methyl ethyl ketone [1] |
| Methyl heptyl ketone |
| Methyl isoamyl ketone |
| Methyl isobutyl ketone [1] |
| Methyl propyl ketone |
| beta-Propiolactone |
| 19. ALDEHYDES |
| Acetaldehyde |
| Acrolein [1] |
| Butyraldehyde (all isomers) |
| Crotonaldehyde [1] |
| Crude isononylaldehyde |
| Decaldehyde |
| 2-Ethylhexaldehyde |
| 2-Ethyl-3-propylacrolein [1] |
| Formaldehyde (50% or more)/Methanol mixtures [1] |
| Formaldehyde solutions (37%—50%) [1] |
| Formaldehyde solutions (45% or less) [1] |
| Furfural |
| Glutaraldehyde solutions (50% or less) |
| Glyoxal solution (40% or less) |
| Isononylaldehyde (crude) |
| 3-Methyl butyraldehyde |
| Methylolureas |
| 3-(Methylthio)propionaldehyde |
| Octyl aldehydes |
| Paraldehyde |
| Pentyl aldehyde |
| Propionaldehyde |
| Valeraldehyde (all isomers) |
| 20. ALCOHOLS, GLYCOLS |
| Acrylonitrile-Styrene copolymer dispersion in Polyether polyol |
| Alcohol (C9–C11) poly (2.5–9) ethoxylates |
| Alcohol (C6–C17) (secondary) poly (3–6) ethoxylates |
| Alcohol (C6–C17) (secondary) poly (7–12) ethoxylates |
| Alcohol (C12–C16) poly (1–6) ethoxylates |
| Alcohol (C12–C16) poly (7–19) ethoxylates |
| Alcohol (C12–C16) poly (20+) ethoxylates |
| Alcohol (C12–C15) poly (. . .) ethoxylates |
| Alcohol polyethoxylates |
| Alcohol polyethoxylates, secondary |
| Alcoholic beverages, n.o.s. |
| Alcohols (C12+), primary, linear |
| Alcohols (C8–C11), primary, linear and essentially linear |
| Alcohols (C12–C13), primary, linear and essentially linear |
| Alcohols (C14–C18), primary, linear and essentially linear |
| Alcohols (C13+) |
| Cetyl Alcohol (hexadecanol) |
| Oleyl Alcohol (octadecenol) |

TABLE II TO PART 150—GROUPING OF CARGOES—Continued

| 0. UNASSIGNED CARGOES |
|---|
| Pentadecanol |
| Tallow alcohol |
| Tetradecanol |
| Tridecanol |
| Amyl alcohol, primary |
| n-Amyl alcohol |
| sec-Amyl alcohol |
| tert-Amyl alcohol |
| Behenyl alcohol |
| Bio-fuel blends of Gasoline and Ethyl alcohol (≤25% but <99% by volume) |
| Brake fluid base mix: Poly (2–8) alkylene (C2–C3) glycols/Polyalkylene (C2–C10) glycols monoalkyl (C1–C4) ethers and their borate esters |
| 1,4-Butanediol |
| 2-Butoxyethanol (58%)/Hyperbranched polyesteramide (42%) (mixture) |
| Butyl alcohol (all isomers) [1] |
| Butyl alcohol (iso-, n-, sec-, tert-) |
| Butylene glycol |
| Cetyl/Stearyl alcohol |
| Choline chloride solutions |
| Crude isopropanol |
| Cyclohexanol |
| Decyl alcohol (all isomers) [1] |
| Decyl/Dodecyl/Tetradecyl alcohol mixture |
| Diacetone alcohol [1] |
| Dibutyl carbinol |
| Diethyl hexanol |
| Diisobutyl carbinol |
| 2,2-Dimethylpropane-1,3-diol (molten or solution) |
| Dodecanol (all isomers) |
| Dodecyl alcohol (all isomers) |
| Ethoxylated alcohols , C11–C15 |
| 2-Ethylhexanol |
| Ethyl alcohol [1] |
| Ethyl butanol |
| Ethylene chlorohydrin |
| Ethylene cyanohydrin |
| Ethylene glycol [1] |
| Furfuryl alcohol [1] |
| Glycerine [1] |
| Glycerine (83%)/Dioxanedimethanol (17%) mixture |
| Glycerol |
| Glycerol monooleate |
| Glycol mixture, crude |
| Heptanol (all isomers) |
| Hexadecanol (cetyl alcohol) |
| Hexaethylene glycol |
| Hexamethylene glycol |
| Hexanol |
| Hexylene glycol |
| Isoamyl alcohol |
| Isobutyl alcohol |
| Isopropyl alcohol |
| Methacrylic acid—Alkoxypoly (alkylene oxide) methacrylate copolymer, sodium salt aqueous solution (45% or less) |
| 3-Methoxy-1-butanol |
| Methyl alcohol [1] |
| Methyl amyl alcohol |
| alpha-Methylbenzyl alcohol with Acetophenone (15% or less) |
| Methyl butanol |
| Methyl butenol |
| Methyl 3- (3,5 di-tert-butyl-4-hydroxyphenyl) propionate crude melt |
| Methylbutynol |
| Methylcyclohexanemethanol (crude) |
| 2-Methyl-2-hydroxy-3-butyne |
| Methyl isobutyl carbinol |
| 3-Methyl-3-methoxybutanol |
| 2-Methyl-1,3-propanediol |
| Molasses |
| Nonyl alcohol (all isomers) [1] |
| 1-Octadecanol |
| Octadecenol (oleyl alcohol) |
| Octanol (all isomers) [1] |
| Octyl alcohol [1] |
| Pentacosa (oxypropane-2,3-diyl)s |

TABLE II TO PART 150—GROUPING OF CARGOES—Continued

| 0. UNASSIGNED CARGOES |
|---|
| Pentaethylene glycol |
| Polyalkylene oxide polyol |
| Polybutadiene, hydroxyl terminated |
| Polyglycerine/Sodium salts solution (containing less than 3% Sodium hydroxide)[1] |
| Polyglycerol |
| Polyolefin amide alkeneamine polyol |
| n-Propyl alcohol [1] |
| Propylene glycol [1] |
| Rum |
| Sorbitol solution |
| Stearyl alcohol |
| Tallow alcohol |
| Tallow fatty alcohol (C13+) |
| Trimethyl nonanol |
| Trimethylol propane polyethoxylated |
| Undecanol |
| Undecyl alcohol |
| Wine |
| 21. PHENOLS, CRESOLS |
| Alkyl (C4–C9) phenols |
| Alkylated (C4–C9) hindered phenols |
| Benzyl alcohol |
| Carbolic oil |
| Creosote [1] |
| Creosote (coal tar) |
| Creosote (wood tar) |
| Cresols (all isomers) |
| Cresols with 5% or more Phenol |
| Cresols with less than 5% Phenol |
| Cresylic acid |
| Cresylic acid, dephenolized |
| Cresylic acid tar |
| Cresylic acid with 5% or more phenol |
| Dibutylphenols |
| Di-tert-butylphenol |
| 2,4-Di-tert-butylphenol |
| 2,6-Di-tert-butylphenol |
| 2,4-Dichlorophenol |
| Dodecyl phenol |
| o-Ethyl phenol |
| Long-chain alkylphenate/Phenol sulfide mixture |
| Methylene bridged isobutylenated phenols |
| Nonyl phenol |
| Nonylphenol (48–62%)/Phenol (42–48%)/Dinonylphenol (1–10%) mixture |
| Octyl phenol |
| Phenol |
| Tertiary butylphenols |
| Xylenols |
| 22. CAPROLACTAM SOLUTIONS |
| Caprolactam solution |
| epsilon-Caprolactam (molten or aqueous solutions) |
| 23–29. UNASSIGNED |
| 30. OLEFINS |
| Acrylic acid/ethenesulfonic acid copolymer with phosphonate groups, sodium salt solution |
| Amylene |
| tert-Amylenes |
| Aryl polyolefin (C11–C50) |
| Butadiene (all isomers) |
| Butadiene/Butylene mixtures (containing Acetylenes) |
| Butene oligomer |
| Butene |
| Butylenes (all isomers) |
| 1,5,9-Cyclododecatriene |
| Cyclopentadiene/Styrene/Benzene mixture |
| 1,3-Cyclopentadiene dimer (molten) |
| Cyclopentene |
| Decene |
| Dicyclopentadiene, Resin Grade, 81–89% |
| Dicyclopentadiene |
| Diisobutylene |
| Dipentene |
| Dodecene (all isomers) |

TABLE II TO PART 150—GROUPING OF CARGOES—Continued

| 0. UNASSIGNED CARGOES |
|---|
| Ethylene |
| Ethylidene norbornene [1] |
| Heptene (all isomers) |
| Hexene (all isomers) |
| Isoprene (all isomers) |
| Isoprene (part refined) |
| Isoprene concentrate (Shell) |
| Latex, ammonia (1% or less)- inhibited |
| d-Limonene |
| Methyl acetylene/Propadiene mixture |
| Methyl butenes |
| Methylcyclopentadiene dimer |
| 4-Methyl-1-pentene |
| 2-Methyl-1-pentene |
| alpha-Methylstyrene |
| Mixed C4 Cargoes |
| Myrcene |
| Nonene (all isomers) |
| 1-Octadecene |
| Octene (all isomers) |
| Olefin-Alkyl ester copolymer (molecular weight 2000+) |
| Olefin mixture (C7–C9) C8 rich, stabilized |
| Olefin mixtures (C5–C7) |
| Olefin mixtures (C5–C15) |
| Olefins (C13+, all isomers) |
| alpha-Olefins (C6–C18) mixtures |
| 1,3-Pentadiene |
| 1,3-Pentadiene (greater than 50%), Cyclopentene and isomers, mixtures |
| Pentene (all isomers) |
| PIB |
| alpha-Pinene |
| beta-Pinene |
| Piperylene concentrate |
| Poly (4+) isobutylene |
| Polyolefin in mineral oil |
| Poly (5+) propylene |
| Propylene |
| Propylene-butylene copolymer |
| Propylene dimer |
| Propylene tetramer |
| Propylene trimer |
| Propylene/Propane/MAPP gas mixture |
| Styrene monomer |
| Tetradecene |
| Tridecene |
| Triisobutylene |
| Tripropylene |
| Turpentine |
| Undecene |
| 1-Undecene |
| 31. PARAFFINS |
| Alkanes (C10–C26), linear and branched (flash point >60 °C) |
| Alkanes (C6–C9) |
| n-Alkanes (C10+) (all isomers) |
| iso-& cyclo-Alkanes (C10–C11) |
| iso-& cyclo-Alkanes (C12+) |
| Butane (all isomers) |
| Butane/Propane mixture |
| Cycloheptane |
| Cyclohexane |
| Cyclopentane |
| Decane (all isomers) |
| Dodecane (all isomers) |
| Ethane |
| Ethyl cyclohexane |
| Ethylene-Propylene copolymer (in liquid mixtures) |
| Heptadecane (all isomers) |
| Heptane (all isomers) |
| Hexane [1] (all isomers) |
| Hydroxy terminated polybutadiene |
| iso-Propyl cyclohexane |
| Isopropylcyclohexane |

TABLE II TO PART 150—GROUPING OF CARGOES—Continued

| 0. UNASSIGNED CARGOES |
|---|
| Liquefied Natural Gas |
| Methane |
| Methylcyclohexane |
| 2-Methyl pentane |
| Nonane (all isomers) |
| Octane (all isomers) |
| Paraffin wax |
| n-Paraffins (C10–C20) |
| Pentane (all isomers) |
| Polyalpha olefins |
| Propane |
| Tridecane (all isomers) |
| Undecane (all isomers) |
| 32. AROMATIC HYDROCARBONS |
| Alkyl acrylate-Vinyl pyridine copolymer in Toluene |
| Alkyl (C3–C4) benzenes |
| Butylbenzenes |
| Cumene |
| Propylbenzene |
| Alkyl (C5–C8) benzenes |
| Amylbenzenes |
| Heptylbenzenes |
| Hexylbenzenes |
| Octylbenzenes |
| Alkyl (C9+) benzenes |
| Decylbenzenes |
| Dodecylbenzenes |
| Nonylbezenes |
| Tetradecylbenzenes |
| Tetrapropylbenzenes |
| Tridecylbenzenes |
| Undecylbenzenes |
| Alkylbenzene mixtures (containing at least 50% of Toluene) |
| Alkylbenzene, Alkylindane, Alkylindene mixture (each C12–C17) |
| Alkyl toluene |
| Alkyl (C18+) toluenes |
| Benzene |
| Benzene and mixtures having 10% Benzene or more |
| Benzene hydrocarbon mixtures (containing Acetylenes) (having 10% Benzene or more) |
| Benzene/Toluene/Xylene mixtures (having 10% Benzene or more) |
| Butylbenzene (all isomers) |
| Butyl phenol, Formaldehyde resin in Xylene |
| Butyl toluene |
| C9 Resinfeed (DSM) [1] |
| p-Cymene |
| Detergent alkylate |
| Dialkyl (C10–C14) benzenes |
| Diethylbenzene |
| Diisopropylnaphthalene |
| Diisopropylbenzene (all isomers) |
| Dimethylbenzene |
| Diphenyl |
| Dodecyl xylene |
| Ethylbenzene |
| Ethyl toluene |
| Gasolines: Pyrolysis (containing Benzene) |
| 1-Hexadecylnaphthalene/1,4-bis(Hexadecyl)naphthalene mixture |
| 1-n-Hexadecylnaphthalene (90%)/1,4-di-n-(Hexadecyl)naphthalene (10%) |
| Hexylbenzenes |
| Isopropylbenzenes |
| Methyl naphthalene (molten) |
| Naphthalene (molten) |
| Naphthalene still residue |
| Parachlorobenzotrifluoride |
| 1-Phenyl-1-xylyl ethane |
| Poly(2+)cyclic aromatics |
| Polyolefinamine in alkyl(C2–C4)benzenes |
| Polyolefinamine in aromatic solvent |
| Propylbenzenes (all isomers) |
| Pseudocumene |
| Pyrolysis gasoline (containing Benzene) |
| Tetrahydronaphthalene |

TABLE II TO PART 150—GROUPING OF CARGOES—Continued

| 0. UNASSIGNED CARGOES |
|---|
| Tetramethylbenzene (all isomers) |
| 1,2,3,5-Tetramethylbenzene |
| Toluene |
| Triethylbenzene |
| Trimethylbenzene (all isomers) |
| Xylenes |
| Xylenes/Ethylbenzene (10% or more) mixture |
| 33. MISCELLANEOUS HYDROCARBON MIXTURES |
| Alachlor technical (90% or more) |
| Alkylbenzene sulfonic acid, sodium salt solution |
| Alkyl dithiothiadiazole (C6–C24) |
| Alkyl (C18–C28) toluenesulfonic acid, Calcium salts, low overbase |
| Alkyl (C18–C28) toluenesulfonic acid, calcium salts, high overbase |
| Anthracene oil (Coal tar fraction) |
| Asphalt |
| Asphalt blending stocks, roofers flux |
| Asphalt blending stocks, straight run residue |
| Asphalt emulsion |
| Asphalt, kerosene, and other components |
| Aviation alkylates (C8 paraffins and iso-paraffins BPT 95–120°C) |
| Bio-fuel blends of Diesel/gas oil and Alkanes (C10–C26), linear and branched with a flash point >60 °C (>25% but <99% by volume) |
| Bio-fuel blends of Diesel/gas oil and Alkanes (C10–C26), linear and branched with a flash point ≤ 60 °C (>25% but <99% by volume) |
| Calcium sulfonate/Calcium carbonate/Hydrocarbon solvent mixture |
| Coal tar |
| Coal tar crude bases |
| Coal tar distillate |
| Coal tar pitch (molten) |
| Coal tar, high temperature |
| Decahydronaphthalene |
| Diphenyl/Diphenyl ether mixture |
| Distillates, flashed feed stocks |
| Distillates, straight run |
| Drilling mud (low toxicity) (if flammable or combustible) |
| Gas oil, cracked |
| Gasoline blending stock, alkylates |
| Gasoline blending stock, reformates |
| Gasolines: |
| Automotive (not over 4.23 grams lead per gal.) |
| Aviation (containing not over 4.86 grams lead per gal.) |
| Casinghead (natural) |
| Polymer |
| Straight run |
| Jet fuels: |
| JP–4 |
| JP–5 |
| JP–8 |
| Kerosene |
| Mineral spirits |
| Naphtha: |
| Aromatic |
| Coal tar naphtha solvent |
| Heavy |
| Paraffinic |
| Petroleum |
| Solvent |
| Stoddard solvent |
| Varnish Makers' and Painters' |
| Oil, fuel: |
| No. 1 |
| No. 1–D |
| No. 2 |
| No. 2–D |
| No. 4 |
| No. 5 |
| No. 6 |
| Oil, misc: |
| Aliphatic |
| Aromatic |
| Clarified |
| Coal |
| Crude |
| Diesel |

TABLE II TO PART 150—GROUPING OF CARGOES—Continued

| 0. UNASSIGNED CARGOES |
|---|
| Gas, cracked |
| Gas, high pour |
| Gas, low pour |
| Gas, low sulfur |
| Heartcut distillate |
| Linseed |
| Lubricating |
| Mineral |
| Mineral seal |
| Motor |
| Neatsfoot |
| Penetrating |
| Pine |
| Residual |
| Resin, distilled |
| Road |
| Rosin |
| Spindle |
| Transformer |
| Turbine |
| Vacuum gas oil |
| ORIMULSION |
| Oxyalkylated alkyl phenol formaldehyde |
| Petrolatum |
| Petroleum wax |
| Polybutene |
| Polyolefin (molecular weight 300+) |
| Polyolefin amide alkeneamine (C17+) |
| Polyolefin amide alkeneamine (C28+), |
| Polyolefin amide alkeneamine borate (C28–C250) |
| Polyolefin amide alkeneamine in mineral oil |
| Polyolefinamine (C28–C250) |
| Sulfohydrocarbon (C3–C88) |
| Sulfurized fat (C14–C20) |
| Sulfurized polyolefinamide alkene(C28–C250) amine |
| Turpentine substitute |
| White spirit |
| White spirit (low (15–20%) aromatic) |
| 34. ESTERS |
| Alkane (C14–C17) sulfonic acid, sodium salt solutions |
| Alkylaryl phosphate mixtures (more than 40% Diphenyl tolyl phosphate, less than 0.02% ortho-isomer) |
| Alkyl (C8+) amine, Alkenyl (C12+) acid ester mixture |
| Alkyl dithiocarbamate (C19–C35) |
| Alkyl ester copolymer (C4–C20) |
| Alkyl ester copolymer in mineral oil |
| Alkyl phenol sulfide (C8–C40) |
| Alkyl (C8–C40) phenol sulfide |
| Alkyl phthalates |
| Alkyl (C10–C20), saturated and unsaturated phosphite |
| Alkyl (C7–C9) nitrates [1] |
| Alkyl sulfonic acid ester of phenol |
| Alkyl (C18–C28) toluenesulfonic acid, Calcium salts, borated |
| Amyl acid phosphate |
| Amyl acetate (all isomers) |
| Animal and Fish oils, n.o.s. |
| Cod liver oil |
| Lanolin |
| Neatsfoot oil |
| Pilchard oil |
| Sperm oil |
| Animal and Fish acid oils and distillates, n.o.s. |
| Animal acid oil |
| Fish acid oil |
| Lard acid oil |
| Mixed acid oil |
| Mixed general acid oil |
| Mixed hard acid oil |
| Mixed soft acid oil |
| Barium long-chain alkaryl (C11–C50) sulfonate |
| Barium long-chain alkyl (C8–C14) phenate sulfide |
| Benzenetricarboxylic acid, trioctyl ester |
| Benzyl acetate |

TABLE II TO PART 150—GROUPING OF CARGOES—Continued

| 0. UNASSIGNED CARGOES |
|---|
| Bio-fuel blends of Diesel/gas oil and FAME (>25% but <99% by volume) |
| Bio-fuel blends of Diesel/gas oil and vegetable oil (>25% but <99% by volume) |
| Bis (2-ethylhexyl) terephthalate |
| Boronated calcium sulfonate |
| Butyl acetate (all isomers) |
| Butyl benzyl phthalate |
| Butyl butyrate (all isomers) |
| n-Butyl formate |
| n-Butyl propionate |
| Butyl stearate |
| Calcium alkaryl sulfonate (C11–C50) |
| Calcium alkyl (C10–C28) salicylate |
| Calcium alkyl salicylate |
| Calcium alkyl (C9) phenol sulfide, polyolefin phosphorosulfide mixture |
| Calcium carbonate slurry |
| Calcium long-chain alkaryl sulfonate (C11–C50) |
| Calcium long-chain alkyl (C8–C40) phenate |
| Calcium long-chain alkyl (C5–C10) phenate |
| Calcium long-chain alkyl (C5–C20) phenate |
| Calcium long-chain alkyl (C11–C40) phenate |
| Calcium long-chain alkyl phenate sulfide (C8–C40) |
| Calcium long-chain alkyl (C18–C28) salicylate |
| Calcium long-chain alkyl salicylate (C13+) |
| Calcium nitrate solutions (50% or less) |
| Calcium nitrate/Magnesium nitrate/Potassium chloride solution |
| Calcium salts of fatty acids |
| Calcium stearate |
| Canola oil |
| Cobalt naphthenate in solvent naphtha |
| Copper salt of long-chain (C17+) alkanoic acid |
| Copper salt of long-chain (C3–C16) fatty acid |
| Cyclohexyl acetate |
| Decyl acetate |
| Dialkyl (C9–C10) phthalates |
| Dialkyl thiophosphates sodium salts solution |
| Dialkyl (C7–C13) phthalates |
| Di-(2-ethylhexyl) phthalate |
| Diheptyl phthalate |
| Dihexyl phthalate |
| Diisooctyl phthalate |
| Dioctyl phthalate |
| Diisodecyl phthalate |
| Diisononyl phthalate |
| Dinonyl phthalate |
| Ditridecyl phthalate |
| Diundecyl phthalate |
| Dibutyl hydrogen phosphonate |
| Dibutyl phthalate |
| Dibutyl terephthalate |
| Di-(2-ethylhexyl) adipate |
| Di-(2-ethylhexyl) terephthalate |
| Diethylene glycol dibenzoate |
| Diethylene glycol phthalate |
| Diethyl phthalate |
| Diethyl sulfate |
| Di-n-hexyl adipate |
| Diisobutyl phthalate |
| Diisononyl adipate |
| Dimethyl adipate |
| Dimethylcyclicsiloxane hydrolyzate |
| Dimethyl glutarate |
| Dimethyl hydrogen phosphite [1] |
| Dimethyl naphthalene sulfonic acid, sodium salt solution[1] |
| Dimethyl phthalate |
| Dimethylpolysiloxane |
| Dimethyl succinate |
| Dipropylene glycol dibenzoate |
| Dithiocarbamate ester (C7–C35) |
| Ditridecyl adipate |
| 2-Dodecenylsuccinic acid, dipotassium salt solution |
| 2-Ethoxyethyl acetate |
| Ethyl acetate |

TABLE II TO PART 150—GROUPING OF CARGOES—Continued

| 0. UNASSIGNED CARGOES |
|---|
| Ethyl acetoacetate |
| Ethyl butyrate |
| 2-Ethyl-2-(2,4-dichlorophenoxy) acetate |
| 2-Ethyl-2-(2,4-dichlorophenoxy) propionate |
| S-Ethyl dipropylthiocarbamate |
| Ethylene carbonate |
| Ethylene glycol acetate |
| Ethylene glycol butyl ether acetate |
| Ethylene glycol diacetate |
| Ethylene glycol ethyl ether acetate |
| Ethylene glycol methyl ether acetate |
| Ethyl-3-ethoxypropionate |
| Ethyl hexyl phthalate |
| Ethyl hexyl tallate |
| 2-Ethyl-2-(hydroxymethyl) propane-1,3-diol (C8–C10) ester |
| Ethyl lactate |
| Ethyl propionate |
| Fatty acid methyl esters |
| Fatty acids, (C8–C10) |
| Fatty acids, (C12+) |
| Fatty acids (saturated, C13+) |
| Fatty acids (saturated, C14+) |
| Fatty acids, (C16+) |
| Fatty acids, essentially linear (C6–C18) 2-ethylhexyl ester |
| Glyceryl triacetate |
| Glycidyl ester of C10 trialkyl acetic acid |
| Glycidyl ester of tertiary carboxylic acid |
| Glycidyl ester of tridecyl acetic acid |
| Glycidyl ester of Versatic acid |
| Glycol diacetate |
| Glycol triacetate |
| Heptyl acetate |
| Herbicide (C15–H22–NO2-Cl) |
| Hexyl acetate |
| Hog grease |
| Isobutyl formate |
| Isopropyl acetate |
| Lauric acid |
| Lauric acid methyl ester/Myristic acid methyl ester mixture |
| Lecithin |
| Magnesium long-chain alkaryl sulfonate (C11–C50) |
| Magnesium long-chain alkyl phenate sulfide (C8–C20) |
| Magnesium long-chain alkyl salicylate (C11+) |
| Magnesium nonyl phenol sulfide |
| Magnesium sulfonate |
| 3-Methoxybutyl acetate |
| 1-Methoxy-2-propyl acetate |
| Methyl acetate |
| Methyl acetoacetate |
| Methyl amyl acetate |
| Methyl butyrate |
| Methyl formate |
| 3-Methyl-3-methoxybutyl acetate |
| Methyl salicylate |
| N-(2-Methoxy-1-methyl ethyl)-2-ethyl-6-methyl chloroacetanilide |
| Metolachlor |
| Naphthalene sulfonic acid, sodium salt solution |
| Nitrilotriacetic acid, trisodium salt solution |
| Nonyl acetate |
| Nonyl phenol sulfide (90% or less) solution |
| Octamethylcyclotetrasiloxane |
| n-Octyl acetate |
| Octyl decyl adipate |
| Octyl nitrate |
| Octyl phthalate |
| Oil, edible: |
| Beechnut |
| Castor |
| Cocoa butter |
| Coconut |
| Cod liver |
| Corn |

TABLE II TO PART 150—GROUPING OF CARGOES—Continued

| 0. UNASSIGNED CARGOES |
|---|
| Cotton seed |
| Fish |
| Grape seed |
| Groundnut |
| Hazelnut |
| Illipe |
| Lard |
| Maize |
| Mango kernel |
| Nutmeg butter |
| Olive |
| Palm |
| Palm kernel |
| Palm kernel olein |
| Palm kernel stearin |
| Palm mid fraction |
| Palm olein |
| Palm stearin |
| Peanut |
| Poppy |
| Poppy Seed |
| Raisin seed |
| Rapeseed |
| Rapeseed, (low erucic acid containing less than 4% free fatty acids) |
| Rice bran |
| Safflower |
| Salad |
| Sesame |
| Shea |
| Soyabean |
| Sunflower |
| Sunflower seed |
| Tucum |
| Vegetable |
| Walnut |
| Oil, misc: |
| Acid mixture from soybean, corn (maize) and sunflower oil refining |
| Animal |
| Camelina |
| Cashew nut shell oil (untreated) |
| Coconut fatty acid |
| Coconut, fatty acid methyl ester |
| Cotton seed oil, fatty acid |
| Lanolin |
| Oiticica |
| Palm acid |
| Palm fatty acid distillate |
| Palm oil, fatty acid methyl ester |
| Palm kernel acid |
| Palm kernel fatty acid distillate |
| Palm, non-edible industrial grade |
| Perilla |
| Pilchard |
| Rapeseed fatty acid methyl esters |
| Seal |
| Soapstock |
| Soyabean (epoxidized) |
| Soyabean fatty acid methyl ester |
| Tall |
| Tall, crude |
| Tall, distilled |
| Tall, fatty acid |
| Tall, fatty acid (resin acids less than 20%) |
| Tall pitch |
| Tung |
| n-Pentyl propionate |
| Phosphate esters |
| Poly(2–8)alkylene glycol monoalkyl(C1–C6) ether acetate |
| Diethylene glycol butyl ether acetate |
| Diethylene glycol ethyl ether acetate |
| Diethylene glycol methyl ether acetate |
| Polycarboxylic ester (C9+) |

TABLE II TO PART 150—GROUPING OF CARGOES—Continued

| 0. UNASSIGNED CARGOES |
|---|
| Polydimethylsiloxane |
| Polyferric sulfate solution |
| Polymerized esters |
| Polymethylsiloxane |
| Polyolefin aminoester salts (MW 2000+) |
| Polyolefin ester (C28–C250) |
| Polyolefin phosphorosulfide, barium derivative (C28–C250) |
| Poly(20)oxyethylene sorbitan monooleate |
| Polysiloxane |
| Polysiloxane/White spirit, low (15–20%) aromatic |
| Potassium formate solutions |
| Potassium oleate |
| Potassium salt of polyolefin acid |
| n-Propyl acetate |
| Propylene carbonate |
| Propylene glycol methyl ether acetate |
| Siloxanes |
| Sodium acetate solutions |
| Sodium acetate, Glycol, Water mixture (not containing Sodium hydroxide) |
| Sodium alkyl (C14–C17) sulfonates (60–65% solution) |
| Sodium aluminosilicate slurry |
| Sodium benzoate |
| Sodium bicarbonate solution (less than 10%) |
| Sodium dimethyl naphthalene sulfonate solution [1] |
| Sodium long-chain alkyl salicylate (C13+) |
| Sodium naphthalene sulfonate solution |
| Sodium petroleum sulfonate |
| Sodium sulfate solution |
| Stearic acid |
| Tallow |
| Tallow fatty acid |
| Triarylphosphate |
| Tributyl phosphate |
| Tricresyl phosphate (containing 1% or more ortho-isomer) |
| Tricresyl phosphate (containing less than 1% ortho-isomer) |
| Tridecanoic acid |
| Tridecyl acetate |
| Triethylene glycol di-(2-ethylbutyrate) |
| Triethylene glycol dibenzoate |
| Triethyl phosphate |
| Triethyl phosphite [1] |
| Triisooctyl trimellitate [1] |
| Triisopropylated phenyl phosphates |
| Trimethyl phosphite [1] |
| 2,2,4-Trimethyl-1,3-pentanediol diisobutyrate |
| 2,2,4-Trimethyl-1,3-pentanediol-1-isobutyrate |
| 2,2,4-Trimethyl-3-pentanol-1-isobutyrate |
| Trisodium nitrilotriacetate solution |
| Trixylyl phosphate |
| Trixylenyl phosphate |
| Vegetable acid oils, n.o.s. |
| Corn acid oil |
| Cottonseed acid oil |
| Dark mixed acid oil |
| Groundnut acid oil |
| Mixed acid oil |
| Mixed general acid oil |
| Mixed hard acid oil |
| Mixed soft acid oil |
| Rapeseed acid oil |
| Safflower acid oil |
| Soya acid oil |
| Sunflower seed acid oil |
| Vegetable fatty acid distillates, n.o.s. |
| Palm kernel fatty acid distillate |
| Palm oil fatty acid distillate |
| Tall fatty acid distillate |
| Tall oil fatty acid distillate |
| Vegetable oils, n.o.s. |
| Beechnut oil |
| Camelina oil |
| Cashew nut shell |

TABLE II TO PART 150—GROUPING OF CARGOES—Continued

| 0. UNASSIGNED CARGOES |
|---|
| Castor oil |
| Cocoa butter |
| Coconut oil |
| Corn oil |
| Cotton seed oil |
| Croton oil |
| Grape seed oil |
| Groundnut oil |
| Hazelnut oil |
| Illipe oil |
| Linseed oil |
| Mango kernel oil |
| Nutmeg butter |
| Oiticica oil |
| Olive oil |
| Palm kernel oil |
| Palm kernel olein |
| Palm kernel stearin |
| Palm mid fraction |
| Palm, non-edible industrial grade |
| Palm oil |
| Palm olein |
| Palm stearin |
| Peanut oil |
| Peel oil (oranges and lemons) |
| Perilla oil |
| Pine oil |
| Poppy seed oil |
| Poppy oil |
| Raisin seed oil |
| Rapeseed oil |
| Rapeseed (low erucic acid containing less than 4% free fatty acids) |
| Rice bran oil |
| Rosin oil |
| Safflower oil |
| Salad oil |
| Sesame oil |
| Shea butter |
| Soyabean oil |
| Sunflower seed oil |
| Tall |
| Tall, crude |
| Tall, distilled |
| Tall, pitch |
| Tucum oil |
| Tung oil |
| Walnut oil |
| Waxes: |
| Candelilla |
| Carnauba |
| Zinc alkaryl dithiophosphate (C7–C16) |
| Zinc alkyl dithiophosphate (C3–C14) |
| 35. VINYL HALIDES |
| Vinyl chloride |
| Vinylidene chloride |
| 36. HALOGENATED HYDROCARBONS |
| Benzyl chloride |
| Bromochloromethane |
| Carbon tetrachloride [1] |
| Catoxid feedstock [1] |
| Chlorinated paraffins (C10–C13) |
| Chlorinated paraffins (C14–C17) (with 50% Chlorine or more, and less than 1% C13 or shorter chains) |
| Chlorinated paraffins (C14–C17) (with 52% Chlorine) |
| Chlorinated paraffins (C18+) with any level of chlorine |
| Chlorobenzene |
| Chlorodifluoromethane |
| Chloroform |
| m-Chlorotoluene |
| o-Chlorotoluene |
| p-Chlorotoluene |
| Chlorotoluenes (mixed isomers) |
| Dibromomethane |

TABLE II TO PART 150—GROUPING OF CARGOES—Continued

| 0. UNASSIGNED CARGOES |
|---|
| Dichlorobenzene (all isomers) |
| 3,4-Dichloro-1-butene |
| Dichlorodifluoromethane |
| 1,1-Dichloroethane |
| 1,6-Dichlorohexane |
| Dichloromethane |
| Dichloropropane |
| 1,1-Dichloropropane |
| 1,2-Dichloropropane |
| 1,3-Dichloropropane |
| Ethyl chloride |
| Ethylene dibromide |
| Ethylene dichloride [1] |
| Methyl bromide |
| Methyl chloride |
| Methylene chloride |
| Monochlorodifluoromethane |
| Pentachloroethane |
| Perchloroethylene |
| n-Propyl chloride |
| Sym-trichlorobenzene |
| Tetrachloroethane |
| 1,1,2,2-Tetrachloroethane |
| 1,2,3-Trichlorobenzene (molten) |
| 1,2,4-Trichlorobenzene |
| 1,2,3-Trichlorobenzol |
| 1,1,1-Trichloroethane [1] |
| 1,1,2-Trichloroethane |
| Trichloroethylene [1] |
| 1,1,2-Trichloro-1,2,2-trifluoroethane |
| 1,2,3-Trichloropropane |
| 37. NITRILES |
| Acetonitrile |
| Acetonitrile (low purity grade) |
| Adiponitrile |
| Lactonitrile solution (80% or less) |
| 2-Methylglutaronitrile |
| 2-Methylglutaronitrile with 2-Ethylsuccinonitrile (12% or less) |
| Propionitrile |
| Tallow alkyl nitrile |
| 38. CARBON DISULFIDE |
| Carbon disulfide |
| 39. SULFOLANE |
| Sulfolane |
| 40. GLYCOL ETHERS |
| Alkyl (C7–C11) phenol poly (4–12) ethoxylates |
| Alkyl (C9–C15) phenyl propoxylate |
| Diethylene glycol [1] |
| Diethylene glycol dibutyl ether |
| Diethylene glycol diethyl ether |
| Diethylene glycol phenyl ether |
| Dipropylene glycol |
| Ethoxy triglycol |
| 2-Ethoxyethanol |
| Ethoxy triglycol (crude) |
| Ethylene glycol dibutyl ether |
| Ethylene glycol n-propyl ether |
| Ethylene glycol monoalkyl ethers |
| Ethylene glycol butyl ether |
| Ethylene glycol ethyl ether |
| Ethylene glycol isobutyl ether |
| Ethylene glycol methyl butyl ether |
| Ethylene glycol tert-butyl ether |
| Ethylene glycol hexyl ether |
| Ethylene glycol methyl ether |
| Ethylene glycol propyl ether |
| Ethylene glycol isopropyl ether |
| Ethylene glycol phenyl ether |
| Ethylene glycol phenyl ether/Diethylene glycol phenyl ether mixture |
| Glucitol/Glycerol blend propoxylated (containing less than 10% amines) |
| Glycerol ethoxylated |
| Glycerol polyalkoxylate |

TABLE II TO PART 150—GROUPING OF CARGOES—Continued

| 0. UNASSIGNED CARGOES |
|---|
| Glycerol propoxylated |
| Glycerol, propoxylated and ethoxylated |
| Glycerol/Sucrose blend propoxylated and ethoxylated |
| alpha-Hydro-omega-hydroxytetradeca (oxytetramethylene) |
| Methoxy triglycol |
| Nonyl phenol poly(4+)ethoxylate |
| Pentaethylene glycol methyl ether |
| Polyalkylene glycols/Polyalkylene glycol monoalkyl ethers mixtures |
| Poly(2–8)alkylene glycol monoalkyl(C1–C6) ether |
| Diethylene glycol butyl ether |
| Diethylene glycol ethyl ether |
| Diethylene glycol n-hexyl ether |
| Diethylene glycol propyl ether |
| Diethylene glycol methyl ether |
| Dipropylene glycol butyl ether |
| Dipropylene glycol methyl ether |
| Polyalkylene glycol butyl ether |
| Polyethylene glycol monoalkyl ether |
| Polypropylene glycol methyl ether |
| Tetraethylene glycol methyl ether |
| Triethylene glycol butyl ether |
| Triethylene glycol ethyl ether |
| Triethylene glycol methyl ether |
| Tripropylene glycol methyl ether |
| Polyethylene glycol |
| Polyethylene glycol dimethyl ether |
| Poly (ethylene glycol) methylbutenyl ether (MW > 1000) |
| Polypropylene glycol |
| Poly(tetramethylene ether) glycols (mw 950–1050) |
| Polytetramethylene ether glycol |
| Propylene glycol monoalkyl ether |
| n-Propoxypropanol |
| Propylene glycol n-butyl ether |
| Propylene glycol ethyl ether |
| Propylene glycol methyl ether |
| Propylene glycol propyl ether |
| Propylene glycol phenyl ether |
| Tetraethylene glycol |
| Triethylene glycol |
| Triethylene glycol butyl ether mixture |
| Triethylene glycol ether mixture |
| Tripropylene glycol |
| 41. ETHERS |
| Alcohol (C12–C13, branched and linear) poly (4–8) propoxy sulfates, sodium salt 25–30% solution |
| Alkaryl polyether (C9–C20) |
| tert-Amyl methyl ether |
| n-Butyl ether |
| Dichloroethyl ether |
| 2,2′-Dichloroisopropyl ether |
| Diethyl ether |
| Dimethyl ether |
| Dimethyl furan |
| 1,4-Dioxane |
| Diphenyl ether |
| Diphenyl ether/Biphenyl ether mixture |
| Diphenyl ether/Diphenyl phenyl ether mixture |
| Diphenyl oxide |
| ETBE |
| Ethyl tert-butyl ether [1] |
| Ethyl ether |
| Isopropyl ether |
| Long-chain alkaryl polyether (C11–C20) |
| Methyl tert-butyl ether [1] |
| Methyl tert-pentyl ether |
| MTBE |
| Polyether, borated |
| Polyether (molecular weight 1350+) |
| Polyether polyols |
| Poly (oxyalkylene) alkenyl ether (MW>1000) |
| Polyoxybutylene alcohol |
| Propyl ether |
| TAME |

TABLE II TO PART 150—GROUPING OF CARGOES—Continued

0. UNASSIGNED CARGOES

Tetrahydrofuran
1,3,5-Trioxane
42. NITROCOMPOUNDS
o-Chloronitrobenzene
Dinitrotoluene (molten)
Nitrobenzene
o-Nitrochlorobenzene
Nitroethane
Nitroethane(80%)/Nitropropane (20%)
Nitroethane/1-Nitropropane (each 15% or more) mixture
Nitrophenol (mixed isomers)
Nitropropane (60%)/Nitroethane (40%) mixture
1-or 2-Nitropropane
o- or p-Nitrotoluenes
43. MISCELLANEOUS WATER SOLUTIONS
Alkyl polyglucoside solution
Alkyl (C8–C10) polyglucoside solution (65% or less)
Alkyl (C8–C10)/(C12–C14):(40% or less/60% or more) polyglucoside solution (55% or less)
Alkyl (C8–C10)/(C12–C14):(50%/50%) polyglucoside solution (55% or less)
Alkyl (C8–C10)/(C12–C14):(60% or more/40% or less) polyglucoside solution (55% or less)
Alkyl (C12–C14) polyglucoside solution (55% or less)
Aluminum sulfate solution [1]
2-Amino-2-hydroxymethyl-1,3-propanediol solution
Ammonium bisulfite solution (70% or less) [1]
Ammonium chloride solution (less than 25%)
Ammonium lignosulfonate solution
Ammonium nitrate/Urea solution (not containing Ammonia)
Ammonium phosphate/Urea solution
Ammonium polyphosphate solution
Ammonium sulfate solution
Ammonium sulfate solution (20% or less)
Ammonium thiosulfate solution (60% or less)
Apple juice
Calcium bromide/Zinc bromide solution
Calcium chloride solution
Calcium lignosulfonate solutions
Caramel solutions
Cesium formate solution
Clay slurry
Coal slurry
Corn syrup
Dextrose solution
2,4-Dichlorophenoxyacetic acid, Diethanolamine salt solution
2,4-Dichlorophenoxyacetic acid, Triisopropanolamine salt solution[1]
Diethanolamine salt of 2,4-Dichlorophenoxyacetic acid solution
Diethylenetriamine pentaacetic acid, pentasodium salt solution
Dodecyl diphenyl ether disulfonate solution
Drilling brines (containing Calcium, Potassium or Sodium salts)
Drilling brines (containing Zinc salts)
Drilling brines, including: Calcium bromide solution, Calcium chloride solution and Sodium chloride solution
Drilling mud (low toxicity) (if non-flammable or non-combustible)
Ethylenediaminetetraacetic acid/tetrasodium salt solution
Ethylene-Vinyl acetate copolymer (emulsion)
Ferric hydroxyethylethylenediaminetriacetic acid, trisodium salt solution [1]
Fish solubles (water based fish meal extracts)
Fructose solution
Fumaric adduct of Rosin, water dispersion
Glucose solution
Hexamethylenediamine adipate (50% in water)
Hexamethylenediamine adipate solution
N-(Hydroxyethyl)ethylenediamine triacetic acid, trisodium salt solution
Kaolin clay solution
Kaolin slurry
Latex, liquid synthetic
Latex: Carboxylated Styrene-Butadiene copolymer; Styrene-Butadiene rubber
Lauryl polyglucose (50% or less)
Lauryl polyglucose
Lignin liquor
Ligninsulfonic acid, magnesium salt solution
Ligninsulfonic acid, sodium salt solution
Liquid Streptomyces solubles
L-Lysine solution (60% or less)

TABLE II TO PART 150—GROUPING OF CARGOES—Continued

| 0. UNASSIGNED CARGOES |
|---|
| Magnesium nitrate solution (66.7%) |
| N-Methylglucamine solution (70% or less) |
| Microsilica slurry |
| Milk |
| Naphthenic acid, sodium salt solution |
| Pentasodium salt of Diethylenetriamine pentaacetic acid solution |
| Phenol solutions (2% or less) |
| Polyacrylic acid solution (40% or less) |
| Potassium chloride solution |
| Potassium chloride solution (10% or more) |
| Potassium chloride solution (less than 26%) |
| Potassium thiosulfate (50% or less) |
| Rosin soap (disproportionated) solution |
| Sewage sludge |
| Silica slurry |
| Sludge, treated |
| Sodium bromide solution (less than 50%) |
| Sodium hydrogen sulfite solution (45% or less) |
| Sodium lignosulfonate solution |
| Sodium naphthenate solution |
| Sodium poly(4+)acrylate solution |
| Sodium polyacrylate solution [1] |
| Sodium salt of Ferric hydroxyethylethylenediaminetriacetic acid solution |
| Sodium silicate solution [1] |
| Sodium sulfide solution (15% or less) |
| Sodium sulfite solution (25% or less) |
| Sodium tartrates/Sodium succinates solution |
| Sulfonated polyacrylate solution [1] |
| Tall oil soap (disproportionated) solution |
| Tetrasodium salt of ethylenediaminetetraacetic acid solution |
| Titanium dioxide slurry |
| Triisopropanolamine salt of 2,4-Dichlorophenoxyacetic acid solution, |
| Trisodium salt of N-(Hydroxyethyl)ethylenediaminetriacetic acid solution |
| Urea solution |
| Urea/Ammonium phosphate solution |
| Urea/Ammonium nitrate solution (containing less than 1% free Ammonia) |
| Vegetable protein solution (hydrolyzed) |
| Water |
| Zinc bromide/Calcium bromide solution |

**Note:**
1. See Appendix I to 46 CFR part 150 (Exceptions to the Chart).

■ 6. Revise Appendix I to part 150, as amended by the interim rule published on August 16, 2013 (78 FR 50148), effective January 16, 2017, as delayed at 79 FR 68132, November 14, 2014, to read as follows:

## Appendix I to Part 150—Exceptions to the Chart

(a) The binary combinations listed below have been tested as prescribed in Appendix III to part 150 and found not to be dangerously reactive. These combinations are exceptions to Figure 1 of part 150 (Compatibility Chart) and may be stowed in adjacent tanks.

| Member of reactive group | Compatible with |
|---|---|
| Acetone (18) | Diethylenetriamine (7). |
| Acetone cyanohydrin (0) | Acetic acid (4). |
| | Acrylates (14). |
| | Alcohols, Gylcols (20). |
| | Aldehydes (19). |
| | Aromatic Hydrocarbon Mixtures (32). |
| | Carbon Disulfide (38). |
| | Esters (34). |
| | Ethers (41). |
| | Glycol Ethers (40). |
| | Halogenated Hydrocarbons (36). |
| | Ketones (18). |
| | Misc. Hydrocarbon Mixtures (33). |
| | Nitriles (37). |
| | Nitrocompounds (42). |
| | Olefins (30). |
| | Paraffins (31). |

| Member of reactive group | Compatible with |
|---|---|
| | Phenols, Cresols (21). |
| | Substituted Allyls (15). |
| | Sulfolane (39). |
| | Vinyl Acetate (13). |
| | Vinyl Halides (35). |
| Acrylonitrile (15) | Triethanolamine (8). |
| 1,3-Butylene glycol (20) | Morpholine (7). |
| 1,4-Butylene glycol (20) | Ethylamine (7). |
| | Triethanolamine (8). |
| gamma-Butyrolactone (0) | N-Methyl-2-pyrrolidone (9). |
| Caustic potash, 50% or less (5) | Bio-fuel blends of Gasoline and Ethyl alcohol (>25% but <99% by volume) (20). |
| | Isobutyl alcohol (20). |
| | Ethyl alcohol (20). |
| | n-Butyl alcohol (20). |
| | Ethylene glycol (20). |
| | Isopropyl alcohol (20). |
| | Methyl alcohol (20). |
| | iso-Octyl alcohol (20). |
| | Propylene glycol (20). |
| Caustic soda, 50% or less (5) | Acrylonitrile/Styrene copolymer dispersion in Polyether polyol (20). |
| | Bio-fuel blends of Gasoline and Ethyl alcohol (>25% but <99% by volume) (20). |
| | iso-Butyl alcohol (20). |
| | Butyl alcohol (20). |
| | tert-Butyl alcohol, Methanol mixtures. |
| | Decyl alcohol (20). |
| | Cetyl alcohol (20). |
| | Alcohol (C12–C16) poly(1–6)ethoxylates) (20). |
| | iso-Decyl alcohol (20). |
| | Diacetone alcohol (20). |
| | Diethylene glycol (40). |
| | Dodecyl alcohol (20). |
| | Ethyl alcohol (20). |
| | Ethyl alcohol (40%, whiskey) (20). |
| | Ethylene glycol (20). |
| | Ethylene glycol, Diethylene glycol mixture (20). |
| | Ethyl hexanol (Octyl alcohol) (20). |
| | Methyl alcohol (20). |
| | Nonyl alcohol (20). |
| | iso-Nonyl alcohol (20). |
| | Propyl alcohol (20). |
| | iso-Propyl alcohol (20). |
| | Propylene glycol (20). |
| | Sodium chlorate solution (0). |
| | iso-Tridecanol (20). |
| Dimethyl disulfide (0) | Acrylates (14). |
| | Alcohols, Glycols (20). |
| | Esters (34). |
| | Halogenated Hydrocarbons (36). |
| | Ketones (18). |
| | Methyl tert-butyl ether (41). |
| | Aromatic Hydrocarbon Mixtures (32). |
| | Olefins (30). |
| | Organic Acids (4). |
| | Organic Anhydrides (11). |
| | Paraffins (31). |
| | Phenols, Cresols (21). |
| Diphenylmethane diisocyanate (12) | 2,2-Dimethylpropane-1,3-diol (20). |
| | Polypropylene glycol (40). |
| tert-Dodecanethiol (0) | Acetone (18). |
| | Acrylonitrile (15). |
| | n-Butyl acrylate (14). |
| | Caustic soda solution (50%) (5). |
| | Chloroform (36). |
| | iso-Decyl alcohol (20). |
| | Diglycidyl ether of Bisphenol A (16). |
| | Dichloromethane (36). |
| | Diisodecyl phthalate (34). |
| | Dipropylene glycol (40). |
| | Epichlorohydrin (17). |
| | Ethyl acrylate (14). |
| | Ethylene glycol monoalkyl ethers (40). |

| Member of reactive group | Compatible with |
|---|---|
| | Methanol (20). |
| | Methyl ethyl ketone (18). |
| | Methyl isobutyl ketone (18). |
| | Naphtha, Solvent (33). |
| | iso-Nonyl alcohol (20). |
| | Perchloroethylene (36). |
| | Poly(2–8)alkylene glycol monoalkyl(C1–C6) ether (40). |
| | iso-Propyl alcohol (20). |
| | iso-Propylamine solution (70%) (7). |
| | Propylene glycol methyl ether (40). |
| | Propylene glycol methyl ether acetate (34). |
| | Tall oil, crude (34). |
| | Tall oil fatty acid (resin acids less than 20%) (34). |
| | Toluene (32). |
| | Toluene diisocyanate (TDI) (12). |
| | White mineral oil (Carnation oil) (33). |
| Dodecyl and Tetradecylamine mixture (7) | Tall oil, fatty acid (34). |
| Ethylenediamine (7) | Bio-fuel blends of Gasoline and Ethyl alcohol (>25% but <99% by volume) (20). |
| | Butyl alcohol (20). |
| | tert-Butyl alcohol (20). |
| | Butylene glycol (20). |
| | Creosote (21). |
| | Diethylene glycol (40). |
| | Ethyl alcohol (20). |
| | Ethylene glycol (20). |
| | Ethyl hexanol (20). |
| | Fatty alcohols (C12–C14). |
| | Glycerine (20). |
| | Isononyl alcohol (20). |
| | Isophorone (18). |
| | Methyl butyl ketone (18). |
| | Methyl iso-butyl ketone (18). |
| | Methyl ethyl ketone (18). |
| | Propyl alcohol (20). |
| | Propylene glycol (20). |
| Lactic acid (0) | Acetic acid (4). |
| | Benzene (32). |
| | Ethanol (20). |
| | Polypropylene glycol (40). |
| | Vinyl acetate (13). |
| Oleum (0) | Hexane (31). |
| | Dichloromethane (36). |
| | Perchloroethylene (36). |
| 1,2-Propylene glycol (20) | Diethylenetriamine (7). |
| | Polyethylene polyamines (7). |
| | Triethylenetetramine (7). |
| Sodium cresylate as Cresylate spent caustic (5) | Methyl alcohol (20). |
| Sodium dichromate solution (70% or less) (0) | Acetone (18). |
| | n-Butyl alcohol (20). |
| | Ethyl Acetate (34). |
| | 1-Hexene (30). |
| | Methyl alcohol (20). |
| | Octene (all isomers) (30). |
| | Phosphoric Acid (1). |
| Sodium hydrogen sulfide solution (5) | iso-Propyl alcohol (20). |
| Sodium hydrosulfide solution (5) | Methyl alcohol (20). |
| | Iso-Propyl alcohol (20). |
| Sodium Methylate 21–30% in methanol (0) | 1,2-Dichloropropane (36). |
| | Chlorobenzene (36). |
| | Cyclohexanone (18). |
| | Cyclohexanone, Cyclohexanol mixtures (18). |
| | Diethanolamine (8). |
| | Diisononyl phthalate (34). |
| | Dimethylformamide (10). |
| | Ethyl alcohol (20). |
| | Ethylene glycol (20). |
| | Furfuryl alcohol (20). |
| | Heptene (all isomers) (30). |
| | Isobutyl alcohol (20). |
| | Isopropyl alcohol (20). |
| | Lubricating oil (33). |
| | Methyl ethyl ketone (18). |

| Member of reactive group | Compatible with |
|---|---|
| Sulfuric acid (2) | Nonene (all isomers) (30).<br>Nonyl alcohol (all isomers) (20).<br>Octene (all isomers) (30).<br>o-Toluidine (9).<br>Perchloroethylene (36).<br>Polyisobutenamine in aliphatic (C10–C14) solvent (7).<br>Xylene (32).<br>Coconut oil (34).<br>Coconut oil acid (34).<br>Palm oil (34).<br>Soyabean oil (34).<br>Tallow (34). |
| Sulfuric acid, 98% or less (2) | Choice white grease tallow (34). |
| Urea/Ammonium Nitrate solution (containing less than 1% free Ammonia) (43). | Magnesium chloride solutions (0). |

(b) The binary combinations listed below have been determined to be dangerously reactive, based on either data obtained in the literature or on laboratory testing which has been carried out in accordance with procedures prescribed in Appendix III. These combinations are exceptions to the Compatibility Chart (Figure 1) and may not be stowed in adjacent tanks.

Acetone cyanohydrin (0) is not compatible with Groups 1–12, 16, 17 and 22.

Acrolein (19) is not compatible with Group 1, Non-Oxidizing Mineral Acids.

Acrylic acid (4) is not compatible with Group 9, Aromatic Amines.

Acrylonitrile (15) is not compatible with Group 5, Caustics.

Alkylbenzene sulfonic acid (less than 4%) (0) is not compatible with Groups 1–3, 5–9, 15, 16, 18, 19, 30, 34, 37, and strong oxidizers.

Allyl alcohol (15) is not compatible with Group 12, Isocyanates.

Alkyl (C7–C9) nitrates (34) is not compatible with Group 1, Non-oxidizing Mineral Acids.

Aluminum sulfate solution (43) is not compatible with Groups 5–11.

Ammonium bisulfite solution (70% or less) (43) is not compatible with Groups 1, 3, 4, and 5.

Benzenesulfonyl chloride (0) is not compatible with Groups 5–7, and 43.

1, 4-Butylene glycol (20) is not compatible with Caustic soda solution, 50% or less (5).

gamma-Butyrolactone (0) is not compatible with Groups 1–9.

C9 Resinfeed (DSM) (32) is not compatible with Group 2, Sulfuric acid.

Carbon tetrachloride (36) is not compatible with Tetraethylenepentamine or Triethylenetetramine, both Group 7, Aliphatic amines.

Catoxid feedstock (36) is not compatible with Group 1, 2, 3, 4, 5, or 12.

Caustic soda solution, 50% or less (5) is not compatible with 1, 4-Butylene glycol (20).

1-(4-Chlorophenyl)-4, 4-dimethyl pentan-3-one (18) is not compatible with Group 5 (Caustics) or 10 (Amides).

Crotonaldehyde (19) is not compatible with Group 1, Non-Oxidizing Mineral Acids.

Cyclohexanone/Cyclohexanol mixture (18) is not compatible with Group 12, Isocyanates.

2, 4-Dichlorophenoxyacetic acid, Triisopropanolamine salt solution (43) is not compatible with Group 3, Nitric Acid.

2, 4-Dichlorophenoxyacetic acid, Dimethylamine salt solution (0) is not compatible with Groups 1–5, 11, 12, and 16.

Diethylenetriamine (7) is not compatible with 1, 2, 3-Trichloropropane, Group 36, Halogenated hydrocarbons.

Dimethyl hydrogen phosphite (34) is not compatible with Groups 1 and 4.

Dimethyl naphthalene sulfonic acid, sodium salt solution (34) is not compatible with Group 12, Formaldehyde, and strong oxidizing agents.

Dodecylbenzenesulfonic acid (0) is not compatible with oxidizing agents and Groups 1, 2, 3, 5, 6, 7, 8, 9, 15, 16, 18, 19, 30, 34, and 37.

Ethylenediamine (7) and Ethyleneamine EA 1302 (7) are not compatible with either Ethylene dichloride (36) or 1, 2, 3-Trichloropropane (36).

Ethylene dichloride (36) is not compatible with Ethylenediamine (7) or Ethyleneamine EA 1302 (7).

Ethylidene norbornene (30) is not compatible with Groups 1–3 and 5–8.

2-Ethyl-3-propylacrolein (19) is not compatible with Group 1, Non-Oxidizing Mineral Acids.

Ethyl tert-butyl ether (41) is not compatible with Group 1, Non-oxidizing mineral acids.

Fatty acids, essentially linear (C6–C18) 2-ethylhexyl ester (34) is not compatible with Group 3, Nitric acid.

Ferric hydroxyethylethylenediamine triacetic acid, Triodium salt solution (43) is not compatible with Group 3, Nitric acid.

Fish oil (34) is not compatible with Sulfuric acid (2).

Formaldehyde (over 50%) in Methyl alcohol (over 30%) (19) is not compatible with Group 12, Isocyanates.

Formic acid (4) is not compatible with Furfuryl alcohol (20).

Furfuryl alcohol (20) is not compatible with Group 1, Non-Oxidizing Mineral Acids and Formic acid (4).

1,6-Hexanediol distillation overheads (4) is not compatible with Group 3, Nitric acid, and Group 9, Aromatic amines.

2-Hydroxyethyl acrylate (14) is not compatible with Group 5, 6, or 12.

Isophorone (18) is not compatible with Group 8, Alkanolamines.

Lactic acid (0) is not compatible with Caustic soda solution.

Magnesium chloride solution (0) is not compatible with Groups 2, 3, 5, 6 and 12.

Mesityl oxide (18) is not compatible with Group 8, Alkanolamines.

Methacrylonitrile (15) is not compatible with Group 5 (Caustics).

Methyl tert-butyl ether (41) is not compatible with Group 1, Non-oxidizing Mineral Acids.

Nitroethane, 1-Nitropropane (each 15% or more) mixture (42) is not compatible with Group 7, Aliphatic amines, Group 8, Alkanol amines, and Group 9, Aromatic amines.

Nitropropane (20%), nitroethane (80%) mixture (42) is not compatible with Group 7 (Aliphatic amines), Group 8 (Alkanol amines), and Group 9 (Aromatic amines).

NIAX POLYOL APP 240C (0) is not compatible with Groups 2, 3, 5, 7, or 12.

o-Nitrophenol (0) is not compatible with Groups 2, 3, and 5–10.

Oleum (0) is not compatible with Sulfuric acid (2) and 1, 1, 1-Trichloroethane (36).

Phthalate based polyester polyol (0) is not compatible with Groups 2, 3, 5, 7 and 12.

Polyglycerine, Sodium salts solution (20) is not compatible with Groups 1, 4, 11, 16, 17, 19, 21 and 22.

Propylene, Propane, MAPP gas mixture (containing 12% or less MAPP gas) (30) is not compatible with Group 1 (Non-oxidizing mineral acids), Group 36 (Halogenated hydrocarbons), nitrogen dioxide, oxidizing materials, or molten sulfur.

Sodium acetate, Glycol, Water mixture (1% or less Sodium hydroxide) (5) is not compatible with Group 12 (Isocyanates).

Sodium chlorate solution (50% or less) (0) is not compatible with Groups 1–3, 5, 7, 8, 10, 12, 13, 17 and 20.

Sodium dichromate solution (70% or less) (0) is not compatible with Groups 1–3, 5, 7, 8, 10, 12, 13, 17 and 20.

Sodium dimethyl naphthalene sulfonate solution (34) is not compatible with Group 12, Formaldehyde and strong oxidizing agents.

Sodium hydrogen sulfide (6% or less)/ Sodium carbonate solution (3% or less) (0)

is not compatible with Groups 6 (Ammonia) and 7 (Aliphatic amines).
Sodium hydrosulfide solution (45% or less) (5) is not compatible with Groups 6 (Ammonia) and 7 (Aliphatic amines).
Sodium hydrosulfide, Ammonium sulfide solution (5) is not compatible with Groups 6 (Ammonia) and 7 (Aliphatic amines).
Sodium polyacrylate solution (43) is not compatible with Group 3, Nitric Acid.
Sodium silicate solution (43) is not compatible with Group 3, Nitric Acid.
Sodium sulfide, hydrosulfide solution (0) is not compatible with Groups 6 (Ammonia) and 7 (Aliphatic amines).
Sodium thiocyanate (56% or less) (0) is not compatible with Groups 1–4.
Sulfonated polyacrylate solution (43) is not compatible with Group 5 (Caustics).
Sulfuric acid (2) is not compatible with Fish oil (34), or Oleum (0).
Tall oil fatty acid (Resin acids less than 20%) (34) is not compatible with Group 5, Caustics.
Tallow fatty acid (34) is not compatible with Group 5, Caustics.
Tetraethylenepentamine (7) is not compatible with Carbon tetrachloride, Group 36, Halogenated hydrocarbons.
1, 2, 3-Trichloropropane (36) is not compatible with Diethylenetriamine, Ethylenediamine, Ethyleaneamine EA 1302, or Triethylenetetramine, all Group 7, Aliphatic amines.
1, 1, 1-Trichloroethane (36) is not compatible with Oleum (0).
Trichloroethylene (36) is not compatible with Group 5, Caustics.
Triethylenetetramine (7) is not compatible with Carbon tetrachloride, or 1, 2, 3-Trichloropropane, both Group 36, Halogenated hydrocarbons.
Triethyl phosphite (34) is not compatible with Group 1 (non-oxidizing mineral acids) and Group 4 (Organic acids).
Trimethyl phosphite (34) is not compatible with Group 1 (non-oxidizing mineral acids) and Group 4 (Organic acids).
1, 3, 5-Trioxane (41) is not compatible with Group 1 (non-oxidizing mineral acids) and Group 4 (Organic acids).
Vinyl neodecanoate (13) is not compatible with Group 5, Caustics.

## PART 153—SHIPS CARRYING BULK LIQUID, LIQUEFIED GAS, OR COMPRESSED GAS HAZARDOUS MATERIALS

■ 7. Revise the authority citation for part 153 to read as follows:

**Authority:** 46 U.S.C. 2103, 3703; Department of Homeland Security Delegation No. 0170.1, para. II (92.a), (92.b). Section 153.40 issued under 49 U.S.C. 5103. Sections 153.470 through 153.491, 153.1100 through 153.1132, and 153.1600 through 153.1608 also issued under 33 U.S.C. 1903 (b).

■ 8. Revise Table 2 to part 153, as amended by the interim rule published on August 16, 2013 (78 FR 50148), effective January 16, 2017, as delayed at 79 FR 68132, November 14, 2014, to read as follows:

The cargoes listed in this table are not regulated under subchapter D or O of this title when carried in bulk on non-oceangoing barges. Category X, Y, or Z noxious liquid substance (NLS) cargo, as defined in Annex II of MARPOL 73/78, listed in this table, or any mixture containing one or more of these cargoes, must be carried under this subchapter if carried in bulk on an oceangoing ship.

TABLE 2 TO PART 153—CARGOES NOT REGULATED UNDER SUBCHAPTERS D OR O OF THIS CHAPTER WHEN CARRIED IN BULK ON NON-OCEANGOING BARGES

| Cargoes | Pollution category |
|---|---|
| **Acrylic acid/ethenesulfonic acid copolymer with phosphonate groups, sodium salt solution** | Z. |
| **Aluminum sulfate solution** | **Y**. |
| 2-Amino-2-hydroxymethyl-1,3-propanediol solution | #. |
| Ammonium hydrogen phosphate solution | Z. |
| Ammonium lignosulfonate solutions, *see also* Lignin liquor | Z. |
| Ammonium nitrate solution (45% or less) | #. |
| Ammonium phosphate, urea solution, *see also* Urea, Ammonium phosphate solution | #. |
| Ammonium polyphosphate solution | Z. |
| Ammonium sulfate solution | Z. |
| Ammonium thiosulfate solution (60% or less) | Z. |
| Apple juice | OS. |
| Calcium bromide solution | Z. |
| Calcium carbonate slurry | OS. |
| Calcium chloride solution | Z. |
| Calcium hydroxide slurry | Z. |
| Calcium lignosulfonate solution, *see also* Lignin liquor | Z. |
| **Calcium nitrate solutions (50% or less)** | **Z.** |
| Calcium nitrate/Magnesium nitrate/Potassium chloride solution | Z. |
| Caramel solutions | #. |
| Chlorinated paraffins (C14–C17) (with 50% Chlorine or more, and less than 1% C13 or shorter chains) | X. |
| Chlorinated paraffins (C14–C17) (with 52% Chlorine) | #. |
| 2-Chloro-4-ethylamino-6-isopropylamino-5-triazine solution | #. |
| **4-Chloro-2-methylphenoxyacetic acid, dimethylamine salt solution** | **Y**. |
| Choline chloride solutions | Z. |
| Clay slurry | OS. |
| Coal slurry | OS. |
| *Dextrose solution, see* Glucose solution | |
| Diethylenetriamine pentaacetic acid, pentasodium salt solution | Z. |
| 1,4-Dihydro-9,10-dihydroxy anthracene, disodium salt solution | #. |
| Dodecenylsuccinic acid, dipotassium salt solution | #. |
| Drilling brine (containing Calcium, Potassium, or Sodium salts) (*see also* Potassium chloride solution (10% or more)) | #. |
| Drilling brines, including: Calcium bromide solution, Calcium chloride solution and Sodium chloride solution (if non-flammable and non-combustible). | Z. |
| Drilling brines (containing Zinc salts) | X. |
| Drilling mud (low toxicity) (if non-flammable and non-combustible) | # |
| Ethylene-Vinyl acetate copolymer (emulsion) | Y. |
| Ferric hydroxyethylethylenediamine triacetic acid, trisodium salt solution | #. |
| Fish solubles (water based fish meal extracts) | #. |
| Fructose solution | #. |

TABLE 2 TO PART 153—CARGOES NOT REGULATED UNDER SUBCHAPTERS D OR O OF THIS CHAPTER WHEN CARRIED IN BULK ON NON-OCEANGOING BARGES—Continued

| Cargoes | Pollution category |
|---|---|
| Glucose solution | OS. |
| Glycine, Sodium salt solution | Z. |
| **Glyphosate solution (not containing surfactant)** | **Y**. |
| Hexamethylenediamine adipate solution | #. |
| Hexamethylenediamine adipate (50% in water) | Z. |
| N-(Hydroxyethyl)ethylenediamine triacetic acid, trisodium salt solution | Y. |
| Kaolin clay solution | #. |
| Kaolin slurry | OS. |
| Kraft pulping liquor (free alkali content, 1% or less) *including: Black, Green, or White liquor* | #. |
| Lignin liquor (free alkali content, 1% or less) | Z. |
| *including:* | |
| Ammonium lignosulfonate solutions | Z. |
| Calcium lignosulfonate solutions | Z. |
| Sodium lignosulfonate solution | Z. |
| Ligninsulfonic acid, Sodium salt solution | Z. |
| Magnesium chloride solution | Z. |
| Magnesium hydroxide slurry | Z. |
| Magnesium sulfonate solution | #. |
| **Maltitol solution** | **OS.** |
| **Microsillica slurry** | **OS.** |
| Milk | #. |
| Molasses | OS. |
| Molasses residue (from fermentation) | #. |
| Naphthalenesulfonic acid-Formaldehyde copolymer, sodium salt solution | Z. |
| Naphthenic acid, sodium salt solution | #. |
| **Nitrilotriacetic acid, trisodium salt solution** | **Y**. |
| Noxious liquid, NF, (1) n.o.s. (''trade name'' contains ''principle components'') ST 1, Cat X (if non-flammable and non-combustible). | X. |
| Noxious liquid, NF, (3) n.o.s. (''trade name'' contains ''principle components'') ST 2, Cat X (if non-flammable and non-combustible). | X. |
| Noxious liquid, NF, (5) n.o.s. (''trade name'' contains ''principle components'') ST 2, Cat Y (if non-flammable and non-combustible). | Y. |
| Noxious liquid, NF, (7) n.o.s. (''trade name'' contains ''principle components'') ST 3, Cat Y (if non-flammable and non-combustible). | Y. |
| Noxious liquid, NF, (9) n.o.s. (''trade name'' contains ''principle components'') ST 3, Cat Z (if non-flammable and non-combustible). | Z. |
| Noxious liquid, NF, (11) n.o.s. (''trade name'' contains ''principle components'') Cat Z (if non-flammable and non-combustible) | Z. |
| Noxious liquid, NF, (12) n.o.s. (''trade name'' contains ''principle components'') Cat OS (if non-flammable and non-combustible) | OS. |
| **Orange juice (concentrated)** | **OS**. |
| **Orange juice (not concentrated)** | **OS**. |
| *Pentasodium salt of Diethylenetriamine pentaacetic acid solution, see* Diethylenetriamine pentaacetic acid, pentasodium salt solution. | |
| Polyaluminum chloride solution | Z. |
| *Potassium chloride solution (26% or more), see* Drilling brines, including: Calcium bromide solution, Calcium chloride solution and Sodium chloride solution. | |
| **Potassium chloride solution (less than 26%)** | **OS**. |
| **Potassium formate solutions** | **Z**. |
| **Potassium thiosulfate (50% or less)** | **Y**. |
| Sewage sludge, treated (*treated so as to pose no additional decompositional and fire hazard; stable, non-corrosive, non-toxic, non-flammable).* | #. |
| Silica slurry | #. |
| Sludge, treated (*treated so as to pose no additional decompositional and fire hazard; stable, non-corrosive, non-toxic, non-flammable).* | #. |
| Sodium acetate, Glycol, Water mixture (containing 1% or less Sodium hydroxide) (if non-flammable or non-combustible) | #. |
| Sodium acetate solutions | Z. |
| **Sodium alkyl (C14–C17) sulfonates (60–65% solution)** | **Y**. |
| Sodium aluminosilicate slurry | Z. |
| **Sodium bicarbonate solution (less than 10%)** | **OS**. |
| Sodium carbonate solution | Z. |
| Sodium hydrogen sulfide (6% or less)/Sodium carbonate (3% or less) solution | Z. |
| Sodium lignosulfonate solution, *see also* Lignin liquor | Z. |
| *Sodium naphthenate solution (free alkali content, 3% or less), see* Naphthenic acid, sodium salt solution | |
| Sodium poly(4+)acrylate solutions | Z. |
| Sodium silicate solution | Y. |
| Sodium sulfate solutions | Z. |
| Sodium sulfite solution (25% or less) | Y. |
| Sodium thiocyanate solution (56% or less) | Y. |
| Sorbitol solution | OS. |
| Sulfonated polyacrylate solution | Z. |
| *Tetrasodium salt of Ethylenediaminetetraaacetic acid solution, see* Ethylenediaminetetraacetic acid, tetrasodium salt solution | |

TABLE 2 TO PART 153—CARGOES NOT REGULATED UNDER SUBCHAPTERS D OR O OF THIS CHAPTER WHEN CARRIED IN BULK ON NON-OCEANGOING BARGES—Continued

| Cargoes | Pollution category |
|---|---|
| Titanium dioxide slurry | Z. |
| 1,1,1-Trichloroethane | Y. |
| 1,1,2-Trichloro-1,2,2-trifluoroethane | Y. |
| *Trisodium salt of N-(Hydroxyethyl)ethylenediamine triacetic acid solution, see* N-(Hydroxyethyl)ethylenediamine triacetic acid, trisodium salt solution. | |
| Urea, Ammonium mono-and di-hydrogen phosphate, Potassium chloride solution | #. |
| **Urea/Ammonium nitrate solution** | **Z**. |
| Urea/Ammonium phosphate solution | Y. |
| Urea solution | Z. |
| Vanillan black liquor (free alkali content, 1% or less) | #. |
| Vegetable protein solution (hydrolyzed) (if non-flammable and non-combustible) | OS. |
| Water | OS. |
| *Zinc bromide, Calcium bromide solution, see* Drilling brines (containing Zinc salts) | |

Explanation of Symbols Used in this Table:
X, Y, Z—NLS Category of Annex II of MARPOL 73/78.
#—No determination of NLS status. For shipping on an oceangoing vessel, see 46 CFR 153.900(c).
OS—Other substances, at present considered to present no harm to marine resources, human health, amenities or other legitimate uses of the sea when discharged into the sea from tank cleaning or deballasting operations.
Abbreviations for Noxious liquid substances used in this table:
Cat—Pollution category.
NF—Non-flammable (flash point greater than 60 degrees C (140 degrees F) cc).
n.o.s.—Not otherwise specified.
ST—Ship type.
Entries in bold were added from the March 2012 Annex to the 2007 IBC Code.

Dated: October 13, 2015.

**J.G. Lantz,**

*Director of Commercial Regulations and Standards, U.S. Coast Guard.*

[FR Doc. 2015–26371 Filed 10–21–15; 8:45 am]

BILLING CODE 9110–04–P

# FEDERAL REGISTER

Vol. 80 Thursday,

No. 204 October 22, 2015


Part V

## Environmental Protection Agency

40 CFR Part 98

Greenhouse Gas Reporting Rule: 2015 Revisions and Confidentiality Determinations for Petroleum and Natural Gas Systems; Final Rule

**ENVIRONMENTAL PROTECTION AGENCY**

**40 CFR Part 98**

**[EPA–HQ–OAR–2014–0831; FRL–9935–50–OAR]**

**RIN 2060–AS37**

## Greenhouse Gas Reporting Rule: 2015 Revisions and Confidentiality Determinations for Petroleum and Natural Gas Systems

**AGENCY:** Environmental Protection Agency (EPA).

**ACTION:** Final rule.

**SUMMARY:** The Environmental Protection Agency (EPA) is finalizing revisions and confidentiality determinations for the petroleum and natural gas systems source category of the Greenhouse Gas Reporting Rule. These revisions include the addition of calculation methods and reporting requirements for greenhouse gas (GHG) emissions from gathering and boosting facilities, completions and workovers of oil wells with hydraulic fracturing, and blowdowns of natural gas transmission pipelines between compressor stations. The revisions also include the addition of well identification reporting requirements to improve the EPA's ability to verify reported data and enhance transparency. This action also finalizes confidentiality determinations for new data elements contained in these amendments.

**DATES:** This final rule is effective on January 1, 2016.

**ADDRESSES:** The EPA has established a docket for this action under Docket ID No. EPA–HQ–OAR–2014–0831. All documents in the docket are listed on the *http://www.regulations.gov* Web site. Although listed in the index, some information is not publicly available, *e.g.,* confidential business information (CBI) or other information whose disclosure is restricted by statute. Certain other material, such as copyrighted material, is not placed on the Internet and will be publicly available only in hard copy form. Publicly available docket materials are available electronically through *http://www.regulations.gov.*

**FOR FURTHER INFORMATION CONTACT:** Carole Cook, Climate Change Division, Office of Atmospheric Programs (MC–6207A), Environmental Protection Agency, 1200 Pennsylvania Ave. NW., Washington, DC 20460; telephone number: (202) 343–9263; fax number: (202) 343–2342; email address: *GHGReportingRule@epa.gov.* For technical information, please go to the Greenhouse Gas Reporting Rule Web site, *http://www.epa.gov/ghgreporting/.* To submit a question, select Help Center, followed by ''Contact Us.''

*Worldwide Web (WWW).* In addition to being available in the docket, an electronic copy of this final rule will also be available through the WWW. Following the Administrator's signature, a copy of this action will be posted on the EPA's Greenhouse Gas Reporting Rule Web site at *http://www.epa.gov/ghgreporting/index.html.*

**SUPPLEMENTARY INFORMATION:**

*Regulated Entities.* This final rule adds calculation methods, monitoring, and data reporting requirements and finalizes confidentiality determinations for the petroleum and natural gas systems source category of the Greenhouse Gas Reporting Rule (40 CFR part 98). The Administrator determined that 40 CFR part 98 is subject to the provisions of Clean Air Act (CAA) section 307(d). See CAA section 307(d)(1)(V) (the provisions of section 307(d) apply to ''such other actions as the Administrator may determine''). Entities affected by this final rule are owners and operators of petroleum and natural gas systems that directly emit GHGs, which include those listed in Table 1 of this preamble:

TABLE 1—EXAMPLES OF AFFECTED ENTITIES BY CATEGORY

| Category | NAICS [a] | Examples of affected facilities |
|---|---|---|
| Petroleum and Natural Gas Systems | 211111 | Crude petroleum and natural gas extraction. |
| | 211112 | Natural gas liquid extraction. |
| | 221210 | Natural gas distribution. |
| | 486210 | Pipeline transportation of natural gas. |

[a] North American Industry Classification System.

Table 1 of this preamble is not intended to be exhaustive, but rather provides a guide for readers regarding facilities likely to be affected by this action. Types of facilities other than those listed in the table could also be subject to reporting requirements. To determine whether you are affected by this action, you should carefully examine the applicability criteria found in 40 CFR part 98, subpart A and 40 CFR part 98, subpart W. If you have questions regarding the applicability of this action to a particular facility, consult the person listed in the preceding **FOR FURTHER INFORMATION CONTACT** section.

*What is the effective date?* The final rule is effective on January 1, 2016.

*Judicial Review.* Under CAA section 307(b)(1), judicial review of this final rule is available only by filing a petition for review in the U.S. Court of Appeals for the District of Columbia Circuit (the Court) by December 21, 2015. Under CAA section 307(d)(7)(B), only an objection to this final rule that was raised with reasonable specificity during the period for public comment can be raised during judicial review. Section 307(d)(7)(B) of the CAA also provides a mechanism for the EPA to convene a proceeding for reconsideration, ''[i]f the person raising an objection can demonstrate to the EPA that it was impracticable to raise such objection within [the period for public comment] or if the grounds for such objection arose after the period for public comment (but within the time specified for judicial review) and if such objection is of central relevance to the outcome of the rule.'' Any person seeking to make such a demonstration to us should submit a Petition for Reconsideration to the Office of the Administrator, Environmental Protection Agency, Room 3000, William Jefferson Clinton Building, 1200 Pennsylvania Ave. NW., Washington, DC 20460, with a copy to the person listed in the preceding **FOR FURTHER INFORMATION CONTACT** section, and the Associate General Counsel for the Air and Radiation Law Office, Office of General Counsel (Mail Code 2344A), Environmental Protection Agency, 1200 Pennsylvania Ave. NW., Washington, DC 20004. Note that under CAA section 307(b)(2), the requirements established by this final rule may not be challenged separately in any civil or criminal proceedings brought by the EPA to enforce these requirements.

*Acronyms and Abbreviations.* The following acronyms and abbreviations are used in this document.

AGR acid gas removal

API American Petroleum Institute
BAMM best available monitoring methods
CAA Clean Air Act
CBI confidential business information
CFR Code of Federal Regulations
$CH_4$ methane
$CO_2$ carbon dioxide
$CO_2e$ carbon dioxide equivalent
e-GGRT Electronic Greenhouse Gas Reporting Tool
EPA U.S. Environmental Protection Agency
FERC Federal Energy Regulatory Commission
FR Federal Register
$ft^3$ cubic feet
GHG greenhouse gas
GHGRP Greenhouse Gas Reporting Program
GOR gas to oil ratio
GRI Gas Research Institute
ICR information collection request
ID identification
LDC local distribution company
$N_2O$ nitrous oxide
NAICS North American Industry Classification System
NGO non-government organization
NGPA Natural Gas Policy Act
NTTAA National Technology Transfer and Advancement Act
O&M operation and maintenance
OMB Office of Management and Budget
PHMSA Pipeline and Hazardous Materials Safety Administration
psi/ft pounds per square inch per foot
REC reduced emissions completion
RFA Regulatory Flexibility Act
scf standard cubic feet
scf/STB standard cubic feet per stock tank barrel
U.S. United States
UMRA Unfunded Mandates Reform Act of 1995
WWW worldwide web

*Organization of This Document.* The following outline is provided to aid in locating information in this preamble.

I. Background
A. Organization of This Preamble
B. Background on This Action
C. Legal Authority
D. How do these amendments apply to 2015 and 2016 reports?
II. Summary of Final Revisions and Other Amendments to Subpart W and Responses to Public Comment
A. Summary of Final Amendments for Oil Wells With Hydraulic Fracturing
B. Summary of Final Amendments for the Onshore Petroleum and Natural Gas Gathering and Boosting Segment
C. Summary of Final Amendments for the Onshore Natural Gas Transmission Pipeline Segment
D. Summary of Final Amendments for Well Identification Numbers
E. Summary of Final Amendments to Best Available Monitoring Methods
III. Final Confidentiality Determinations
A. Summary of Final Confidentiality Determinations for New Subpart W Data Elements
B. Summary of Public Comments and Responses on the Proposed Confidentiality Determinations
IV. Impacts of the Final Amendments to Subpart W
A. Impacts of the Final Amendments
B. Summary of Comments and Responses on the Impacts of the Proposed Rule
V. Statutory and Executive Order Reviews
A. Executive Order 12866: Regulatory Planning and Review and Executive Order 13563: Improving Regulation and Regulatory Review
B. Paperwork Reduction Act
C. Regulatory Flexibility Act (RFA)
D. Unfunded Mandates Reform Act (UMRA)
E. Executive Order 13132: Federalism
F. Executive Order 13175: Consultation and Coordination With Indian Tribal Governments
G. Executive Order 13045: Protection of Children From Environmental Health Risks and Safety Risks
H. Executive Order 13211: Actions Concerning Regulations That Significantly Affect Energy Supply, Distribution or Use
I. National Technology Transfer and Advancement Act
J. Executive Order 12898: Federal Actions To Address Environmental Justice in Minority Populations and Low-Income Populations
K. Congressional Review Act

## I. Background

### *A. Organization of This Preamble*

Section I of this preamble provides background information regarding the origin of the final amendments. This section also discusses the EPA's legal authority under the CAA to promulgate and amend 40 CFR part 98 of the Greenhouse Gas Reporting Rule (hereafter referred to as ''part 98'') as well as the legal authority for making confidentiality determinations for the data to be reported. Section II of this preamble contains information on the final amendments to part 98, subpart W (Petroleum and Natural Gas Systems) (hereafter referred to as ''subpart W''), including a summary of the major comments that the EPA considered in the development of this final rule. Section III of this preamble discusses the final confidentiality determinations for new data reporting elements. Section IV of this preamble discusses the impacts of the final amendments to subpart W. Finally, Section V of this preamble describes the statutory and executive order requirements applicable to this action.

### *B. Background on This Action*

The EPA's Greenhouse Gas Reporting Program (GHGRP) requires annual reporting of GHG data and other relevant information from large sources and suppliers in the United States. On October 30, 2009, the EPA published part 98 for collecting information regarding GHG emissions from a broad range of industry sectors (74 FR 56260). Although reporting requirements for petroleum and natural gas systems were originally proposed to be part of part 98 (75 FR 16448; April 10, 2009), the final October 2009 rule did not include the petroleum and natural gas systems source category as one of the 29 source categories for which reporting requirements were finalized. The EPA re-proposed subpart W in 2010 (79 FR 18608; April 12, 2010), and a subsequent final rule was published on November 30, 2010, with the requirements for the petroleum and natural gas systems source category at 40 CFR part 98, subpart W (75 FR 74458) (hereafter referred to as ''the final subpart W rule''). Following promulgation, the EPA finalized actions revising subpart W (76 FR 22825, April 25, 2011; 76 FR 59533, September 27, 2011; 76 FR 80554, December 23, 2011; 77 FR 51477, August 24, 2012; 78 FR 25392, May 1, 2013; 78 FR 71904, November 29, 2013; 79 FR 63750, October 24, 2014; 79 FR 70352, November 25, 2014).

On December 9, 2014, the EPA proposed ''2015 Revisions and Confidentiality Determinations for Petroleum and Natural Gas Systems'' (79 FR 76267) to require the reporting of GHG emissions from several sources that had not previously been included in subpart W. These sources include completions and workovers of oil wells with hydraulic fracturing, petroleum and natural gas gathering and boosting systems, and transmission pipeline blowdowns between compressor stations. The reporting requirements for completions and workovers of oil wells with hydraulic fracturing were proposed to be included as part of the existing Onshore Petroleum and Natural Gas Production industry segment. For the other sources, the EPA proposed two new industry segments: The Onshore Petroleum and Natural Gas Gathering and Boosting segment for petroleum and natural gas gathering and boosting facilities, and the Onshore Natural Gas Transmission Pipeline segment for transmission pipeline blowdowns between compressor stations. The EPA also proposed to require the reporting of a well identification number for oil and gas wells covered in the Onshore Petroleum and Natural Gas Production segment. In addition, the EPA proposed confidentiality determinations for new data elements contained in the proposed amendments. The public comment period for these proposed rule amendments ended on February 24, 2015, following a 2-week extension of the original comment period end date (80 FR 6495; February 5, 2015).

In this action, the EPA is finalizing additions and revisions to the subpart W calculation, monitoring, and reporting requirements for new sources, with some changes made in response to public comments. Responses to comments submitted on the proposed amendments can be found in sections II, III, and IV of this preamble as well as in ''Response to Public Comments on Greenhouse Gas Reporting Rule: 2015 Revisions and Confidentiality Determinations for Petroleum and Natural Gas Systems'' in Docket ID No. EPA–HQ–OAR–2014–0831. As noted in the preamble to the proposed amendments (79 FR 73148; December 9, 2014), these additions and revisions further the EPA's goals of improving the completeness, quality, accuracy, and transparency of data from this sector, and improving the ability of agencies and the public to use these GHG data to analyze emissions and understand emission trends.

The *Strategy to Reduce Methane Emissions* in the President's *Climate Action Plan* summarizes the sources of methane ($CH_4$) emissions, commits to new steps to cut emissions of this potent GHG, and outlines the Administration's efforts to improve the measurement of these emissions. The strategy builds on progress to date and takes steps to further cut $CH_4$ emissions from several sectors, including the oil and natural gas sector. In the strategy, the EPA was tasked to review regulatory requirements to address potential gaps in coverage, improve methods, and help ensure high quality data reporting.[1] The final revisions to subpart W covered in this action are responsive to this task by addressing data gaps in subpart W, specifying methods for measuring $CH_4$ emissions, and providing data that can be used to further analyze $CH_4$ emissions in this industry.

This action also addresses a petition the EPA received from a group of non-government organizations (NGOs) requesting that the EPA collect data from emissions sources not currently included in subpart W, including well completion emissions from oil wells that co-produce natural gas, facilities and pipelines in the gathering and boosting segment, and transmission pipeline blowdown events (''Petition for Rulemaking'').[2] Table 2 of this preamble summarizes how the EPA has responded to the Petition for Rulemaking. These revisions, and previously finalized revisions where noted in Table 2, reflect the EPA's complete response to the Petition for Rulemaking. It is our position that we have fully responded to the NGO petition, however, any requests included in the petition that have not been responded to in Table 2 are considered denied.

TABLE 2—EPA RESPONSE TO PETITION FOR RULEMAKING

| Request in petition | EPA's response | Final rule citations (40 CFR) |
|---|---|---|
| Clarify that oil wells that co-produce natural gas (''co-producing wells''), specifically wells in tight-oil formations like the Bakken and Eagle Ford, are subject to the completion reporting requirements as currently written. Expand the well completion reporting requirements to all wells, ensuring co-producing wells in any formation type are required to report completion emissions. | The EPA is not changing the definition of ''gas well'' or ''oil well.'' Instead, the EPA is amending subpart W to require the reporting of GHG emissions from completions and workovers with hydraulic fracturing for wells in the Onshore Petroleum and Natural Gas Production segment, regardless of whether their primary product is oil or natural gas. | 98.232(c)(6)<br>98.232(c)(8)<br>98.236(g) |
| Require reporting from facilities and pipelines in the gathering and boosting segment of the natural gas industry. | The EPA is finalizing the proposal to amend subpart W to add a new industry segment, Onshore Petroleum and Natural Gas Gathering and Boosting, which covers emissions from equipment used by gathering pipeline systems that move petroleum and natural gas from the well to either larger gathering pipeline systems, natural gas processing plants, natural gas transmission pipelines, or natural gas distribution pipelines. | 98.230(a)(9)<br>98.232(j)<br>98.233 (various)<br>98.236(a)(9) |
| Require reporting from transmission pipeline blowdown events. | The EPA is finalizing the proposal to add reporting requirements for emissions from natural gas transmission pipeline blowdowns between compressor stations in a new Onshore Natural Gas Transmission Pipeline segment. | 98.230(a)(10)<br>98.232(m)<br>98.236(aa)(11) |
| Require reporters to include API well identification numbers along with their submissions to help the public and policymakers understand which sources are reporting and how the threshold may be adjusted to most effectively provide emissions information. | The EPA is requiring the reporting of well identification numbers for the Onshore Petroleum and Natural Gas Production segment for information related specifically to wells. | 98.236(f), (g), (h), (l), and (m)<br>98.238 |
| Phase out the use of best available monitoring methods (BAMM), which will further help to ensure Subpart W data are rigorous, and comprehensive. | Prior to these amendments, BAMM was discontinued for all sources except specific sources that were affected by the amendments finalized on November 25, 2014 (79 FR 70352); those BAMM provisions will be unavailable after December 31, 2015. Reporters will be allowed to use BAMM for the 2016 reporting year for only the new industry segments and emission sources included in this action. The EPA is not allowing the use of BAMM beyond 2016. | 98.234(f) and (g) |

[1] *Climate Action Plan—Strategy to Reduce Methane Emissions.* The White House, Washington, DC, March 2014. Available at *http://www.whitehouse.gov/sites/default/files/strategy_to_reduce_methane_emissions_2014-03-28_final.pdf.*

[2] *Petition for Rulemaking and Interpretive Guidance Ensuring Comprehensive Coverage of Methane Sources Under Subpart W of the Greenhouse Gas Reporting Rule—Petroleum And Natural Gas Systems;* Submitted by Clean Air Task Force, Environmental Defense Fund, Natural Resources Defense Council, and Sierra Club; March 19, 2013. Docket Item No. EPA–HQ–OAR–2014–0831–0005.

TABLE 2—EPA RESPONSE TO PETITION FOR RULEMAKING—Continued

| Request in petition | EPA's response | Final rule citations (40 CFR) |
|---|---|---|
| Consider including advanced innovative monitoring methods as a way to accelerate development and deployment of real-time continuous $CH_4$ emission monitoring in the oil and natural gas sector. | The agency is assessing the potential opportunities for application of remote sensing technologies and other innovations in measurement or monitoring technology to identifying and calculating emissions from affected sources under subpart W and requested comment in the proposal. The EPA received multiple comments in response to the request for comments on the feasibility, possible regulatory approaches, and provisions necessary to incorporate or allow the use of advanced measurement or monitoring methods in subpart W. All of the comments received are included in "Response to Public Comments on Greenhouse Gas Reporting Rule: 2015 Revisions and Confidentiality Determinations for Petroleum and Natural Gas Systems" in Docket ID No. EPA–HQ–OAR–2014–0831. The EPA is not including provisions related to advanced measurement or monitoring methods in this rule and is not responding to these comments in this rulemaking. Instead, following review of the data and information received in comments, the EPA may propose amendments related to the use of innovative technologies in reporting to the GHGRP in a future rulemaking. | |

*Legal Authority*

The EPA is finalizing these rule amendments under its existing CAA authority provided in CAA section 114. As stated in the preamble to the 2009 final GHG reporting rule (74 FR 56260; October 30, 2009), CAA section 114(a)(1) provides the EPA broad authority to require the information to be gathered by this rule because such data would inform and are relevant to the EPA's carrying out a wide variety of CAA provisions. See the preambles to the proposed (74 FR 16448; April 10, 2009) and final GHG reporting rule (74 FR 56260; October 30, 2009) for further information.

In addition, pursuant to sections 114, 301, and 307 of the CAA, the EPA is publishing final confidentiality determinations for the new data elements required by these amendments. Section 114(c) requires that the EPA make information obtained under section 114 available to the public, except for information that qualifies for confidential treatment. The Administrator has determined that this action is subject to the provisions of section 307(d) of the CAA.

*D. How do these amendments apply to 2015 and 2016 reports?*

These amendments are effective on January 1, 2016. Thus, beginning on January 1, 2016, facilities must follow the revised methods in subpart W, as amended, to calculate emissions occurring during the 2016 calendar year (*i.e.,* reporting year 2016). The first annual reports of emissions calculated using the amended requirements will be those submitted by March 31, 2017, covering reporting year 2016. For reporting year 2015, reporters will continue to calculate emissions and other relevant data for the reports that are submitted according to the requirements in part 98 that are applicable to reporting year 2015 (*i.e.,* the requirements in place until the effective date of this final rule).

For reporting year 2016 only, we are allowing the use of best available monitoring methods (BAMM) on a short-term transitional basis for facilities new to reporting under subpart W as well as reporters of facilities subject to new monitoring requirements associated with these revisions. Reporters have the option of using BAMM for only the new industry segments and emission sources included in this action from January 1, 2016, to December 31, 2016, without seeking prior EPA approval. The EPA will not accept requests for an extension for the use of BAMM beyond the time periods listed above. The EPA is not allowing the use of BAMM for the new well identification number provisions in the Onshore Petroleum and Natural Gas Production segment because the well identification number is not a parameter that requires monitoring equipment to be measured and, therefore, does not meet the requirements for BAMM. In addition, reporters should already have well identification numbers readily available for all wells and associated equipment to which this reporting requirement applies. See section II.E of this preamble for more information.

## II. Summary of Final Revisions and Other Amendments to Subpart W and Responses to Public Comment

In this action, the EPA is amending subpart W to require the reporting of GHG emissions from completions and workovers of oil wells with hydraulic fracturing as part of the existing Onshore Petroleum and Natural Gas Production industry segment. The EPA is also adding requirements for two new industry segments: the Onshore Petroleum and Natural Gas Gathering and Boosting segment for petroleum and natural gas gathering and boosting systems, and the Onshore Natural Gas Transmission Pipeline segment for transmission pipeline blowdowns between compressor stations. Finally, the EPA is requiring the reporting of well identification numbers for oil and gas well-specific information (*e.g.,* completions and workovers, associated gas venting and flaring) reported in the Onshore Petroleum and Natural Gas Production segment. The comments received on this rule generally did not dispute the merit of adding these new segments and sources to subpart W, but they did provide a number of suggestions regarding the technical details of monitoring, reporting, and applicability.

Sections II.A through II.E of this preamble describe the requirements and other amendments that we are finalizing in this rulemaking. Section II.A describes the final amendments for the

reporting of GHG emissions from completions and workovers of oil wells with hydraulic fracturing. Section II.B describes the final amendments for the reporting of GHG emissions from sources in the new Onshore Petroleum and Natural Gas Gathering and Boosting segment. Section II.C describes the final amendments for the reporting of GHG emissions from sources in the new Onshore Natural Gas Transmission Pipeline segment. Section II.D describes the requirements for reporting well identification numbers for the Onshore Petroleum and Natural Gas Production segment. Finally, section II.E provides a summary of the final amendments to the best available monitoring method requirements. The amendments described in each section are followed by a summary of the major comments on those amendments and the EPA's responses. See ''Response to Public Comments on Greenhouse Gas Reporting Rule: 2015 Revisions and Confidentiality Determinations for Petroleum and Natural Gas Systems'' in Docket ID No. EPA–HQ–OAR–2014–0831 for a complete listing of all comments and the EPA's responses.

Finally, in the preamble to the proposed rule, the EPA stated that the agency is ''assessing the potential opportunities for applying remote sensing technologies and other innovations in measurement or monitoring technology to identifying and calculating emissions from affected sources under subpart W'' (79 FR 73148; December 9, 2014). The EPA did not propose, and therefore is not finalizing, any amendments to subpart W to this effect, but the EPA did request comment on the feasibility, possible regulatory approaches, provisions necessary to incorporate or allow the use of advanced measurement or monitoring methods in subpart W, and methods to ensure compliance with those provisions in an efficient manner. The EPA also requested comment on the memorandum ''Discussion Paper on Potential Implementation of Alternative Monitoring under the GHGRP'' in Docket ID No. EPA–HQ–OAR–2014–0831. All of the comments received are included in ''Response to Public Comments on Greenhouse Gas Reporting Rule: 2015 Revisions and Confidentiality Determinations for Petroleum and Natural Gas Systems'' in Docket ID No. EPA–HQ–OAR–2014–0831. The EPA will consider these comments in the context of any future action related to alternative monitoring.

The amendments in this action will advance EPA's goal of maximizing rule effectiveness. For example, these amendments provide clear monitoring, calculation and reporting requirements for new segments and sources in subpart W, thus enabling government, regulated entities, and the public to easily identify and understand rule requirements. In addition, specific changes such as increasing the flexibility and time period for transitional BAMM will make compliance easier than non-compliance.

These amendments will also improve the EPA's ability to assess compliance by adding reporting elements that allow the EPA to more thoroughly verify greenhouse gas data and understand trends in emissions. For example, the requirement for the Onshore Petroleum and Natural Gas Production segment to report well identification numbers will allow the EPA to link GHGRP data with other data sources and assess the completeness and representativeness of the data collected relative to all activity in the U.S. oil and gas production sector. Lastly, these amendments further advance the ability of the GHGRP to provide access to quality data on greenhouse gas emissions by adding key petroleum and natural gas emission sources to this program. One example is the addition of the Onshore Petroleum and Natural Gas Gathering and Boosting segment, a significant greenhouse gas emissions segment that had not been previously covered under the GHGRP.

### *A. Summary of Final Amendments for Oil Wells With Hydraulic Fracturing*

#### 1. Summary of Final Amendments

The EPA is amending subpart W to require the reporting of GHG emissions from completions and workovers with hydraulic fracturing for wells in the Onshore Petroleum and Natural Gas Production segment, regardless of whether their primary product is oil or natural gas. In general, commenters supported inclusion of emissions from completions and workovers of oil wells with hydraulic fracturing in subpart W, and a few commenters provided targeted technical edits and suggestions for this source. Consistent with the requirements for completions and workovers of gas wells with hydraulic fracturing, and consistent with the proposed requirements, the new provisions include the reporting of activity data on the number of completions and workovers of oil wells with hydraulic fracturing and on the use of flaring and reduced emission completions (RECs). In response to public comments, the final monitoring and reporting amendments do not apply to completions and workovers of oil wells with hydraulic fracturing that have a gas to oil ratio (GOR) of less than 300 standard cubic feet per stock tank barrel (scf/STB).

The EPA is also amending the equations and definitions in 40 CFR 98.233(g) to reflect applicability to completions and workovers of all gas and oil wells with hydraulic fracturing. As in the proposal, the final amendments require the use of either Equation W–10A or W–10B for calculating GHG emissions from completions and workovers of oil wells with hydraulic fracturing. Equation W–10A is used to calculate emissions from wells using inputs obtained from a representative sample of wells within a sub-basin and the ratio of the gas flowback rate to the production flow rate, and Equation W–10B is used to calculate emissions using inputs obtained from all wells within a sub-basin and the flow rate and flow volume of the gas vented or flared. As proposed, the EPA is finalizing that emissions be calculated and reported separately for gas wells and oil wells by sub-basin and well type combination.[3] Furthermore, as proposed, the final amendments require the use of Calculation Method 1 for calculating inputs to Equations W–12A and W–12B for oil wells. Calculation Method 1 relies on direct measurement of gas flow rate during flowback to develop calculation inputs; the requirements for the location of the flow meter used to measure the gas flow rate for oil wells are the same as the location requirements for gas wells. Other provisions that apply to completions and workovers of gas wells with hydraulic fracturing also apply to completions and workovers of oil wells with hydraulic fracturing, including the determination of wells that constitute a representative sample for use in Equation W–10A.

For oil wells that do not meter gas production, such as some wells with a relatively low GOR, the EPA is adding a new Equation W–12C as proposed to calculate, rather than measure, the value of $PR_{s,p}$ (the average gas production flow rate during the first 30 days of production after the completion or workover), which is used as an input to Equation W–10A. In this Equation W–12C, the value of $PR_{s,p}$ is calculated by multiplying the GOR of the well by the measured oil production rate over the

[3] Within subpart W, an individual well is labeled an ''oil well'' or ''gas well'' depending on the formation type reported for that well. If wells produce from more than one formation type, then the well is classified into only one type based on the formation type with the most contribution to production as determined by the reporter's engineering knowledge. See the definition of ''Sub-basin category, for onshore natural gas production'' in 40 CFR 98.238.

first 30 days of production after the completion or workover.

2. Summary of Comments and Responses

*Comment:* Several commenters responded to the EPA's request for comment on whether to establish a minimum GOR threshold such that oil wells with a very low GOR would not be subject to the monitoring and reporting requirements for GHG emissions from completions and workovers with hydraulic fracturing. Most of these commenters supported establishment of a cutoff for wells with very low emissions. One commenter urged the EPA to require monitoring and reporting for all completions and workovers with hydraulic fracturing but stated that if a threshold is set, it should be set at a level that ensures that all significant emissions sources are included and that sources are able to clearly determine whether they are required to report. Three commenters supported setting a minimum GOR threshold. One commenter suggested a minimum GOR threshold of 300 and stated that, based on industry experience, oil wells with GOR values less than 300 do not have sufficient gas to operate a separator. The second commenter agreed that operators should only have to monitor and report emissions if the GOR is great enough to operate a separator and direct measurement is possible. The third commenter supporting a minimum GOR threshold did not provide a suggestion for a specific numeric threshold but stated that the emissions from wells with a low GOR are insignificant, and the time and resources involved in measuring the flowback and reporting emissions for wells expected to have minimal emissions would outweigh any contribution of these emissions to the overall source category totals. This commenter supported the inclusion of a threshold so that only significant sources of emissions would be included.

*Response:* The EPA agrees that including a minimum GOR threshold will help minimize reporting burden while still capturing most of the emissions from this source. Energy Information Administration data show that the number of ''oil only'' wells drilled from 2007–2012 was less than 20 percent of all new wells.[4] These wells would have a GOR approaching zero and, therefore, would be expected to have low emissions. We believe that having no threshold may create an unnecessary burden for operators to report emissions for these wells with just a trace of gas. Given that the EPA is finalizing the proposed requirement that the oil well flow meter be located downstream of the separator, the separator must be operating for the owner or operator to be able to measure the flow rate and estimate emissions from completions and workovers of oil wells with hydraulic fracturing. One commenter, an industry trade association, suggested a threshold of 300 scf/STB based on the industry trade association's experience that separators typically do not operate at a GOR less than 300 scf/STB.

The primary concern when determining the level for a threshold is volatility; the threshold must be low enough that the oil produced is considered non-volatile. Non-volatile ''black oils'' (*i.e.,* oil likely to not have gases or light hydrocarbons associated with it) are generally defined as having GOR values in the range of 200 to 900 scf/STB.[5] Oil wells with a GOR less than the 300 scf/STB suggested by the commenter are at the lower end of this range, and completions and workovers with hydraulic fracturing of these wells will not likely have enough gas associated that can be separated. Therefore, the final monitoring and reporting requirements do not apply to completions and workovers of oil wells with hydraulic fracturing that have a GOR of less than 300 scf/STB.

*Comment:* Several commenters responded to the EPA's request for comment on whether to establish a minimum well pressure threshold such that oil wells with a very low well pressure would not be subject to the monitoring and reporting requirements for GHG emissions from completions and workovers with hydraulic fracturing. Most of these commenters supported establishment of a cutoff for wells with very low well pressure. One commenter urged the EPA to require monitoring and reporting for all completions and workovers with hydraulic fracturing but stated that if a threshold is set, it should be set at a level that ensures that all significant emissions sources are included and that sources are able to clearly determine whether they are required to report. Three commenters supported setting a minimum well pressure threshold. One commenter suggested a minimum well pressure threshold of 0.4645 pounds per square inch per foot (psi/ft) because this is the vertical pressure gradient needed for a well to flow back, based on experience with the Natural Gas STAR program. The second commenter suggested that operators should only have to monitor and report emissions if the pressure of the reservoir during oil well completions and workovers is greater than the pressure gradient of 0.433 psi/ft and noted that the pressure needed varies based on the density of the materials in the column and the depth of the well. The third commenter supporting a minimum well pressure threshold did not provide a suggestion for a threshold but supported the inclusion of a threshold so that only significant sources of emissions would be included.

*Response:* The EPA evaluated the commenters' suggestions and has decided not to include a minimum well pressure threshold. Both commenters who suggested a specific value noted in their comments that these pressure gradients are the minimum needed for the well to produce. In other words, according to the commenters' rationale, wells with pressures below the suggested pressure thresholds would not have any production, regardless of whether a threshold is included in the final rule. As a result, specifying that reporting of emissions from completions and workovers of oil wells with hydraulic fracturing is not required below those pressures is redundant. Therefore, the final rule does not include a minimum well or reservoir pressure threshold for completions and workovers of oil wells with hydraulic fracturing.

*B. Summary of Final Amendments for the Onshore Petroleum and Natural Gas Gathering and Boosting Segment*

The EPA is amending subpart W to add a new industry segment, Onshore Petroleum and Natural Gas Gathering and Boosting, that covers emissions from equipment used by gathering pipeline systems that move petroleum and natural gas from the well to either larger gathering pipeline systems, natural gas processing plants, natural gas transmission pipelines, or natural gas distribution pipelines. A gathering and boosting system is a single network of pipelines, compressors and process equipment, including equipment to perform natural gas compression, dehydration, and acid gas removal, that has one or more well-defined connection points to gas and oil production and a well-defined downstream endpoint, typically a gas

[4] In this analysis, all hydrocarbon production in the liquid state at the wellhead was considered oil. J. Lieskovsky and S. Gorgen. ''Drilling often results in both oil and natural gas production.'' *Today in Energy,* U.S. Energy Information Administration, October 29, 2013. *http://www.eia.gov/todayinenergy/detail.cfm?id=13571.* Accessed June 9, 2015.

[5] M.P. Walsh. ''Oil Reservoir Primary Drive Mechanisms.'' In *Petroleum Engineering Handbook, Volume V: Reservoir Engineering and Petrophysics,* E.D. Holstein (Ed.), L.W. Lake (Ed. in Chief), pp. V–895–980. Society of Petroleum Engineers, 2007.

processing plant or transmission pipeline. Gathering pipelines are pipelines used to transport gas from the furthermost downstream point in an onshore production facility to certain endpoints, generally either a gas processing facility or point of connection to a transmission pipeline. Compressors located along the gathering and boosting system are used to control or ''boost'' the pressure of the gas in the pipeline and keep the gas moving downstream. Commenters generally supported inclusion of gathering and boosting system emissions in subpart W, and many commenters suggested targeted revisions concerning definitions, what emission sources should be included in the segment and methods for individual emission sources.

The remainder of this section describes the final reporting requirements for this new industry segment, including the segment description, definitions, calculation methods, and information to be reported. The amendments described in each section are followed by a summary of the major comments, if any, on those amendments and the EPA's responses. See ''Response to Public Comments on Greenhouse Gas Reporting Rule: 2015 Revisions and Confidentiality Determinations for Petroleum and Natural Gas Systems'' in Docket ID No. EPA–HQ–OAR–2014–0831 for a complete listing of all comments and the EPA's responses.

1. Segment Description for the Onshore Petroleum and Natural Gas Gathering and Boosting Segment

a. Summary of Final Amendments

The EPA is finalizing the definition of the Onshore Petroleum and Natural Gas Gathering and Boosting segment in 40 CFR 98.230 as gathering pipelines and other equipment used to collect petroleum and/or natural gas from onshore production gas or oil wells and used to compress, dehydrate, sweeten, or transport the petroleum and/or natural gas to a natural gas processing facility, a natural gas transmission pipeline, or a natural gas distribution pipeline. Gathering and boosting equipment includes, but is not limited to, gathering pipelines, separators, compressors, acid gas removal (AGR) units, dehydrators, pneumatic devices/pumps, storage vessels, engines, boilers, heaters, and flares. The Onshore Petroleum and Natural Gas Gathering and Boosting segment does not include equipment and pipelines that are reported under any other industry segment defined in subpart W. The segment definition is being finalized as proposed, except that the final amendments provide two clarifications regarding gathering pipelines. First, gathering pipelines operating on a vacuum are not included because they would not be expected to have emissions. Second, to address comments regarding the inclusion of liquid and multiphase streams in the segment, the definition clarifies that gathering pipelines with a GOR less than 300 scf/STB are not a part of the segment.

b. Summary of Comments and Responses

*Comment:* Commenters requested that the EPA remove ''Petroleum and'' from the proposed segment name, ''Onshore Petroleum and Natural Gas Gathering and Boosting.'' The commenters asserted that the removal would provide a clear demarcation between onshore petroleum and natural gas production and onshore natural gas gathering and boosting. They also stated that such a change would be more consistent with the segment definition, which includes pipelines and equipment ''used to compress, dehydrate, sweeten, or transport the gas to a natural gas processing facility, a natural gas transmission pipeline or to a natural gas distribution pipeline.'' The commenter stated that the type of equipment included in the gathering and boosting segment is ''synonymous'' with gas gathering and boosting systems, not liquid or petroleum, and they noted that the emission factor for equipment leaks from gathering pipelines is not applicable to gathering pipelines that carry mostly liquid.

Commenters also specifically requested that the EPA exclude petroleum gathering pipelines from the gathering and boosting segment because the fugitive gas emissions from these gathering pipelines would be negligible. Both commenters stated that the proposed emission factor for gathering pipeline leaks is only applicable to gas gathering pipelines. Two commenters also requested that multi-phase flow lines from wells to a centralized production facility where initial separation occurs be retained in the Onshore Petroleum and Natural Gas Production segment rather than included in the new gathering and boosting segment.

*Response:* The EPA is finalizing the segment name as proposed and not removing ''Petroleum and'' from the segment name or moving multiphase gathering pipelines to the Onshore Petroleum and Natural Gas Production segment. We proposed including ''Petroleum and'' in the segment name to reflect the complex nature of upstream operations where wells can produce oil, natural gas, or a mixture of both and to signify the inclusion of GHG emissions from gathering and boosting systems moving high volatility liquids in this new segment. Even in wells that produce primarily liquids at surface temperature and pressure conditions, there is often a volatile gaseous component. This associated gas is usually considered wet due to the high content of natural gas liquids (volatile components) to go along with gaseous $CH_4$. Similarly, the inclusion of all petroleum gathering pipelines in the Onshore Petroleum and Natural Gas Gathering and Boosting segment, including multiphase pipelines, is appropriate, because gathering lines are a key component to gathering and boosting systems. Therefore, all gathering pipelines that collect petroleum and/or natural gas from onshore production gas or oil wells and transport the petroleum and/or natural gas to a natural gas processing facility, a natural gas transmission pipeline or to a natural gas distribution pipeline are considered part of the final Onshore Petroleum and Natural Gas Gathering and Boosting segment.

However, the EPA does agree that gathering pipelines carrying mostly oil have a low potential for GHG emissions. We note that the ratio of $CH_4$ to volatile components increases as the GOR increases. Therefore, to clarify our intent to exclude gathering pipelines containing oil, the final rule clarifies that the Onshore Petroleum and Natural Gas Gathering and Boosting segment does not include gathering pipelines with a GOR of less than 300 scf/STB. Operators of gathering pipelines below that threshold are not required to include those pipelines in their gathering and boosting facility. See section II.B.5 of this preamble for additional discussion.

Finally, as part of evaluating this comment, the EPA reviewed the proposed definitions related to the Onshore Petroleum and Natural Gas Gathering and Boosting segment and recognizes that two of them referred to ''the gas'' rather than ''the petroleum and/or natural gas.'' One was the proposed description of the Onshore Petroleum and Natural Gas Gathering and Boosting segment in 40 CFR 98.230, as identified by the commenters, and the other was the definition of ''gathering and boosting system owner or operator'' in 40 CFR 98.238. For consistency throughout the final rule with the intent stated in this response, the final description of the Onshore

Petroleum and Natural Gas Gathering and Boosting segment in 40 CFR 98.230 refers to ''petroleum and/or natural gas'' and the final definition of ''gathering and boosting system owner or operator'' in 40 CFR 98.238 refers to ''the petroleum or natural gas transported.''

*Comment:* One commenter stated that there may be confusion regarding which equipment should be reported in the different industry segments, which could lead to emissions being mistakenly excluded or double-counted. For example, gathering and boosting equipment located on a single well pad or associated with a single well pad could be double-counted, especially if it is operated by one entity but owned by another. The commenter also noted that confusion over the proper segment for this type of equipment could make the difference between reporting emissions or not reporting emissions if a facility is close to the reporting threshold of 25,000 metric tons carbon dioxide equivalent ($CO_2e$). Therefore, the commenter requested that the EPA incorporate by reference the U.S. Department of Transportation's Pipeline and Hazardous Materials Safety Administration (PHMSA) federally defined boundaries of production, gathering and boosting, and transmission segments to ensure state/federal transparency and consistency.

*Response:* The EPA is not changing the segment description for the Onshore Petroleum and Natural Gas Production segment in 40 CFR 98.230(a)(2) or the Onshore Natural Gas Processing segment in 40 CFR 98.230(a)(3). As stated at proposal, the EPA decided not to make any changes to the existing segment descriptions to provide consistency for reporters in that segment. This decision allows the EPA to ensure that the data gap in subpart W related to gathering and boosting systems is addressed while minimizing confusion over changes to other segments. Instead, the EPA is reiterating the intention for the Onshore Petroleum and Natural Gas Gathering and Boosting segment to cover equipment and emission sources not included in reporting for the existing Onshore Petroleum and Natural Gas Production or Onshore Natural Gas Processing segments.

The EPA does not agree that emissions from the same equipment will be reported under more than one industry segment in a given reporting year; however, we acknowledge that similar equipment may exist in adjacent industry segments as defined in subpart W. The owner or operator of the equipment in question should first determine if that equipment is subject to reporting in another segment of subpart W, such as the Onshore Petroleum and Natural Gas Production or Onshore Natural Gas Processing segments. If the equipment is not subject to reporting in another segment of subpart W, then the owner or operator should evaluate whether or not the equipment is included in the Onshore Petroleum and Natural Gas Gathering and Boosting source category. For example, if a gathering and boosting owner or operator also owns or operates equipment on or associated with a single well pad (40 CFR 98.230(a)(2)), that equipment is part of the Onshore Petroleum and Natural Gas Production segment, not the Onshore Petroleum and Natural Gas Gathering and Boosting segment. Therefore, emissions from that equipment should not be included when determining if the gathering and boosting facility exceeds the reporting threshold.

*Comment:* One commenter requested that the EPA clarify the proper segment for AGR units and revise the rule accordingly. The commenter suggested that the Natural Gas Processing segment should explicitly exclude sulfur dioxide and carbon dioxide ($CO_2$) removal units, so that it is clear that those units do not report under both the Natural Gas Processing segment and the Onshore Petroleum and Natural Gas Gathering and Boosting segment. The commenter stated that this revision would be more consistent with the definition of gas processing plant in other EPA rules. If the EPA does not make this change, the commenter stated that AGR units should not be included in the Onshore Petroleum and Natural Gas Gathering and Boosting segment because they are already included in the Natural Gas Processing segment. The commenter noted that AGR units are specifically defined in 40 CFR 98.238 as a process unit that separates hydrogen sulfide and/or $CO_2$ from sour natural gas using liquid or solid absorbents or membrane separators.

*Response:* The EPA agrees that emissions from a particular acid gas removal unit should not be reported under both the Natural Gas Processing segment and the Onshore Petroleum and Natural Gas Gathering and Boosting segment. However, as noted previously in this preamble, the EPA is not changing the segment description for the Onshore Petroleum and Natural Gas Production segment in 40 CFR 98.230(a)(2) or the Onshore Natural Gas Processing segment in 40 CFR 98.230(a)(3). Instead, the EPA is reiterating the intention for the Onshore Petroleum and Natural Gas Gathering and Boosting segment to cover equipment and emission sources not included in reporting for the Onshore Petroleum and Natural Gas Production or Onshore Natural Gas Processing segments. The final segment description for the Onshore Petroleum and Natural Gas Gathering and Boosting segment in 40 CFR 98.230(a)(10) specifies that gathering and boosting equipment does not include equipment reported under any other industry segment defined in 40 CFR 98.230(a), which should address the commenter's concern about reporting under multiple segments.

Regarding the commenter's suggestion to exclude AGR units from the Onshore Petroleum and Natural Gas Gathering and Boosting segment, the EPA believes AGR units should be reported under subpart W and that the current requirements, coupled with the revisions in this rulemaking, allow for a clear demarcation of where they should be included and reported. While most AGR units will be included in the Onshore Natural Gas Processing segment, the EPA does not agree that the Onshore Natural Gas Processing segment includes all AGR vents, particularly those in processes that do not fractionate gas liquids with an annual average throughput of less than 25 million scf per day. Therefore, the final Onshore Petroleum and Natural Gas Gathering and Boosting segment includes AGR vents that do not meet the segment descriptions for the Onshore Petroleum and Natural Gas Production segment in 40 CFR 98.230(a)(2) or the Onshore Natural Gas Processing segment in 40 CFR 98.230(a)(3) but do meet the Onshore Petroleum and Natural Gas Gathering and Boosting segment description in 40 CFR 98.230(a)(10).

2. Definitions

a. Summary of Final Amendments

The EPA is finalizing the definition of ''gathering and boosting system'' as proposed and is finalizing the definition of ''gathering and boosting system owner or operator'' as proposed with a clarification that the fluid being transported may be petroleum or natural gas. Specifically, a gathering and boosting system is a single network of pipelines, compressors and process equipment, including equipment to perform natural gas compression, dehydration, and acid gas removal, that has one or more connection points to gas and oil production and a downstream endpoint, typically a gas processing plant, transmission pipeline, local distribution company (LDC) pipeline, or other gathering and boosting system. A gathering and

boosting system owner or operator is any person that: (1) Holds a contract in which they agree to transport petroleum or natural gas from one or more onshore petroleum and natural gas production wells to a natural gas processing facility, another gathering and boosting system, a natural gas transmission pipeline, or a distribution pipeline; or (2) is responsible for custody of the petroleum or natural gas transported. In complex ownership scenarios, the owner/operator assigns a designated representative responsible for reporting consistent with 40 CFR 98.4.

The EPA is also finalizing the definition of ''facility with respect to onshore petroleum and natural gas gathering and boosting'' in 40 CFR 98.238 as proposed. A facility with respect to onshore petroleum and natural gas gathering and boosting is all gathering pipelines and other equipment located along those pipelines that are under common ownership or common control by a gathering and boosting system owner or operator and that are located in a single hydrocarbon basin as defined in 40 CFR 98.238. Where a person owns or operates more than one gathering and boosting system in a basin (for example, separate gathering lines that are not connected), then all gathering and boosting systems and equipment that the person owns or operates in the basin are considered one facility. Any gathering and boosting equipment that is associated with a single gathering and boosting system, including leased, rented, or contracted activities, is considered to be under common control of the owner or operator of the gathering and boosting system. Emissions from an onshore petroleum and natural gas gathering and boosting facility only need to be reported if the collection of emission sources emits 25,000 metric tons $CO_2e$ or more per year.

b. Summary of Comments and Responses

*Comment:* Multiple commenters provided comments on the definition of ''facility with respect to onshore petroleum and natural gas gathering and boosting.'' Some commenters supported the basin-level approach that the EPA proposed, although a few asked the EPA to clarify how to report their emissions if their gathering and boosting system is in more than one basin. Other commenters disagreed with the basin-level approach and suggested that the EPA should use the definition of facility in 40 CFR 98.6. These commenters asserted that the basin-level approach would result in an expansive definition of facility that includes huge numbers of emissions sources and that this approach is not consistent with how a facility is defined elsewhere in the GHGRP or with traditional notions of aggregation under the CAA. One commenter asserted that defining a facility in a way that is not consistent with other CAA programs will make it difficult for the EPA to use the GHGRP data to inform future policy decisions. The commenter also stated that the EPA has not provided any explanation of why basin-wide aggregation is a reasonable data request under section 114 of the CAA.

Commenters opposing the basin-level facility definition noted that the Onshore Petroleum and Natural Gas Gathering and Boosting segment has very different characteristics from the Onshore Petroleum and Natural Gas Production segment, which also uses the basin-level approach to defining a facility. One commenter specifically noted that production sources are located at well-defined, discrete locations, owners and operators of production sites know where the wells are physically located and how many operate in a single production basin. In contrast, the commenter stated, the gathering and boosting operations of one owner or operator in a single hydrocarbon basin may include hundreds or thousands of miles of pipelines with multiple sites, including interconnects, meter stations, scrubber stations, pigging stations, compressor stations, and gas treating plants. Another commenter stated that gathering and boosting sites have the ability to boost and move gas from multiple basins within the same site, whereas production typically maintains operations and moves gas within one basin.

Another commenter also disagreed with the basin-level approach, noting that the term ''basin'' is not common terminology that is used in the gathering and boosting industry segment. The commenter suggested that the EPA use a county- or parish-level approach with an equipment threshold (to determine which equipment should be counted when determining if the 25,000 metric tons $CO_2e$ reporting threshold has been exceeded).

*Response:* The EPA is finalizing the definition of ''facility with respect to onshore petroleum and natural gas gathering and boosting'' as proposed. As noted in the preamble to the proposed amendments, the basin-level approach to defining a facility for the Onshore Petroleum and Natural Gas Gathering and Boosting segment is expected to achieve a balance of providing geographically specific information while also reducing burden on reporters. This approach also recognizes the fact that gathering and boosting facilities are more dispersed than processing facilities and are geographically similar to the Onshore Petroleum and Natural Gas Production segment in size and number of sources because, by their nature, they are needed to process and transport the petroleum and natural gas produced in a given basin. While some gathering and boosting operations may span multiple basins or may only be present in a portion of a basin, as will some onshore production operations, the EPA has concluded that a basin-level facility definition is the best reflection of how this industry is organized operationally.

In ''Greenhouse Gas Reporting Rule: Technical Support for 2015 Revisions and Confidentiality Determinations for Petroleum and Natural Gas Systems; Proposed Rule'' (Docket Item No. EPA–HQ–OAR–2014–0831–0018), we evaluated the option of using the definition of ''facility'' found in 40 CFR 98.6 for gathering and boosting facilities, and we found that this definition would provide limited data on the proposed Onshore Petroleum and Natural Gas Gathering and Boosting segment compared to the basin-level approach, due to the fact that fewer facilities would exceed the 25,000 metric tons $CO_2e$ reporting threshold. It would also likely be more burdensome overall to reporters, because a larger number of facilities would have to be evaluated to determine whether they exceed the 25,000 metric tons $CO_2e$ reporting threshold, and a larger number of ''facility'' reports would be required for each owner or operator. The commenters did not provide any new information that would enable us to re-evaluate this conclusion. A county- or parish-level approach would similarly result in a larger number of smaller facilities to be evaluated to determine whether they exceed the reporting threshold than the basin-level approach. This approach would result in fewer facilities reporting than a basin-level definition, especially if an equipment threshold were defined as requested by the commenter, as well as a higher burden for owners or operators with multiple facilities in a basin that exceed the 25,000 metric tons $CO_2e$ reporting threshold. Therefore, the EPA concluded that these options would not achieve the goals that were articulated in the preamble to the proposed rule of ''having a thorough data set and transparent, complete information for this sector while minimizing burden to reporters'' (79 FR 73156; December 9,

2014). For more detail on this analysis, see ''Greenhouse Gas Reporting Rule: Technical Support for Final 2015 Revisions and Confidentiality Determinations for Petroleum and Natural Gas Systems'' in Docket ID No. EPA–HQ–OAR–2014–0831. We disagree with the comment that aggregation of data would not provide a data set that the EPA can use to inform future policy decisions. The purpose of this rule is to collect emissions and activity data for this industry and understand the relative emission sources, which we anticipate the aggregated data will help to promote. Therefore, the aggregated data can still inform future GHG policy. As we have pointed out previously, the EPA's definition of ''facility'' for purposes of part 98 in no way impacts the ''facility'' definition for similar sources under existing CAA programs.[6] Information collected under part 98 can inform a number of different CAA programs and the Agency's authority under CAA section 114 as the basis for part 98 is independent from the EPA's authority for other CAA programs.

To address the commenters' question about reporting a system in two basins, we are confirming in this response that reporters should submit one report per basin (*i.e.,* per facility as it is defined in subpart W) and that the 25,000 metric tons $CO_2e$ per year reporting threshold applies to each basin/facility separately. In other words, the reporter should determine the emissions from the portion of gathering and boosting system associated with each basin. If the total emissions in each basin exceed the 25,000 metric tons $CO_2e$ per year reporting threshold, then the reporter submits two reports. If the total emissions in one basin exceed the 25,000 metric tons $CO_2e$ threshold, but the emissions in the other basin are below the threshold, then the reporter submits one report (for the facility that exceeds the threshold).

Regarding the commenter's question regarding the reasonableness of collecting data at the basin-level under the CAA, the EPA established its basis for collecting basin-level data in the final subpart W rule, when the EPA finalized the requirements for the Onshore Petroleum and Natural Gas Production segment. Additionally, as noted earlier in this section, more granular collection of data for this segment would result in higher burden for owners or operators with multiple operations in a basin that exceed the 25,000 metric tons $CO_2e$ reporting threshold. See also, ''Greenhouse Gas Emissions Reporting from the Petroleum and Natural Gas Industry, Background Technical Support Document (Docket Item No. EPA–HQ–OAR–2009–0923–3610) and ''Mandatory Greenhouse Gas Reporting Rule Subpart W—Petroleum and Natural Gas: EPA's Response to Public Comments'' (Docket Item No. EPA–HQ–OAR–2009–0923–3608).

3. Blowdown Vent Stacks

a. Summary of Final Amendments

The EPA is finalizing the requirements for blowdowns of equipment in the Onshore Petroleum and Natural Gas Gathering and Boosting segment with some clarifications from proposal. Emissions should be calculated using the same methods that are used for the Onshore Natural Gas Processing segment. The same exemptions, including those for volumes less than 50 cubic feet ($ft^3$) and for desiccant dehydrator reloading, apply to the Onshore Petroleum and Natural Gas Gathering and Boosting segment. In response to comments that the segment is geographically dispersed and blowdowns may occur without personnel on-site or nearby, making it difficult to determine emissions from a blowdown event, the final amendments specify that for emergency blowdowns, reporters may use engineering estimates based on best available information to determine the temperature and pressure used in Equation W–14A.

b. Summary of Comments and Responses

*Comment:* Commenters stated that the EPA should not include reporting of blowdown vent stack emissions due to the large burden on the reporter. Instead, the commenters stated, blowdowns in the Onshore Petroleum and Natural Gas Gathering and Boosting segment should be treated similarly to blowdowns in the Onshore Petroleum and Natural Gas Production segment, where they are excluded because they are not located at consolidated facility sites and are not manned. Commenters also stated that blowdowns from gathering and boosting systems contribute minimally to overall GHG emissions. One commenter noted that while there is an exemption for any blowdown of a volume less than 50 $ft^3$, there is also a burden to determine if the physical volume meets this reporting threshold. To reduce the burden, some commenters suggested only including emissions from blowdown vent stacks located at a facility site (*e.g.,* compressor station, central tank battery). Other commenters stated if blowdowns remain in the segment, the EPA should allow reporters to use an emission factor approach to calculate emissions. Another commenter stated that the EPA's supporting documentation focuses on gathering pipeline blowdowns, but the regulatory text appears to include all the blowdowns occurring within a basin, including individual equipment blowdowns. The commenter requested that the EPA clarify its intent if blowdowns remain in the segment.

*Response:* The EPA has evaluated these comments and has decided to finalize the reporting requirements for blowdowns in the Onshore Petroleum and Natural Gas Gathering and Boosting segment with some revisions to address the commenters' concerns. While the EPA does recognize that many gathering and boosting systems are geographically dispersed, as noted by the commenters, the nature of the Onshore Petroleum and Natural Gas Gathering and Boosting segment is such that the amount of fluid passing through a gathering and boosting system will be much greater than the amount of fluid at individual well pads. Therefore, the EPA has determined that the potential for emissions from blowdowns in the Onshore Petroleum and Natural Gas Gathering and Boosting segment is higher than blowdowns in the Onshore Petroleum and Natural Gas Production segment, and they should not be excluded. However, the EPA acknowledges that the geographic dispersion of the segment, and the fact that some blowdowns occur without facility personnel on site, may make it difficult to measure emissions from blowdowns, particularly emergency blowdowns. Therefore, the final amendments include a provision specifying that for emergency blowdowns, reporters may use engineering estimates based on best available information to determine the temperature at actual conditions in the unique physical volume and absolute pressure at actual conditions in the unique physical volume for use in Equation W–14A.

To respond to the commenter's request regarding whether only gathering pipeline blowdowns or all equipment blowdowns should be included, the EPA is clarifying that the intent is to include emissions from the ''blowdown vent stacks'' source type as defined in subpart A of part 98. The focus on blowdown vent stacks located on gathering pipelines in the supporting documentation was not intended to imply that only gathering pipeline blowdowns should be reported. On the

[6] Mandatory Greenhouse Gas Reporting Rule: EPA's Response to Public Comments, Subpart W: Petroleum and Natural Gas Systems, Docket Id. No. EPA–HQ–OAR–2009–0923.

contrary, the proposal supporting documentation reflects the fact that the EPA expected that blowdown vent stacks located at boosting stations would be similar to blowdown vent stacks in other industry segments and conducted a separate evaluation to determine whether the same calculation methods would be appropriate for gathering pipeline blowdown vent stacks. The final rule supporting documentation more clearly reflects this intent. The EPA also notes that while measuring equipment to determine whether it exceeds the 50 $ft^3$ physical volume threshold for reporting may create an initial burden on reporters, the threshold will lead to a burden reduction as reporters become familiar with the identification process.

4. Storage Tank Vented Emissions

a. Summary of Final Amendments

The EPA is finalizing the same methods for calculating emissions for atmospheric storage tanks located in the Onshore Petroleum and Natural Gas Gathering and Boosting segment as in the Onshore Petroleum and Natural Gas Production segment, as proposed but with a few clarifications. Specifically, the EPA is clarifying some of the language within 40 CFR 98.233(j) and 40 CFR 98.236(j) that was originally written to apply to Onshore Petroleum and Natural Gas Production facilities and not proposed to be amended to also apply to storage tanks in the Onshore Petroleum and Natural Gas Gathering and Boosting segment. In particular, references to a ''wellhead separator'' have been clarified to refer simply to a ''separator,'' which is a defined term in 40 CFR 98.238. To accommodate Onshore Petroleum and Natural Gas Gathering and Boosting storage tanks that do not receive hydrocarbon liquids from a separator or well, Calculation Methods 1 and 2 have been amended to specify how to estimate emissions if liquids are received from non-separator equipment. In addition, certain instances of ''sub-basin'' have been amended to refer to ''county'' to clarify the requirements for Onshore Petroleum and Natural Gas Gathering and Boosting reporters. All other provisions in 40 CFR 98.233(j) apply to the Onshore Petroleum and Natural Gas Gathering and Boosting segment, including the 10 barrels per day threshold for determining which calculation method may be used for estimating emissions.

b. Summary of Comments and Responses

*Comment:* One commenter stated that combining the requirements for storage tanks in the Onshore Petroleum and Natural Gas Gathering and Boosting segment and the Onshore Petroleum and Natural Gas Production segment results in confusing terminology and unclear requirements. In particular, the commenter noted that the terms ''separator(s),'' ''gas-liquid separator(s),'' ''wellhead separator(s),'' and ''wellhead gas-liquid separator(s),'' appear throughout the storage tank requirements. The commenter asked whether the EPA intended all of these terms to refer to the same equipment. The commenter also noted that not all gathering and boosting system storage tanks receive liquids directly from separators, and no gathering and boosting storage tanks receive liquids directly from wellhead separators. Therefore, the commenter stated, the requirements for storage tanks in the Onshore Petroleum and Natural Gas Gathering and Boosting segment are unclear.

The commenter also noted inconsistency between use of the terms ''oil,'' ''sales oil,'' and ''stabilized oil'' in 40 CFR 98.233(j) and 40 CFR 98.236(j). The commenter stated that Onshore Petroleum and Natural Gas Gathering and Boosting facilities may process condensate but not oil, and the commenter asked the EPA to clarify how those terms should be applied to the Onshore Petroleum and Natural Gas Gathering and Boosting segment.

Finally, the commenter noted that Calculation Method 1 for storage tanks requires use of the latest available analysis that is representative of produced crude oil or condensate from the sub-basin category. The commenter stated that the term ''sub-basin'' has no relevance to the Onshore Petroleum and Natural Gas Gathering and Boosting segment because the composition of condensate processed at a compressor station may have little relationship to the oil or gas formation below the compressor station.

*Response:* The EPA agrees that the language in 40 CFR 98.233(j) and 40 CFR 98.236(j) should be clear for all Onshore Petroleum and Natural Gas Production facilities and all Onshore Petroleum and Natural Gas Gathering and Boosting facilities to which it applies. The existing definition of ''separator'' in 40 CFR 98.238 is a vessel in which streams of multiple phases are gravity separated into individual streams of single phase. This general definition and the general term ''gas-liquid separator'' apply to both Onshore Petroleum and Natural Gas Production facilities and all Onshore Petroleum and Natural Gas Gathering and Boosting facilities. Therefore, the EPA has reviewed the language and is amending references to a ''well,'' ''well pad,'' or ''wellhead,'' which are terms that are not expected to apply to most Onshore Petroleum and Natural Gas Gathering and Boosting facilities. The final provisions in 40 CFR 98.233(j) and 40 CFR 98.236(j) refer more generally to separators or gas-liquid separators. To address the comment that not all gathering and boosting system storage tanks receive liquids directly from separators, the EPA has amended 40 CFR 98.233(j)(1) and (2) to specify how those calculation methodologies may be used for Onshore Petroleum and Natural Gas Gathering and Boosting storage tanks receiving hydrocarbon liquids from non-separator equipment (*i.e.,* without a well or separator directly upstream of the storage tank).

Regarding the particular material being stored in storage tanks, the EPA agrees that there is inconsistency in some of the terms that could cause some confusion. The EPA is clarifying in this response that for the Onshore Petroleum and Natural Gas Gathering and Boosting segment, the intent is for ''oil'' to refer more generally to hydrocarbon liquids, which is consistent with the statement in 40 CFR 98.233(j) that reporters are required to calculate emissions ''from atmospheric pressure fixed roof storage tanks receiving hydrocarbon produced liquids.'' The proposed separate reporting requirements for quantity of produced oil throughput and produced condensate throughput in 40 CFR 98.236(aa)(10) have been revised, and the final rule requires reporting of the hydrocarbon liquids received by the facility and the hydrocarbon liquids leaving the facility. Finally, the EPA notes that the term ''sales oil'' is already defined in Subpart A to include ''produced crude oil or condensate,'' so there is no further clarification needed.

Regarding the term ''sub-basin,'' the EPA agrees with the commenter that the definition of ''sub-basin category, for onshore natural gas production'' in 40 CFR 98.238 is not relevant for Onshore Petroleum and Natural Gas Gathering and Boosting facilities. The EPA also agrees that the operations within a section of a gathering and boosting system may not be related to the formation type below the surface of the ground at that location, especially as the material travels further from the wells supplying gas and hydrocarbon liquids to the system. As a result of this comment, the EPA reviewed the use of the term ''sub-basin'' as it was proposed to apply to Onshore Petroleum and Natural Gas Gathering and Boosting facilities. In 40 CFR 98.233(j), the calculation methods provide options to

estimate unknown parameters using information from a previous analysis of the composition in the sub-basin category. In these cases, the intent is to estimate unknown parameters from a representative unit (*e.g.,* well, separator). To reflect a similar intent for Onshore Petroleum and Natural Gas Gathering and Boosting facilities, 40 CFR 98.233(j)(1)(vii)(B) and 40 CFR 98.233(j)(1)(vii)(C) in Calculation Method 1 clarify that representative separators or non-separator equipment are located within the same county for Onshore Petroleum and Natural Gas Gathering and Boosting reporters. For Calculation Method 2, the term ''sub-basin category'' is used to describe calculation of emissions for flow to storage tanks directly from wells. The final rule includes a new paragraph 40 CFR 98.233(j)(2)(iii) to address calculation of emissions from flow to a tank from equipment other than a well or separator (such as a stabilizer or slug catcher), and this paragraph also clarifies that representative analyses should come from other non-separator equipment located within the same county. Finally, there are reporting requirements for a ''sub-basin ID'' in 40 CFR 98.236. The final rule specifies that for Onshore Petroleum and Natural Gas Gathering and Boosting, the information to be reported is the county in which the equipment is located.

5. Gathering Pipelines

a. Summary of Final Amendments

The EPA is finalizing the requirements for calculating emissions from gathering pipelines defined to be included in the Onshore Petroleum and Natural Gas Gathering and Boosting segment as proposed. The methodology is similar to the approach used for equipment leaks in the Onshore Petroleum and Natural Gas Production segment. For gathering lines, reporters use the population count and emission factor approach in 40 CFR 98.233(r). The emission factors in Table W–1A for gathering pipelines are whole gas emission factors based on the U.S. GHG Inventory. The population count is the miles of gathering pipeline, similar to the approach used for calculating emissions from natural gas distribution pipelines in the Natural Gas Distribution segment. As noted in section II.B.1.a of this preamble, gathering pipelines with a GOR less than 300 scf/STB are not included in this segment.

b. Summary of Comments and Responses

*Comment:* One commenter asserted that the EPA should revise the proposed emission factor of 2.81 standard cubic feet (scf)/hour/mile for leaks from gathering pipelines to be based on characteristics of currently operating gathering pipelines rather than distribution pipelines or older data on gathering pipelines. The commenter also noted that this emission factor is not applicable to gathering pipelines that carry primarily liquids, as there is no gas stream until after separation. The commenter identified gathering pipeline-specific data from PHMSA and used the data to calculate a suggested emission factor of 2.23 scf/hour/mile.

*Response:* We reviewed the underlying data used to develop the proposed emission factor, and we agree with the commenter that the proposed emission factor could better account for differences between pipeline types and for currently operating gathering pipelines. In the 1996 Gas Research Institute (GRI)/EPA report that is the basis of the emission factor, material-specific emissions factors for gathering lines were developed using data from direct measurement of distribution pipelines conducted in the 1990s, not gathering pipelines. These material-specific emission factors are the same emission factors used by the commenter as the starting point for their revised emission factor.

We agree with the commenter that the emission factors should better represent currently operating gathering pipelines; however, there is significant variability in gathering pipelines and gathering system configurations. Owners and operators currently report the mileage of pipeline by gathering pipeline type to PHMSA.[7] Therefore, rather than calculate a single emission factor for gathering pipelines based on a distribution of gathering pipeline materials, as was done at proposal, the EPA determined that the most appropriate approach is to develop gathering pipeline emission factors for four pipeline material types: Protected steel, unprotected steel, plastic, and cast iron. (For more information about the development of these emission factors, see ''Greenhouse Gas Reporting Rule: Technical Support for Final 2015 Revisions and Confidentiality Determinations for Petroleum and Natural Gas Systems'' in Docket ID No. EPA–HQ–OAR–2014–0831.) The final amendments require reporters to estimate emissions using material-specific emission factors provided in the rule and to report gathering pipeline mileage by material type.

The EPA also notes that reporters will not need to calculate emissions from gathering pipelines that carry hydrocarbon liquids if they are below the minimum GOR threshold for the Onshore Petroleum and Natural Gas Gathering and Boosting segment.

6. Other Emission Sources

a. Summary of Final Amendments

The EPA is finalizing the requirements for natural gas pneumatic devices and pneumatic pumps located in the Onshore Petroleum and Natural Gas Gathering and Boosting segment as proposed. Gathering and boosting reporters will use the same methods for calculating emissions as in the Onshore Petroleum and Natural Gas Production segment. The EPA is also finalizing the requirements for acid gas removal units, dehydrators, and flare stacks as proposed. The methods are the same as the methods for these sources in both the Onshore Petroleum and Natural Gas Production segment and the Onshore Natural Gas Processing segment. The EPA is also finalizing the requirements for compressors and equipment leaks as proposed, with one clarification regarding how to count ''meters/piping'' for equipment leaks. Gathering and boosting reporters use the same method as in the Onshore Petroleum and Natural Gas Production segment. Specifically, a reporter will need to establish an inventory of the components or equipment subject to the population counts, apply the emission factors, and then update the inventory each year to account for new or retired components or equipment.

b. Summary of Comments and Responses

*Comment:* Two commenters stated that the major equipment categories for calculating equipment leaks by population count are not clear for the Onshore Petroleum and Natural Gas Gathering and Boosting segment. Both commenters requested that the EPA clarify how to count ''meters/piping'' for the Onshore Petroleum and Natural Gas Gathering and Boosting segment. One commenter also requested clarification regarding separators, compressors, and in-line heaters (specifically, whether small heating systems used to ensure a temperate environment for a meter are considered in-line heaters). The

[7] U.S. Department of Transportation Pipeline and Hazardous Materials Safety Administration. Natural and Other Gas Transmission and Gathering Pipeline Systems: Annual Report for Calendar Year. Form PHMSA F 7100.2–1 (rev 10–2014). OMB No. 2137–0522, Expires: 10/31/2016.

commenter also noted that there was limited time to evaluate the appropriateness of the emission factors in Table W–1A and the component counts in Table W–1B for gathering and boosting systems.

*Response:* The categories in Table W–1B represent the types of equipment that are generally expected to be found in the field for Onshore Petroleum and Natural Gas Production and Onshore Petroleum and Natural Gas Gathering and Boosting facilities.[8] For the Onshore Petroleum and Natural Gas Gathering and Boosting segment, the EPA realizes that reporters will only use those categories that apply (*e.g.,* reporters will not include wellheads, as that equipment type is specific to Onshore Petroleum and Natural Gas Production facilities).

Most of the major equipment categories are described by function in the rule. For the example of a separator, 40 CFR 98.238 defines a separator as ''a vessel in which streams of multiple phases are gravity separated into individual streams of single phase.'' Any device meeting this functional definition will fall into this major equipment category. Other major categories are described in the rule by their functional role, including dehydrators and compressors. For the in-line heater example for which the commenter requested clarification, the equipment described is not located in line with the fluid flow and therefore would not be considered in this equipment category.

The EPA agrees with both commenters that the measurement of meters/piping in the Onshore Petroleum and Natural Gas Gathering and Boosting segment was not clear as proposed. The final rule specifies that reporters in the Onshore Petroleum and Natural Gas Gathering and Boosting segment should count the number of meters in the facility and use that as the count for ''meters/piping.''

*Comment:* Two commenters supported the use of calculation methods that include emission factors for the Onshore Petroleum and Natural Gas Gathering and Boosting segment because they are less burdensome to the industry. However, the commenters also requested that the EPA allow reporters the option to use any available data/information that provides the best representation of emissions from their specific sources, including manufacturer data, test data, measurement and/or monitoring data. The commenters compared this option to the approach in state-level emissions inventories that require an emissions reporting hierarchy. The commenters noted that this approach will provide the EPA with more accurate emissions data that could be used to update the emission factors for the Onshore Petroleum and Natural Gas Gathering and Boosting segment.

*Response:* The calculation methods provided in subpart W were selected to minimize burden on industry while maintaining the necessary quality and consistency of data to inform policy. Therefore, outside of the BAMM provisions being finalized in this rulemaking, the EPA does not agree to allow reporters to use customized, individual information for their emission sources at this time. The EPA is currently investigating additional calculation methods for subpart W sources and may propose additional calculation methods in the future.

### *C. Summary of Final Amendments for the Onshore Natural Gas Transmission Pipeline Segment*

#### 1. Summary of Final Amendments

The EPA is finalizing the proposal to add reporting requirements for emissions from natural gas transmission pipeline blowdowns between compressor stations in a new Onshore Natural Gas Transmission Pipeline segment. Commenters generally had no objections to the merit of including this segment in subpart W but did suggest technical edits and clarifications for targeted provisions. As noted in the preamble to the proposed amendments, a blowdown is the release of gas from transmission pipelines that causes a reduction in system pressure or a complete depressurization. The EPA is clarifying that for the purposes of the Onshore Natural Gas Transmission Pipeline segment, the blowdowns that must be reported are blowdowns of a pipeline or section of pipeline.

The EPA is finalizing clarifications to the proposed definition of onshore natural gas transmission pipeline owner or operator. For interstate pipelines, the onshore natural gas transmission pipeline owner or operator is the person identified as the transmission pipeline owner or operator on the Certificate of Public Convenience and Necessity issued under 15 U.S.C. 717f, as proposed. For intrastate pipelines, the onshore natural gas transmission pipeline owner or operator is the person identified as the owner or operator on the transmission pipeline's Statement of Operating Conditions under section 311 of the Natural Gas Policy Act (NGPA). If the intrastate pipeline is not subject to section 311 of the NGPA, the onshore natural gas transmission pipeline owner or operator is the person identified as the owner or operator on reports to the state regulatory body regulating rates and charges for the sale of natural gas to consumers. Finally, the owner or operator of a pipeline that falls under the ''Hinshaw Exemption'' is the person identified as the owner or operator on blanket certificates issued under 18 CFR 284.224.

The EPA is finalizing the definition of facility for the new Onshore Natural Gas Transmission Pipeline segment as proposed; the facility is the total U.S. mileage of natural gas transmission pipelines owned or operated by an onshore natural gas transmission pipeline owner or operator. If an owner or operator has multiple pipelines in the United States, the facility is considered the aggregate of those pipelines, even if they are not interconnected.

The EPA is finalizing the requirement that reporters use the methods in 40 CFR 98.233(i) to calculate or measure emissions from pipeline blowdown events as proposed. One method allows a reporter to calculate emissions based on the volume of the pipeline segment between isolation valves that is blown down and the pressure and temperature of the gas within the pipeline. The second method allows the reporter to measure the emissions from the blowdown using a flow meter on the blowdown vent stack. In both methods, the reporter calculates both $CH_4$ and $CO_2$ emissions from the volume of natural gas vented using either default gas composition or engineering estimates of composition as specified in 40 CFR 98.233(u)(2)(iii).

The EPA is not finalizing the proposed requirement to report the emissions and location (latitude and longitude) of each blowdown event. Instead, the EPA is requiring that Onshore Natural Gas Transmission Pipeline reporters report the total $CH_4$ and $CO_2$ emissions in each state, the number of blowdowns in each state, and the miles of pipeline in each state. In addition, instead of requiring Onshore Natural Gas Transmission Pipeline reporters to use the same equipment and event type categories as other industry segments reporting blowdown emissions, the EPA is including reporting categories specific to the Onshore Natural Gas Transmission Pipeline segment.

[8] See the memorandum ''Equipment-Level Population Emission Factors for Onshore Production,'' Docket Item No. EPA–HQ–OAR–2009–0923–3582, for more information regarding the derivation of this table.

2. Summary of Comments and Responses

*Comment:* Several commenters noted that not all intrastate pipelines are subject to section 311 of the NGPA and asked the EPA to clarify which intrastate pipelines are subject to reporting. One commenter requested that the EPA clarify that intrastate pipelines not subject to the NGPA are not required to report under subpart W. Another commenter suggested revising the definition of owner or operator to state that if section 311 of the NGPA does not apply, the intrastate transmission pipeline owner or operator is the owner or operator identified on required reports with the appropriate state agency.

*Response:* It was our intent to include transmission pipelines (including intrastate pipelines) that meet the already existing subpart W definition of ''transmission pipeline'' in the Onshore Natural Gas Transmission Pipeline segment. A transmission pipeline in subpart W is defined in 40 CFR 98.238 as a Federal Energy Regulatory Commission (FERC) rate-regulated Interstate pipeline, a state rate-regulated Intrastate pipeline, or a pipeline that falls under the ''Hinshaw Exemption'' as referenced in section 1(c) of the Natural Gas Act, 15 U.S.C. 717–717 (w)(1994). After reviewing the comments on the proposed rule, we re-reviewed section 311 of the NGPA and found that only operators of some intrastate pipelines, including those that transport natural gas on behalf of an interstate pipeline or sell natural gas to an interstate pipeline, are required to prepare a Statement of Operating Conditions for compliance under section 311 of the NGPA. Therefore, to clarify how to determine the owner and operator of intrastate transmission pipelines, the finalized definition of ''onshore natural gas transmission pipeline owner or operator'' specifies that for intrastate transmission pipelines not subject to section 311 of the NGPA, the owner or operator is the person identified as the owner or operator on reports to the state regulatory body regulating rates and charges for the sale of natural gas to consumers. The EPA also found that the proposed definition of ''onshore natural gas transmission pipeline owner or operator'' did not specify how to determine the owner or operator of pipelines that fall under the ''Hinshaw Exemption.'' The EPA notes that similar to intrastate pipelines, pipelines that fall under the ''Hinshaw Exemption'' must apply for a ''blanket certificate'' under 18 CFR 284.224 in order to transport petroleum or natural gas on behalf of interstate pipelines. Therefore, the finalized definition of ''onshore natural gas transmission pipeline owner or operator'' also specifies that for a pipeline that falls under the ''Hinshaw Exemption,'' the owner or operator is the person identified as the owner or operator on blanket certificates issued under 18 CFR 284.224.

*Comment:* Commenters appreciated that the EPA provided a threshold of 50 $ft^3$ of physical volume for blowdown emissions reporting but requested several changes. Commenters requested that the EPA include a list of ancillary equipment, such as metering and/or regulating stations, pipeline interconnects, and pig launchers and receivers, that would be excluded from reporting of blowdown emissions. One commenter suggested that, alternatively, the physical volume threshold could be increased to 3,000 thousand cubic feet to clearly exclude blowdowns of ancillary facilities along the pipeline. Another commenter stated that it is not feasible to establish a specific *de minimis* volume threshold to exclude all ancillary equipment.

*Response:* The EPA is finalizing the reporting threshold of 50 $ft^3$ of physical volume for blowdowns in the Onshore Natural Gas Transmission Pipeline segment as proposed. This threshold excludes smaller blowdown sources that have little contribution to emissions, consistent with other industry segments within subpart W that must report blowdown stack vent emissions. The EPA is not increasing the physical volume reporting threshold to account for blowdowns from ancillary equipment, as this would be inconsistent with the EPA's previous analysis in ''Equipment Threshold for Blowdowns'' (see Docket Item No. EPA–HQ–OAR–2009–0923–3581), and commenters were divided on whether increasing the threshold would even address their primary concern.

The EPA agrees that the emphasis for the Onshore Natural Gas Transmission Pipeline segment is on calculating and reporting blowdown emissions from pipeline segments, not ancillary equipment. However, any list of ancillary equipment that would be excluded from blowdown reporting could be incomplete, resulting in reporting of emissions from other equipment that is ancillary but not on the list in the rule. In addition, some of the equipment identified as ''ancillary'' in this segment is not considered ancillary in other industry segments, which could lead to confusion among reporters. Instead, the final rule clarifies that facilities in the Onshore Natural Gas Transmission Pipeline segment report pipeline blowdown emissions from blowdown vent stacks. If the blowdown does not include a pipeline segment or has a physical volume of less than 50 $ft^3$, then that blowdown is not required to be reported.

*Comment:* Several commenters stated that the blowdown equipment and event type categories in 40 CFR 98.233(i)(2) were developed for compressor station blowdowns and would not provide meaningful information regarding pipeline blowdowns in the Onshore Natural Gas Transmission Pipeline segment. The commenters provided suggestions for categories that would be more applicable to Onshore Natural Gas Transmission Pipeline blowdowns and would provide more valuable information than relying on the categories in the existing rule.

*Response:* The EPA agrees with the commenters that the rule should include blowdown categories specific to blowdowns in the Onshore Natural Gas Transmission Pipeline segment. The final rule specifies that blowdowns must be grouped into one of the following categories: Pipeline integrity work (*e.g.,* the preparation work of modifying facilities, ongoing assessments, maintenance or mitigation), traditional operations or pipeline maintenance, equipment replacement or repair (*e.g.,* valves), pipe abandonment, new construction or modification of pipelines including commissioning and change of service, operational precaution during activities (*e.g.* excavation near pipelines), emergency shutdowns including pipeline incidents as defined by PHMSA, and all other pipeline segments with a physical volume greater than or equal to 50 $ft^3$.

*Comment:* Commenters requested that the EPA not finalize the requirement to report latitude and longitude for each blowdown event. The commenters indicated this requirement would be burdensome, such data are not currently collected, the requirement is inconsistent with the Paperwork Reduction Act, and the data would not be useful in determining the inventory. Some commenters also suggested aggregating emissions at the state level or only at the national/facility level.

*Response:* The requirement to report latitude and longitude of each blowdown was included in the proposed rule to help characterize the emissions from the new Onshore Natural Gas Transmission Pipeline segment on a more granular level than the nationwide facility. The EPA evaluated this comment and has noted the commenters' assertion that the latitude and longitude of each

blowdown is not information currently reported elsewhere and may result in additional burden. Therefore, the EPA is not finalizing the requirement to report the emissions or latitude and longitude for each individual blowdown. Instead, the EPA is finalizing requirements for reporters to aggregate blowdown emissions by state and report the number of blowdowns and mileage of pipeline per state.

*Comment:* Two commenters questioned the requirement to report the data elements in proposed 40 CFR 98.236(aa)(11). Two commenters noted that the quantities of natural gas in this section are duplicative of information reported to FERC annually in FERC Form 2, although the units of measure are dekatherms rather than thousand standard cubic feet. One commenter noted that for the GHGRP reporting, they would assume 1 dekatherm is equivalent to 1,000 scf of natural gas, based on the approximate heat value of natural gas. The other commenter opposed these reporting requirements because they are duplicative and inconsistent with the requirements of the PRA, which is intended to reduce the information burden imposed by the federal government by requiring that agencies ensure that reported information is not duplicative of other available data and has a practical utility. This commenter stated that the EPA has not followed the PRA. The commenter also stated that the requested information is irrelevant to assisting EPA in verifying pipeline blowdown emissions; in particular, the information cannot be used to calculate pipeline blowdown volumes.

*Response:* As the EPA has noted elsewhere, the data collected in the GHGRP will be used to inform future policy decisions. As such, information regarding emissions and the inputs needed to verify those emissions is only part of the information that is needed. It is important to understand that, to inform future policy, activity data is often as useful as emissions estimates. The EPA has determined that data elements in 40 CFR 98.236(aa)(11) are activity data that will be used to determine how to use the emissions data to inform future policy decisions. It is essential that reporters provide and certify the data they gather under this rule so that EPA has a complete inventory from all sources under this rule and can directly relate the activity data to the emissions data reported, which will provide for appropriate verification of the emissions data reported.

The EPA agrees with the first commenter that for purposes of reporting the data elements in 40 CFR 98.236(aa)(11), reporters may consider 1 dekatherm equal to 1,000 scf.

*Comment:* Several commenters asserted that the EPA has not been consistent in its decisions on whether to include pipeline leaks across the subpart W industry segments. Some commenters supported the EPA's proposal not to include leaks from transmission pipelines and noted the decision was consistent with the Onshore Petroleum and Natural Gas Production segment. Conversely, one commenter stated that transmission pipeline leaks should be reported, consistent with the new Onshore Petroleum and Natural Gas Gathering and Boosting segment. This commenter noted that accidental leaks at these facilities can be a significant source of $CH_4$ emissions, as evidenced by the magnitude of emissions from pipeline incidents reported to PHMSA, and leaks at remote locations may not be noticed or repaired immediately.

*Response:* The EPA previously considered fugitive emissions that result from leaks in transmission pipelines in the re-proposal of subpart W in April 2010 (75 FR 18616; April 12, 2010) but did not include provisions for these emissions in either the proposed or final rules. The April 2010 preamble explained that the EPA did not propose reporting requirements for fugitive emissions from leaks in natural gas pipeline segments between compressor stations due to the dispersed nature of the fugitive emissions and the fact that, once fugitives are found, the leaks causing the emissions are usually addressed quickly for safety reasons (75 FR 18616; April 12, 2010). The EPA also noted in the proposal preamble for these amendments (79 FR 76267; December 9, 2014) that larger fugitive leaks are currently reported to PHMSA as part of 49 CFR 191.3. Under this provision, any pipeline incident that results in unintentional gas loss of 3 million $ft^3$ or more must be reported. The commenter that noted that emissions can be significant cited the emissions reported to PHMSA under this provision, and the EPA does not find it necessary to require owners and operators to report this same information under the GHGRP. The focus of the PHMSA reporting requirements is to identify major safety-related incidents that are not a part of typical operations. Therefore, the EPA is not finalizing a requirement to report fugitive emissions from transmission pipeline leaks but will continue to review this source as part of the EPA's ongoing effort to ensure comprehensive, high quality data in subpart W.

*D. Summary of Final Amendments for Well Identification Numbers*

1. Summary of Final Amendments

The EPA is finalizing some of the proposed amendments to 40 CFR 98.236 to add reporting requirements for well identification numbers to improve data quality by enabling identification of wells. These well identification numbers will be reported for the first time in the report covering 2016 emissions; reporters will not be required to report well identification numbers for previous years. For the majority of wells, the well identification number reported will be the US Well Number (formerly referred to as the API Well Number, or API Number).[9] For any well that does not already have a US Well Number, the reporter will be required to provide the unique well number assigned by the permitting authority for drilling of oil and gas wells. Commenters varied in their level of support for the proposed provisions regarding well identification numbers. The EPA is adjusting the final provisions in response to concerns about these reporting provisions raised in comments.

The EPA is requiring the reporting of well identification numbers for the Onshore Petroleum and Natural Gas Production segment only for information related specifically to wells. For reporters in the Onshore Petroleum and Natural Gas Production segment that report emissions using input data that are calculated from measurements at individual wells or equipment associated with individual wells (*e.g.,* if Equation W–10A was used to calculate emissions from oil well completions and workovers with hydraulic fracturing, well testing emissions), the report must include the well identification number for which those measurements were made and the well identification number(s) of other wells to which the measurements will be applied. This includes a list of the well identification numbers by sub-basin for the producing wells at the end of the calendar year as well as lists of the well identification numbers for the wells acquired, divested, completed, and permanently taken out of production during the calendar year. The EPA is not finalizing the proposed requirement that reporters in the Onshore Petroleum and Natural Gas Production segment report a list of well identification numbers associated with different emission

[9] The Professional Petroleum Data Management Association. *The US Well Number Standard: An Identifier for Petroleum Industry Wells in the USA.* Version 2013 rev 1, published June 19, 2014. Available at *http://dl.ppdm.org/dl/1147.*

sources for all wells in a sub-basin included in the reported emissions data.

The EPA is finalizing the proposed change to update references to the ''API well number'' in subpart W to ''well identification number.'' The EPA is not otherwise changing the well identification reporting requirements finalized in 2014 (79 FR 70352; November 25, 2014). Reporters will still need to report well identification numbers for liquids unloading and for any exploratory wells for which reporting has been delayed for 2 years.

2. Summary of Comments and Responses

*Comment:* While one commenter supported the addition of well identification number reporting, most commenters opposed the proposal to require reporting of well identification numbers. These commenters asserted that requiring reporting of well identification numbers is an overreach of the EPA's authority for the reporting program under CAA section 114 and that the EPA has not provided a reasoned basis for the departure from the previous EPA approach that well-specific data was not necessary under Subpart W. Commenters also noted that well identification numbers are not needed to validate reported emissions. One commenter noted that the EPA has not questioned the data collected from wells thus far; nor has the EPA stated that the data already collected are insufficient to inform policy without addition of well identification numbers, so with this proposal, the EPA is no longer balancing data collection with reporting burdens. Commenters stated that mapping and maintaining a database of well identification numbers is more burdensome than the EPA estimated, and one commenter stated that it would be arbitrary and capricious to require companies to expend the resources necessary to report these data. Commenters also noted that it is not clear how to interpret the term ''associated with'' in all cases. One commenter stated that matching specific wells with emissions in the GHGRP could cause security concerns.

*Response:* The EPA disagrees that requiring reporting of well identification numbers is an overreach of our authority. The EPA has determined that these data elements are useful and necessary for the verification of existing data and for characterizing the emissions from the industry segment. This final revision will allow the EPA to link the GHGRP data to other databases (*i.e.* state permitting databases) to more easily match the data reported under the GHGRP with other data sources and will improve the accuracy and transparency of subpart W. Additionally, being able to match the GHGRP data to other data sources will provide the EPA with more options for analysis of the GHGRP data to better inform future policy decisions related to GHG emissions from the oil and natural gas production sector. The reporting of the well identification numbers will also allow the EPA to assess the completeness and representativeness of the data collected under the GHGRP as a portion of all activity in the oil and natural gas production sector. The EPA reiterates that CAA section 114 provides the EPA with the authority to collect emissions data, which includes information about the location of the source of emissions. Section 114 generally authorizes the EPA to gather information from any person who owns or operates an emissions source, who is subject to a requirement of the CAA, who manufactures control or process equipment, or who the Administrator believes has information necessary for the purposes of section 114(a). The EPA may gather information for purposes of establishing implementation plans or emissions standards, determining compliance, or ''carrying out any provision'' of the CAA. For these reasons, the Administrator may request that a person, on a one-time, periodic or continuous basis, establish and maintain records, make reports, install and operate monitoring equipment and, among other things, provide such information the Administrator may reasonably require. This language has been interpreted to grant the EPA broad authority. See, *e.g.,* Dow Chemical Co. v. U.S., 467 U.S. 227, 233 (1986) (''Regulatory and enforcement authority generally carries with it all modes of inquiring and investigation traditionally employed or useful to execute the authority granted.''). See, generally *Mandatory Greenhouse Gas Reporting Rule: EPA's Response to Public Comments, Volume No.: 9, Legal Issues* (Docket Item No. EPA–HQ–OAR–2008–0508–2264). The requirement to report well identification numbers for well-specific data clearly fits within EPA's statutory authority. We also believe, for the reasons stated above, that we are exercising this authority reasonably in furtherance of the purposes of the Clean Air Act. Further, the EPA disagrees that this is a deviation from our previous approach to collecting data. As discussed in section II.B of this preamble, the EPA is finalizing the requirement to report Onshore Petroleum and Natural Gas Gathering and Boosting facilities at the basin-level, which is consistent with our previous approach to the Onshore Petroleum and Natural Gas Production segment.

Therefore, the EPA is finalizing the requirements to report the well identification number for well-specific data as proposed. Specifically, for reporters in the Onshore Petroleum and Natural Gas Production segment that report emissions using input data that are calculated from measurements at individual wells or equipment or operations associated with individual wells (*e.g.,* if Equation W–10A is used to calculate emissions from oil well completions and workovers with hydraulic fracturing, well testing emissions, liquids unloading), the report must include the well identification number for which those measurements were made, or for which the equipment or operations are associated. In addition, the EPA is finalizing the requirements in 40 CFR 98.236(aa)(1)(ii)(D) through (H) to include a list of the well identification numbers by sub-basin for the producing wells at the end of the calendar year and lists of the well identification numbers for the wells acquired, divested, completed, and permanently taken out of production during the calendar year. The EPA continues to expect that this is a low burden to reporters because reporters already track and maintain well identification numbers associated with measurements used for the GHGRP input data.

To respond to the comment that well identification numbers may not be available for or assigned to equipment other than wells, the EPA reviewed the permits and requirements in seven different states. Although most of the states assign unique identifiers to each emission source, the EPA found that only two of the seven states have a tracking system that links individual emission sources to specific wells and well identification numbers, and these two states are not consistent in their approach. (See ''Greenhouse Gas Reporting Rule: Technical Support for 2015 Revisions and Confidentiality Determinations for Petroleum and Natural Gas Systems; Final Rule'' in Docket ID No. EPA–HQ–OAR–2014–0831 for more information on this analysis.) While it may be straightforward to assign some emission sources directly to one well, particularly if there is only one well on the single well pad and the reporter does not operate any other wells nearby, the EPA's review of state requirements shows that there may be multiple scenarios in which a reporter does not know which well or wells are associated with a particular emission source. For

example, there may be multiple wells on a single well pad and multiple storage tanks associated with that well pad, and the tanks may have the ability to receive hydrocarbon liquids from several of those wells. Therefore, in light of the potential burden of requiring facilities to develop new tracking systems that would assign and track emissions to well identification numbers for the purposes of part 98, the EPA is not requiring facilities in this rulemaking to report well identification numbers for every emission source in a facility in the Onshore Petroleum and Natural Gas Production segment.

*E. Summary of Final Amendments to Best Available Monitoring Methods*

1. Summary of Final Amendments

As proposed, reporters will be allowed to use BAMM for the 2016 reporting year for the new industry segments and emission sources included in this action. These include calculating and reporting emissions from oil well completions and workovers with hydraulic fracturing, from onshore petroleum and natural gas gathering and boosting systems, and for transmission pipeline blowdown emissions. Reporters are allowed to use BAMM to estimate inputs to emission equations for the newly finalized emission sources for cases where the monitoring of these inputs would not be possible beginning on January 1, 2016. The use of BAMM is not allowed for the reporting of well identification numbers because reporters should already have well identification numbers readily available for all wells and associated equipment to which this reporting requirement applies and because the well identification number is not a parameter that requires monitoring equipment to be measured and, therefore, does not meet the requirements for BAMM.

For these sources, the EPA is finalizing a longer timeline for BAMM than was proposed. Reporters have the option of using BAMM for the new industry segments and emission sources included in this action from January 1, 2016, to December 31, 2016, without seeking prior EPA approval. The provision providing a set amount of automatic transitional BAMM will allow reporters to prepare for data collection while automatically being able to use BAMM, which is consistent with the approach of prior part 98 rulemakings. This additional time for reporters to comply with the revised monitoring methods in subpart W will allow facilities to install the necessary monitoring equipment during other planned (or unplanned) process unit downtime, thus avoiding process interruptions, and is responsive to comments received on the proposed rule provisions.

The EPA is not finalizing the proposed provision to allow reporters the opportunity to request an extension for the use of BAMM. The EPA will not accept requests for an extension for the use of BAMM beyond the time periods listed above. As proposed, the EPA also is not providing transitional BAMM for these new requirements beyond December 31, 2016.

The EPA is not allowing the use of BAMM beyond 2016 and does not anticipate that BAMM will be needed beyond 2016 for the new segments and emissions sources being finalized in this rule.

2. Summary of Comments and Responses

*Comment:* Several commenters stated that only 3 months of automatic BAMM and 1 year of transitional BAMM is not enough time to implement the monitoring and measurement requirements for facilities newly subject to subpart W and newly added emission sources. The commenter stated that adding a new segment is a significant amendment and the EPA has set the precedent of providing at least 1 year of automatic BAMM when adding a new segment to subpart W. The commenters noted that not all gathering and boosting reporters are already reporting as Onshore Petroleum and Natural Gas Production facilities, so they will not necessarily all be familiar with the monitoring and calculation methodologies. The commenters also noted that nearly all reporters will be spending the first month working on BAMM requests for the rest of 2016.

The commenters had a variety of suggestions for how long the EPA should provide BAMM for these new emission sources. Several commenters suggested 1 year (through the end of 2016) for automatic BAMM. Another commenter suggested March 31, 2017 (*i.e.,* 1 year in addition to the EPA's proposed 3 months), and another stated that 3 years would be consistent with the length of time provided when the Onshore Petroleum and Natural Gas Production segment was added to subpart W. Some commenters addressed the length of transitional BAMM with the EPA's approval. One commenter noted that a new reporter/facility could become subject to one of the new segments beyond the end of 2016, so there should be no deadline for submitting a request for BAMM to the EPA. Another requested transitional BAMM through the end of 2018.

*Response:* The EPA recognizes that most of the amendments being finalized in this rulemaking are new requirements rather than clarifications of existing reporting requirements for facilities already subject to subpart W and may require the development and implementation of new systems of data collection and monitoring. Therefore, the EPA is finalizing 1 year of automatic transitional BAMM in place of the proposed 3 months of automatic transitional BAMM. This additional time for reporters to comply with the revised monitoring methods in subpart W will allow facilities to install the necessary monitoring equipment and implement any new systems of data collection that may be required. Because the amount of time for which automatic BAMM is available should be sufficient time to comply with the requirements of subpart W for the new segments and emission sources, the EPA will not provide additional BAMM beyond the automatic BAMM provisions in 40 CFR 98.234(g).

We note that 40 CFR 98.235(e) and(f) provides 6 months of reporting flexibility for facilities that become subject to subpart W or acquire new sources after reporting year 2016. Reporters may also refer to the provisions of 40 CFR 98.235 after reporting year 2016 for guidance on reporting emissions if certain required data are not collected.

## III. Confidentiality Determinations

*A. Summary of Final Confidentiality Determinations for New Subpart W Data Elements*

In the proposed rule, we assigned new data elements to the appropriate direct emitter data categories created in the 2011 Final CBI Rule based on the type and characteristics of each data element.[10] For data elements the EPA assigned to a direct emitter category with a categorical determination, the EPA proposed that the categorical determination for the category be applied to the proposed new data element. For data elements assigned to the ''Unit/Process 'Static' Characteristics that Are Not Inputs to Emission Equations'' and ''Unit/Process Operating Characteristics that Are Not Inputs to Emission Equations,'' we proposed confidentiality determinations on a case-by-case basis taking into

[10] ''Confidentiality Determinations for Data Required Under the Mandatory Greenhouse Gas Reporting Rule and Amendments to Special Rules Governing Certain Information Obtained Under the Clean Air Act'' (76 FR 30782, May 26, 2011).

consideration the criteria in 40 CFR 2.208, consistent with the approach used for data elements previously assigned to these two data categories. We also proposed individual confidentiality determinations for six new data elements without making a data category assignment. Refer to the preamble to the proposed rule (79 FR 76267; December 9, 2014) for additional information regarding the proposed confidentiality determinations.

With consideration of the data provided by commenters, the EPA is finalizing the confidentiality determinations as proposed. Specifically, the EPA is finalizing the proposed decision to require each of the new data elements to be designated as ''not CBI.''

The EPA proposed to provide reporters with the option to delay reporting of five data elements for 2 reporting years in situations where exploratory wells are the only wells in a sub-basin. We received comment requesting that the EPA provide the same 2-year delay for additional data elements associated with exploratory wells. The comment and the EPA's response are included in section III.B of this preamble. Based on consideration of the comment and consistent with the EPA's previous decisions related to exploratory wells under part 98 (79 FR 63750, October 24, 2014; 79 FR 70352, November 25, 2014), the EPA is finalizing provisions to provide reporters with the option to delay reporting of five data elements as proposed and, based on comments received, an additional two data elements for 2 reporting years in situations where exploratory wells are the only wells in a sub-basin. For a given sub-basin, in situations where wildcat wells and/or delineation wells are the only wells in a sub-basin that can be used for the required measurement, the following seven data elements associated with the delineation or wildcat well may be delayed for 2 reporting years: (1) The cumulative gas flowback time, in hours, for each sub-basin, from when gas is first detected until sufficient quantities are present to enable separation (40 CFR 98.236(g)(5)(i)); (2) the cumulative flowback time, in hours, for each sub-basin, after sufficient quantities of gas are present to enable separation (40 CFR 98.236(g)(5)(i)); (3) the measured flowback rate, in standard cubic feet per hour, for each sub-basin (40 CFR 98.236(g)(5)(ii)); (4) the gas to oil ratio for the well (40 CFR 98.236(g)(5)(iii)(A)); (5) the volume of oil produced during the first 30 days of production after completions of each newly drilled well or well workover using hydraulic fracturing (40 CFR 98.236(g)(5)(iii)(B)); (6) the total annual gas-liquid separator oil volume that is sent to applicable onshore storage tanks, in barrels (40 CFR 98.236(j)(1)(iii)); and (7) the total annual oil throughput that is sent to all atmospheric tanks, in barrels (40 CFR 98.236(j)(2)(i)(A).

Four of the seven data elements for which reporting may be delayed by 2 years are inputs to emission equations and the EPA provided the same option in the EPA's previous decisions related to exploratory wells under part 98 (79 FR 63750, October 24, 2014). Two of the seven data elements are inputs only when the applicable data are related to a single well (the two data elements in 40 CFR 98.236(g)(5)(i)), and one data element is never an input (40 CFR 98.236(j)(2)(i)(A)). Where the EPA agrees that there are early disclosure concerns related to exploratory wells, the EPA decided to treat those early disclosure concerns consistently throughout subpart W by providing the option to delay reporting by 2 years to all seven data elements listed above.

At proposal, in cases where the two data elements in 40 CFR 98.236(g)(5)(i)) are not inputs to equations, they were assigned to the ''Unit/Process Operating Characteristics that are Not Inputs to Emission Equations'' category and were proposed to be ''not CBI.'' The EPA is finalizing this determination as proposed. Specifically, the ''not CBI'' determination applies to all situations except for when the data elements are inputs to equations.

For the situations when the data elements are used as inputs to equations, the EPA is assigning them to the ''Inputs to Emission Equations'' data category and is not making confidentiality determinations for these data. The EPA evaluated and summarized any potential disclosure concerns with the reporting of the data elements assigned to the ''Inputs to Emission Equations'' data category in the memo titled ''Review for Potential Disclosure Concerns for Inputs to Emission Equations Affected by the 2015 Revisions and Confidentiality Determinations for Petroleum and Natural Gas Systems'' available in Docket ID No. EPA–HQ–OAR–2014–0831. Other than the exception of the early disclosure concerns for certain data elements related to exploratory wells discussed earlier in this section, the EPA has concluded that there are no disclosure concerns with the reporting of these data elements.

The data element collected under 40 CFR 98.236(j)(2)(i)(A) was proposed as ''not CBI'' and was not assigned to a data category. The EPA is finalizing this determination as proposed as well. For the data elements reported under 40 CFR 98.236(g)(5)(i)) (in cases where they are not inputs to equations) and 40 CFR 98.236(j)(2)(i)(A), the ''not CBI'' determinations will apply once the data are reported to the EPA following the 2-year delay.

*B. Summary of Comments and Responses*

This section summarizes the major comments and responses related to the proposed categorical assignments and confidentiality determinations. See ''Response to Public Comments on Greenhouse Gas Reporting Rule: 2015 Revisions and Confidentiality Determinations for Petroleum and Natural Gas Systems'' in Docket ID No. EPA–HQ–OAR–2014–0831 for a complete listing of all comments and responses. See the memorandum ''Final Data Category Assignments and Confidentiality Determinations for Data Elements (excluding inputs to emission equations) in the 'Greenhouse Gas Reporting Rule: 2015 Revisions and Confidentiality Determinations for Petroleum and Natural Gas Systems; Final Rule' '' in Docket ID No. EPA–HQ–OAR–2014–0831 for a complete listing of final data category assignments and confidentiality determinations, and a discussion of changes since proposal.

*Comment:* One commenter requested that the EPA reconsider the determination that the quantity of produced gas throughput in the calendar year and the quantity of produced gas consumed by the facility in the calendar year are ''not CBI.'' The commenter noted that the quantity of natural gas received and the quantity of processed gas leaving processing plants was maintained as CBI in the 2014 amendments (79 FR 70352; November 25, 2014). The commenter also stated that information on fuel consumed at gathering and boosting facilities is not typically publically available, and when this information is combined with the quantity of produced gas throughput, it directly indicates the fuel efficiency of a station. The commenter noted that while the EPA is correct that the agreements are long-term for a given well, revealing information about one facility's fuel efficiency could cause competitive harm by affecting contracts for other facilities owned by that company, especially if there are smaller gathering and boosting facilities in the area that do not have to report this information to the GHGRP.

The commenter also requested that the EPA clarify a number of the reporting elements in 40 CFR

98.236(aa)(10). Specifically, the commenter requested clarification of the terms ''produced gas,'' ''produced condensate,'' ''produced oil,'' ''throughput,'' and ''consumed'' as they are used in proposed 40 CFR 98.236(aa)(10). The commenter also asserted that the data element in 40 CFR 98.236(aa)(10)(ii) (''quantity of produced gas consumed'') would be redundant with subpart C and should not be finalized. Finally, the commenter stated that the requirement to report the ''quantity of gas flared, vented and/or unaccounted for in the calendar year'' in 40 CFR 98.236(10)(aa)(v) would undermine over 5 years of rule development, public comment, reconsiderations, and petitioner negotiations because it would require reporting of emissions that are otherwise exempted (*e.g.,* blowdowns below 50 $ft^3$).

*Response:* The EPA reviewed these comments and has clarified the reporting elements in 40 CFR 98.236(aa)(10) for the final rule. The final reporting requirements include: (1) The quantity of gas received by the gathering and boosting facility in the calendar year, in thousand standard cubic feet; (2) the quantity of gas transported to a natural gas processing facility, a natural gas transmission pipeline, a natural gas distribution pipeline, or another gathering and boosting facility in the calendar year, in thousand standard cubic feet; (3) the quantity of all hydrocarbon liquids received by the gathering and boosting facility in the calendar year, in barrels; and (4) the quantity of all hydrocarbon liquids transported to a natural gas processing facility, a natural gas transmission pipeline, a natural gas distribution pipeline, or another gathering and boosting facility in the calendar year, in barrels. The EPA has determined that these quantities will be easily accessible for all reporters and are more consistent with the reporting requirements for the Onshore Natural Gas Processing segment. The EPA is finalizing the CBI determinations for these quantities as ''not CBI,'' as proposed.

The final reporting requirements do not include the terms ''produced gas,'' ''produced condensate,'' ''produced oil,'' ''throughput,'' or ''consumed,'' so no clarification regarding the use of those terms is needed. In particular, the final rule does not include a requirement to report the quantity of produced gas consumed by the facility. The difference between the quantities received by a gathering and boosting facility and the quantities exiting the gathering and boosting facility is expected to include the quantity of gas consumed by the facility as well as the quantity of gas flared or vented in one lump sum. Therefore, the reporting requirements do not directly indicate the fuel efficiency of the stations in a gathering and boosting facility.

*Comment:* One commenter reiterated previously stated concerns over the disclosure of information for exploratory wells, especially when they are located in stepout areas where no prior reporting exists for a given sub-basin. The commenter supported the EPA's proposal to defer reporting of data elements related to oil well completions and workovers with hydraulic fracturing for exploratory wells, but expressed concern that EPA has not provided such a delay in reporting for all emissions data and data elements that are associated with exploratory wells. Specifically, the commenter stated that the EPA failed to provide a necessary 2-year deferral in reporting for the following data elements, which are as business sensitive and confidential as the other information for which the EPA proposed to defer reporting for 2 years:

- 40 CFR 98.236(g)(5)(iii)(A)—If you used Equation W–12C to calculate the average gas production rate for an oil well, the gas to oil ratio for the well in standard cubic feet of gas per barrel of oil.
- 40 CFR 98.236(g)(5)(iii)(B)—If you used Equation W–12C to calculate the average gas production rate for an oil well, the volume of oil produced during the first 30 days of production after completions of each newly drilled well or well workover using hydraulic fracturing, in barrels.
- 40 CFR 98.236(g)(6)(i)—If you used Equation W–10B to calculate annual volumetric total gas emissions for completions that vent gas to the atmosphere, the vented natural gas volume, in standard cubic feet, for each well in the sub-basin.
- 40 CFR 98.236(g)(6)(ii)—If you used Equation W–10B to calculate annual volumetric total gas emissions for completions that vent gas to the atmosphere, the flow rate at the beginning of the period of time when sufficient quantities of gas are present to enable separation, in standard cubic feet per hour, for each well in the sub-basin.
- 40 CFR 98.236(g)(7)—For each oil well completion or workover and well type combination, annual gas emissions.
- 40 CFR 98.236(g)(8)—For each oil well completion or workover and well type combination, annual $CO_2$ emissions.
- 40 CFR 98.236(g)(9)—For each oil well completion or workover and well type combination, annual $CH_4$ emissions.
- 40 CFR 98.236(g)(10)—For each oil well completion or workover and well type combination, the total $N_2O$ emissions, if the well emissions were vented to a flare.

*Response:* The EPA reviewed the data elements identified by the commenter as having disclosure concerns for exploratory wells (delineation wells and wildcat wells). Consistent with the EPA's previous decisions related to exploratory wells under part 98 (79 FR 63750, October 24, 2014; 79 FR 70352, November 25, 2014), the EPA has determined that, for gas well completions or workovers with hydraulic fracturing of wildcat wells and/or delineation wells, early public disclosure of some of the additional data elements identified by the commenter could reveal the well productivity of wildcat wells and/or delineation wells, thereby resulting in the loss of investment value.

The additional data elements that could reveal well productivity for wildcat and/or delineation wells are as follows:

- The gas to oil ratio for the well (40 CFR 98.236(g)(5)(iii)(A))
- The volume of oil produced during the first 30 days of production after completions of each newly drilled well or well workover using hydraulic fracturing (40 CFR 98.236(g)(5)(iii)(B))

As the EPA has previously noted (79 FR 70352, November 25, 2014), in the interim period before these data are reported to the EPA, the EPA will be able to verify the majority of the emissions using data elements that will be reported to the EPA. For the seven total data elements that may be delayed for 2 years, the EPA will verify emissions using other data reported to the EPA, and will conclude verification upon receipt of the data. The EPA agrees with the commenter that a 2-year delay of reporting is sufficient to prevent early public disclosure of these data and will provide sufficient time for the reporter to thoroughly conduct an assessment of the well. Given the results of this evaluation, the EPA determined that, for these data elements, in those cases where delineation wells or wildcat wells are the only wells in a sub-basin, reporters should be provided an option to delay reporting of the given data element for 2 reporting years starting in 2015. In such cases, if the 2-year delay in reporting is used, the reporter must indicate for each delayed reporting element that wildcat wells and/or delineation wells are the only wells in a sub-basin that can be used for the measurement in the current reporting year. In addition, when reporters report the delayed data elements after the 2-year delay, they must also report the well identification numbers for the applicable wildcat and/or delineation wells in the sub-basin for which the reporting element was delayed. For example, if a delineation or wildcat well is completed in 2015 in a sub-basin that

has only delineation or wildcat wells or these are the only wells for which measurements can be made, then the reporter may: (1) Elect to report these seven data elements in their 2016 annual report submitted by March 31, 2017, or (2) elect to delay reporting of these data elements for up to 2 years. If the reporter elects to delay reporting, then the well identification numbers for the wildcat and delineation wells in the sub-basin for which reporting has been delayed and the data elements delayed from reporting must be reported no later than March 31, 2019.

The following inputs meet the definition of emission data in 40 CFR 2.301(a)(2)(i) because they indicate the amount or frequency of gas emitted by the facility: Volume of natural gas vented (reported under 40 CFR 98.236(g)(6)(i)) and flow rate at the beginning of the period of time when sufficient quantities of gas are present to enable separation (reported under 40 CFR 98.236(g)(6)(ii)). Without corresponding activity data, such as a count of the exploratory wells in a sub-basin or production or flow rate data for a sub-basin containing only exploratory wells, there is no potential to disclose business sensitive information based on these data elements. Therefore, the EPA is not providing an option to delay reporting of these data elements for 2 reporting years.

Similarly, the data element annual gas emissions (reported under 40 CFR 98.236(g)(7)) meets the definition of emission data in 40 CFR 2.301(a)(2)(i) and is assigned to the ''Emissions'' data category because it indicates the amount of gas emitted by the facility. In addition, the following data elements meet the definition of emission data in 40 CFR 2.301(a)(2)(i) and are assigned to the ''Emissions'' data category because they are emissions of pollutants emitted by the source: annual $CO_2$ emissions (reported under 40 CFR 98.236(g)(8)), annual $CH_4$ emissions (reported under 40 CFR 98.236(g)(9)), and annual nitrous oxide ($N_2O$) emissions if the well emissions were vented to a flare (reported under 40 CFR 98.236(g)(10)). For these data elements that are assigned to the ''Emissions'' data category, the commenter did not claim or provide any justification for why these data elements do not meet the definition of emission data. Without corresponding activity data, such as a count of the exploratory wells in a sub-basin or production or flow rate data for a sub-basin containing only exploratory wells, there is no potential to disclose business sensitive information based on these data elements. Therefore, the EPA is not providing an option to delay reporting of these data elements for 2 reporting years.

## IV. Impacts of the Final Amendments to Subpart W

### *A. Impacts of the Final Amendments*

The final amendments to subpart W add monitoring and reporting requirements for reporters in three industry segments: Onshore Petroleum and Natural Gas Production, Onshore Petroleum and Natural Gas Gathering and Boosting, and Onshore Natural Gas Transmission Pipeline. The EPA is adding 213 new data elements to the reporting requirements. The new data elements impose additional burden and costs because, for each of the new data elements that are required to be reported, reporters are required to calculate the data element using readily available data and report the value to the EPA via e-GGRT as part of the annual report currently required under part 98.

The EPA calculated the increase in reporting and recordkeeping burden associated with the new data elements by adjusting labor hours upwards per reporter for all affected industry segments. For all three segments, an estimate of 10 hours per year per reporter was allotted for reporting via e-GGRT and 10 hours per year per reporter was allotted for recordkeeping.

Costs to reporters associated with this rulemaking are expressed as labor costs (*i.e.,* the cost of labor by facility staff to comply with the amendments), capital costs for equipment and travel, and operation and maintenance (O&M) costs.

Reporters in the Onshore Petroleum and Natural Gas Production segment have to monitor and report emissions and data elements associated with oil well completions and workovers with hydraulic fracturing. Reporters in this segment also have to report the well identification numbers associated with individual oil and gas wells. The addition of the requirement to report emissions associated with oil well completions and workovers with hydraulic fracturing is expected to cause an increase in the amount of emissions that count towards determining applicability under subpart W. The addition of reporting requirements for oil wells with hydraulic fracturing is expected to affect 246 existing reporters and to cause approximately 50 new reporters to exceed the reporting threshold for the onshore petroleum and natural gas production facility. These numbers have not changed from proposal.

The 50 new reporters will be required to estimate and report emissions data and related data elements associated with several different emission sources within this new industry segment, including acid gas removal units, associated natural gas venting and flaring, storage tanks, dehydrators, equipment leaks, liquids unloading, and pneumatic devices.

Reporters in the Onshore Petroleum and Natural Gas Gathering and Boosting segment must estimate and report emissions data and related data elements associated with several different emission sources within this new industry segment, including acid gas removal units, storage tanks, blowdown vents, dehydrators, equipment leaks, flare stacks, and pneumatic devices. Approximately 200 new reporters are expected to be subject to subpart W due to the amendments for the Onshore Petroleum and Natural Gas Gathering and Boosting segment in this rulemaking. This number has not changed from proposal.

Reporters in the Onshore Natural Gas Transmission Pipeline segment will need to estimate and report emissions data and related data elements associated with transmission pipeline blowdown activities. Approximately 183 new reporters in this segment are expected to be subject to subpart W. This number increased from 150 to 183 since proposal due to public comment.

The EPA received multiple comments regarding the impacts of the proposed amendments. After evaluating these comments and reviewing other changes from proposal, the EPA revised the impacts assessment slightly from proposal. The final amendments to subpart W are not expected to significantly change the burden calculated at proposal.

The EPA has determined that the cost associated with this final action will be $7,190,235 each year and has worked to minimize burden to reporters where practicable. See the memorandum, ''Assessment of Impacts of the 2015 Final Revisions to Subpart W'' in Docket ID No. EPA–HQ–OAR–2014–0831 for additional information.

### *B. Summary of Comments and Responses*

This section summarizes the major comments and responses related to the impacts of the proposed amendments to subpart W of part 98. We note that numerous commenters asserted that the burden was underestimated, and some provided suggestions for improvement, but most of those comments did not include the detailed information the EPA needed to assess the comment

fully, such as a suggestion for a revised burden estimate, support for the suggestion, and an explanation of why the suggested value is representative of all sources subject to the same requirements. See ''Response to Public Comments on Greenhouse Gas Reporting Rule: 2015 Revisions and Confidentiality Determinations for Petroleum and Natural Gas Systems'' in Docket ID No. EPA–HQ–OAR–2014–0831 for a complete listing of all comments and responses.

*Comment:* One commenter asked for an explanation for the estimate of 200 respondents in the Onshore Petroleum and Natural Gas Gathering and Boosting segment. The commenter noted that the EPA estimated the number of reporters in the Onshore Natural Gas Processing industry segment as 291 reporters. The commenter stated by the nature of the industry, any company with a processing plant will most likely also have an associated gathering system subject to reporting and suggested that the number of reporters in the Onshore Petroleum and Natural Gas Gathering and Boosting industry segment should total 291, at minimum, but potentially more.

*Response:* Due to differences in the definitions of the two industry segments, the EPA disagrees that the number of reporters in the Onshore Petroleum and Natural Gas Gathering and Boosting segment should match the number of reporters in the Onshore Natural Gas Processing segment. The EPA estimate of 200 respondents was based on the regulatory analysis for Office of Pipeline Safety (OPS) safety regulations. In the analysis, it was estimated that 50 percent of the 400 natural gas gathering pipeline operators under regulation are small entities operating small diameter, low pressure (Type B) gathering lines and fifty percent are large diameter, high pressure lines (Type A) potentially subject to the safety regulation (depending upon proximity to population centers).[11]

*Comment:* One commenter noted that the EPA estimated that there are 150 reporters for Onshore Natural Gas Transmission Pipeline facilities at proposal. However, the commenter stated that the EPA should expect 183 reporters in the segment based on the number of operators that are required to complete a PHMSA annual report (PHMSA F–7100–2) or are regulated by FERC under section 311 of the NGPA.

*Response:* The EPA agrees with the suggested change. The preamble to the final amendments, the final Supporting Statement, and the memorandum ''Assessment of Impacts of the 2015 Final Revisions to Subpart W'' (see Docket ID No. EPA–HQ–OAR–2014–0831) have been updated to reflect the change from 150 reporters to 183 reporters in the Onshore Natural Gas Transmission Pipeline segment.

*Comment:* Two commenters objected to the collection of well identification numbers. One commenter noted that collection would require significant resources and would be unduly burdensome on operators. The other commenter stated that the burdens associated with collecting and reporting this data far outweigh any minimal benefits in data quality.

*Response:* The EPA is finalizing the well identification number reporting requirements for well-specific data as proposed, but the EPA is not requiring well identification numbers to be reported in this rulemaking for equipment other than wells. See section II.D of this preamble for additional discussion responding to this comment.

## V. Statutory and Executive Order Reviews

### *A. Executive Order 12866: Regulatory Planning and Review and Executive Order 13563: Improving Regulation and Regulatory Review*

This action is not a significant regulatory action and was therefore not submitted to the Office of Management and Budget (OMB) for review.

In addition, the EPA prepared an analysis of the potential costs associated with the final amendments to subpart W. This analysis is contained in the memorandum ''Assessment of Impacts of the 2015 Final Revisions to Subpart W.'' A copy of the analysis is available in the docket for this action (see Docket ID No. EPA–HQ–OAR–2014–0831) and the analysis is briefly summarized in section IV of this preamble.

### *B. Paperwork Reduction Act (PRA)*

The information collection activities in this rule have been submitted for approval to the OMB under the PRA. The Information Collection Request (ICR) document that the EPA prepared has been assigned EPA ICR number 2300.16. You can find a copy of the ICR in the docket for this rule, and it is briefly summarized here. The information collection requirements are not enforceable until OMB approves them.

This action adds monitoring and reporting requirements for reporters in three industry segments: Onshore Petroleum and Natural Gas Production, Onshore Petroleum and Natural Gas Gathering and Boosting, and Onshore Natural Gas Transmission Pipeline. Data collection complements the *Inventory of U.S. Greenhouse Gas Emissions and Sinks* (Inventory) and provides a critical tool for communities to identify nearby sources of GHGs and provide information to state and local governments. The data can be used to complement atmospheric GHG studies and inform updates to emission inventories. Various activity data are collected that can be used to improve understanding of the occurrence of emissions from a variety of sources.

Data collected must be made available to the public unless the data qualify for CBI treatment under the CAA and EPA regulations. All data determined by the EPA to be CBI are safeguarded in accordance with regulations in 40 CFR chapter 1, part 2, subpart B.

*Respondents/Affected Entities:* The respondents in this information collection include owners and operators of petroleum and natural gas systems facilities that must report their GHG emissions to the EPA to comply with subpart W of part 98.

*Respondent's Obligation To Respond:* The respondent's obligation to respond is mandatory under the authority provided in CAA section 114.

*Estimated Number of Respondents:* Approximately 3,300 respondents per year.

*Frequency of Response:* Annual.

*Total Estimated Burden:* 317,100 hours (per year). Burden is defined at 5 CFR 1320.3(b).

*Total Estimated Cost:* $29.2 million (per year), includes $1.1 million annualized capital and 2.8 million operation & maintenance costs.

An agency may not conduct or sponsor, and a person is not required to respond to, a collection of information unless it displays a currently valid OMB control number. The OMB control numbers for the EPA's regulations in 40 CFR are listed in 40 CFR part 9. When OMB approves this ICR, the Agency will announce that approval in the **Federal Register** and publish a technical amendment to 40 CFR part 9 to display the OMB control number for the approved information collection activities contained in this final rule.

### *C. Regulatory Flexibility Act (RFA)*

I certify that this action will not have a significant economic impact on a substantial number of small entities under the RFA. The small entities

[11] U.S. Department of Transportation. Pipeline and Hazardous Materials Safety Administration. *Draft Regulatory Evaluation, Regulated Natural Gas Gathering Lines, Regulatory Analysis,* Docket RSPA–1998–4868. Available at *www.viadata.com/pipeliner/library_docs/Gatheringanalysis.pdf.*

subject to the requirements of this action are: (1) A small business as defined by the Small Business Administration's regulations at 13 CFR 121.201; (2) a small governmental jurisdiction that is a government of a city, county, town, school district or special district with a population of less than 50,000; and (3) a small organization that is any not-for-profit enterprise which is independently owned and operated and is not dominant in its field.

The Agency has determined that a few small businesses may experience an insignificant impact. Details of this analysis are presented in section IV.B of the preamble to the proposed amendments (79 FR 76267; December 9, 2014).

Although this final rule will not have a significant economic impact on a substantial number of small entities, the EPA nonetheless has tried to reduce the impact of this rule on small entities. As part of the process of finalizing the subpart W 2010 final rule, the EPA took several steps to evaluate the effect of the rule on small entities. For example, the EPA determined appropriate thresholds that reduced the number of small businesses reporting. In addition, the EPA supports a ''help desk'' for the rule, which is available to answer questions on the provisions in the rule. Finally, the EPA continues to conduct significant outreach on the GHG reporting rule and maintains an ''open door'' policy for stakeholders to help inform the EPA's understanding of key issues for the industries.

*D. Unfunded Mandates Reform Act (UMRA)*

This action does not contain an unfunded mandate of $100 million or more as described in UMRA, 2 U.S.C. 1531–1538, and does not significantly or uniquely affect small governments. This action imposes no enforceable duty on any state, local, or tribal governments or the private sector.

*E. Executive Order 13132: Federalism*

This action does not have federalism implications. It will not have substantial direct effects on the states, on the relationship between the national government and the states, or on the distribution of power and responsibilities among the various levels of government.

*F. Executive Order 13175: Consultation and Coordination With Indian Tribal Governments*

This action has tribal implications. However, it will neither impose substantial direct compliance costs on federally recognized tribal governments, nor preempt tribal law. This regulation will apply directly to petroleum and natural gas facilities that emit GHGs. Although few facilities that will be subject to the rule are likely to be owned by tribal governments, the EPA has sought opportunities to provide information to tribal governments and representatives during the development of the proposed and final subpart W that was promulgated on November 30, 2010 (75 FR 74458).

The EPA consulted with tribal officials under the EPA Policy on Consultation and Coordination with Indian Tribes early in the process of developing this regulation to permit them to have meaningful and timely input into its development. A summary of that consultation is provided in section IV.F of the preamble to the re-proposal of subpart W published on April 12, 2010 (75 FR 18608), and section IV.F of the preamble to the subpart W 2010 final rule published on November 30, 2010 (75 FR 74458).

*G. Executive Order 13045: Protection of Children From Environmental Health Risks and Safety Risks*

The EPA interprets Executive Order 13045 as applying only to those regulatory actions that concern environmental health or safety risks, that the EPA has reason to believe may disproportionately affect children, per the definition of ''covered regulatory action'' in section 2–202 of the Executive Order. This action is not subject to Executive Order 13045 because it does not concern an environmental health risk or safety risks.

*H. Executive Order 13211: Actions That Significantly Affect Energy Supply, Distribution, or Use*

This action is not subject to Executive Order 13211, because it is not a significant regulatory action under Executive Order 12866.

*I. National Technology Transfer and Advancement Act (NTTAA)*

This rulemaking does not involve technical standards.

*J. Executive Order 12898: Federal Actions To Address Environmental Justice in Minority Populations and Low-Income Populations*

The EPA believes the human health or environmental risk addressed by this action will **not** have potential disproportionately high and adverse human health or environmental effects on minority, low-income or indigenous populations because it does not affect the level of protection provided to human health or the environment. Instead, this rule addresses information collection and reporting procedures.

*K. Congressional Review Act (CRA)*

This action is subject to the CRA, and the EPA will submit a rule report to each House of the Congress and to the Comptroller General of the United States. This action is not a ''major rule'' as defined by 5 U.S.C. 804(2).

**List of Subjects in 40 CFR Part 98**

Environmental protection, Administrative practice and procedure, Greenhouse gases, Reporting and recordkeeping requirements.

Dated: October 1, 2015.

**Gina McCarthy,**

*Administrator.*

For the reasons stated in the preamble, title 40, chapter I, of the Code of Federal Regulations is amended as follows:

## PART 98—MANDATORY GREENHOUSE GAS REPORTING

■ 1. The authority citation for part 98 continues to read as follows:

**Authority:** 42 U.S.C. 7401, *et seq.*

## Subpart W—Petroleum and Natural Gas Systems

■ 2. Section 98.230 is amended by adding paragraphs (a)(9) and (10) to read as follows:

**§ 98.230 Definition of the source category.**

(a) * * *

(9) *Onshore petroleum and natural gas gathering and boosting.* Onshore petroleum and natural gas gathering and boosting means gathering pipelines and other equipment used to collect petroleum and/or natural gas from onshore production gas or oil wells and used to compress, dehydrate, sweeten, or transport the petroleum and/or natural gas to a natural gas processing facility, a natural gas transmission pipeline or to a natural gas distribution pipeline. Gathering and boosting equipment includes, but is not limited to gathering pipelines, separators, compressors, acid gas removal units, dehydrators, pneumatic devices/pumps, storage vessels, engines, boilers, heaters, and flares. Gathering and boosting equipment does not include equipment reported under any other industry segment defined in this section. Gathering pipelines operating on a vacuum and gathering pipelines with a GOR) less than 300 standard cubic feet per stock tank barrel (scf/STB) are not included in this industry segment (oil

here refers to hydrocarbon liquids of all API gravities).

(10) *Onshore natural gas transmission pipeline.* Onshore natural gas transmission pipeline means all natural gas transmission pipelines as defined in § 98.238.

* * * * *

■ 3. Section 98.231 is amended by revising paragraph (a) to read as follows:

**§ 98.231 Reporting threshold.**

(a) You must report GHG emissions under this subpart if your facility contains petroleum and natural gas systems and the facility meets the requirements of § 98.2(a)(2), except for the industry segments in paragraphs (a)(1) through (4) of this section.

(1) Facilities must report emissions from the onshore petroleum and natural gas production industry segment only if emission sources specified in § 98.232(c) emit 25,000 metric tons of $CO_2$ equivalent or more per year.

(2) Facilities must report emissions from the natural gas distribution industry segment only if emission sources specified in § 98.232(i) emit 25,000 metric tons of $CO_2$ equivalent or more per year.

(3) Facilities must report emissions from the onshore petroleum and natural gas gathering and boosting industry segment only if emission sources specified in § 98.232(j) emit 25,000 metric tons of $CO_2$ equivalent or more per year.

(4) Facilities must report emissions from the onshore natural gas transmission pipeline industry segment only if emission sources specified in § 98.232(m) emit 25,000 metric tons of $CO_2$ equivalent or more per year.

* * * * *

■ 4. Section 98.232 is amended by:
■ a. Revising paragraphs (a) and (c)(6) and (8);
■ b. Adding paragraph (j);
■ c. Revising paragraph (k); and
■ d. Adding paragraph (m).

The revisions and additions read as follows:

**§ 98.232 GHGs to report.**

(a) You must report $CO_2$, $CH_4$, and $N_2O$ emissions from each industry segment specified in paragraphs (b) through (j) and (m) of this section, $CO_2$, $CH_4$, and $N_2O$ emissions from each flare as specified in paragraphs (b) through (j) of this section, and stationary and portable combustion emissions as applicable as specified in paragraph (k) of this section.

* * * * *

(c) * * *

(6) Well venting during well completions with hydraulic fracturing that have a GOR of 300 scf/STB or greater (oil here refers to hydrocarbon liquids produced of all API gravities).

* * * * *

(8) Well venting during well workovers with hydraulic fracturing that have a GOR of 300 scf/STB or greater (oil here refers to hydrocarbon liquids produced of all API gravities).

* * * * *

(j) For an onshore petroleum and natural gas gathering and boosting facility, report $CO_2$, $CH_4$, and $N_2O$ emissions from the following source types:

(1) Natural gas pneumatic device venting.

(2) Natural gas driven pneumatic pump venting.

(3) Acid gas removal vents.

(4) Dehydrator vents.

(5) Blowdown vent stacks.

(6) Storage tank vented emissions.

(7) Flare stack emissions.

(8) Centrifugal compressor venting.

(9) Reciprocating compressor venting.

(10) Equipment leaks from valves, connectors, open ended lines, pressure relief valves, pumps, flanges, and other equipment leak sources (such as instruments, loading arms, stuffing boxes, compressor seals, dump lever arms, and breather caps).

(11) Gathering pipeline equipment leaks.

(12) You must use the methods in § 98.233(z) and report under this subpart the emissions of $CO_2$, $CH_4$, and $N_2O$ from stationary or portable fuel combustion equipment that cannot move on roadways under its own power and drive train, and that is located at an onshore petroleum and natural gas gathering and boosting facility as defined in § 98.238. Stationary or portable equipment includes the following equipment, which are integral to the movement of natural gas: Natural gas dehydrators, natural gas compressors, electrical generators, steam boilers, and process heaters.

(k) Report under subpart C of this part (General Stationary Fuel Combustion Sources) the emissions of $CO_2$, $CH_4$, and $N_2O$ from each stationary fuel combustion unit by following the requirements of subpart C except for facilities under onshore petroleum and natural gas production, onshore petroleum and natural gas gathering and boosting, and natural gas distribution. Onshore petroleum and natural gas production facilities must report stationary and portable combustion emissions as specified in paragraph (c) of this section. Natural gas distribution facilities must report stationary combustion emissions as specified in paragraph (i) of this section. Onshore petroleum and natural gas gathering and boosting facilities must report stationary and portable combustion emissions as specified in paragraph (j) of this section.

* * * * *

(m) For onshore natural gas transmission pipeline, report pipeline blowdown $CO_2$ and $CH_4$ emissions from blowdown vent stacks.

■ 5. Section 98.233 is amended by:
■ a. Revising the parameters ''$EF_t$'' and ''$GHG_i$'' of Equation W–1 in paragraph (a);
■ b. Revising paragraph (a)(2);
■ c. Revising the parameter ''EF'' of Equation W–2 in paragraph (c);
■ d. Revising paragraph (d)(8)(iii);
■ e. Revising paragraphs (g) introductory text, (g)(1) introductory text, (g)(1)(i), and paragraph (g)(1)(ii) heading;
■ f. Revising the parameters ''$FRM_s$,'' ''$FR_{s,p}$'' and ''$PR_{s,p}$'' of Equation W–12A in paragraph (g)(1)(iii);
■ g. Revising the parameters ''$FRM_i$,'' and ''$PR_{s,p}$'' of Equation W–12B in paragraph (g)(1)(iv);
■ h. Revising paragraphs (g)(1)(v) and (vi);
■ i. Adding paragraph (g)(1)(vii);
■ j. Revising paragraph (g)(2) introductory text;
■ k. Adding paragraph (g)(2)(iv);
■ l. Revising paragraph (g)(4) introductory text;
■ m. Revising paragraph (i)(2) introductory text;
■ n. Revising the parameters ''$T_a$'' and ''$P_a$'' of Equation W–14A in paragraph (i)(2)(i);
■ o. Revising paragraphs (j) introductory text, (j)(1) through (3), and (j)(6);
■ p. Revising paragraph (n)(2)(i);
■ q. Revising paragraphs (o) introductory text and (o)(10);
■ r. Revising paragraphs (p) introductory text and (p)(10);
■ s. Revising paragraphs (r) introductory text, (r)(2) introductory text, and (r)(2)(i);
■ t. Revising paragraphs (u)(2)(i) and (iii); and
■ x. Revising paragraphs (z) introductory text and (z)(1)(ii).

The revisions and additions read as follows:

**§ 98.233 Calculating GHG emissions.**

* * * * *

(a) * * *

* * * * *

$EF_t$ = Population emission factors for natural gas pneumatic device vents (in standard cubic feet per hour per device) of each type ''t'' listed in Tables W–1A, W–3, and W–4 of this subpart for onshore petroleum and natural gas production,

onshore natural gas transmission compression, and underground natural gas storage facilities, respectively. Onshore petroleum and natural gas gathering and boosting facilities must use the population emission factors listed in Table W–1A of this subpart.

$GHG_i$ = For onshore petroleum and natural gas production facilities, onshore petroleum and natural gas gathering and boosting facilities, onshore natural gas transmission compression facilities, and underground natural gas storage facilities, concentration of $GHG_i$, $CH_4$ or $CO_2$, in produced natural gas or processed natural gas for each facility as specified in paragraphs (u)(2)(i), (iii), and (iv) of this section.

* * * * *

(2) For the onshore petroleum and natural gas production industry segment, you have the option in the first two consecutive calendar years to determine ''$Count_t$'' for Equation W–1 of this section for each type of natural gas pneumatic device (continuous high bleed, continuous low bleed, and intermittent bleed) using engineering estimates based on best available data. For the onshore petroleum and natural gas gathering and boosting industry segment, you have the option in the first two consecutive calendar years to determine ''$Count_t$'' for Equation W–1 for each type of natural gas pneumatic device (continuous high bleed, continuous low bleed, and intermittent bleed) using engineering estimates based on best available data.

* * * * *

(c) * * *

* * * * *

EF = Population emissions factors for natural gas driven pneumatic pumps (in standard cubic feet per hour per pump) listed in Table W–1A of this subpart for onshore petroleum and natural gas production and onshore petroleum and natural gas gathering and boosting facilities.

* * * * *

(d) * * *

(8) * * *

(iii) If a continuous gas analyzer is not available or installed, you may use the outlet pipeline quality specification for $CO_2$ in natural gas.

* * * * *

(g) *Well venting during completions and workovers with hydraulic fracturing.* Calculate annual volumetric natural gas emissions from gas well and oil well venting during completions and workovers involving hydraulic fracturing using Equation W–10A or Equation W–10B of this section. Equation W–10A applies to well venting when the gas flowback rate is measured from a specified number of example completions or workovers and Equation W–10B applies when the gas flowback vent or flare volume is measured for each completion or workover. Completion and workover activities are separated into two periods, an initial period when flowback is routed to open pits or tanks and a subsequent period when gas content is sufficient to route the flowback to a separator or when the gas content is sufficient to allow measurement by the devices specified in paragraph (g)(1) of this section, regardless of whether a separator is actually utilized. If you elect to use Equation W–10A, you must follow the procedures specified in paragraph (g)(1). If you elect to use Equation W–10B, you must use a recording flow meter installed on the vent line, downstream of a separator and ahead of a flare or vent, to measure the gas flowback. For either equation, emissions must be calculated separately for completions and workovers, for each sub-basin, and for each well type combination identified in paragraph (g)(2) of this section. You must calculate $CH_4$ and $CO_2$ volumetric and mass emissions as specified in paragraph (g)(3) of this section. If emissions from well venting during completions and workovers with hydraulic fracturing are routed to a flare, you must calculate $CH_4$, $CO_2$, and $N_2O$ annual emissions as specified in paragraph (g)(4) of this section.

$$E_{s,n} = \sum_{p=1}^{W} \left[ T_{p,s} \times FRM_s \times PR_{s,p} - EnF_{s,p} + \left[ T_{p,i} \times FRM_i \div 2 \times PR_{s,p} \right] \right] \quad \text{(Eq. W-10A)}$$

$$E_{s,n} = \sum_{p=1}^{W} \left[ FV_{s,p} - EnF_{s,p} + \left[ T_{p,i} \times FR_{p,i} \div 2 \right] \right] \quad \text{(Eq. W-10B)}$$

Where:

$E_{s,n}$ = Annual volumetric natural gas emissions in standard cubic feet from gas venting during well completions or workovers following hydraulic fracturing for each sub-basin and well type combination.

W = Total number of wells completed or worked over using hydraulic fracturing in a sub-basin and well type combination.

$T_{p,s}$ = Cumulative amount of time of flowback, after sufficient quantities of gas are present to enable separation, where gas vented or flared for the completion or workover, in hours, for each well, p, in a sub-basin and well type combination during the reporting year. This may include non-contiguous periods of venting or flaring.

$T_{p,i}$ = Cumulative amount of time of flowback to open tanks/pits, from when gas is first detected until sufficient quantities of gas are present to enable separation, for the completion or workover, in hours, for each well, p, in a sub-basin and well type combination during the reporting year. This may include non-contiguous periods of routing to open tanks/pits but does not include periods when the oil well ceases to produce fluids to the surface.

$FRM_s$ = Ratio of average gas flowback, during the period when sufficient quantities of gas are present to enable separation, of well completions and workovers from hydraulic fracturing to 30-day production rate for the sub-basin and well type combination, calculated using procedures specified in paragraph (g)(1)(iii) of this section.

$FRM_i$ = Ratio of initial gas flowback rate during well completions and workovers from hydraulic fracturing to 30-day gas production rate for the sub-basin and well type combination, calculated using procedures specified in paragraph (g)(1)(iv) of this section, for the period of flow to open tanks/pits.

$PR_{s,p}$ = Average gas production flow rate during the first 30 days of production after completions of newly drilled wells or well workovers using hydraulic fracturing in standard cubic feet per hour of each well p, that was measured in the sub-basin and well type combination. If applicable, $PR_{s,p}$ may be calculated for oil wells using procedures specified in paragraph (g)(1)(vii) of this section.

$EnF_{s,p}$ = Volume of $N_2$ injected gas in cubic feet at standard conditions that was injected into the reservoir during an energized fracture job or during flowback for each well, p, as determined by using an appropriate meter according to methods described in § 98.234(b), or by using receipts of gas purchases that are used for the energized fracture job or injection during flowback. Convert to standard conditions using paragraph (t) of this section. If the fracture process did

not inject gas into the reservoir or if the injected gas is $CO_2$ then $EnF_{s,p}$ is 0.

$FV_{s,p}$ = Flow volume of vented or flared gas for each well, p, in standard cubic feet measured using a recording flow meter (digital or analog) on the vent line to measure gas flowback during the separation period of the completion or workover according to methods set forth in § 98.234(b).

$FR_{p,i}$ = Flow rate vented or flared of each well, p, in standard cubic feet per hour measured using a recording flow meter (digital or analog) on the vent line to measure the flowback, at the beginning of the period of time when sufficient quantities of gas are present to enable separation, of the completion or workover according to methods set forth in § 98.234(b).

(1) If you elect to use Equation W–10A of this section on gas wells, you must use Calculation Method 1 as specified in paragraph (g)(1)(i) of this section, or Calculation Method 2 as specified in paragraph (g)(1)(ii) of this section, to determine the value of $FRM_s$ and $FRM_i$. If you elect to use Equation W–10A of this section on oil wells, you must use Calculation Method 1 as specified in paragraph (g)(1)(i) to determine the value of $FRM_s$ and $FRM_i$. These values must be based on the flow rate for flowback gases, once sufficient gas is present to enable separation. The number of measurements or calculations required to estimate $FRM_s$ and $FRM_i$ must be determined individually for completions and workovers per sub-basin and well type combination as follows: Complete measurements or calculations for at least one completion or workover for less than or equal to 25 completions or workovers for each well type combination within a sub-basin; complete measurements or calculations for at least two completions or workovers for 26 to 50 completions or workovers for each sub-basin and well type combination; complete measurements or calculations for at least three completions or workovers for 51 to 100 completions or workovers for each sub-basin and well type combination; complete measurements or calculations for at least four completions or workovers for 101 to 250 completions or workovers for each sub-basin and well type combination; and complete measurements or calculations for at least five completions or workovers for greater than 250 completions or workovers for each sub-basin and well type combination.

(i) *Calculation Method 1.* You must use Equation W–12A of this section as specified in paragraph (g)(1)(iii) of this section to determine the value of $FRM_s$. You must use Equation W–12B of this section as specified in paragraph (g)(1)(iv) of this section to determine the value of $FRM_i$. The procedures specified in paragraphs (g)(1)(v) and (vi) of this section also apply. When making gas flowback measurements for use in Equations W–12A and W–12B of this section, you must use a recording flow meter (digital or analog) installed on the vent line, downstream of a separator and ahead of a flare or vent, to measure the gas flowback rates in units of standard cubic feet per hour according to methods set forth in § 98.234(b).

(ii) *Calculation Method 2 (for gas wells).* * * *

(iii) * * *

* * * * *

$FRM_s$ = Ratio of average gas flowback rate, during the period of time when sufficient quantities of gas are present to enable separation, of well completions and workovers from hydraulic fracturing to 30-day gas production rate for each sub-basin and well type combination.

$FR_{s,p}$ = Measured average gas flowback rate from Calculation Method 1 described in paragraph (g)(1)(i) of this section or calculated average flowback rate from Calculation Method 2 described in paragraph (g)(1)(ii) of this section, during the separation period in standard cubic feet per hour for well(s) p for each sub-basin and well type combination. Convert measured and calculated $FR_a$ values from actual conditions upstream of the restriction orifice ($FR_a$) to standard conditions ($FR_{s,p}$) for each well p using Equation W–33 in paragraph (t) of this section. You may not use flow volume as used in Equation W–10B of this section converted to a flow rate for this parameter.

$PR_{s,p}$ = Average gas production flow rate during the first 30 days of production after completions of newly drilled wells or well workovers using hydraulic fracturing, in standard cubic feet per hour for each well, p, that was measured in the sub-basin and well type combination. For oil wells for which production is not measured continuously during the first 30 days of production, the average flow rate may be based on individual well production tests conducted within the first 30 days of production. Alternatively, if applicable, $PR_{s,p}$ may be calculated for oil wells using procedures specified in paragraph (g)(1)(vii) of this section.

* * * * *

(iv) * * *

* * * * *

$FRM_i$ = Ratio of initial gas flowback rate during well completions and workovers from hydraulic fracturing to 30-day gas production rate for the sub-basin and well type combination, for the period of flow to open tanks/pits.

* * * * *

$PR_{s,p}$ = Average gas production flow rate during the first 30-days of production after completions of newly drilled wells or well workovers using hydraulic fracturing, in standard cubic feet per hour of each well, p, that was measured in the sub-basin and well type combination. For oil wells for which production is not measured continuously during the first 30 days of production, the average flow rate may be based on individual well production tests conducted within the first 30 days of production. Alternatively, if applicable, $PR_{s,p}$ may be calculated for oil wells using procedures specified in paragraph (g)(1)(vii) of this section.

* * * * *

(v) For Equation W–10A of this section, the ratio of gas flowback rate during well completions and workovers from hydraulic fracturing to 30-day gas production rate are applied to all well completions and well workovers, respectively, in the sub-basin and well type combination for the total number of hours of flowback and for the first 30 day average gas production rate for each of these wells.

(vi) For Equations W–12A and W–12B of this section, calculate new flowback rates for well completions and well workovers in each sub-basin and well type combination once every two years starting in the first calendar year of data collection.

(vii) For oil wells where the gas production rate is not metered and you elect to use Equation W–10A of this section, calculate the average gas production rate ($PR_{s,p}$) using Equation W–12C of this section. If GOR cannot be determined from your available data, then you must use one of the procedures specified in paragraph (g)(1)(vii)(A) or (B) of this section to determine GOR. If GOR from each well is not available, use the GOR from a cluster of wells in the same sub-basin category.

$$PR_{s,p} = GOR_p * \frac{V_p}{720} \qquad \text{(Eq. W-12C)}$$

Where:

$PR_{s,p}$ = Average gas production flow rate during the first 30 days of production after completions of newly drilled wells or well workovers using hydraulic fracturing in standard cubic feet per hour of well p, in the sub-basin and well type combination.

$GOR_p$ = Average gas to oil ratio during the first 30 days of production after completions of newly drilled wells or workovers using hydraulic fracturing in standard cubic feet of gas per barrel of oil for each well p, that was measured in the sub-basin and well type combination; oil here refers to hydrocarbon liquids produced of all API gravities.

$V_p$ = Volume of oil produced during the first 30 days of production after completions of newly drilled wells or well workovers using hydraulic fracturing in barrels of each well p, that was measured in the sub-basin and well type combination.

720 = Conversion from 30 days of production to hourly production rate.

(A) You may use an appropriate standard method published by a consensus-based standards organization if such a method exists.

(B) You may use an industry standard practice as described in § 98.234(b).

(2) For paragraphs (g) introductory text and (g)(1) of this section, measurements and calculations are completed separately for workovers and completions per sub-basin and well type combination. A well type combination is a unique combination of the parameters listed in paragraphs (g)(2)(i) through (iv) of this section.

* * * * *

(iv) Oil well or gas well.

* * * * *

(4) Calculate annual emissions from well venting during well completions and workovers from hydraulic fracturing where all or a portion of the gas is flared as specified in paragraphs (g)(4)(i) and (ii) of this section.

* * * * *

(i) * * *

(2) *Method for determining emissions from blowdown vent stacks according to equipment or event type.* If you elect to determine emissions according to each equipment or event type, using unique physical volumes as calculated in paragraph (i)(1) of this section, you must calculate emissions as specified in paragraph (i)(2)(i) of this section and either paragraph (i)(2)(ii) or, if applicable, paragraph (i)(2)(iii) of this section for each equipment or event type. For industry segments other than onshore natural gas transmission pipeline, equipment or event types must be grouped into the following seven categories: Facility piping (*i.e.,* piping within the facility boundary other than physical volumes associated with distribution pipelines), pipeline venting (*i.e.,* physical volumes associated with distribution pipelines vented within the facility boundary), compressors, scrubbers/strainers, pig launchers and receivers, emergency shutdowns (this category includes emergency shutdown blowdown emissions regardless of equipment type), and all other equipment with a physical volume greater than or equal to 50 cubic feet. If a blowdown event resulted in emissions from multiple equipment types and the emissions cannot be apportioned to the different equipment types, then categorize the blowdown event as the equipment type that represented the largest portion of the emissions for the blowdown event. For the onshore natural gas transmission pipeline segment, pipeline segments or event types must be grouped into the following eight categories: Pipeline integrity work (*e.g.,* the preparation work of modifying facilities, ongoing assessments, maintenance or mitigation), traditional operations or pipeline maintenance, equipment replacement or repair (*e.g.,* valves), pipe abandonment, new construction or modification of pipelines including commissioning and change of service, operational precaution during activities (*e.g.* excavation near pipelines), emergency shutdowns including pipeline incidents as defined in 49 CFR 191.3, and all other pipeline segments with a physical volume greater than or equal to 50 cubic feet. If a blowdown event resulted in emissions from multiple categories and the emissions cannot be apportioned to the different categories, then categorize the blowdown event in the category that represented the largest portion of the emissions for the blowdown event.

(i) * * *

* * * * *

$T_a$ = Temperature at actual conditions in the unique physical volume (°F). For emergency blowdowns at onshore petroleum and natural gas gathering and boosting facilities, engineering estimates based on best available information may be used to determine the temperature.

* * * * *

$P_a$ = Absolute pressure at actual conditions in the unique physical volume (psia). For emergency blowdowns at onshore petroleum and natural gas gathering and boosting facilities, engineering estimates based on best available information may be used to determine the pressure.

* * * * *

(j) *Onshore production and onshore petroleum and natural gas gathering and boosting storage tanks.* Calculate $CH_4$, $CO_2$, and $N_2O$ (when flared) emissions from atmospheric pressure fixed roof storage tanks receiving hydrocarbon produced liquids from onshore petroleum and natural gas production facilities and onshore petroleum and natural gas gathering and boosting facilities (including stationary liquid storage not owned or operated by the reporter), as specified in this paragraph (j). For gas-liquid separators or onshore petroleum and natural gas gathering and boosting non-separator equipment (*e.g.,* stabilizers, slug catchers) with annual average daily throughput of oil greater than or equal to 10 barrels per day, calculate annual $CH_4$ and $CO_2$ using Calculation Method 1 or 2 as specified in paragraphs (j)(1) and (2) of this section. For wells flowing directly to atmospheric storage tanks without passing through a separator with throughput greater than or equal to 10 barrels per day, calculate annual $CH_4$ and $CO_2$ emissions using Calculation Method 2 as specified in paragraph (j)(2) of this section. For hydrocarbon liquids flowing to gas-liquid separators or non-separator equipment or directly to atmospheric storage tanks with throughput less than 10 barrels per day, use Calculation Method 3 as specified in paragraph (j)(3) of this section. If you use Calculation Method 1 or Calculation Method 2 for separators, you must also calculate emissions that may have occurred due to dump valves not closing properly using the method specified in paragraph (j)(6) of this section. If emissions from atmospheric pressure fixed roof storage tanks are routed to a vapor recovery system, you must adjust the emissions downward according to paragraph (j)(4) of this section. If emissions from atmospheric pressure fixed roof storage tanks are routed to a flare, you must calculate $CH_4$, $CO_2$, and $N_2O$ annual emissions as specified in paragraph (j)(5) of this section.

(1) *Calculation Method 1.* Calculate annual $CH_4$ and $CO_2$ emissions from onshore production storage tanks and onshore petroleum and natural gas gathering and boosting storage tanks using operating conditions in the last gas-liquid separator or non-separator equipment before liquid transfer to storage tanks. Calculate flashing emissions with a software program, such as AspenTech HYSYS® or API 4697 E&P Tank, that uses the Peng-Robinson equation of state, models flashing emissions, and speciates $CH_4$ and $CO_2$ emissions that will result when the oil from the separator or non-separator equipment enters an atmospheric pressure storage tank. The following parameters must be determined for typical operating

conditions over the year by engineering estimate and process knowledge based on best available data, and must be used at a minimum to characterize emissions from liquid transferred to tanks:

(i) Separator or non-separator equipment temperature.

(ii) Separator or non-separator equipment pressure.

(iii) Sales oil or stabilized oil API gravity.

(iv) Sales oil or stabilized oil production rate.

(v) Ambient air temperature.

(vi) Ambient air pressure.

(vii) Separator or non-separator equipment oil composition and Reid vapor pressure. If this data is not available, determine these parameters by using one of the methods described in paragraphs (j)(1)(vii)(A) through (C) of this section.

(A) If separator or non-separator equipment oil composition and Reid vapor pressure default data are provided with the software program, select the default values that most closely match your separator or non-separator equipment pressure first, and API gravity secondarily.

(B) If separator or non-separator equipment oil composition and Reid vapor pressure data are available through your previous analysis, select the latest available analysis that is representative of produced crude oil or condensate from the sub-basin category for onshore petroleum and natural gas production or from the county for onshore petroleum and natural gas gathering and boosting.

(C) Analyze a representative sample of separator or non-separator equipment oil in each sub-basin category for onshore petroleum and natural gas production or each county for onshore petroleum and natural gas gathering and boosting for oil composition and Reid vapor pressure using an appropriate standard method published by a consensus-based standards organization.

(2) *Calculation Method 2.* Calculate annual $CH_4$ and $CO_2$ emissions using the methods in paragraph (j)(2)(i) of this section for gas-liquid separators with annual average daily throughput of oil greater than or equal to 10 barrels per day. Calculate annual $CH_4$ and $CO_2$ emissions using the methods in paragraph (j)(2)(ii) of this section for wells with annual average daily oil production greater than or equal to 10 barrels per day that flow directly to atmospheric storage tanks in onshore petroleum and natural gas production and onshore petroleum and natural gas gathering and boosting (if applicable). Calculate annual $CH_4$ and $CO_2$ emissions using the methods in paragraph (j)(2)(iii) of this section for non-separator equipment with annual average daily hydrocarbon liquids throughput greater than or equal to 10 barrels per day that flow directly to atmospheric storage tanks in onshore petroleum and natural gas gathering and boosting.

(i) *Flow to storage tank after passing through a separator.* Assume that all of the $CH_4$ and $CO_2$ in solution at separator temperature and pressure is emitted from oil sent to storage tanks. You may use an appropriate standard method published by a consensus-based standards organization if such a method exists or you may use an industry standard practice as described in § 98.234(b) to sample and analyze separator oil composition at separator pressure and temperature.

(ii) *Flow to storage tank direct from wells.* Calculate $CH_4$ and $CO_2$ emissions using either of the methods in paragraph (j)(2)(ii)(A) or (B) of this section.

(A) If well production oil and gas compositions are available through a previous analysis, select the latest available analysis that is representative of produced oil and gas from the sub-basin category and assume all of the $CH_4$ and $CO_2$ in both oil and gas are emitted from the tank.

(B) If well production oil and gas compositions are not available, use default oil and gas compositions in software programs, such as API 4697 E&P Tank, that most closely match the well production gas/oil ratio and API gravity and assume all of the $CH_4$ and $CO_2$ in both oil and gas are emitted from the tank.

(iii) *Flow to storage tank direct from non-separator equipment.* Calculate $CH_4$ and $CO_2$ emissions using either of the methods in paragraph (j)(2)(iii)(A) or (B) of this section.

(A) If other non-separator equipment liquid and gas compositions are available through a previous analysis, select the latest available analysis that is representative of liquid and gas from non-separator equipment in the same county and assume all of the $CH_4$ and $CO_2$ in both hydrocarbon liquids and gas are emitted from the tank.

(B) If non-separator equipment liquid and gas compositions are not available, use default liquid and gas compositions in software programs, such as API 4697 E&P Tank, that most closely match the non-separator equipment gas/liquid ratio and API gravity and assume all of the $CH_4$ and $CO_2$ in both hydrocarbon liquids and gas are emitted from the tank.

(3) *Calculation Method 3.* Calculate $CH_4$ and $CO_2$ emissions using Equation W–15 of this section:

$$E_{s,i} = EF_i * Count * 1000 \qquad \text{(Eq. W-15)}$$

Where:

$E_{s,i}$ = Annual total volumetric GHG emissions (either $CO_2$ or $CH_4$) at standard conditions in cubic feet.

$EF_i$ = Population emission factor for separators, wells, or non-separator equipment in thousand standard cubic feet per separator, well, or non-separator equipment per year, for crude oil use 4.2 for $CH_4$ and 2.8 for $CO_2$ at 60 °F and 14.7 psia, and for gas condensate use 17.6 for $CH_4$ and 2.8 for $CO_2$ at 60 °F and 14.7 psia.

Count = Total number of separators, wells, or non-separator equipment with annual average daily throughput less than 10 barrels per day. Count only separators, wells, or non-separator equipment that feed oil directly to the storage tank.

1,000 = Conversion from thousand standard cubic feet to standard cubic feet.

* * * * *

(6) If you use Calculation Method 1 or Calculation Method 2 in paragraph (j)(1) or (2) of this section, calculate emissions from occurrences of gas-liquid separator liquid dump valves not closing during the calendar year by using Equation W–16 of this section.

$$E_{s,i,o} = \left( CF_n * \frac{E_n}{8760} * T_n \right) \qquad \text{(Eq. W-16)}$$

Where:

$E_{s,i,o}$ = Annual volumetric GHG emissions at standard conditions from each storage tank in cubic feet that resulted from the dump valve on the gas-liquid separator not closing properly.

$E_n$ = Storage tank emissions as determined in paragraphs (j)(1), (j)(2) and, if applicable, (j)(4) of this section in standard cubic feet per year.

$T_n$ = Total time a dump valve is not closing properly in the calendar year in hours. Estimate $T_n$ based on maintenance, operations, or routine separator inspections that indicate the period of time when the valve was malfunctioning in open or partially open position.

$CF_n$ = Correction factor for tank emissions for time period $T_n$ is 2.87 for crude oil production. Correction factor for tank emissions for time period $T_n$ is 4.37 for gas condensate production.

8,760 = Conversion to hourly emissions.

* * * * *

(n) * * *

(2) * * *

(i) For onshore natural gas production and onshore petroleum and natural gas gathering and boosting, determine the GHG mole fraction using paragraph (u)(2)(i) of this section.

* * * * *

(o) *Centrifugal compressor venting.* If you are required to report emissions from centrifugal compressor venting as specified in § 98.232(d)(2), (e)(2), (f)(2), (g)(2), and (h)(2), you must conduct volumetric emission measurements specified in paragraph (o)(1) of this section using methods specified in paragraphs (o)(2) through (5) of this section; perform calculations specified in paragraphs (o)(6) through (9) of this section; and calculate $CH_4$ and $CO_2$ mass emissions as specified in paragraph (o)(11) of this section. If emissions from a compressor source are routed to a flare, paragraphs (o)(1) through (11) do not apply and instead you must calculate $CH_4$, $CO_2$, and $N_2O$ emissions as specified in paragraph (o)(12) of this section. If emissions from a compressor source are captured for fuel use or are routed to a thermal oxidizer, paragraphs (o)(1) through (12) do not apply and instead you must calculate and report emissions as specified in subpart C of this part. If emissions from a compressor source are routed to vapor recovery, paragraphs (o)(1) through (12) do not apply. If you are required to report emissions from centrifugal compressor venting at an onshore petroleum and natural gas production facility as specified in § 98.232(c)(19) or an onshore petroleum and natural gas gathering and boosting facility as specified in § 98.232(j)(8), you must calculate volumetric emissions as specified in paragraph (o)(10); and calculate $CH_4$ and $CO_2$ mass emissions as specified in paragraph (o)(11).

* * * * *

(10) *Method for calculating volumetric GHG emissions from wet seal oil degassing vents at an onshore petroleum and natural gas production facility or an onshore petroleum and natural gas gathering and boosting facility.* You must calculate emissions from centrifugal compressor wet seal oil degassing vents at an onshore petroleum and natural gas production facility or an onshore petroleum and natural gas gathering and boosting facility using Equation W–25 of this section.

$$E_{s,i} = Count * EF_{i,s} \qquad \text{(Eq. W-25)}$$

Where:

$E_{s,i}$ = Annual volumetric $GHG_i$ (either $CH_4$ or $CO_2$) emissions from centrifugal compressor wet seals, at standard conditions, in cubic feet.

Count = Total number of centrifugal compressors that have wet seal oil degassing vents.

$EF_{i,s}$ = Emission factor for $GHG_i$. Use $1.2 \times 10^7$ standard cubic feet per year per compressor for $CH_4$ and $5.30 \times 10^5$ standard cubic feet per year per compressor for $CO_2$ at 60 °F and 14.7 psia.

* * * * *

(p) *Reciprocating compressor venting.* If you are required to report emissions from reciprocating compressor venting as specified in § 98.232(d)(1), (e)(1), (f)(1), (g)(1), and (h)(1), you must conduct volumetric emission measurements specified in paragraph (p)(1) of this section using methods specified in paragraphs (p)(2) through (5) of this section; perform calculations specified in paragraphs (p)(6) through (9) of this section; and calculate $CH_4$ and $CO_2$ mass emissions as specified in paragraph (p)(11) of this section. If emissions from a compressor source are routed to a flare, paragraphs (p)(1) through (11) do not apply and instead you must calculate $CH_4$, $CO_2$, and $N_2O$ emissions as specified in paragraph (p)(12) of this section. If emissions from a compressor source are captured for fuel use or are routed to a thermal oxidizer, paragraphs (p)(1) through (12) do not apply and instead you must calculate and report emissions as specified in subpart C of this part. If emissions from a compressor source are routed to vapor recovery, paragraphs (p)(1) through (12) do not apply. If you are required to report emissions from reciprocating compressor venting at an onshore petroleum and natural gas production facility as specified in § 98.232(c)(11) or an onshore petroleum and natural gas gathering and boosting facility as specified in § 98.232(j)(5), you must calculate volumetric emissions as specified in paragraph (p)(10); and calculate $CH_4$ and $CO_2$ mass emissions as specified in paragraph (p)(11).

* * * * *

(10) *Method for calculating volumetric GHG emissions from reciprocating compressor venting at an onshore petroleum and natural gas production facility or an onshore petroleum and natural gas gathering and boosting facility.* You must calculate emissions from reciprocating compressor venting at an onshore petroleum and natural gas production facility or an onshore petroleum and natural gas gathering and boosting facility using Equation W–29D of this section.

$$E_{s,i} = Count * EF_{i,s} \qquad \text{(Eq. W-29D)}$$

Where:

$E_{s,i}$ = Annual volumetric $GHG_i$ (either $CH_4$ or $CO_2$) emissions from reciprocating compressors, at standard conditions, in cubic feet.

Count = Total number of reciprocating compressors.

$EF_{i,s}$ = Emission factor for $GHG_i$. Use $9.48 \times 10^3$ standard cubic feet per year per compressor for $CH_4$ and $5.27 \times 10^2$ standard cubic feet per year per compressor for $CO_2$ at 60 °F and 14.7 psia.

* * * * *

(r) *Equipment leaks by population count.* This paragraph (r) applies to emissions sources listed in § 98.232 (c)(21), (f)(5), (g)(3), (h)(4), (i)(2), (i)(3), (i)(4), (i)(5), (i)(6), (j)(10), and (j)(11) on streams with gas content greater than 10 percent $CH_4$ plus $CO_2$ by weight. Emissions sources in streams with gas content less than or equal to 10 percent $CH_4$ plus $CO_2$ by weight are exempt from the requirements of this paragraph (r) and do not need to be reported. Tubing systems equal to or less than one half inch diameter are exempt from the requirements of paragraph (r) of this section and do not need to be reported. You must calculate emissions from all emission sources listed in this paragraph using Equation W–32A of this section, except for natural gas distribution facility emission sources listed in § 98.232(i)(3). Natural gas distribution facility emission sources listed in § 98.232(i)(3) must calculate emissions using Equation W–32B of this section and according to paragraph (r)(6)(ii) of this section.

$$E_{s,e,i} = Count_e * EF_{s,e} * GHG_i * T_e \qquad \text{(Eq. W-32A)}$$

$$E_{s,MR,i} = Count_{MR} * EF_{s,MR,i} * T_{w,avg} \qquad \text{(Eq. W-32B)}$$

Where:

$E_{s,e,i}$ = Annual volumetric emissions of $GHG_i$ from the emission source type in standard cubic feet. The emission source type may be a component (*e.g.* connector, open-ended line, etc.), below grade metering-regulating station, below grade transmission-distribution transfer station, distribution main, distribution service, or gathering pipeline.

$E_{s,MR,i}$ = Annual volumetric emissions of $GHG_i$ from all meter/regulator runs at above grade metering regulating stations that are not above grade transmission-distribution transfer stations or, when used to calculate emissions according to paragraph (q)(9) of this section, the annual volumetric emissions of $GHG_i$ from all meter/regulator runs at above grade transmission-distribution transfer stations, in standard cubic feet.

$Count_e$ = Total number of the emission source type at the facility. For onshore petroleum and natural gas production facilities and onshore petroleum and natural gas gathering and boosting facilities, average component counts are provided by major equipment piece in Tables W–1B and Table W–1C of this subpart. Use average component counts as appropriate for operations in Eastern and Western U.S., according to Table W–1D of this subpart. Onshore petroleum and natural gas gathering and boosting facilities must also count the miles of gathering pipelines by material type (protected steel, unprotected steel, plastic, or cast iron). Underground natural gas storage facilities must count each component listed in Table W–4 of this subpart. LNG storage facilities must count the number of vapor recovery compressors. LNG import and export facilities must count the number of vapor recovery compressors. Natural gas distribution facilities must count: (1) The number of distribution services by material type; (2) miles of distribution mains by material type; and (3) number of below grade metering-regulating stations, by pressure type; as listed in Table W–7 of this subpart.

$Count_{MR}$ = Total number of meter/regulator runs at above grade metering-regulating stations that are not above grade transmission-distribution transfer stations or, when used to calculate emissions according to paragraph (q)(9) of this section, the total number of meter/regulator runs at above grade transmission-distribution transfer stations.

$EF_{s,e}$ = Population emission factor for the specific emission source type, as listed in Tables W–1A and W–4 through W–7 of this subpart. Use appropriate population emission factor for operations in Eastern and Western U.S., according to Table W–1D of this subpart.

$EF_{s,MR,i}$ = Meter/regulator run population emission factor for $GHG_i$ based on all surveyed above grade transmission-distribution transfer stations over ''n'' years, in standard cubic feet of $GHG_i$ per operational hour of all meter/regulator runs, as determined in Equation W–31 of this section.

$GHG_i$ = For onshore petroleum and natural gas production facilities and onshore petroleum and natural gas gathering and boosting facilities, concentration of $GHG_i$, $CH_4$, or $CO_2$, in produced natural gas as defined in paragraph (u)(2) of this section; for onshore natural gas transmission compression and underground natural gas storage, $GHG_i$ equals 0.975 for $CH_4$ and $1.1 \times 10^{-2}$ for $CO_2$; for LNG storage and LNG import and export equipment, $GHG_i$ equals 1 for $CH_4$ and 0 for $CO_2$; and for natural gas distribution, $GHG_i$ equals 1 for $CH_4$ and $1.1 \times 10^{-2}$ $CO_2$.

$T_e$ = Average estimated time that each emission source type associated with the equipment leak emission was operational in the calendar year, in hours, using engineering estimate based on best available data.

$T_{w,avg}$ = Average estimated time that each meter/regulator run was operational in the calendar year, in hours per meter/regulator run, using engineering estimate based on best available data.

* * * * *

(2) Onshore petroleum and natural gas production facilities and onshore petroleum and natural gas gathering and boosting facilities must use the appropriate default whole gas population emission factors listed in Table W–1A of this subpart. Major equipment and components associated with gas wells and onshore petroleum and natural gas gathering and boosting systems are considered gas service components in reference to Table W–1A of this subpart and major natural gas equipment in reference to Table W–1B of this subpart. Major equipment and components associated with crude oil wells are considered crude service components in reference to Table W–1A of this subpart and major crude oil equipment in reference to Table W–1C of this subpart. Where facilities conduct EOR operations the emissions factor listed in Table W–1A of this subpart shall be used to estimate all streams of gases, including recycle $CO_2$ stream. The component count can be determined using either of the calculation methods described in this paragraph (r)(2), except for miles of gathering pipelines by material type, which must be determined using Component Count Method 2 in paragraph (r)(2)(ii) of this section. The same calculation method must be used for the entire calendar year.

(i) *Component Count Method 1.* For all onshore petroleum and natural gas production operations and onshore petroleum and natural gas gathering and boosting operations in the facility perform the following activities:

(A) Count all major equipment listed in Table W–1B and Table W–1C of this subpart. For meters/piping, use one meters/piping per well-pad for onshore petroleum and natural gas production operations and the number of meters in the facility for onshore petroleum and natural gas gathering and boosting operations.

(B) Multiply major equipment counts by the average component counts listed in Table W–1B of this subpart for onshore natural gas production and onshore petroleum and natural gas gathering and boosting; and Table W–1C of this subpart for onshore oil production. Use the appropriate factor

in Table W–1A of this subpart for operations in Eastern and Western U.S. according to the mapping in Table W–1D of this subpart.

* * * * *

(u) * * *

(2) * * *

(i) *GHG mole fraction in produced natural gas for onshore petroleum and natural gas production facilities and onshore petroleum and natural gas gathering and boosting facilities.* If you have a continuous gas composition analyzer for produced natural gas, you must use an annual average of these values for determining the mole fraction. If you do not have a continuous gas composition analyzer, then you must use an annual average gas composition based on your most recent available analysis of the sub-basin category or facility, as applicable to the emission source.

* * * * *

(iii) *GHG mole fraction in transmission pipeline natural gas that passes through the facility for the onshore natural gas transmission compression industry segment and the onshore natural gas transmission pipeline industry segment.* You may use either a default 95 percent methane and 1 percent carbon dioxide fraction for GHG mole fraction in natural gas or site specific engineering estimates based on best available data.

* * * * *

(z) *Onshore petroleum and natural gas production, onshore petroleum and natural gas gathering and boosting, and natural gas distribution combustion emissions.* Calculate $CO_2$, $CH_4$, and $N_2O$ combustion-related emissions from stationary or portable equipment, except as specified in paragraphs (z)(3) and (4) of this section, as follows:

(1) * * *

(ii) Emissions from fuel combusted in stationary or portable equipment at onshore petroleum and natural gas production facilities, at onshore petroleum and natural gas gathering and boosting facilities, and at natural gas distribution facilities will be reported according to the requirements specified in § 98.236(z) and not according to the reporting requirements specified in subpart C of this part.

* * * * *

■ 6. Section 98.234 is amended by adding paragraph (g) to read as follows:

**§ 98.234 Monitoring and QA/QC requirements.**

* * * * *

(g) *Special reporting provisions for best available monitoring methods in reporting year 2016*—(1) *Best available monitoring methods.* From January 1, 2016, to December 31, 2016, you must use the calculation methodologies and equations in § 98.233 but you may use the best available monitoring method as described in paragraph (g)(2) of this section for any parameter specified in paragraphs (g)(3) through (6) of this section for which it is not reasonably feasible to acquire, install, and operate a required piece of monitoring equipment by January 1, 2016. Starting no later than January 1, 2017, you must discontinue using best available methods and begin following all applicable monitoring and QA/QC requirements of this part. For onshore petroleum and natural gas production, this paragraph (g)(1) only applies if emissions from well completions and workovers of oil wells with hydraulic fracturing cause your facility to exceed the reporting threshold in § 98.231(a)(1).

(2) Best available monitoring methods means any of the following methods:

(i) Monitoring methods currently used by the facility that do not meet the specifications of this subpart.

(ii) Supplier data.

(iii) Engineering calculations.

(iv) Other company records.

(3) *Best available monitoring methods for well-related measurement data for oil wells with hydraulic fracturing.* You may use best available monitoring methods for any well-related measurement data that cannot reasonably be measured according to the monitoring and QA/QC requirements of this subpart for venting during well completions and workovers of oil wells with hydraulic fracturing.

(4) *Best available monitoring methods for measurement data for onshore petroleum and natural gas gathering and boosting facilities.* You may use best available monitoring methods for any leak detection and/or measurement data that cannot reasonably be measured according to the monitoring and QA/QC requirements of this subpart for acid gas removal vents as specified in § 98.233(d).

(5) *Best available monitoring methods for measurement data for natural gas transmission pipelines.* You may use best available monitoring methods for any measurement data for natural gas transmission pipelines that cannot reasonably be obtained according to the monitoring and QA/QC requirements of this subpart for blowdown vent stacks.

(6) *Best available monitoring methods for specified activity data.* You may use best available monitoring methods for activity data as listed in paragraphs (g)(6)(i) through (iii) of this section that cannot reasonably be obtained according to the monitoring and QA/QC requirements of this subpart for well completions and workovers of oil wells with hydraulic fracturing, onshore petroleum and natural gas gathering and boosting facilities, or natural gas transmission pipelines.

(i) Cumulative hours of venting, days, or times of operation in § 98.233(e), (g), (o), (p), and (r).

(ii) Number of blowdowns, completions, workovers, or other events in § 98.233(g) and (i).

(iii) Cumulative volume produced, volume input or output, or volume of fuel used in paragraphs § 98.233(d), (e), (j), (n), and (z).

* * * * *

■ 7. Section 98.236 is amended by:

■ a. Revising paragraph (a) introductory text;

■ b. Adding paragraphs (a)(9) and (10);

■ c. Revising paragraphs (d)(1)(i) and (vi);

■ d. Revising paragraphs (e)(1)(i) and (xviii);

■ e. Revising paragraphs (f)(1)(ii), (f)(1)(xi)(A), (f)(1)(xii)(A), and (f)(2)(i);

■ f. Revising paragraphs (g) introductory text, (g)(1), (g)(2), (g)(5), and (g)(6);

■ g. Revising paragraphs (h)(1)(i) and (iv), (h)(2)(i) and (iv), (h)(3)(i), and (h)(4)(i);

■ h. Revising paragraphs (i) introductory text and (i)(1) introductory text;

■ i. Adding paragraph (i)(3);

■ j. Revising paragraphs (j) introductory text and (j)(1) introductory text;

■ k. Revising paragraphs (j)(1)(i), (iii), (iv) (v), (vii), and (viii);

■ l. Revising paragraphs (j)(2)(i) introductory text, (j)(2)(i)(A) through (C), (j)(2)(ii), (j)(2)(iii) introductory text, (j)(2)(iii)(A) and (B), and (j)(3) introductory text;

■ m. Revising paragraph (l)(1) introductory text;

■ n. Redesignating paragraphs (l)(1)(ii) through (vi) as paragraphs (l)(1)(iii) through (vii), respectively;

■ o. Adding paragraph (l)(1)(ii);

■ p. Revising newly designated paragraph (l)(1)(v);

■ q. Revising paragraph (l)(2) introductory text;

■ r. Redesignating paragraphs (l)(2)(ii) through (vii) as paragraphs (l)(2)(iii) through (viii), respectively;

■ s. Adding paragraph (l)(2)(ii);

■ t. Revising newly designated paragraph (l)(2)(v);

■ u. Revising paragraph (l)(3) introductory text;

■ v. Redesignating paragraphs (l)(3)(ii) through (v) as paragraphs (l)(3)(iii) through (vi), respectively;

■ w. Adding paragraph (l)(3)(ii);

■ x. Revising newly designated paragraph (l)(3)(iv);

■ y. Revising paragraph (l)(4) introductory text;
■ a. Redesignating paragraphs (l)(4)(ii) through (vi) as paragraphs (l)(4)(iii) through (vii), respectively;
■ aa. Adding paragraph (l)(4)(ii);
■ bb. Revising newly designated paragraph (l)(4)(iv);
■ cc. Revising paragraphs (m)(1), (m)(5), (m)(6), (m)(7)(i), (m)(8)(i);
■ dd. Revising paragraph (n)(1);
■ ee. Revising paragraphs (o) introductory text and (o)(5) introductory text;
■ ff. Revising paragraphs (p) introductory text and (p)(5) introductory text;
■ gg. Revising paragraphs (r)(1) introductory text, (r)(1)(i), (r)(3) introductory text, and (r)(3)(ii) introductory text;
■ hh. Revising paragraph (z) introductory text;
■ ii. Revising paragraphs (aa) introductory text and (aa)(1)(ii)(D) through (H);
■ jj. Adding paragraphs (aa)(10) and (11); and
■ kk. Revising paragraph (cc).

The revisions and additions read as follows:

**§ 98.236 Data reporting requirements.**

* * * * *

(a) The annual report must include the information specified in paragraphs (a)(1) through (10) of this section for each applicable industry segment. The annual report must also include annual emissions totals, in metric tons of each GHG, for each applicable industry segment listed in paragraphs (a)(1) through (10), and each applicable emission source listed in paragraphs (b) through (z) of this section.

* * * * *

(9) *Onshore petroleum and natural gas gathering and boosting.* For the equipment/activities specified in paragraphs (a)(9)(i) through (xi) of this section, report the information specified in the applicable paragraphs of this section.

(i) *Natural gas pneumatic devices.* Report the information specified in paragraph (b) of this section.

(ii) *Natural gas driven pneumatic pumps.* Report the information specified in paragraph (c) of this section.

(iii) *Acid gas removal units.* Report the information specified in paragraph (d) of this section.

(iv) *Dehydrators.* Report the information specified in paragraph (e) of this section.

(v) *Blowdown vent stacks.* Report the information specified in paragraph (i) of this section.

(vi) *Storage tanks.* Report the information specified in paragraph (j) of this section.

(vii) *Flare stacks.* Report the information specified in paragraph (n) of this section.

(viii) *Centrifugal compressors.* Report the information specified in paragraph (o) of this section.

(ix) *Reciprocating compressors.* Report the information specified in paragraph (p) of this section.

(x) *Equipment leaks by population count.* Report the information specified in paragraph (r) of this section.

(xi) *Combustion equipment.* Report the information specified in paragraph (z) of this section.

(10) *Onshore natural gas transmission pipeline.* For blowdown vent stacks, report the information specified in paragraph (i) of this section.

* * * * *

(d) * * *

(1) * * *

(i) A unique name or ID number for the acid gas removal unit. For the onshore petroleum and natural gas production and the onshore petroleum and natural gas gathering and boosting industry segments, a different name or ID may be used for a single acid gas removal unit for each location it operates at in a given year.

* * * * *

(vi) Sub-basin ID that best represents the wells supplying gas to the unit (for the onshore petroleum and natural gas production industry segment only) or name of the county that best represents the equipment supplying gas to the unit (for the onshore petroleum and natural gas gathering and boosting industry segment only).

* * * * *

(e) * * *

(1) * * *

(i) A unique name or ID number for the dehydrator. For the onshore petroleum and natural gas production and the onshore petroleum and natural gas gathering and boosting industry segments, a different name or ID may be used for a single dehydrator for each location it operates at in a given year.

* * * * *

(xviii) Sub-basin ID that best represents the wells supplying gas to the dehydrator (for the onshore petroleum and natural gas production industry segment only) or name of the county that best represents the equipment supplying gas to the dehydrator (for the onshore petroleum and natural gas gathering and boosting industry segment only).

* * * * *

(f) * * *

(1) * * *

(ii) Well tubing diameter and pressure group ID and a list of the well ID numbers associated with each sub-basin and well tubing diameter and pressure group ID.

* * * * *

(xi) * * *

(A) Well ID number of tested well.

* * * * *

(xii) * * *

(A) Well ID number.

* * * * *

(2) * * *

(i) Sub-basin ID and a list of the well ID numbers associated with each sub-basin.

* * * * *

(g) *Completions and workovers with hydraulic fracturing.* You must indicate whether your facility had any well completions or workovers with hydraulic fracturing during the calendar year. If your facility had well completions or workovers with hydraulic fracturing during the calendar year, then you must report information specified in paragraphs (g)(1) through (10) of this section, for each sub-basin and well type combination. Report information separately for completions and workovers.

(1) Sub-basin ID and a list of the well ID numbers associated with each sub-basin that had completions or workovers with hydraulic fracturing during the calendar year.

(2) Well type combination (horizontal or vertical, gas well or oil well).

* * * * *

(5) If you used Equation W–10A of § 98.233 to calculate annual volumetric total gas emissions, then you must report the information specified in paragraphs (g)(5)(i) through (iii) of this section.

(i) Cumulative gas flowback time, in hours, from when gas is first detected until sufficient quantities are present to enable separation, and the cumulative flowback time, in hours, after sufficient quantities of gas are present to enable separation (sum of ''$T_{p,i}$'' and sum of ''$T_{p,s}$'' values used in Equation W–10A of § 98.233). You may delay the reporting of this data element if you indicate in the annual report that wildcat wells and/or delineation wells are the only wells included in this number. If you elect to delay reporting of this data element, you must report by the date specified in § 98.236(cc) the total number of hours of flowback from all wells during completions or workovers and the well ID number(s) for the well(s) included in the number.

(ii) For the measured well(s), the flowback rate, in standard cubic feet per

hour (average of ''$FR_{s,p}$'' values used in Equation W–12A of § 98.233), and the well ID numbers of the wells for which it is measured. You may delay the reporting of this data element if you indicate in the annual report that wildcat wells and/or delineation wells are the only wells that can be used for the measurement. If you elect to delay reporting of this data element, you must report by the date specified in § 98.236(cc) the measured flowback rate during well completion or workover and the well ID number(s) for the well(s) included in the measurement.

(iii) If you used Equation W–12C of § 98.233 to calculate the average gas production rate for an oil well, then you must report the information specified in paragraphs (g)(5)(iii)(A) and (B) of this section.

(A) Gas to oil ratio for the well in standard cubic feet of gas per barrel of oil (''$GOR_p$'' in Equation W–12C of § 98.233). You may delay the reporting of this data element if you indicate in the annual report that wildcat wells and/or delineation wells are the only wells that can be used for the measurement. If you elect to delay reporting of this data element, you must report by the date specified in § 98.236(cc) the gas to oil ratio for the well and the well ID number for the well.

(B) Volume of oil produced during the first 30 days of production after completions of each newly drilled well or well workover using hydraulic fracturing, in barrels (''$V_p$'' in Equation W–12C of § 98.233). You may delay the reporting of this data element if you indicate in the annual report that wildcat wells and/or delineation wells are the only wells that can be used for the measurement. If you elect to delay reporting of this data element, you must report by the date specified in § 98.236(cc) the volume of oil produced during the first 30 days of production after well completion or workover and the well ID number for the well.

(6) If you used Equation W–10B of § 98.233 to calculate annual volumetric total gas emissions, then you must report the information specified in paragraphs (g)(6)(i) through (iii) of this section.

(i) Vented natural gas volume, in standard cubic feet, for each well in the sub-basin (''$FV_{s,p}$'' in Equation W–10B of § 98.233).

(ii) Flow rate at the beginning of the period of time when sufficient quantities of gas are present to enable separation, in standard cubic feet per hour, for each well in the sub-basin (''$FR_{p,i}$'' in Equation W–10B of § 98.233).

(iii) The well ID number for which vented natural gas volume was measured.

* * * * *

(h) * * *

(1) * * *

(i) Sub-basin ID and a list of the well ID numbers associated with each sub-basin for gas well completions without hydraulic fracturing and without flaring.

* * * * *

(iv) Average daily gas production rate for all completions without hydraulic fracturing in the sub-basin without flaring, in standard cubic feet per hour (average of all ''$V_p$'' used in Equation W–13B of § 98.233). You may delay reporting of this data element if you indicate in the annual report that wildcat wells and/or delineation wells are the only wells that can be used for the measurement. If you elect to delay reporting of this data element, you must report by the date specified in § 98.236(cc) the measured average daily gas production rate for all wells during completions and the well ID number(s) for the well(s) included in the measurement.

* * * * *

(2) * * *

(i) Sub-basin ID and a list of the well ID numbers associated with each sub-basin for gas well completions without hydraulic fracturing and with flaring.

* * * * *

(iv) Average daily gas production rate for all completions without hydraulic fracturing in the sub-basin with flaring, in standard cubic feet per hour (the average of all ''$V_p$'' from Equation W–13B of § 98.233). You may delay reporting of this data element if you indicate in the annual report that wildcat wells and/or delineation wells are the only wells that can be used for the measurement. If you elect to delay reporting of this data element, you must report by the date specified in § 98.236(cc) the measured average daily gas production rate for all wells during completions and the well ID number(s) for the well(s) included in the measurement.

* * * * *

(3) * * *

(i) Sub-basin ID and a list of the well ID numbers associated with each sub-basin for gas well workovers without hydraulic fracturing and without flaring.

* * * * *

(4) * * *

(i) Sub-basin ID and a list of well ID numbers associated with each sub-basin for gas well workovers without hydraulic fracturing and with flaring.

* * * * *

(i) *Blowdown vent stacks.* You must indicate whether your facility has blowdown vent stacks. If your facility has blowdown vent stacks, then you must report whether emissions were calculated by equipment or event type or by using flow meters or a combination of both. If you calculated emissions by equipment or event type for any blowdown vent stacks, then you must report the information specified in paragraph (i)(1) of this section considering, in aggregate, all blowdown vent stacks for which emissions were calculated by equipment or event type. If you calculated emissions using flow meters for any blowdown vent stacks, then you must report the information specified in paragraph (i)(2) of this section considering, in aggregate, all blowdown vent stacks for which emissions were calculated using flow meters. For the onshore natural gas transmission pipeline segment, you must also report the information in paragraph (i)(3) of this section.

(1) *Report by equipment or event type.* If you calculated emissions from blowdown vent stacks by the seven categories listed in § 98.233(i)(2) for industry segments other than the onshore natural gas transmission pipeline segment, then you must report the equipment or event types and the information specified in paragraphs (i)(1)(i) through (iii) of this section for each equipment or event type. If a blowdown event resulted in emissions from multiple equipment types, and the emissions cannot be apportioned to the different equipment types, then you may report the information in paragraphs (i)(1)(i) through (iii) of this section for the equipment type that represented the largest portion of the emissions for the blowdown event. If you calculated emissions from blowdown vent stacks by the eight categories listed in § 98.233(i)(2) for the onshore natural gas transmission pipeline segment, then you must report the pipeline segments or event types and the information specified in paragraphs (i)(1)(i) through (iii) of this section for each ''equipment or event type'' (*i.e.,* category). If a blowdown event resulted in emissions from multiple categories, and the emissions cannot be apportioned to the different categories, then you may report the information in paragraphs (i)(1)(i) through (iii) of this section for the ''equipment or event type'' (*i.e.,* category) that represented the largest portion of the emissions for the blowdown event.

* * * * *

(3) *Onshore natural gas transmission pipeline segment.* Report the information in paragraphs (i)(3)(i) through (iii) of this section for each state.

(i) Annual $CO_2$ emissions in metric tons $CO_2$.

(ii) Annual $CH_4$ emissions in metric tons $CH_4$.

(iii) Annual number of blowdown events.

(j) *Onshore production and onshore petroleum and natural gas gathering and boosting storage tanks.* You must indicate whether your facility sends produced oil to atmospheric tanks. If your facility sends produced oil to atmospheric tanks, then you must indicate which Calculation Method(s) you used to calculate GHG emissions, and you must report the information specified in paragraphs (j)(1) and (2) of this section as applicable. If you used Calculation Method 1 or Calculation Method 2 of § 98.233(j), and any atmospheric tanks were observed to have malfunctioning dump valves during the calendar year, then you must indicate that dump valves were malfunctioning and you must report the information specified in paragraph (j)(3) of this section.

(1) If you used Calculation Method 1 or Calculation Method 2 of § 98.233(j) to calculate GHG emissions, then you must report the information specified in paragraphs (j)(1)(i) through (xvi) of this section for each sub-basin (for onshore production) or county (for onshore petroleum and natural gas gathering and boosting) and by calculation method. Onshore petroleum and natural gas gathering and boosting facilities do not report the information specified in paragraphs (j)(1)(ix) and (xi) of this section.

(i) Sub-basin ID (for onshore production) or county name (for onshore petroleum and natural gas gathering and boosting).

* * * * *

(iii) The total annual oil volume from gas-liquid separators and direct from wells or non-separator equipment that is sent to applicable onshore production and onshore petroleum and natural gas gathering and boosting storage tanks, in barrels. You may delay reporting of this data element for onshore production if you indicate in the annual report that wildcat wells and delineation wells are the only wells in the sub-basin with oil production greater than or equal to 10 barrels per day and flowing to gas-liquid separators or direct to storage tanks. If you elect to delay reporting of this data element, you must report by the date specified in § 98.236(cc) the total volume of oil from all wells and the well ID number(s) for the well(s) included in this volume.

(iv) The average gas-liquid separator or non-separator equipment temperature, in degrees Fahrenheit.

(v) The average gas-liquid separator or non-separator equipment pressure, in pounds per square inch gauge.

* * * * *

(vii) The minimum and maximum concentration (mole fraction) of $CO_2$ in flash gas from onshore production and onshore natural gas gathering and boosting storage tanks.

(viii) The minimum and maximum concentration (mole fraction) of $CH_4$ in flash gas from onshore production and onshore natural gas gathering and boosting storage tanks.

* * * * *

(2) * * *

(i) Report the information specified in paragraphs (j)(2)(i)(A) through (F) of this section, at the basin level, for atmospheric tanks where emissions were calculated using Calculation Method 3 of § 98.233(j). Onshore gathering and boosting facilities do not report the information specified in paragraphs (j)(2)(i)(E) and (F) of this section.

(A) The total annual oil/condensate throughput that is sent to all atmospheric tanks in the basin, in barrels. You may delay reporting of this data element for onshore production if you indicate in the annual report that wildcat wells and delineation wells are the only wells in the sub-basin with oil/condensate production less than 10 barrels per day and that send oil/condensate to atmospheric tanks. If you elect to delay reporting of this data element, you must report by the date specified in § 98.236(cc) the total annual oil/condensate throughput from all wells and the well ID number(s) for the well(s) included in this volume.

(B) An estimate of the fraction of oil/condensate throughput reported in paragraph (j)(2)(i)(A) of this section sent to atmospheric tanks in the basin that controlled emissions with flares.

(C) An estimate of the fraction of oil/condensate throughput reported in paragraph (j)(2)(i)(A) of this section sent to atmospheric tanks in the basin that controlled emissions with vapor recovery systems.

* * * * *

(ii) Report the information specified in paragraphs (j)(2)(ii)(A) through (D) of this section for each sub-basin (for onshore production) or county (for onshore petroleum and natural gas gathering and boosting) with atmospheric tanks whose emissions were calculated using Calculation Method 3 of § 98.233(j) and that did not control emissions with flares.

(A) Sub-basin ID (for onshore production) or county name (for onshore petroleum and natural gas gathering and boosting).

(B) The number of atmospheric tanks in the sub-basin (for onshore production) or county (for onshore petroleum and natural gas gathering and boosting) that did not control emissions with flares.

(C) Annual $CO_2$ emissions, in metric tons $CO_2$, from atmospheric tanks in the sub-basin (for onshore production) or county (for onshore petroleum and natural gas gathering and boosting) that did not control emissions with flares, calculated using Equation W–15 of § 98.233(j) and adjusted for vapor recovery, if applicable.

(D) Annual $CH_4$ emissions, in metric tons $CH_4$, from atmospheric tanks in the sub-basin (for onshore production) or county (for onshore petroleum and natural gas gathering and boosting) that did not control emissions with flares, calculated using Equation W–15 of § 98.233(j) and adjusted for vapor recovery, if applicable.

(iii) Report the information specified in paragraphs (j)(2)(iii)(A) through (E) of this section for each sub-basin (for onshore production) or county (for onshore petroleum and natural gas gathering and boosting) with atmospheric tanks whose emissions were calculated using Calculation Method 3 of § 98.233(j) and that controlled emissions with flares.

(A) Sub-basin ID (for onshore production) or county name (for onshore petroleum and natural gas gathering and boosting).

(B) The number of atmospheric tanks in the sub-basin (for onshore production) or county (for onshore petroleum and natural gas gathering and boosting) that controlled emissions with flares.

* * * * *

(3) If you used Calculation Method 1 or Calculation Method 2 of § 98.233(j), and any gas-liquid separator liquid dump values did not close properly during the calendar year, then you must report the information specified in paragraphs (j)(3)(i) through (iv) of this section for each sub-basin (for onshore production) or county (for onshore petroleum and natural gas gathering and boosting).

* * * * *

(l) * * *

(1) If you used Equation W–17A of § 98.233 to calculate annual volumetric natural gas emissions at actual

conditions from oil wells and the emissions are not vented to a flare, then you must report the information specified in paragraphs (l)(1)(i) through (vii) of this section.

* * * * *

(ii) Well ID numbers for the wells tested in the calendar year.

* * * * *

(v) Average flow rate for well(s) tested, in barrels of oil per day. You may delay reporting of this data element if you indicate in the annual report that wildcat wells and/or delineation wells are the only wells that are tested. If you elect to delay reporting of this data element, you must report by the date specified in § 98.236(cc) the measured average flow rate for well(s) tested and the well ID number(s) for the well(s) included in the measurement.

* * * * *

(2) If you used Equation W–17A of § 98.233 to calculate annual volumetric natural gas emissions at actual conditions from oil wells and the emissions are vented to a flare, then you must report the information specified in paragraphs (l)(2)(i) through (viii) of this section.

* * * * *

(ii) Well ID numbers for the wells tested in the calendar year.

* * * * *

(v) Average flow rate for well(s) tested, in barrels of oil per day. You may delay reporting of this data element if you indicate in the annual report that wildcat wells and/or delineation wells are the only wells that are tested. If you elect to delay reporting of this data element, you must report by the date specified in § 98.236(cc) the measured average flow rate for well(s) tested and the well ID number(s) for the well(s) included in the measurement.

* * * * *

(3) If you used Equation W–17B of § 98.233 to calculate annual volumetric natural gas emissions at actual conditions from gas wells and the emissions were not vented to a flare, then you must report the information specified in paragraphs (l)(3)(i) through (vi) of this section.

* * * * *

(ii) Well ID numbers for the wells tested in the calendar year.

* * * * *

(iv) Average annual production rate for well(s) tested, in actual cubic feet per day. You may delay reporting of this data element if you indicate in the annual report that wildcat wells and/or delineation wells are the only wells that are tested. If you elect to delay reporting of this data element, you must report by the date specified in § 98.236(cc) the measured average annual production rate for well(s) tested and the well ID number(s) for the well(s) included in the measurement.

* * * * *

(4) If you used Equation W–17B of § 98.233 to calculate annual volumetric natural gas emissions at actual conditions from gas wells and the emissions were vented to a flare, then you must report the information specified in paragraphs (l)(4)(i) through (vii) of this section.

* * * * *

(ii) Well ID numbers for the wells tested in the calendar year.

* * * * *

(iv) Average annual production rate for well(s) tested, in actual cubic feet per day. You may delay reporting of this data element if you indicate in the annual report that wildcat wells and/or delineation wells are the only wells that are tested. If you elect to delay reporting of this data element, you must report by the date specified in § 98.236(cc) the measured average annual production rate for well(s) tested and the well ID number(s) for the well(s) included in the measurement.

* * * * *

(m) * * *

(1) Sub-basin ID and a list of well ID numbers for wells for which associated gas was vented or flared.

* * * * *

(5) Volume of oil produced, in barrels, in the calendar year during the time periods in which associated gas was vented or flared (the sum of ''$V_{p,q}$'' used in Equation W–18 of § 98.233). You may delay reporting of this data element if you indicate in the annual report that wildcat wells and/or delineation wells are the only wells from which associated gas was vented or flared. If you elect to delay reporting of this data element, you must report by the date specified in § 98.236(cc) the volume of oil produced for well(s) with associated gas venting and flaring and the well ID number(s) for the well(s) included in the measurement.

(6) Total volume of associated gas sent to sales, in standard cubic feet, in the calendar year during time periods in which associated gas was vented or flared (the sum of ''SG'' values used in Equation W–18 of § 98.233(m)). You may delay reporting of this data element if you indicate in the annual report that wildcat wells and/or delineation wells from which associated gas was vented or flared. If you elect to delay reporting of this data element, you must report by the date specified in § 98.236(cc) the measured total volume of associated gas sent to sales for well(s) with associated gas venting and flaring and the well ID number(s) for the well(s) included in the measurement.

(7) * * *

(i) Total number of wells for which associated gas was vented directly to the atmosphere without flaring and a list of their well ID numbers.

* * * * *

(8) * * *

(i) Total number of wells for which associated gas was flared and a list of their well ID numbers.

* * * * *

(n) * * *

(1) Unique name or ID for the flare stack. For the onshore petroleum and natural gas production and onshore petroleum and natural gas gathering and boosting industry segments, a different name or ID may be used for a single flare stack for each location where it operates at in a given calendar year.

* * * * *

(o) *Centrifugal compressors.* You must indicate whether your facility has centrifugal compressors. You must report the information specified in paragraphs (o)(1) and (2) of this section for all centrifugal compressors at your facility. For each compressor source or manifolded group of compressor sources that you conduct as found leak measurements as specified in § 98.233(o)(2) or (4), you must report the information specified in paragraph (o)(3) of this section. For each compressor source or manifolded group of compressor sources that you conduct continuous monitoring as specified in § 98.233(o)(3) or (5), you must report the information specified in paragraph (o)(4) of this section. Centrifugal compressors in onshore petroleum and natural gas production and onshore petroleum and natural gas gathering and boosting are not required to report information in paragraphs (o)(1) through (4) of this section and instead must report the information specified in paragraph (o)(5) of this section.

* * * * *

(5) *Onshore petroleum and natural gas production and onshore petroleum and natural gas gathering and boosting.* Centrifugal compressors with wet seal degassing vents in onshore petroleum and natural gas production and onshore petroleum and natural gas gathering and boosting must report the information specified in paragraphs (o)(5)(i) through (iii) of this section.

* * * * *

(p) *Reciprocating compressors.* You must indicate whether your facility has reciprocating compressors. You must report the information specified in

paragraphs (p)(1) and (2) of this section for all reciprocating compressors at your facility. For each compressor source or manifolded group of compressor sources that you conduct as found leak measurements as specified in § 98.233(p)(2) or (4), you must report the information specified in paragraph (p)(3) of this section. For each compressor source or manifolded group of compressor sources that you conduct continuous monitoring as specified in § 98.233(p)(3) or (5), you must report the information specified in paragraph (p)(4) of this section. Reciprocating compressors in onshore petroleum and natural gas production and onshore petroleum and natural gas gathering and boosting are not required to report information in paragraphs (p)(1) through (4) of this section and instead must report the information specified in paragraph (p)(5) of this section.

* * * * *

(5) *Onshore petroleum and natural gas production and onshore petroleum and natural gas gathering and boosting.* Reciprocating compressors in onshore petroleum and natural gas production and onshore petroleum and natural gas gathering and boosting must report the information specified in paragraphs (p)(5)(i) through (iii) of this section.

* * * * *

(r) * * *

(1) You must indicate whether your facility contains any of the emission source types required to use Equation W–32A of § 98.233. You must report the information specified in paragraphs (r)(1)(i) through (v) of this section separately for each emission source type required to use Equation W–32A that is located at your facility. Onshore petroleum and natural gas production facilities and onshore petroleum and natural gas gathering and boosting facilities must report the information specified in paragraphs (r)(1)(i) through (v) separately by component type, service type, and geographic location (*i.e.,* Eastern U.S. or Western U.S.).

(i) Emission source type. Onshore petroleum and natural gas production facilities and onshore petroleum and natural gas gathering and boosting facilities must report the component type, service type and geographic location.

* * * * *

(3) Onshore petroleum and natural gas production facilities and onshore petroleum and natural gas gathering and boosting facilities must also report the information specified in paragraphs (r)(3)(i) and (ii) of this section.

* * * * *

(ii) Onshore petroleum and natural gas production facilities and onshore petroleum and natural gas gathering and boosting facilities must report the information specified in paragraphs (r)(3)(ii)(A) and (B) of this section, for each major equipment type, production type (*i.e.,* natural gas or crude oil), and geographic location combination in Tables W–1B and W–1C of this subpart.

* * * * *

(z) *Combustion equipment at onshore petroleum and natural gas production facilities, onshore petroleum and natural gas gathering and boosting facilities, and natural gas distribution facilities.* If your facility is required by § 98.232(c)(22), (i)(7), or (j)(12) to report emissions from combustion equipment, then you must indicate whether your facility has any combustion units subject to reporting according to paragraph (a)(1)(xvii), (a)(8)(i), or (a)(9)(xi) of this section. If your facility contains any combustion units subject to reporting according to paragraph (a)(1)(xvii), (a)(8)(i), or (a)(9)(xi) of this section, then you must report the information specified in paragraphs (z)(1) and (2) of this section, as applicable.

* * * * *

(aa) Each facility must report the information specified in paragraphs (aa)(1) through (11) of this section, for each applicable industry segment, by using best available data. If a quantity required to be reported is zero, you must report zero as the value.

(1) * * *

(ii) * * *

(D) The number of producing wells at the end of the calendar year and a list of the well ID numbers (exclude only those wells permanently taken out of production, *i.e.,* plugged and abandoned).

(E) The number of producing wells acquired during the calendar year and a list of the well ID numbers.

(F) The number of producing wells divested during the calendar year and a list of the well ID numbers.

(G) The number of wells completed during the calendar year and a list of the well ID numbers.

(H) The number of wells permanently taken out of production (*i.e.,* plugged and abandoned) during the calendar year and a list of the well ID numbers.

* * * * *

(10) For onshore petroleum and natural gas gathering and boosting facilities, report the quantities specified in paragraphs (aa)(10)(i) through (iv) of this section.

(i) The quantity of gas received by the gathering and boosting facility in the calendar year, in thousand standard cubic feet.

(ii) The quantity of gas transported to a natural gas processing facility, a natural gas transmission pipeline, a natural gas distribution pipeline, or another gathering and boosting facility in the calendar year, in thousand standard cubic feet.

(iii) The quantity of all hydrocarbon liquids received by the gathering and boosting facility in the calendar year, in barrels.

(iv) The quantity of all hydrocarbon liquids transported to a natural gas processing facility, a natural gas transmission pipeline, a natural gas distribution pipeline, or another gathering and boosting facility in the calendar year, in barrels.

(11) For onshore natural gas transmission pipeline facilities, report the quantities specified in paragraphs (aa)(11)(i) through (vi) of this section.

(i) The quantity of natural gas received at all custody transfer stations in the calendar year, in thousand standard cubic feet. This value may include meter corrections, but only for the calendar year covered by the annual report.

(ii) The quantity of natural gas withdrawn from in-system storage in the calendar year, in thousand standard cubic feet.

(iii) The quantity of natural gas added to in-system storage in the calendar year, in thousand standard cubic feet.

(iv) The quantity of natural gas transferred to third parties such as LDCs or other transmission pipelines, in thousand standard cubic feet.

(v) The quantity of natural gas consumed by the transmission pipeline facility for operational purposes, in thousand standard cubic feet.

(vi) The miles of transmission pipeline for each state in the facility.

* * * * *

(cc) If you elect to delay reporting the information in paragraph (g)(5)(i), (g)(5)(ii), (g)(5)(iii)(A), (g)(5)(iii)(B), (h)(1)(iv), (h)(2)(iv), (j)(1)(iii), (j)(2)(i)(A), (l)(1)(iv), (l)(2)(iv), (l)(3)(iii), (l)(4)(iii), (m)(5), or (m)(6) of this section, you must report the information required in that paragraph no later than the date 2 years following the date specified in § 98.3(b) introductory text.

■ 8. Section 98.238 is amended by adding definitions for ''Facility with respect to onshore petroleum and natural gas gathering and boosting for purposes of reporting under this subpart and for the corresponding subpart A requirements,'' ''Facility with respect to the onshore natural gas transmission pipeline segment,'' ''Gathering and

boosting system,'' ''Gathering and boosting system owner or operator,'' ''Onshore natural gas transmission pipeline owner or operator,'' and ''Well identification (ID) number'' in alphabetical order to read as follows:

**§ 98.238 Definitions.**

* * * * *

*Facility with respect to onshore petroleum and natural gas gathering and boosting for purposes of reporting under this subpart and for the corresponding subpart A requirements* means all gathering pipelines and other equipment located along those pipelines that are under common ownership or common control by a gathering and boosting system owner or operator and that are located in a single hydrocarbon basin as defined in this section. Where a person owns or operates more than one gathering and boosting system in a basin (for example, separate gathering lines that are not connected), then all gathering and boosting equipment that the person owns or operates in the basin would be considered one facility. Any gathering and boosting equipment that is associated with a single gathering and boosting system, including leased, rented, or contracted activities, is considered to be under common control of the owner or operator of the gathering and boosting system that contains the pipeline. The facility does not include equipment and pipelines that are part of any other industry segment defined in this subpart.

* * * * *

*Facility with respect to the onshore natural gas transmission pipeline segment* means the total U.S. mileage of natural gas transmission pipelines, as defined in this section, owned and operated by an onshore natural gas transmission pipeline owner or operator as defined in this section. The facility does not include pipelines that are part of any other industry segment defined in this subpart.

* * * * *

*Gathering and boosting system* means a single network of pipelines, compressors and process equipment, including equipment to perform natural gas compression, dehydration, and acid gas removal, that has one or more connection points to gas and oil production and a downstream endpoint, typically a gas processing plant, transmission pipeline, LDC pipeline, or other gathering and boosting system.

*Gathering and boosting system owner or operator* means any person that holds a contract in which they agree to transport petroleum or natural gas from one or more onshore petroleum and natural gas production wells to a natural gas processing facility, another gathering and boosting system, a natural gas transmission pipeline, or a distribution pipeline, or any person responsible for custody of the petroleum or natural gas transported.

* * * * *

*Onshore natural gas transmission pipeline owner or operator* means, for interstate pipelines, the person identified as the transmission pipeline owner or operator on the Certificate of Public Convenience and Necessity issued under 15 U.S.C. 717f, or, for intrastate pipelines, the person identified as the owner or operator on the transmission pipeline's Statement of Operating Conditions under section 311 of the Natural Gas Policy Act, or for pipelines that fall under the ''Hinshaw Exemption'' as referenced in section 1(c) of the Natural Gas Act, 15 U.S.C. 717–717 (w)(1994), the person identified as the owner or operator on blanket certificates issued under 18 CFR 284.224. If an intrastate pipeline is not subject to section 311 of the Natural Gas Policy Act (NGPA), the onshore natural gas transmission pipeline owner or operator is the person identified as the owner or operator on reports to the state regulatory body regulating rates and charges for the sale of natural gas to consumers.

* * * * *

*Well identification (ID) number* means the unique and permanent identification number assigned to a petroleum or natural gas well. If the well has been assigned a US Well Number, the well ID number required in this subpart is the US Well Number. If a US Well Number has not been assigned to the well, the well ID number is the identifier established by the well's permitting authority.

* * * * *

■ 9. Revise Table W–1A of subpart W of part 98 to read as follows:

TABLE W–1A TO SUBPART W OF PART 98—DEFAULT WHOLE GAS EMISSION FACTORS FOR ONSHORE PETROLEUM AND NATURAL GAS PRODUCTION FACILITIES AND ONSHORE PETROLEUM AND NATURAL GAS GATHERING AND BOOSTING FACILITIES

| Onshore petroleum and natural gas production and Onshore petroleum and natural gas gathering and boosting | Emission factor (scf/hour/component) |
|---|---|
| **Eastern U.S.** | |
| Population Emission Factors—All Components, Gas Service [1] | |
| Valve | 0.027 |
| Connector | 0.003 |
| Open-ended Line | 0.061 |
| Pressure Relief Valve | 0.040 |
| Low Continuous Bleed Pneumatic Device Vents [2] | 1.39 |
| High Continuous Bleed Pneumatic Device Vents [2] | 37.3 |
| Intermittent Bleed Pneumatic Device Vents [2] | 13.5 |
| Pneumatic Pumps [3] | 13.3 |
| Population Emission Factors—All Components, Light Crude Service [4] | |
| Valve | 0.05 |
| Flange | 0.003 |
| Connector | 0.007 |
| Open-ended Line | 0.05 |
| Pump | 0.01 |
| Other [5] | 0.30 |
| Population Emission Factors—All Components, Heavy Crude Service [6] | |
| Valve | 0.0005 |
| Flange | 0.0009 |
| Connector (other) | 0.0003 |

TABLE W–1A TO SUBPART W OF PART 98—DEFAULT WHOLE GAS EMISSION FACTORS FOR ONSHORE PETROLEUM AND NATURAL GAS PRODUCTION FACILITIES AND ONSHORE PETROLEUM AND NATURAL GAS GATHERING AND BOOSTING FACILITIES—Continued

| Onshore petroleum and natural gas production and Onshore petroleum and natural gas gathering and boosting | Emission factor (scf/hour/component) |
|---|---|
| Open-ended Line | 0.006 |
| Other [5] | 0.003 |
| Population Emission Factors—Gathering Pipelines, by Material Type [7] | |
| Protected Steel | 0.47 |
| Unprotected Steel | 16.59 |
| Plastic/Composite | 2.50 |
| Cast Iron | 27.60 |
| **Western U.S.** | |
| Population Emission Factors—All Components, Gas Service [1] | |
| Valve | 0.121 |
| Connector | 0.017 |
| Open-ended Line | 0.031 |
| Pressure Relief Valve | 0.193 |
| Low Continuous Bleed Pneumatic Device Vents [2] | 1.39 |
| High Continuous Bleed Pneumatic Device Vents [2] | 37.3 |
| Intermittent Bleed Pneumatic Device Vents [2] | 13.5 |
| Pneumatic Pumps [3] | 13.3 |
| Population Emission Factors—All Components, Light Crude Service [4] | |
| Valve | 0.05 |
| Flange | 0.003 |
| Connector (other) | 0.007 |
| Open-ended Line | 0.05 |
| Pump | 0.01 |
| Other [5] | 0.30 |
| Population Emission Factors—All Components, Heavy Crude Service [6] | |
| Valve | 0.0005 |
| Flange | 0.0009 |
| Connector (other) | 0.0003 |
| Open-ended Line | 0.006 |
| Other [5] | 0.003 |
| Population Emission Factors—Gathering Pipelines by Material Type [7] | |
| Protected Steel | 0.47 |
| Unprotected Steel | 16.59 |
| Plastic/Composite | 2.50 |
| Cast Iron | 27.60 |

[1] For multi-phase flow that includes gas, use the gas service emissions factors.
[2] Emission Factor is in units of ''scf/hour/device.''
[3] Emission Factor is in units of ''scf/hour/pump.''
[4] Hydrocarbon liquids greater than or equal to 20°API are considered ''light crude.''
[5] ''Others'' category includes instruments, loading arms, pressure relief valves, stuffing boxes, compressor seals, dump lever arms, and vents.
[6] Hydrocarbon liquids less than 20°API are considered ''heavy crude.''
[7] Emission factors are in units of ''scf/hour/mile of pipeline.''

■ 10. Amend Table W–1B of subpart W of part 98 by revising the table heading to read as follows:

TABLE W–1B TO SUBPART W OF PART 98—DEFAULT AVERAGE COMPONENT COUNTS FOR MAJOR ONSHORE NATURAL GAS PRODUCTION EQUIPMENT AND ONSHORE PETROLEUM AND NATURAL GAS GATHERING AND BOOSTING EQUIPMENT

* * * * *

[FR Doc. 2015–25840 Filed 10–21–15; 08:45 am]

BILLING CODE 6560–50–P

# FEDERAL REGISTER

Vol. 80 Thursday,

No. 204 October 22, 2015


Part VI

## The President


Proclamation 9351—National Character Counts Week, 2015
Proclamation 9352—National Forest Products Week, 2015

Federal Register
Vol. 80, No. 204
Thursday, October 22, 2015

# Presidential Documents

**Title 3—**

## The President

**Proclamation 9351 of October 16, 2015**

## National Character Counts Week, 2015

**By the President of the United States of America**

**A Proclamation**

Since our Nation's founding, generations of people of goodwill have contributed to the basic notion that America succeeds when we look out for one another and lend a hand to building a brighter future for our children and grandchildren. As we celebrate National Character Counts Week, we draw inspiration from those who paved the way for greater tolerance and empathy among all people, recognize the efforts and abilities of those around us, and work to carry forward our common principles and instill them in the hearts and minds of future generations.

In every corner of our country and the globe, we see ordinary people whose desire to make a difference reflects the best of our innate human character. They are the brave men and women in uniform who serve and sacrifice to protect the freedoms we hold dear, and the educators and mentors who tirelessly strive to lift up the lives of those who look up to them. They are parents and coaches and neighbors and colleagues, and in every community they are combatting cynicism and working to realize a better tomorrow for strangers and friends alike. Whether they are the first responders who keep us safe or simply good-hearted citizens, these individuals exemplify our shared values and stand for a powerful fundamental truth: Our society is what we make of it, and each of us—no matter who we are or where we come from—can make meaningful change in the lives of others.

This week, as we hold true to the ideals that bind us together, let us remind our children of their important role in charting our journey forward and empower them with strength and conviction to pursue progress with hope and compassion. If they are able to draw on the inherent qualities of our Nation's character—our commitment to each other, our courage and optimism in the face of challenges, and our determination to make the world we share a better place—I am confident they will continue serving as stewards of kindness and charity and contributing to a fairer, more generous, more peaceful America.

NOW, THEREFORE, I, BARACK OBAMA, President of the United States of America, by virtue of the authority vested in me by the Constitution and the laws of the United States, do hereby proclaim October 18 through October 24, 2015, as National Character Counts Week. I call upon public officials, educators, parents, students, and all Americans to observe this week with appropriate ceremonies, activities, and programs.

IN WITNESS WHEREOF, I have hereunto set my hand this sixteenth day of October, in the year of our Lord two thousand fifteen, and of the Independence of the United States of America the two hundred and fortieth.

[FR Doc. 2015–27106
Filed 10–21–15; 11:15 am]
Billing code 3295–F6–P

# Presidential Documents

**Proclamation 9352 of October 16, 2015**

## National Forest Products Week, 2015

**By the President of the United States of America**

**A Proclamation**

America's forests have defined the landscapes of our country's natural beauty for centuries, and protecting them is imperative to preserving our world for future generations. In addition to providing renewable energy, wildlife habitat, soil health, local foods, and water, they purify the air we breathe and support an industry that employs more than one million Americans. Each day, we use a wide range of forest products—from the wood in our homes to the paper we write on to the packaging that protects our food, medicine, and other goods we rely on. During National Forest Products Week, we recognize the ways in which our Nation's forests contribute to our livelihood and recommit to ensuring their health and stability for centuries to come.

Forests today are at risk due to increasingly extreme wildfires, droughts, severe outbreaks of insects and disease, and climate change. My Administration is committed to sustaining their health and resiliency and to increasing the pace and scale of forest restoration. By collaborating with States, local governments, tribes, industry, private land owners, and other partners, we are working to ensure our forests stay strong and the trails that wind throughout remain intact for all to enjoy. As part of our effort to address climate change, we launched the Climate Action Plan, which recognizes that forests are critical to our effort to address carbon pollution and that we must conserve and restore our forests to protect biodiversity, water resources, and our livelihoods. Additionally, through our America's Great Outdoors Initiative, we are enabling individuals and communities in every corner of our country to take up the cause of safeguarding these natural wonders.

The natural resources and materials provided by forests are essential to our way of life. From timber to biofuels, forests can provide sustainable sources of important goods, and America will continue to benefit from their strength and vitality. Healthy forests lead to a strong economy, a clean environment, and a sustainable future for all our people. During National Forest Products Week, let us rededicate ourselves to preserving them and pledge to always remember the irreplaceable role they play in our lives.

To recognize the importance of products from our forests, the Congress, by Public Law 86–753 (36 U.S.C. 123), as amended, has designated the week beginning on the third Sunday in October of each year as ''National Forest Products Week'' and has authorized and requested the President to issue a proclamation in observance of this week.

NOW, THEREFORE, I, BARACK OBAMA, President of the United States of America, do hereby proclaim October 18 through October 24, 2015, as National Forest Products Week. I call on the people of the United States to join me in recognizing the dedicated individuals who are responsible for the stewardship of our forests and for the preservation, management, and use of these precious natural resources for the benefit of the American people.

IN WITNESS WHEREOF, I have hereunto set my hand this sixteenth day of October, in the year of our Lord two thousand fifteen, and of the Independence of the United States of America the two hundred and fortieth.

[FR Doc. 2015–27107
Filed 10–21–15; 11:15 am]
Billing code 3295–F6–P

# Reader Aids

**Federal Register**

Vol. 80, No. 204

Thursday, October 22, 2015

## CUSTOMER SERVICE AND INFORMATION

| | |
|---|---|
| **Federal Register/Code of Federal Regulations** | |
| General Information, indexes and other finding aids | **202–741–6000** |
| **Laws** | **741–6000** |
| **Presidential Documents** | |
| Executive orders and proclamations | **741–6000** |
| **The United States Government Manual** | **741–6000** |
| **Other Services** | |
| Electronic and on-line services (voice) | **741–6020** |
| Privacy Act Compilation | **741–6064** |
| Public Laws Update Service (numbers, dates, etc.) | **741–6043** |

## ELECTRONIC RESEARCH

### World Wide Web

Full text of the daily Federal Register, CFR and other publications is located at: **www.fdsys.gov.**

Federal Register information and research tools, including Public Inspection List, indexes, and Code of Federal Regulations are located at: **www.ofr.gov.**

### E-mail

**FEDREGTOC-L** (Federal Register Table of Contents LISTSERV) is an open e-mail service that provides subscribers with a digital form of the Federal Register Table of Contents. The digital form of the Federal Register Table of Contents includes HTML and PDF links to the full text of each document.

To join or leave, go to **http://listserv.access.gpo.gov** and select *Online mailing list archives, FEDREGTOC-L, Join or leave the list (or change settings);* then follow the instructions.

**PENS** (Public Law Electronic Notification Service) is an e-mail service that notifies subscribers of recently enacted laws.

To subscribe, go to **http://listserv.gsa.gov/archives/publaws-l.html** and select *Join or leave the list (or change settings);* then follow the instructions.

**FEDREGTOC-L** and **PENS** are mailing lists only. We cannot respond to specific inquiries.

**Reference questions.** Send questions and comments about the Federal Register system to: **fedreg.info@nara.gov**

The Federal Register staff cannot interpret specific documents or regulations.

**CFR Checklist.** Effective January 1, 2009, the CFR Checklist no longer appears in the Federal Register. This information can be found online at **http://bookstore.gpo.gov/.**

## FEDERAL REGISTER PAGES AND DATE, OCTOBER

59021–59548 ..... 1
59549–60026 ..... 2
60027–60274 ..... 5
60275–60510 ..... 6
60511–60794 ..... 7
60795–61086 ..... 8
61087–61272 ..... 9
61273–61716 ..... 13
61717–61974 ..... 14
61975–62428 ..... 15
62429–63070 ..... 16
63071–63408 ..... 19
63409–63666 ..... 20
63667–63888 ..... 21
63889–64304 ..... 22

## CFR PARTS AFFECTED DURING OCTOBER

At the end of each month the Office of the Federal Register publishes separately a List of CFR Sections Affected (LSA), which lists parts and sections affected by documents published since the revision date of each title.

**2 CFR**

1500 ..... 61087
3002 ..... 59549

**3 CFR**

**Proclamations:**
9331 ..... 59547
9332 ..... 60025
9333 ..... 60249
9334 ..... 60257
9335 ..... 60259
9336 ..... 60261
9337 ..... 60263
9338 ..... 60265
9339 ..... 60267
9340 ..... 60787
9341 ..... 60789
9342 ..... 60791
9343 ..... 61085
9344 ..... 61973
9345 ..... 63071
9346 ..... 63073
9347 ..... 63075
9348 ..... 63077
9349 ..... 63407
9350 ..... 63887
9351 ..... 64301
9352 ..... 64303
**Executive Orders:**
10431 (superseded by EO 13709) ..... 60793
10431 (amended by EO 13709) ..... 60793
12829 (superseded by EO 13708) ..... 60271
13652 (amended by EO 13708) ..... 60271
13708 ..... 60271
13709 ..... 60793
**Administrative Orders:**
Memorandums:
Memorandum of September 24, 2015 ..... 60511
Memorandum of September 24, 2015 ..... 61273
Memorandum of September 29, 2015 ..... 61275
Memorandum of September 29, 2015 ..... 62429
Notices:
Notice of October 19, 2015 ..... 63665
**Presidential Determinations:**
No. 2015-13 of September 29, 2015 ..... 62431
No. 2015-14 of September 29, 2015 ..... 62433
No. 2016-01 of October 5, 2015 ..... 62435

**5 CFR**

532 ..... 61277

**6 CFR**

**Proposed Rules:**
27 ..... 62504

**7 CFR**

27 ..... 63889
301 ..... 59551
319 ..... 59557
354 ..... 59561
635 ..... 62439
789 ..... 63890
1220 ..... 63909
**Proposed Rules:**
925 ..... 59077, 60570
944 ..... 59077
989 ..... 62506
1753 ..... 59080
1755 ..... 59080
3555 ..... 60298

**8 CFR**

214 ..... 63911
1003 ..... 59500, 59503
1240 ..... 59503
1241 ..... 59503
**Proposed Rules:**
214 ..... 63376
274a ..... 63376
1001 ..... 59514, 61773
1003 ..... 59514, 61773
1103 ..... 59514, 61773
1212 ..... 59514, 61773
1292 ..... 59514, 61773

**9 CFR**

97 ..... 59561
130 ..... 59561

**10 CFR**

2 ..... 60513, 63409
150 ..... 63409
430 ..... 62441
**Proposed Rules:**
430 ..... 61131, 61996

**12 CFR**

352 ..... 62443
361 ..... 62443
600 ..... 60275
1026 ..... 59944
**Proposed Rules:**
Ch. I ..... 60075
Ch. II ..... 60075
Ch. III ..... 60075

703 ..... 63932

**13 CFR**

**Proposed Rules:**
107 ..... 60077
115 ..... 59667
120 ..... 59667
121 ..... 59667, 60300
123 ..... 63715
125 ..... 60300

**14 CFR**

Ch. 1 ..... 60033
21 ..... 59021, 61975
25 ..... 60027, 60028, 60275
39 ..... 59032, 59568, 59570, 60030, 60281, 60284, 60795, 61088, 61091, 61093, 61098, 61717, 61719, 61720, 61722, 61725, 63079, 63080, 63083, 63420, 63422
45 ..... 59021
71 ..... 59035, 59036, 60286, 60289, 60290, 62445, 62446, 62447, 62449, 62450, 62451, 63084, 63085, 63087, 63088, 63089, 63090, 63091, 63425, 63426
73 ..... 60528, 61727
97 ..... 61975, 61978, 62452, 62455
Ch. I ..... 63912

**Proposed Rules:**
39 ..... 59081, 59672, 60303, 60307, 61131, 61133, 61327, 61330, 63132, 63134, 63136, 63141, 63145, 63147, 63151
71 ..... 62509, 63473
73 ..... 60573, 63153
93 ..... 60310
147 ..... 59674
1214 ..... 63474

**15 CFR**

730 ..... 61100
744 ..... 60529, 61100
902 ..... 59037, 60533
950 ..... 63914

**Proposed Rules:**
774 ..... 61137

**16 CFR**

4 ..... 60797
1109 ..... 61729
1500 ..... 61729

**Proposed Rules:**
1109 ..... 61773
1112 ..... 63155, 63168
1130 ..... 63155
1229 ..... 63164
1232 ..... 63155
1500 ..... 61773

**17 CFR**

15 ..... 59575
18 ..... 59575
36 ..... 59575
40 ..... 59575
140 ..... 59575
232 ..... 59578

**Proposed Rules:**
201 ..... 60082, 60091
210 ..... 59083, 61332, 62274
270 ..... 62274
274 ..... 62274

**18 CFR**

11 ..... 63667

**19 CFR**

4 ..... 61278
7 ..... 61278
10 ..... 61278
12 ..... 60292, 61278
18 ..... 61278
19 ..... 61278
24 ..... 61278
54 ..... 61278
102 ..... 61278
113 ..... 61278
123 ..... 61278
125 ..... 61278
128 ..... 61278
132 ..... 61278
134 ..... 61278
141 ..... 61278
142 ..... 61278
143 ..... 61278
144 ..... 61278
145 ..... 61278
146 ..... 61278
148 ..... 61278
151 ..... 61278
152 ..... 61278
158 ..... 61278
163 ..... 61278
174 ..... 61278
181 ..... 61278
191 ..... 61278

**20 CFR**

404 ..... 63092
416 ..... 63092
422 ..... 61733
655 ..... 62958

**Proposed Rules:**
404 ..... 63717
416 ..... 63717

**21 CFR**

107 ..... 61293
510 ..... 61293
520 ..... 61293
522 ..... 61293
524 ..... 61293
556 ..... 61293
558 ..... 61293, 61298
870 ..... 63671
890 ..... 61298

**Proposed Rules:**
101 ..... 63477
880 ..... 60809

**22 CFR**

**Proposed Rules:**
21 ..... 61138

**23 CFR**

625 ..... 61302

**24 CFR**

203 ..... 61980

**Proposed Rules:**
60 ..... 59092
100 ..... 63720
203 ..... 62510
291 ..... 59690

**25 CFR**

81 ..... 63094
82 ..... 63094

**26 CFR**

1 ..... 60293, 61308

**Proposed Rules:**
1 ..... 61332

**27 CFR**

555 ..... 59580

**28 CFR**

2 ..... 63115

**29 CFR**

20 ..... 60797
1625 ..... 60539
1910 ..... 60033
1926 ..... 60033
4022 ..... 61981

**30 CFR**

917 ..... 63117
935 ..... 63120
938 ..... 63125

**Proposed Rules:**
901 ..... 60107
946 ..... 63933

**31 CFR**

**Proposed Rules:**
1010 ..... 60575

**32 CFR**

236 ..... 59581
1701 ..... 63427

**Proposed Rules:**
188 ..... 61997

**33 CFR**

100 ..... 63674, 63676, 63916
117 ..... 60293, 60294, 61750, 62456, 62457, 63428, 63674, 63676, 63677, 63918, 63919
147 ..... 63674, 63676
165 ..... 59049, 60802, 60803, 61309, 61983, 63674, 63676, 63678, 63919, 63921, 63923, 63926

**34 CFR**

**Proposed Rules:**
Ch. VI ..... 63478

**37 CFR**

380 ..... 59588

**38 CFR**

**Proposed Rules:**
17 ..... 63480

**39 CFR**

**Proposed Rules:**
3050 ..... 63482

**40 CFR**

9 ..... 59593, 64064
30 ..... 61087
31 ..... 61087
33 ..... 61087
35 ..... 61087
40 ..... 61087
45 ..... 61087
46 ..... 61087
47 ..... 61087
52 ..... 59052, 59055, 59610, 59611, 59615, 59620, 59624, 60040, 60043, 60045, 60047, 60049, 60295, 60540, 60541, 60805, 61101, 61107, 61109, 61111, 61112, 61311, 61751, 61752, 62457, 63429, 63431, 63436, 63451
63 ..... 62390
81 ..... 59624, 60049
82 ..... 61985
98 ..... 64262
122 ..... 64064
123 ..... 64064
124 ..... 64064
127 ..... 64064
180 ..... 59627, 60545, 61118, 61122, 61125, 62462, 63680, 63683, 63686
228 ..... 61757
261 ..... 60052
271 ..... 63691
403 ..... 64064
501 ..... 64064
503 ..... 64064
721 ..... 59593

**Proposed Rules:**
Ch. I ..... 60577, 60584
51 ..... 61139
52 ..... 59094, 59695, 59703, 59704, 60108, 60109, 60110, 60314, 60318, 60576, 61140, 61141, 61774, 61775, 62003, 62511, 63185, 63483, 63640, 64160
56 ..... 63935
60 ..... 61139
61 ..... 61139
63 ..... 61139
70 ..... 60110
81 ..... 61775, 63640
180 ..... 63731
260 ..... 63284
261 ..... 63284
262 ..... 63284
263 ..... 63284
264 ..... 63284
265 ..... 63284
266 ..... 63284
267 ..... 63284
271 ..... 63284, 63734
273 ..... 63284
372 ..... 60818

**41 CFR**

**Proposed Rules:**
102–117 ..... 59094
102–118 ..... 59094

**42 CFR**

5 ..... 61993
412 ..... 59057, 60055, 62762
418 ..... 60069
483 ..... 60070
495 ..... 62762

**Proposed Rules:**
414 ..... 59102, 59386, 63484
600 ..... 63936

**43 CFR**

1820 ..... 59634

**Proposed Rules:**
50 ..... 59113
3160 ..... 61646
3170 ..... 61646

**44 CFR**

13 ..... 59549

64.....60071, 63130
78.....59549
79.....59549
152.....59549
201.....59549
204.....59549
206.....59549
207.....59549
208.....59549
304.....59549
360.....59549
361.....59549

**45 CFR**

170.....62602
1206.....63454
1210.....63454
1211.....63454
1216.....63454
1217.....63454
1218.....63454
1220.....63454
1222.....63454
1226.....63454
2556.....63454
**Proposed Rules:**
1370.....61890
1630.....61142

**46 CFR**

2.....62466
5.....62466
11.....62466
107.....62466
113.....62466
114.....62466
117.....62466
125.....62466
159.....62466
162.....62466
175.....62466
180.....62466
**Proposed Rules:**
30.....64192
150.....64192
153.....64192

**47 CFR**

12.....60548, 62470
20.....61918
51.....63322
63.....63322
64.....61129
76.....59635
**Proposed Rules:**
1.....60825
54.....59705, 60012, 62512
69.....59705
76.....59706

**48 CFR**

202.....63928
204.....63928
212.....63928
239.....63928
252.....63928
1823.....60552
1827.....61993
1846.....60552
1852.....60552, 61993
**Proposed Rules:**
2.....60832
4.....60832
13.....60832
18.....60832
19.....60832
36.....60833
53.....63485
202.....61333, 63735
212.....61333, 63735
215.....61333
246.....63735
252.....61333, 63735

**49 CFR**

Ch. III.....59065
350.....59065
360.....63695
365.....59065, 63695
366.....63695
368.....63695
375.....59065
377.....59065
381.....59065
383.....59065
384.....59065
385.....59065, 63695
387.....59065, 63695
389.....59065
390.....59065, 63695
391.....59065
392.....63695
393.....59065
395.....59065, 59664
396.....59065
397.....59065
541.....60555
571.....62487
830.....61317
**Proposed Rules:**
195.....61610
271.....60591
393.....60592
396.....60592
571.....59132, 60320

**50 CFR**

17.....59248, 59424, 59976, 60440, 60468
223.....60560
224.....60560
300.....59037, 60533, 62488
600.....62488
622.....59665, 60565, 62501
635.....60566
648.....60568, 61994, 63929
660.....61318, 61765, 62488
665.....61767, 62488
679.....59075, 60073, 60807, 62502, 63930
**Proposed Rules:**
17.....59858, 60321, 60335, 60754, 60834, 60850, 60962, 60990, 61030, 61568
224.....62008
300.....61146
622.....60601, 60605, 63190
680.....61150, 63950

## LIST OF PUBLIC LAWS

This is a continuing list of public bills from the current session of Congress which have become Federal laws. This list is also available online at *http://www.archives.gov/federal-register/laws*.

The text of laws is not published in the **Federal Register** but may be ordered in ''slip law'' (individual pamphlet) form from the Superintendent of Documents, U.S. Government Publishing Office, Washington, DC 20402 (phone, 202–512–1808). The text will also be made available on the Internet from GPO's Federal Digital System (FDsys) at *http://www.gpo.gov/fdsys*. Some laws may not yet be available.

**H.R. 2835/P.L. 114–68**

Border Jobs for Veterans Act of 2015 (Oct. 16, 2015; 129 Stat. 555)

**S. 986/P.L. 114–69**

Albuquerque Indian School Land Transfer Act (Oct. 16, 2015; 129 Stat. 558)

**S. 1300/P.L. 114–70**

Adoptive Family Relief Act (Oct. 16, 2015; 129 Stat. 561)

**S. 2078/P.L. 114–71**

United States Commission on International Religious Freedom Reauthorization Act of 2015 (Oct. 16, 2015; 129 Stat. 563)

**Last List October 13, 2015**

## Public Laws Electronic Notification Service (PENS)

**PENS** is a free electronic mail notification service of newly enacted public laws. To subscribe, go to *http://listserv.gsa.gov/archives/publaws-l.html*

**Note:** This service is strictly for E-mail notification of new laws. The text of laws is not available through this service. **PENS** cannot respond to specific inquiries sent to this address.