AUTHENTICATED
U.S. GOVERNMENT
INFORMATION
GPO

FEDERAL REGISTER

Vol. 85 Monday,
No. 110 June 8, 2020

Pages 34957–35164 [As Corrected]

OFFICE OF THE FEDERAL REGISTER

The **FEDERAL REGISTER** (ISSN 0097–6326) is published daily, Monday through Friday, except official holidays, by the Office of the Federal Register, National Archives and Records Administration, under the Federal Register Act (44 U.S.C. Ch. 15) and the regulations of the Administrative Committee of the Federal Register (1 CFR Ch. I). The Superintendent of Documents, U.S. Government Publishing Office, is the exclusive distributor of the official edition. Periodicals postage is paid at Washington, DC.

The **FEDERAL REGISTER** provides a uniform system for making available to the public regulations and legal notices issued by Federal agencies. These include Presidential proclamations and Executive Orders, Federal agency documents having general applicability and legal effect, documents required to be published by act of Congress, and other Federal agency documents of public interest.

Documents are on file for public inspection in the Office of the Federal Register the day before they are published, unless the issuing agency requests earlier filing. For a list of documents currently on file for public inspection, see *www.federalregister.gov.*

The seal of the National Archives and Records Administration authenticates the Federal Register as the official serial publication established under the Federal Register Act. Under 44 U.S.C. 1507, the contents of the **Federal Register** shall be judicially noticed.

The **Federal Register** is published in paper and on 24x microfiche. It is also available online at no charge at *www.govinfo.gov*, a service of the U.S. Government Publishing Office.

The online edition of the **Federal Register** is issued under the authority of the Administrative Committee of the Federal Register as the official legal equivalent of the paper and microfiche editions (44 U.S.C. 4101 and 1 CFR 5.10). It is updated by 6:00 a.m. each day the **Federal Register** is published and includes both text and graphics from Volume 1, 1 (March 14, 1936) forward. For more information, contact the GPO Customer Contact Center, U.S. Government Publishing Office. Phone 202-512-1800 or 866-512-1800 (toll free). E-mail, *gpocusthelp.com.*

The annual subscription price for the **Federal Register** paper edition is $860 plus postage, or $929, for a combined **Federal Register, Federal Register** Index and List of CFR Sections Affected (LSA) subscription; the microfiche edition of the **Federal Register** including the **Federal Register** Index and LSA is $330, plus postage. Six month subscriptions are available for one-half the annual rate. The prevailing postal rates will be applied to orders according to the delivery method requested. The price of a single copy of the daily **Federal Register,** including postage, is based on the number of pages: $11 for an issue containing less than 200 pages; $22 for an issue containing 200 to 400 pages; and $33 for an issue containing more than 400 pages. Single issues of the microfiche edition may be purchased for $3 per copy, including postage. Remit check or money order, made payable to the Superintendent of Documents, or charge to your GPO Deposit Account, VISA, MasterCard, American Express, or Discover. Mail to: U.S. Government Publishing Office—New Orders, P.O. Box 979050, St. Louis, MO 63197-9000; or call toll free 1-866-512-1800, DC area 202-512-1800; or go to the U.S. Government Online Bookstore site, see *bookstore.gpo.gov.*

There are no restrictions on the republication of material appearing in the **Federal Register.**

How To Cite This Publication: Use the volume number and the page number. Example: 85 FR 12345.

Postmaster: Send address changes to the Superintendent of Documents, Federal Register, U.S. Government Publishing Office, Washington, DC 20402, along with the entire mailing label from the last issue received.

SUBSCRIPTIONS AND COPIES

PUBLIC

Subscriptions:

Paper or fiche	**202–512–1800**
Assistance with public subscriptions	**202–512–1806**

General online information **202–512–1530; 1–888–293–6498**

Single copies/back copies:

Paper or fiche	**202–512–1800**
Assistance with public single copies	**1–866–512–1800 (Toll-Free)**

FEDERAL AGENCIES

Subscriptions:

Assistance with Federal agency subscriptions:

Email	*FRSubscriptions@nara.gov*
Phone	**202–741–6000**

The Federal Register Printing Savings Act of 2017 (Pub. L. 115-120) placed restrictions on distribution of official printed copies of the daily **Federal Register** to members of Congress and Federal offices. Under this Act, the Director of the Government Publishing Office may not provide printed copies of the daily **Federal Register** unless a Member or other Federal office requests a specific issue or a subscription to the print edition. For more information on how to subscribe use the following website link: *https://www.gpo.gov/frsubs.*

In the original publication of Vol. 85, Issue 110 of the **Federal Register** on Monday, June 8, 2020, the page numbers were incorrect throughout. This reprinting corrects that error. All references and citations to the contents of Vol. 85, Issue 110 should use the page numbers listed herein.

Printed on recycled paper.

Contents

Federal Register

Vol. 85, No. 110

Monday, June 8, 2020

Agency for Healthcare Research and Quality
NOTICES
Agency Information Collection Activities; Proposals, Submissions, and Approvals, 35090–35092
Meetings:
Health Care Research and Training Subcommittee, 35090

Agricultural Marketing Service
PROPOSED RULES
National Organic Program:
Amendments to the National List of Allowed and Prohibited Substances per April 2019 National Organic Standards Board Recommendations (Livestock and Handling), 35011–35015

Agriculture Department
See Agricultural Marketing Service
See Forest Service

Alcohol, Tobacco, Firearms, and Explosives Bureau
NOTICES
Agency Information Collection Activities; Proposals, Submissions, and Approvals:
Prevent All Cigarette Trafficking (PACT) Act Registration Form—ATF Form 5070.1, 35110

Antitrust Division
NOTICES
Changes Under the National Cooperative Research and Production Act:
Automotive Cybersecurity Industry Consortium, 35124–35125
Border Security Technology Consortium, 35125
DVD Copy Control Association, 35125
Petroleum Environmental Research Forum, 35124
Proposed Final Judgment and Competitive Impact Statement:
United States v. Odyssey Investment Partners Fund V, LP et al., 35110–35124

Centers for Disease Control and Prevention
NOTICES
Meetings:
Board of Scientific Counselors, Center for Preparedness and Response, 35093
Board of Scientific Counselors, National Institute for Occupational Safety and Health, National Firefighter Registry Subcommittee, 35093–35094

Centers for Medicare & Medicaid Services
NOTICES
Agency Information Collection Activities; Proposals, Submissions, and Approvals, 35094–35096

Civil Rights Commission
NOTICES
Meetings:
Massachusetts Advisory Committee, 35060–35061

Coast Guard
RULES
Safety Zone:
Highway 99 Partial Bridge Replacement, Stanislaus River, Ripon, CA, 34999–35001
Lake of the Ozarks, Mile Marker .5 on the Main Channel Near Bagnel Dam, Lake Ozark, MO, 35001–35003
Special Local Regulation:
Regattas and Marine Parades; Great Lakes Annual Marine Events, 34993–34994
Special Local Regulations:
Sector Ohio Valley Annual and Recurring Special Local Regulations Update, 34994–34999
PROPOSED RULES
Safety Zone:
Upper Potomac River, Washington, DC, 35028–35031

Commerce Department
See International Trade Administration
See National Oceanic and Atmospheric Administration
See National Technical Information Service
NOTICES
Agency Information Collection Activities; Proposals, Submissions, and Approvals:
The Pledge to America's Workers Presidential Award Program, 35061

Community Development Financial Institutions Fund
NOTICES
Request for Information:
Community Development Financial Institutions, 35159–35160

Comptroller of the Currency
NOTICES
Meetings:
Mutual Savings Association Advisory Committee, 35160

Defense Department
See Engineers Corps
NOTICES
Meetings:
Department of Defense Board of Actuaries, 35081
Privacy Act; Systems of Records, 35080–35081

Drug Enforcement Administration
RULES
Listing of Ethylone in the Code of Federal Regulations and Assignment of an Administration Controlled Substances Code Number, 34967–34969

Energy Department
See Federal Energy Regulatory Commission
NOTICES
Application To Export Electric Energy:
H.Q. Energy Services (U.S) Inc., 35082

Engineers Corps
RULES
Civil Monetary Penalty Inflation Adjustment Rule, 35003–35006

NOTICES
Environmental Impact Statements; Availability, etc.:
Nassau County Back Bay Coastal Storm Risk Management Feasibility Study, 35081–35082

Environmental Protection Agency
RULES
Tolerance Exemption:
Bacillus thuringiensis Cry14Ab-1 Protein in Soybean, 35006–35008
PROPOSED RULES
Air Quality State Implementation Plans; Approvals and Promulgations:
Alabama: Air Quality Control, VOC Definition, 35035–35036
Missouri; Control of Sulfur Emissions From Stationary Boilers, 35031–35032
Tennessee; Nitrogen Oxides SIP Call Plan, 35046–35048
Tennessee; Removal of the Vehicle I/M Program, Hamilton County, TN, 35037–35041
Texas; Beaumont-Port Arthur Area Second Maintenance Plan for 1997 Ozone National Ambient Air Quality Standards, 35041–35046
Utah; Determination of Attainment by the Attainment Date for the Salt Lake City and Provo 2006 24-Hour Fine Particulate Matter Nonattainment Areas, 35033–35035
Proposed Anti-Backsliding Determination for Renewable Fuels and Air Quality, 35048–35049

Federal Aviation Administration
RULES
Airworthiness Directives:
Airbus Helicopters, 34957–34959
Rolls-Royce Deutschland Ltd and Co KG (Type Certificate Previously Held by Rolls-Royce plc) Turbofan Engines, 34959–34962
Amendment of Class D Airspace and Amendment and Revocation of the Class E Airspace:
Multiple Texas Towns, 34964–34967
Amendment of Class D and E Airspace:
Dallas-Fort Worth, Fort Worth, and Stephenville, TX, 34962–34964
PROPOSED RULES
Airworthiness Directives:
Airbus SAS Airplanes, 35015–35018
General Electric Company Turbofan Engines, 35021–35026
Leonardo S.p.a. Helicopters, 35018–35021
Revocation, Establishment, and Amendment of Class E Airspace:
Multiple Texas Towns, 35026–35028
NOTICES
Request To Release Airport Land:
Release of Land Affecting Federal Grant Assurance Obligations at Salinas Municipal Airport, Salinas, Monterey County, CA, 35159

Federal Communications Commission
NOTICES
Media Bureau Announces Settlement Opportunity for Mutually Exclusive Low Power Television and TV Translator Applications—June 1, 2020–July 31, 2020, 35085–35086
Radio Broadcasting Services:
AM or FM Proposals To Change the Community of License, 35088
Wireless Telecommunications Bureau Seeks Comment on Optional Lump Sum Payments for 3.7–4.2 GHz Band Incumbent Earth Station Relocation Expenses, 35086–35088

Federal Deposit Insurance Corporation
NOTICES
Termination of Receivership, 35088–35089

Federal Emergency Management Agency
RULES
Final Flood Elevation Determinations, 35008–35010

Federal Energy Regulatory Commission
NOTICES
Combined Filings, 35083–35085
Petition for Declaratory Order:
Southern California Edison Co., 35083

Federal Mine Safety and Health Review Commission
NOTICES
Meetings; Sunshine Act, 35090
Sending Case Issuances Through Electronic Mail, 35090
Temporary Suspension of In-Person Hearings, 35089–35090

Fish and Wildlife Service
NOTICES
Endangered and Threatened Species:
Receipt of Recovery Permit Applications, 35105–35106

Food and Drug Administration
NOTICES
Meetings:
Reauthorization of the Prescription Drug User Fee Act, 35096–35099

Forest Service
NOTICES
Meetings:
Collaborative Forest Restoration Program Technical Advisory Panel, 35060

Health and Human Services Department
See Agency for Healthcare Research and Quality
See Centers for Disease Control and Prevention
See Centers for Medicare & Medicaid Services
See Food and Drug Administration
See Health Resources and Services Administration
See National Institutes of Health
NOTICES
Declaration under the Public Readiness and Emergency Preparedness Act for Medical Countermeasures Against COVID–19:
Amendment, 35100–35102

Health Resources and Services Administration
NOTICES
Agency Information Collection Activities; Proposals, Submissions, and Approvals:
Maternal Health Portfolio Evaluation Design, 35099–35100

Homeland Security Department
See Coast Guard
See Federal Emergency Management Agency

Interior Department
See Fish and Wildlife Service

See Land Management Bureau
See National Park Service
See Reclamation Bureau

Internal Revenue Service
NOTICES
Meetings:
Taxpayer Advocacy Panel Joint Committee, 35161
Taxpayer Advocacy Panel Taxpayer Assistance Center Improvements Project Committee, 35161
Taxpayer Advocacy Panel Taxpayer Communications Project Committee, 35160–35161
Taxpayer Advocacy Panel's Notices and Correspondence Project Committee, 35162
Taxpayer Advocacy Panel's Special Projects Committee, 35162
Taxpayer Advocacy Panel's Tax Forms and Publications Project Committee, 35161–35162
Taxpayer Advocacy Panel's Toll-Free Phone Line Project Committee, 35161

International Trade Administration
NOTICES
Antidumping or Countervailing Duty Investigations, Orders, or Reviews, 35068–35077
Antidumping or Countervailing Duty Investigations, Orders, or Reviews:
Certain Hot-Rolled Carbon Steel Flat Products From the People's Republic of China, 35064–35065
Certain Kitchen Appliance Shelving and Racks From the People's Republic of China, 35061–35063
Certain Kitchen Appliance Shelving and Racks From the People's Republic of China, 35063–35064
Steel Concrete Reinforcing Bar From Mexico, 35065–35067
Determination in the Less-Than-Fair-Value Investigation:
Difluoromethane (R–32) From the People's Republic of China, 35067

International Trade Commission
NOTICES
Investigations; Determinations, Modifications, and Rulings, etc.:
Certain Beverage Dispensing Systems and Components Thereof, 35109–35110

Justice Department
See Alcohol, Tobacco, Firearms, and Explosives Bureau
See Antitrust Division
See Drug Enforcement Administration

Labor Department
See Wage and Hour Division

Land Management Bureau
PROPOSED RULES
Forest Management Decision Protest Process and Timber Sale Administration, 35049–35059
NOTICES
Requests for Nominations:
Rio Puerco Management Committee, New Mexico, 35106

National Archives and Records Administration
NOTICES
Public Interest Declassification Board; Revised Bylaws, 35125–35127
Request for Nominations:
Freedom of Information Act Advisory Committee, 35127–35128

National Institutes of Health
NOTICES
Meetings:
Center for Scientific Review, 35103–35104
National Institute of Allergy and Infectious Diseases, 35102–35103
National Institute of Diabetes and Digestive and Kidney Diseases, 35104–35105
National Institute of General Medical Sciences, 35102–35103
National Institute of Mental Health, 35104
National Institute on Minority Health and Health Disparities, 35102

National Oceanic and Atmospheric Administration
NOTICES
Meetings:
Advisory Committee to the U.S. Section to the International Commission for the Conservation of Atlantic Tunas Species Working Groups, 35077–35078
National Sea Grant Advisory Board, 35079–35080
Reopening and of Closure—Administrative Appeal Decision Record:
Federal Consistency Appeal by WesternGeco of North Carolina Objection, 35079
Federal Consistency Appeal by WesternGeco of South Carolina Objection, 35078

National Park Service
NOTICES
Meetings:
Acadia National Park Advisory Commission, 35107–35108
National Register of Historic Places:
Pending Nominations and Related Actions, 35106–35107

National Science Foundation
NOTICES
Meetings:
Business and Operations Advisory Committee, 35128
Proposal Review, 35128

National Technical Information Service
NOTICES
Meetings:
National Technical Information Service Advisory Board, 35080

Nuclear Regulatory Commission
NOTICES
Agency Information Collection Activities; Proposals, Submissions, and Approvals:
Nondiscrimination in Federally Assisted Programs or Activities Receiving Assistance From the Commission, 35128–35130

Postal Regulatory Commission
NOTICES
Market Dominant Price Adjustment, 35130–35131
New Postal Products, 35130

Reclamation Bureau
NOTICES
Lake Powell Pipeline Project Draft Environmental Impact Statement/Draft Resource Management Plan Amendment; Coconino and Mohave Counties, Arizona and Washington and Kane Counties, Utah, 35108–35109

Securities and Exchange Commission
NOTICES
Self-Regulatory Organizations; Proposed Rule Changes:
Miami International Securities Exchange, LLC, 35153–35156
MIAX Emerald, LLC, 35145–35149
MIAX PEARL, LLC, 35142–35145
Nasdaq ISE, LLC, 35131–35134
Nasdaq PHLX, LLC, 35149–35151
NYSE Chicago, Inc., 35138–35142
The Nasdaq Stock Market LLC, 35134–35138
The Options Clearing Corp., 35151–35153

State Department
NOTICES
Meetings:
Cultural Property Advisory Committee, 35157–35158
Proposal To Extend Cultural Property Agreement Between the United States and Colombia, 35156–35157
Proposal To Extend Cultural Property Agreement Between the United States and Italy, 35157

Surface Transportation Board
NOTICES
Release of Waybill Data, 35158

Trade Representative, Office of United States
NOTICES
Product Exclusion Amendment:
China's Acts, Policies, and Practices Related to Technology Transfer, Intellectual Property, and Innovation, 35158–35159

Transportation Department
See Federal Aviation Administration

Treasury Department
See Community Development Financial Institutions Fund
See Comptroller of the Currency
See Internal Revenue Service
NOTICES
Survey of Foreign Ownership of U.S. Securities as of June 30, 2020, 35162–35163

Wage and Hour Division
RULES
Defining and Delimiting the Exemptions for Executive, Administrative, Professional, Outside Sales and Computer Employees:
Correction, 34969–34970
Fluctuating Workweek Method of Computing Overtime, 34970–34993

Reader Aids

Consult the Reader Aids section at the end of this issue for phone numbers, online resources, finding aids, and notice of recently enacted public laws.

To subscribe to the Federal Register Table of Contents electronic mailing list, go to https://public.govdelivery.com/accounts/USGPOOFR/subscriber/new, enter your e-mail address, then follow the instructions to join, leave, or manage your subscription.

CFR PARTS AFFECTED IN THIS ISSUE

A cumulative list of the parts affected this month can be found in the Reader Aids section at the end of this issue.

7 CFR

Proposed Rules:

205 35011

14 CFR

39 (2 documents) 34957, 34959

71 (2 documents) 34962, 34964

Proposed Rules:

39 (5 documents) 35015, 35016, 35018, 35021, 35024

71 35026

21 CFR

1308 34967

29 CFR

541 34969

778 34970

33 CFR

100 (2 documents) 34993, 34994

165 (2 documents) 34999, 35001

207 35003

326 35003

Proposed Rules:

165 35028

40 CFR

174 35006

Proposed Rules:

52 (6 documents) 35031, 35033, 35035, 35037, 35041, 35046

80 35048

43 CFR

Proposed Rules:

5000 35049

5400 35049

5410 35049

5420 35049

5430 35049

5440 35049

5450 35049

5460 35049

5470 35049

5500 35049

44 CFR

67 35008

Rules and Regulations

Federal Register
Vol. 85, No. 110
Monday, June 8, 2020

This section of the FEDERAL REGISTER contains regulatory documents having general applicability and legal effect, most of which are keyed to and codified in the Code of Federal Regulations, which is published under 50 titles pursuant to 44 U.S.C. 1510.

The Code of Federal Regulations is sold by the Superintendent of Documents.

DEPARTMENT OF TRANSPORTATION

Federal Aviation Administration

14 CFR Part 39

[Docket No. FAA–2020–0239; Product Identifier 2018–SW–073–AD; Amendment 39–21136; AD 2020–12–02]

RIN 2120–AA64

Airworthiness Directives; Airbus Helicopters

AGENCY: Federal Aviation Administration (FAA), Department of Transportation (DOT).

ACTION: Final rule.

SUMMARY: The FAA is adopting a new airworthiness directive (AD) for all Airbus Helicopters Model EC120B helicopters. This AD was prompted by a report that a changed manufacturing process for the tail rotor blades (TRB) was implemented, affecting the structural characteristics of the blades and generating a new part number for these blades. This AD requires re-identifying each affected TRB having a certain part number and serial number and establishing a life limit for the new part numbers. This AD also prohibits installation of any affected TRB identified with the old part number on any helicopter. The FAA is issuing this AD to address the unsafe condition on these products.

DATES: This AD is effective July 13, 2020.

The Director of the Federal Register approved the incorporation by reference of a certain publication listed in this AD as of July 13, 2020.

ADDRESSES: For service information identified in this final rule, contact Airbus Helicopters, 2701 N Forum Drive, Grand Prairie, TX 75052; telephone 972–641–0000 or 800–232–0323; fax 972–641–3775; or at *https://www.airbus.com/helicopters/services/technical-support.html.* You may view this service information at the FAA, Office of the Regional Counsel, Southwest Region, 10101 Hillwood Pkwy., Room 6N–321, Fort Worth, TX 76177. For information on the availability of this material at the FAA, call 817–222–5110. It is also available on the internet at *https://www.regulations.gov* by searching for and locating Docket No. FAA–2020–0239.

Examining the AD Docket

You may examine the AD docket on the internet at *https://www.regulations.gov* by searching for and locating Docket No. FAA–2020–0239; or in person at Docket Operations between 9 a.m. and 5 p.m., Monday through Friday, except Federal holidays. The AD docket contains this final rule, any comments received, and other information. The address for Docket Operations is U.S. Department of Transportation, Docket Operations, M–30, West Building Ground Floor, Room W12–140, 1200 New Jersey Avenue SE, Washington, DC 20590.

FOR FURTHER INFORMATION CONTACT: Kristi Bradley, Aviation Safety Engineer, Safety Management Section, Rotorcraft Standards Branch, FAA, 10101 Hillwood Pkwy., Fort Worth, TX 76177; telephone 817–222–5485; email *Kristin.Bradley@faa.gov.*

SUPPLEMENTARY INFORMATION:

Discussion

The FAA issued a notice of proposed rulemaking (NPRM) to amend 14 CFR part 39 by adding an AD that would apply to all Airbus Helicopters Model EC120B helicopters. The NPRM published in the **Federal Register** on March 11, 2020 (85 FR 14178). The NPRM was prompted by a report that a changed manufacturing process for the TRB was implemented, affecting the structural characteristics of the blades and generating a new part number for these blades. The NPRM proposed to require re-identifying each affected TRB having a certain part number and serial number and establishing a life limit for the new part numbers. The NPRM also proposed to prohibit installation of any affected TRB identified with the old part number on any helicopter. The FAA is issuing this AD to ensure the new part number (P/N) TRBs do not exceed their life limit, which could lead to loss of the TRB and subsequent loss of control of the helicopter.

The European Aviation Safety Agency (now European Union Aviation Safety Agency) (EASA), which is the Technical Agent for the Member States of the European Union, has issued EASA AD 2018–0183, dated August 28, 2018 (also referred to as the Mandatory Continuing Airworthiness Information, or ''the MCAI''), to correct an unsafe condition for all Airbus Helicopters Model EC120B helicopters. You may examine the MCAI in the AD docket on the internet at *https://www.regulations.gov* by searching for and locating Docket No. FAA–2020–0239.

Comments

The FAA gave the public the opportunity to participate in developing this final rule. The FAA received no comments on the NPRM or on the determination of the cost to the public.

Conclusion

The FAA reviewed the relevant data and determined that air safety and the public interest require adopting this final rule as proposed, except for minor editorial changes. The FAA has determined that these minor changes:

- Are consistent with the intent that was proposed in the NPRM for addressing the unsafe condition; and
- Do not add any additional burden upon the public than was already proposed in the NPRM.

Related Service Information Under 1 CFR Part 51

Airbus Helicopters has issued Alert Service Bulletin EC120–04A008, Revision 0, dated July 18, 2018 (''ASB EC120–04A008''). This service information describes procedures for re-identifying a TRB with P/N C642A0300103 for certain serial numbers as specified in ASB EC120–04A008. This service information is reasonably available because the interested parties have access to it through their normal course of business or by the means identified in the **ADDRESSES** section.

Costs of Compliance

The FAA estimates that this AD affects 94 helicopters of U.S. registry. The FAA estimates the following costs to comply with this AD:

ESTIMATED COSTS FOR REQUIRED ACTIONS *

Labor cost	Parts cost	Cost per product	Cost on U.S. operators
1 work-hour × $85 per hour = $85	$0 **	$85	$7,990 *

* The FAA has received no definitive data that would enable providing cost estimates for the additional applicable maintenance instructions specified in this AD.
** The FAA has received no definitive data on the parts cost.

Authority for This Rulemaking

Title 49 of the United States Code specifies the FAA's authority to issue rules on aviation safety. Subtitle I, section 106, describes the authority of the FAA Administrator. Subtitle VII: Aviation Programs, describes in more detail the scope of the Agency's authority.

The FAA is issuing this rulemaking under the authority described in Subtitle VII, Part A, Subpart III, Section 44701: General requirements. Under that section, Congress charges the FAA with promoting safe flight of civil aircraft in air commerce by prescribing regulations for practices, methods, and procedures the Administrator finds necessary for safety in air commerce. This regulation is within the scope of that authority because it addresses an unsafe condition that is likely to exist or develop on products identified in this rulemaking action.

Regulatory Findings

This AD will not have federalism implications under Executive Order 13132. This AD will not have a substantial direct effect on the States, on the relationship between the national government and the States, or on the distribution of power and responsibilities among the various levels of government.

For the reasons discussed above, I certify that this AD:

(1) Is not a ''significant regulatory action'' under Executive Order 12866,

(2) Will not affect intrastate aviation in Alaska, and

(3) Will not have a significant economic impact, positive or negative, on a substantial number of small entities under the criteria of the Regulatory Flexibility Act.

List of Subjects in 14 CFR Part 39

Air transportation, Aircraft, Aviation safety, Incorporation by reference, Safety.

Adoption of the Amendment

Accordingly, under the authority delegated to me by the Administrator, the FAA amends 14 CFR part 39 as follows:

PART 39—AIRWORTHINESS DIRECTIVES

■ 1. The authority citation for part 39 continues to read as follows:

Authority: 49 U.S.C. 106(g), 40113, 44701.

§ 39.13 [Amended]

■ 2. The FAA amends § 39.13 by adding the following new airworthiness directive (AD):

2020–12–02 Airbus Helicopters: Amendment 39–21136; Docket No. FAA–2020–0239; Product Identifier 2018–SW–073–AD.

(a) Effective Date

This AD is effective July 13, 2020.

(b) Affected ADs

None.

(c) Applicability

This AD applies to all Airbus Helicopters Model EC120B helicopters, certificated in any category.

(d) Subject

The Joint Aircraft System/Component (JASC) Code 6410, Tail rotor blades.

(e) Reason

This AD was prompted by a report that a new manufacturing process for the tail rotor blades (TRBs) has been implemented, affecting the structural characteristics of the TRB and generating a new part number (P/N) for these blades. It was determined that a new life limit is needed for the new P/N TRBs. The FAA is issuing this AD to ensure the new P/N TRBs do not exceed their life limit, which could lead to loss of the TRB and subsequent loss of control of the helicopter.

(f) Compliance

Comply with this AD within the compliance times specified, unless already done.

(g) Definition of an Affected Part for Re-Identification and Validation of Rework/Repair/Modification

An ''affected part'' is a TRB having P/N C642A0300103 and a serial number specified in Appendix 4.A. of Airbus Helicopters Alert Service Bulletin EC120–04A008, Revision 0, dated July 18, 2018 (''ASB EC120–04A008'').

(h) Part Replacement (Life Limit Implementation)

Before exceeding 8,500 hours time-in-service (TIS) since first installation on a helicopter: Remove from service each TRB having P/N C642A0300104 or P/N C642A0300105.

(i) Part Re-Identification and Validation of Rework/Repair/Modification

(1) Within 1,000 hours TIS after the effective date of this AD: Re-identify each affected part in accordance with 3.B. of the Accomplishment Instructions of ASB EC120–04A008.

(2) Within 6 months after the effective date of this AD, for each affected part which has been subject to rework, repair, or modification before the re-identification as required by paragraph (i)(1) of this AD, contact the Manager, Safety Management Section, Rotorcraft Standards Branch, FAA, for additional applicable maintenance instructions and, within the compliance time identified in those instructions, accomplish those instructions accordingly.

(j) Parts Installation Prohibition and Rework/Repair/Modification Limitation

(1) As of the effective date of this AD, no person may install a TRB having P/N C642A0300103 and a serial number specified in Appendix 4.A. of ASB EC120–04A008 on any helicopter.

(2) As of the effective date of this AD, no person may accomplish any rework, repair, or modification of an affected part, unless it has been determined that the rework, repair, or modification is FAA-approved for P/N C642A0300105.

(k) Alternative Methods of Compliance (AMOCs)

(1) The Manager, Safety Management Section, Rotorcraft Standards Branch, FAA, may approve AMOCs for this AD. Send your proposal to: Kristi Bradley, Aviation Safety Engineer, Safety Management Section, Rotorcraft Standards Branch, FAA, 10101 Hillwood Pkwy., Fort Worth, TX 76177; telephone 817–222–5485; email *9-ASW-FTW-AMOC-Requests@faa.gov*.

(2) For operations conducted under a 14 CFR part 119 operating certificate or under 14 CFR part 91, subpart K, notify your principal inspector or lacking a principal inspector, the manager of the local flight standards district office or certificate holding district office, before operating any aircraft complying with this AD through an AMOC.

(l) Related Information

(1) Refer to Mandatory Continuing Airworthiness Information (MCAI) European Aviation Safety Agency (now European Union Aviation Safety Agency) AD 2018–0183, dated August 28, 2018, for related information. This MCAI may be found in the AD docket on the internet at *https://www.regulations.gov* by searching for and locating Docket No. FAA–2020–0239.

(2) For more information about this AD, contact Kristi Bradley, Aviation Safety Engineer, Safety Management Section, Rotorcraft Standards Branch, FAA, 10101 Hillwood Pkwy., Fort Worth, TX 76177; telephone 817–222–5485; email *Kristin.Bradley@faa.gov.*

(m) Material Incorporated by Reference

(1) The Director of the Federal Register approved the incorporation by reference (IBR) of the service information listed in this paragraph under 5 U.S.C. 552(a) and 1 CFR part 51.

(2) You must use this service information as applicable to do the actions required by this AD, unless this AD specifies otherwise.

(i) Airbus Helicopters Alert Service Bulletin EC120–04A008, Revision 0, dated July 18, 2018.

(ii) [Reserved]

(3) For service information identified in this AD, contact Airbus Helicopters, 2701 N Forum Drive, Grand Prairie, TX 75052; telephone 972–641–0000 or 800–232–0323; fax 972–641–3775; or at *https://www.helicopters.airbus.com/website/en/ref/Technical-Support_73.html.*

(4) You may view this service information at the FAA, Office of the Regional Counsel, Southwest Region, 10101 Hillwood Pkwy., Room 6N–321, Fort Worth, TX 76177. For information on the availability of this material at the FAA, call 817–222–5110.

(5) You may view this service information that is incorporated by reference at the National Archives and Records Administration (NARA). For information on the availability of this material at NARA, email *fedreg.legal@nara.gov,* or go to: *https://www.archives.gov/federal-register/cfr/ibr-locations.html.*

Issued on May 28, 2020.

Lance T. Gant,

Director, Compliance & Airworthiness Division, Aircraft Certification Service.

[FR Doc. 2020–12342 Filed 6–5–20; 8:45 am]

BILLING CODE 4910–13–P

DEPARTMENT OF TRANSPORTATION

Federal Aviation Administration

14 CFR Part 39

[Docket No. FAA–2019–1109; Project Identifier MCAI–2019–00115–E; Amendment 39–21135; AD 2020–12–01]

RIN 2120–AA64

Airworthiness Directives; Rolls-Royce Deutschland Ltd & Co KG (Type Certificate Previously Held by Rolls-Royce plc) Turbofan Engines

AGENCY: Federal Aviation Administration (FAA), DOT.

ACTION: Final rule.

SUMMARY: The FAA is adopting a new airworthiness directive (AD) for certain Rolls-Royce Deutschland Ltd. & Co KG (RRD) Trent XWB–75, XWB–79, XWB–79B, and XWB–84 model turbofan engines. This AD was prompted by analysis by the manufacturer of the low-pressure compressor (LPC) outlet guide vane (OGV) assembly and LPC OGV outer mount ring assembly. The analysis predicted that when the front engine mount is in the fail-safe condition, the most highly stressed LPC OGV outer mount ring assembly has a life that could be substantially less than one shop visit interval. This AD requires initial and repetitive inspections of the LPC OGV outer mount ring assembly and, depending on the results of the inspections, possible replacement of the LPC OGV outer mount ring assembly. The FAA is issuing this AD to address the unsafe condition on these products.

DATES: This AD is effective July 13, 2020.

The Director of the Federal Register approved the incorporation by reference of a certain publication listed in this AD as of July 13, 2020.

ADDRESSES: For service information identified in this final rule, contact Rolls-Royce Deutschland Ltd & Co KG, Eschenweg 11, 15827 Blankenfelde-Mahlow, Germany; phone: +49 (0) 33 708 6 0; email: *https://www.rolls-royce.com/contact-us.aspx.* You may view this service information at the FAA, Airworthiness Products Section, Operational Safety Branch, 1200 District Avenue, Burlington, MA 01803. For information on the availability of this material at the FAA, call 781–238–7759. It is also available on the internet at *https://www.regulations.gov* by searching for and locating Docket No. FAA–2019–1109.

Examining the AD Docket

You may examine the AD docket on the internet at *https://www.regulations.gov* by searching for and locating Docket No. FAA–2019–1109; or in person at Docket Operations between 9 a.m. and 5 p.m., Monday through Friday, except Federal holidays. The AD docket contains this final rule, the mandatory continuing airworthiness information (MCAI), any comments received, and other information. The address for Docket Operations is U.S. Department of Transportation, Docket Operations, M–30, West Building Ground Floor, Room W12–140, 1200 New Jersey Avenue SE, Washington, DC, 20590.

FOR FURTHER INFORMATION CONTACT: Stephen Elwin, Aerospace Engineer, ECO Branch, FAA, 1200 District Avenue, Burlington, MA 01803; phone: 781–238–7236; fax: 781–238–7199; email: *Stephen.L.Elwin@faa.gov.*

SUPPLEMENTARY INFORMATION:

Discussion

The FAA issued a notice of proposed rulemaking (NPRM) to amend 14 CFR part 39 by adding an AD that would apply to certain RRD Trent XWB–75, XWB–79, XWB–79B, and XWB–84 turbofan engines. The NPRM published in the **Federal Register** on February 12, 2020 (85 FR 7899). The NPRM was prompted by analysis by the manufacturer of the LPC OGV assembly and LPC OGV outer mount ring assembly. The analysis predicted that when the front engine mount is in the fail-safe condition, the most highly stressed LPC OGV outer mount ring assembly has a life that could be substantially less than one shop visit interval. The NPRM proposed to require initial and repetitive inspections of the LPC OGV outer mount ring assembly and, depending on the results of the inspections, possible replacement of the LPC OGV outer mount ring assembly. The FAA is issuing this AD to address the unsafe condition on these products.

The European Union Aviation Safety Agency (EASA), which is the Technical Agent for the Member States of the European Community, has issued EASA AD 2019–0234, dated September 19, 2019 (referred to after this as ''the MCAI''), to address the unsafe condition on these products. The MCAI states:

> The purpose of the engine mount is to position the engine relative to the pylon and to transfer all loads and rotational moments between the engine and pylon. The front engine mount support structure (EMSS) consists of the low pressure compressor (LPC) outlet guide vane (OGV) assembly and OGV outer mount ring assembly. Revised analysis of these parts, when the front engine mount (FEM) is engaged in the fail-safe condition, has now been undertaken using more advanced modelling techniques. This analysis predicts that, once the FEM is in the fail-safe condition, the most highly stressed LPC OGV has a life that could be substantially less than one shop visit interval.
>
> This condition, if not detected and corrected, could lead to failure of the EMSS, possibly resulting in engine separation and reduced control of the aeroplane.
>
> To address this potential unsafe condition, Rolls-Royce introduced inspections to protect against the FEM entering the failsafe condition following a failure of the OGV outer mount ring assembly lugs, and published the NMSB to provide instructions.
>
> For the reason described above, this [EASA] AD requires repetitive inspections of the OGV outer mount ring assembly lug fillet area and, depending on findings, accomplishment of applicable corrective action(s).

You may obtain further information by examining the MCAI in the AD

docket on the internet at *https://www.regulations.gov* by searching for and locating Docket No. FAA–2019–1109.

Comments

The FAA gave the public the opportunity to participate in developing this final rule. The following presents the comments received on the NPRM and the FAA's response to each comment.

Request To Allow Replacement of the Engine

Delta Air Lines, Inc. (DAL) requested that the FAA revise paragraph (g)(4)(i), Required Actions, of this AD to ''Before further flight or before release to service of the engine, as applicable, replace the engine or the OGV outer mount ring assembly with a part eligible for installation.'' DAL reasoned that neither the aircraft maintenance manual (AMM) nor Rolls-Royce plc (RR) Alert Non-Modification Service Bulletin (NMSB) Trent XWB 72–AK188, Revision 2, dated December 17, 2019, provide instructions on replacing the LPC OGV outer mount ring assembly. Therefore, if the LPC OGV outer mount ring assembly requires replacement, the engine will be removed per the AMM, and the LPC OGV outer mount ring assembly replaced per the engine manual.

The FAA agrees that the installation of another engine with an LPC OGV outer mount ring assembly that meets the initial and repetitive inspection requirements of paragraphs (g)(1) through (3) of this AD would be acceptable. However, the FAA disagrees with adding the language suggested by DAL because the operator is only responsible for correcting the unsafe condition. The FAA identified the unsafe condition in the LPC OGV outer mount ring assembly and this AD, therefore, requires that this part be replaced.

Request To Define Parts Eligible for Installation

DAL commented that the proposed AD does not define what would be considered a part eligible for installation. On the other hand, the MCAI requires that the LPC OGV outer mount ring assembly be replaced with a new part. DAL suggested that a part eligible for installation include an engine that satisfies the requirements of paragraphs (g)(1) through (3) of this AD or a new LPC OGV outer mount ring assembly.

The FAA agrees to add a definition of ''a part eligible for installation'' in this AD. The FAA disagrees with adding the language suggested by DAL because the FAA agrees with the MCAI requirement of replacing the LPC OGV outer mount ring assembly with a new part. As noted in the previous response, the operator may elect to install another engine that meets the initial and repetitive inspection requirements of paragraphs (g)(1) through (3) of this AD.

Support for the AD

The Air Line Pilots Association, International expressed support for the AD as written.

Conclusion

The FAA reviewed the relevant data, considered the comments received, and determined that air safety and the public interest require adopting this final rule with the changes described previously and minor editorial changes. The FAA has determined that these minor changes:

- Are consistent with the intent that was proposed in the NPRM for addressing the unsafe condition; and
- Do not add any additional burden upon the public than was already proposed in the NPRM.

The FAA has also determined that these changes will not increase the economic burden on any operator or increase the scope of this final rule.

Related Service Information Under 1 CFR Part 51

The FAA reviewed RR Alert NMSB Trent XWB 72–AK188, Revision 2, dated December 17, 2019. The NMSB describes procedures for performing fluorescent penetrant inspections (FPIs) of the LPC OGV outer mount ring assembly. This service information is reasonably available because the interested parties have access to it through their normal course of business or by the means identified in the **ADDRESSES** section.

Costs of Compliance

The FAA estimates that this AD affects 26 engines installed on airplanes of U.S. registry.

The FAA estimates the following costs to comply with this AD:

ESTIMATED COSTS

Action	Labor cost	Parts cost	Cost per product	Cost on U.S. operators
FPI the LPC OGV outer mount ring assembly	3 work-hours × $85 per hour = $255	$0	$255	$6,630

The FAA estimates the following costs to do any necessary replacements that would be required based on the results of the mandated inspection. The FAA has no way of determining the number of aircraft that might need this replacement:

ON-CONDITION COSTS

Action	Labor cost	Parts cost	Cost per product
Replace the LPC OGV outer mount ring assembly (KH10678).	8 work-hours × $85 per hour = $680	$2,418,121	$2,418,801

Authority for This Rulemaking

Title 49 of the United States Code specifies the FAA's authority to issue rules on aviation safety. Subtitle I, section 106, describes the authority of the FAA Administrator. Subtitle VII: Aviation Programs, describes in more detail the scope of the Agency's authority.

The FAA is issuing this rulemaking under the authority described in Subtitle VII, Part A, Subpart III, Section 44701: ''General requirements.'' Under that section, Congress charges the FAA with promoting safe flight of civil aircraft in air commerce by prescribing regulations for practices, methods, and

procedures the Administrator finds necessary for safety in air commerce. This regulation is within the scope of that authority because it addresses an unsafe condition that is likely to exist or develop on products identified in this rulemaking action.

Regulatory Findings

This AD will not have federalism implications under Executive Order 13132. This AD will not have a substantial direct effect on the States, on the relationship between the national Government and the States, or on the distribution of power and responsibilities among the various levels of government.

For the reasons discussed above, I certify this AD:

(1) Is not a ''significant regulatory action'' under Executive Order 12866,

(2) Will not affect intrastate aviation in Alaska, and

(3) Will not have a significant economic impact, positive or negative, on a substantial number of small entities under the criteria of the Regulatory Flexibility Act.

List of Subjects in 14 CFR Part 39

Air transportation, Aircraft, Aviation safety, Incorporation by reference, Safety.

Adoption of the Amendment

Accordingly, under the authority delegated to me by the Administrator, the FAA amends 14 CFR part 39 as follows:

PART 39—AIRWORTHINESS DIRECTIVES

■ 1. The authority citation for part 39 continues to read as follows:

Authority: 49 U.S.C. 106(g), 40113, 44701.

§ 39.13 [Amended]

■ 2. The FAA amends § 39.13 by adding the following new airworthiness directive (AD):

2020–12–01 Rolls-Royce Deutschland Ltd & Co KG (Type Certificate previously held by Rolls-Royce plc): Amendment 39–21135; Docket No. FAA–2019–1109; Project Identifier MCAI–2019–00115–E.

(a) Effective Date

This AD is effective July 13, 2020.

(b) Affected ADs

None.

(c) Applicability

This AD applies to Rolls-Royce Deutschland Ltd. & Co KG (RRD) (Type Certificate previously held by Rolls-Royce plc) Trent XWB–75, XWB–79, XWB–79B, and XWB–84 model turbofan engines.

(d) Subject

Joint Aircraft System Component (JASC) Code 7120, Engine Mount Section.

(e) Unsafe Condition

This AD was prompted by analysis by the manufacturer of the low-pressure compressor (LPC) outlet guide vane (OGV) assembly and LPC OGV outer mount ring assembly. The analysis predicted that when the front engine mount is in the fail-safe condition, the most highly stressed LPC OGV outer mount ring assembly has a life that could be substantially less than one shop visit interval. The FAA is issuing this AD to prevent failure of the front engine mount support structure. The unsafe condition, if not addressed, could result in engine separation, reduced control of the airplane, and loss of the airplane.

(f) Compliance

Comply with this AD within the compliance times specified, unless already done.

(g) Required Actions

(1) For affected RRD Trent XWB turbofan engines with 1,700 flight cycles since new (FCSN) or greater as of the effective date of this AD:

(i) Within 300 flight cycles (FCs) after the effective date of this AD, perform a fluorescent penetrant inspection (FPI) of the LPC OGV outer mount ring assembly.

(ii) Use Accomplishment Instructions, paragraph 3.A. or 3.B., as applicable, of Rolls-Royce plc (RR) Alert Non-Modification Service Bulletin (NMSB) Trent XWB 72–AK188, Revision 2, dated December 17, 2019, to perform the FPI of the LPC OGV outer mount ring assembly.

(iii) Thereafter, perform repetitive FPIs of the LPC OGV outer mount ring assembly within 1,000 FCs after the previous inspection.

(2) For affected RRD Trent XWB turbofan engines with fewer than 1,700 FCSN as of the effective date of this AD:

(i) Before exceeding 2,000 FCSN after the effective date of this AD, perform an FPI of the LPC OGV outer mount ring assembly.

(ii) Use Accomplishment Instructions, paragraph 3.A. or 3.B., as applicable, of RR Alert NMSB Trent XWB 72–AK188, Revision 2, dated December 17, 2019, to perform the FPI of LPC OGV outer mount ring assembly.

(iii) Thereafter, perform repetitive FPIs of the LPC OGV outer mount ring assembly within 1,000 FCs after the previous inspection.

(3) If, during any FPI required by paragraph (g)(1) or (2) of this AD, an LPC OGV outer mount ring assembly discrepancy is detected, as defined in the Accomplishment Instructions, paragraph 3.A. or 3.B., of RR Alert NMSB Trent XWB 72–AK188, Revision 2, dated December 17, 2019, repeat the FPI within the interval specified in Accomplishment Instructions, paragraph 3.A. or 3.B., of RR Alert NMSB Trent XWB 72–AK188, Revision 2, dated December 17, 2019.

(4) If, during any FPI required by paragraphs (g)(1) through (3) of this AD, an LPC OGV outer mount ring assembly is rejected as a result of the FPI, as defined in the Accomplishment Instructions, paragraph 3.A. or 3.B., of RR Alert NMSB Trent XWB 72–AK188, Revision 2, dated December 17, 2019:

(i) Before further flight, replace the LPC OGV outer mount ring assembly with a part eligible for installation.

(ii) [Reserved]

(h) Definition

For the purpose of this AD, ''a part eligible for installation'' is a new LPC OGV outer mount ring assembly that has not been previously installed on an engine.

(i) No Reporting Requirement

The reporting requirements in the Accomplishment Instructions, paragraph 3, of RR Alert NMSB Trent XWB 72–AK188, Revision 2, dated December 17, 2019, are not required by this AD.

(j) Credit for Previous Actions

You may take credit for the initial and repetitive FPIs that are required by paragraphs (g)(1) through (3) of this AD if you performed the FPIs before the effective date of this AD using RR Alert NMSB Trent XWB 72–AK188, Revision 1, dated September 20, 2019, or Initial Issue, dated August 13, 2019.

(k) Alternative Methods of Compliance (AMOCs)

(1) The Manager, ECO Branch, FAA, has the authority to approve AMOCs for this AD, if requested using the procedures found in 14 CFR 39.19. In accordance with 14 CFR 39.19, send your request to your principal inspector or local Flight Standards District Office, as appropriate. If sending information directly to the manager of the ECO Branch, send it to the attention of the person identified in paragraph (l)(1) of this AD. You may email your request to: *ANE-AD-AMOC@faa.gov.*

(2) Before using any approved AMOC, notify your appropriate principal inspector, or lacking a principal inspector, the manager of the local flight standards district office/certificate holding district office.

(l) Related Information

(1) For more information about this AD, contact Stephen Elwin, Aerospace Engineer, ECO Branch, FAA, 1200 District Avenue, Burlington, MA 01803; phone: 781–238–7236; fax: 781–238–7199; email: *Stephen.L.Elwin@faa.gov.*

(2) Refer to European Union Aviation Safety Agency (EASA) AD 2019–0234, dated September 19, 2019, for more information. You may examine the EASA AD in the AD docket on the internet at *https://www.regulations.gov* by searching for and locating Docket No. FAA–2019–1109.

(m) Material Incorporated by Reference

(1) The Director of the Federal Register approved the incorporation by reference (IBR) of the service information listed in this paragraph under 5 U.S.C. 552(a) and 1 CFR part 51.

(2) You must use this service information as applicable to do the actions required by this AD, unless the AD specifies otherwise.

(i) Rolls-Royce plc (RR) Alert Non-Modification Service Bulletin Trent XWB 72–AK188, Revision 2, dated December 17, 2019.

(ii) [Reserved]

(3) For RR service information identified in this AD, contact Rolls-Royce Deutschland Ltd & Co KG, Eschenweg 11, 15827 Blankenfelde-Mahlow, Germany; phone: +49 (0) 33 708 6 0; email: *https://www.rolls-royce.com/contact-us.aspx.*

(4) You may view this service information at FAA, Airworthiness Products Section, Operational Safety Branch, 1200 District Avenue, Burlington, MA 01803. For information on the availability of this material at the FAA, call 781–238–7759.

(5) You may view this service information that is incorporated by reference at the National Archives and Records Administration (NARA). For information on the availability of this material at NARA, email: *fedreg.legal@nara.gov,* or go to: *https://www.archives.gov/federal-register/cfr/ibr-locations.html.*

Issued on May 27, 2020.

Gaetano A. Sciortino,

Deputy Director for Strategic Initiatives, Compliance & Airworthiness Division, Aircraft Certification Service.

[FR Doc. 2020–12346 Filed 6–5–20; 8:45 am]

BILLING CODE 4910–13–P

DEPARTMENT OF TRANSPORTATION

Federal Aviation Administration

14 CFR Part 71

[Docket No. FAA–2019–1030; Airspace Docket No. 19–ASW–17]

RIN 2120–AA66

Amendment of Class D and E Airspace; Dallas-Fort Worth, Fort Worth, and Stephenville, TX

AGENCY: Federal Aviation Administration (FAA), DOT.

ACTION: Final rule.

SUMMARY: This action amends the Class D airspace at Fort Worth Spinks Airport, Fort Worth, TX, and the Class E airspace extending upward from 700 feet above the surface at Bourland Field, Fort Worth, TX, and Mesquite Metro Airport, Mesquite, TX, and Stephenville Clark Regional Airport, Stephenville, TX. These actions are the result of airspace reviews caused by the decommissioning of the Glen Rose VHF omnidirectional range (VOR) navigation aid as part of the VOR Minimum Operational Network (MON) Program. The geographic coordinates and names of several airports are also being updated to coincide with the FAA's aeronautical database.

DATES: Effective 0901 UTC, September 10, 2020. The Director of the Federal Register approves this incorporation by reference action under Title 1 Code of Federal Regulations part 51, subject to the annual revision of FAA Order 7400.11 and publication of conforming amendments.

ADDRESSES: FAA Order 7400.11D, Airspace Designations and Reporting Points, and subsequent amendments can be viewed online at *https://www.faa.gov/air_traffic/publications/.* For further information, you can contact the Airspace Policy Group, Federal Aviation Administration, 800 Independence Avenue SW, Washington, DC 20591; telephone: (202) 267–8783. The Order is also available for inspection at the National Archives and Records Administration (NARA). For information on the availability of FAA Order 7400.11D at NARA, email *fedreg.legal@nara.gov* or go to *https://www.archives.gov/federal-register/cfr/ibr-locations.html.*

FOR FURTHER INFORMATION CONTACT: Jeffrey Claypool, Federal Aviation Administration, Operations Support Group, Central Service Center, 10101 Hillwood Parkway, Fort Worth, TX 76177; telephone (817) 222–5711.

SUPPLEMENTARY INFORMATION:

Authority for This Rulemaking

The FAA's authority to issue rules regarding aviation safety is found in Title 49 of the United States Code. Subtitle I, Section 106 describes the authority of the FAA Administrator. Subtitle VII, Aviation Programs, describes in more detail the scope of the agency's authority. This rulemaking is promulgated under the authority described in Subtitle VII, Part A, Subpart I, Section 40103. Under that section, the FAA is charged with prescribing regulations to assign the use of airspace necessary to ensure the safety of aircraft and the efficient use of airspace. This regulation is within the scope of that authority as it amends the Class D airspace at Fort Worth Spinks Airport, Fort Worth, TX, and the Class E airspace extending upward from 700 feet above the surface at Bourland Field, Fort Worth, TX, and Mesquite Metro Airport, Mesquite, TX, which are contained within the Dallas-Fort Worth, TX, airspace legal description, and Stephenville Clark Regional Airport, Stephenville, TX, to support instrument flight rule operations at these airports.

History

The FAA published a notice of proposed rulemaking in the **Federal Register** (85 FR 5343; January 30, 2020) for Docket No. FAA–2019–1030 to amend Class D airspace at Fort Worth Spinks Airport, Fort Worth, TX, and the Class E airspace extending upward from 700 feet above the surface at Bourland Field, Fort Worth, TX, and Mesquite Metro Airport, Mesquite, TX, which are contained within the Dallas-Fort Worth, TX, airspace legal description, and Stephenville Clark Regional Airport, Stephenville, TX. Interested parties were invited to participate in this rulemaking effort by submitting written comments on the proposal to the FAA. No comments were received.

Class D and E airspace designations are published in paragraph 5000 and 6005, respectively, of FAA Order 7400.11D, dated August 8, 2019, and effective September 15, 2019, which is incorporated by reference in 14 CFR 71.1. The Class D and E airspace designations listed in this document will be published subsequently in the Order.

Availability and Summary of Documents for Incorporation by Reference

This document amends FAA Order 7400.11D, Airspace Designations and Reporting Points, dated August 8, 2019, and effective September 15, 2019. FAA Order 7400.11D is publicly available as listed in the **ADDRESSES** section of this document. FAA Order 7400.11D lists Class A, B, C, D, and E airspace areas, air traffic service routes, and reporting points.

The Rule

This amendment to Title 14 Code of Federal Regulations (14 CFR) part 71:

Amends the Class D airspace at Fort Worth Spinks Airport, Fort Worth, TX, by updating the header of the airspace legal description from ''Fort Worth Spinks Airport, TX'' to ''Fort Worth, TX'' to coincide with the FAA's aeronautical database and to comply with FAA Order 7400.2M; updates the geographic coordinates of the airport; and replaces the outdated term ''Airport/Facility Directory'' with ''Chart Supplement;''

Amends the Class E airspace extending upward from 700 feet above the surface for Dallas-Fort Worth, TX, by updating the header of the airspace legal description from ''Dallas/Fort Worth, TX'' to ''Dallas-Fort Worth, TX'' to coincide with the FAA's aeronautical database; updating the name of Dallas-Fort Worth International Airport (previously Dallas/Fort Worth International Airport), Dallas-Fort Worth, TX, to coincide with the FAA's aeronautical database; removing the cities associated with McKinney National Airport, McKinney, TX; Ralph M. Hall/Rockwall Municipal Airport, Rockwall, TX; and Mesquite Metro Airport, Mesquite, TX, contained in the Dallas-Fort Worth, TX, airspace legal

description to comply with FAA Order 7400.2M; removing the Mesquite NDB and the associated extension from the airspace legal description as the associated instrument procedure has been cancelled and the extension is no longer needed; updating the name of the Mesquite Metro: RWY 18–LOC (previously Mesquite Metro ILS Localizer) to coincide with the FAA's aeronautical database; removing the extension south of the airport associated with the Mesquite Metro ILS Localizer; adding an extension 4 miles west and 7.9 miles east of the 001° bearing from the Mesquite Metro: RWY 18–LOC extending from the 6.5-mile radius of the Mesquite Metro Airport to 10 miles north of the Mesquite Metro: RWY 18–LOC; updating the name of Lancaster Regional Airport (previously Lancaster Airport), Lancaster, TX, to coincide with the FAA's aeronautical database and removing the city associated with Lancaster Regional Airport contained in the Dallas-Fort Worth, TX, airspace legal description to comply with FAA Order 7400.2M; removing the city associate with Fort Worth Spinks Airport, Fort Worth, TX, contained in the Dallas-Fort Worth, TX, airspace legal description to comply with FAA Order 7400.2M and updating the geographic coordinates of the airport to coincide with the FAA's aeronautical database; removing the city associated with Cleburne Regional Airport, Cleburne, TX, contained in the Dallas-Fort Worth, TX, airspace legal description to comply with FAA Order 7400.2M; updating the name of Bourland Field (previously Bourland Field Airport), Fort Worth, TX, to coincide with the FAA's aeronautical database and removing the city associated with the airport contained in the Dallas-Fort Worth, TX, airspace legal description to comply with FAA Order 7400.2M; removing the cities associated with Granbury Regional Airport, Granbury, TX, and Parker County Airport, Weatherford, TX, contained in the Dallas-Fort Worth, TX, airspace legal description to comply with FAA Order 7400.2M; removing the city associated with Bridgeport Municipal Airport, Bridgeport, TX, contained in the Dallas-Fort Worth, TX, airspace legal description to comply with FAA Order 7400.2M and updating the geographic coordinates of the airport to coincide with the FAA's aeronautical database; and removing the city associated with the Decatur Municipal Airport, Decatur, TX, contained in the Dallas-Fort Worth, TX, airspace legal description to comply with FAA Order 7400.2M;

And amends the Class E airspace extending upward from 700 feet above the surface at Stephenville Clark Regional Airport (previously Clark Field Municipal Airport), Stephenville, TX, by updating the name and geographic coordinates of the airport to coincide with the FAA's aeronautical database; removing the city associated with the airport in the airspace legal description to comply with FAA Order 7400.2M; and adding an extension 4 miles each side of the 329° bearing from the airport extending from the 6.4-mile radius to 10.5 miles northwest of the airport.

This action is the result of an airspace review caused by the decommissioning of the Glen Rose VHF omnidirectional range (VOR) navigation aid, which provided navigation information for the instrument procedures at these airports, as part of the VOR Minimum Operational Network (MON) Program, and to bring the airspace legal description for Mesquite Metro Airport into compliance with FAA Order 7400.2M.

FAA Order 7400.11, Airspace Designations and Reporting Points, is published yearly and effective on September 15.

Regulatory Notices and Analyses

The FAA has determined that this regulation only involves an established body of technical regulations for which frequent and routine amendments are necessary to keep them operationally current, is non-controversial and unlikely to result in adverse or negative comments. It, therefore: (1) Is not a ''significant regulatory action'' under Executive Order 12866; (2) is not a ''significant rule'' under DOT Regulatory Policies and Procedures (44 FR 11034; February 26, 1979); and (3) does not warrant preparation of a regulatory evaluation as the anticipated impact is so minimal. Since this is a routine matter that only affects air traffic procedures and air navigation, it is certified that this rule, when promulgated, does not have a significant economic impact on a substantial number of small entities under the criteria of the Regulatory Flexibility Act.

Environmental Review

The FAA has determined that this action qualifies for categorical exclusion under the National Environmental Policy Act in accordance with FAA Order 1050.1F, ''Environmental Impacts: Policies and Procedures,'' paragraph 5–6.5.a. This airspace action is not expected to cause any potentially significant environmental impacts, and no extraordinary circumstances exist that warrant preparation of an environmental assessment.

Lists of Subjects in 14 CFR Part 71

Airspace, Incorporation by reference, Navigation (air).

Adoption of the Amendment

In consideration of the foregoing, the Federal Aviation Administration amends 14 CFR part 71 as follows:

PART 71—DESIGNATION OF CLASS A, B, C, D, AND E AIRSPACE AREAS; AIR TRAFFIC SERVICE ROUTES; AND REPORTING POINTS

■ 1. The authority citation for part 71 continues to read as follows:

Authority: 49 U.S.C. 106(f), 106(g); 40103, 40113, 40120; E.O. 10854, 24 FR 9565, 3 CFR, 1959–1963 Comp., p. 389.

§ 71.1 [Amended]

■ 2. The incorporation by reference in 14 CFR 71.1 of FAA Order 7400.11D, Airspace Designations and Reporting Points, dated August 8, 2019, and effective September 15, 2019, is amended as follows:

Paragraph 5000 Class D Airspace

* * * * *

ASW TX D Fort Worth, TX [Amended]

Fort Worth Spinks Airport, TX
(lat. 32°33′55″ N, long. 97°18′30″ W)

That airspace extending upward from the surface up to but not including 3,000 feet MSL within a 4.1-mile radius of Fort Worth Spinks Airport, and within 1 mile each side of the 173° bearing from the airport extending from the 4.1-mile radius to 4.8 miles south of the airport. This Class D airspace area is effective during the specific dates and times established in advance by a Notice to Airmen. The effective dates and times will thereafter be continuously published in the Chart Supplement.

Paragraph 6005 Class E Airspace Areas Extending Upward From 700 Feet or More Above the Surface of the Earth

* * * * *

ASW TX E5 Dallas-Fort Worth, TX [Amended]

Dallas-Fort Worth International Airport, TX
(lat. 32°53′50″ N, long. 97°02′16″ W)
McKinney National Airport, TX
(lat. 33°10′37″ N, long. 96°35′20″ W)
Ralph M. Hall/Rockwall Municipal Airport, TX
(lat. 32°55′50″ N, long. 96°26′08″ W)
Mesquite Metro Airport, TX
(lat. 32°44′49″ N, long. 96°31′50″ W)
Mesquite Metro: RWY 18–LOC
(lat. 32°44′03″ N, long. 96°31′50″ W)
Lancaster Regional Airport, TX
(lat. 32°34′39″ N, long. 96°43′03″ W)
Point of Origin
(lat. 32°51′57″ N, long. 97°01′41″ W)
Fort Worth Spinks Airport, TX
(lat. 32°33′55″ N, long. 97°18′30″ W)
Cleburne Regional Airport, TX
(lat. 32°21′14″ N, long. 97°26′02″ W)

Bourland Field, TX
(lat. 32°34′55″ N, long. 97°35′27″ W)
Granbury Regional Airport, TX
(lat. 32°26′40″ N, long. 97°49′01″ W)
Parker County Airport, TX
(lat. 32°44′47″ N, long. 97°40′57″ W)
Bridgeport Municipal Airport, TX
(lat. 33°10′26″ N, long. 97°49′42″ W)
Decatur Municipal Airport, TX
(lat. 33°15′15″ N, long. 97°34′50″ W)

That airspace extending upward from 700 feet above the surface within a 30-mile radius of Dallas-Fort Worth International Airport, and within a 6.6-mile radius of McKinney National Airport, and within 1.8 miles each side of the 002° bearing from McKinney National Airport extending from the 6.6-mile radius to 9.2 miles north of the airport, and within a 6.3-mile radius of Ralph M. Hall/Rockwall Municipal Airport, and within 1.6 miles each side of the 010° bearing from Ralph M. Hall/Rockwall Municipal Airport extending from the 6.3-mile radius to 10.8 miles north of the airport, and within a 6.5-mile radius of Mesquite Metro Airport, and within 4 miles west and 7.9 miles east of the 001° bearing from the Mesquite Metro: RWY 18–LOC extending from the 6.5-mile radius of the Mesquite Metro Airport to 10 miles north of the Mesquite Metro: RWY 18–LOC, and within a 6.6-mile radius of Lancaster Regional Airport, and within 1.9 miles each side of the 140° bearing from Lancaster Regional Airport extending from the 6.6-mile radius to 9.2 miles southeast of the airport, and within 8 miles northeast and 4 miles southwest of the 144° bearing from the Point of Origin extending from the 30-mile radius of Dallas-Fort Worth International Airport to 35 miles southeast of the Point of Origin, and within a 6.5-mile radius of Fort Worth Spinks Airport, and within 8 miles east and 4 miles west of the 178° bearing from Fort Worth Spinks Airport extending from the 6.5-mile radius to 21 miles south of the airport, and within a 6.9-mile radius of Cleburne Regional Airport, and within 3.6 miles each side of the 292° bearing from the Cleburne Regional Airport extending from the 6.9-mile radius to 12.2 miles northwest of airport, and within a 6.5-mile radius of Bourland Field, and within a 6.3-mile radius of Granbury Regional Airport, and within a 6.3-mile radius of Parker County Airport, and within 8 miles east and 4 miles west of the 177° bearing from Parker County Airport extending from the 6.3-mile radius to 21.4 miles south of the airport, and within a 6.3-mile radius of Bridgeport Municipal Airport, and within 1.6 miles each side of the 040° bearing from Bridgeport Municipal Airport extending from the 6.3-mile radius to 10.6 miles northeast of the airport, and within 4 miles each side of the 001° bearing from Bridgeport Municipal Airport extending from the 6.3-mile radius to 10.7 miles north of the airport, and within a 6.3-mile radius of Decatur Municipal Airport, and within 1.5 miles each side of the 263° bearing from Decatur Municipal Airport extending from the 6.3-mile radius to 9.2 miles west of the airport.

* * * * *

ASW TX E5 Stephenville, TX [Amended]

Stephenville Clark Regional Airport, TX
(lat. 32°12′55″ N, long. 98°10′40″ W)

That airspace extending upward from 700 feet above the surface within a 6.4-mile radius of Stephenville Clark Regional Airport, and within 4 miles each side of the 329° bearing from the airport extending from the 6.4-mile radius to 10.5 miles northwest of the airport.

Issued in Fort Worth, Texas, on May 26, 2020.

Steven T. Phillips,

Acting Manager, Operations Support Group, ATO Central Service Center.

[FR Doc. 2020–11612 Filed 6–5–20; 8:45 am]

BILLING CODE 4910–13–P

DEPARTMENT OF TRANSPORTATION

Federal Aviation Administration

14 CFR Part 71

[Docket No. FAA–2019–0808; Airspace Docket No. 19–ASW–12]

RIN 2120–AA66

Amendment of Class D Airspace and Amendment and Revocation of the Class E Airspace; Multiple Texas Towns

AGENCY: Federal Aviation Administration (FAA), DOT.

ACTION: Final rule.

SUMMARY: This action affects several airports in Texas by amending Class D airspace and Class E surface airspace; revoking Class E airspace designated as an extension to a Class E surface area; amending Class E airspace extending upward from 700 feet above the surface; and removing Class E airspace extending upward from 700 feet above the surface. This action is due to airspace reviews caused by the decommissioning of the Hobby and Temple VHF omnidirectional range (VOR) navigation aids as part of the VOR Minimum Operational Network (MON) Program. The geographic coordinates and names of several airports would also be updated to coincide with the FAA's aeronautical database.

DATES: Effective 0901 UTC, September 10, 2020. The Director of the Federal Register approves this incorporation by reference action under Title 1 Code of Federal Regulations part 51, subject to the annual revision of FAA Order 7400.11 and publication of conforming amendments.

ADDRESSES: FAA Order 7400.11D, Airspace Designations and Reporting Points, and subsequent amendments can be viewed online at *https://www.faa.gov/air_traffic/publications/.* For further information, you can contact the Airspace Policy Group, Federal Aviation Administration, 800 Independence Avenue SW, Washington, DC 20591; telephone: (202) 267–8783. The Order is also available for inspection at the National Archives and Records Administration (NARA). For information on the availability of FAA Order 7400.11D at NARA, email *fedreg.legal@nara.gov* or go to *https://www.archives.gov/federal-register/cfr/ibr-locations.html.*

FOR FURTHER INFORMATION CONTACT: Jeffrey Claypool, Federal Aviation Administration, Operations Support Group, Central Service Center, 10101 Hillwood Parkway, Fort Worth, TX 76177; telephone (817) 222–5711.

SUPPLEMENTARY INFORMATION:

Authority for This Rulemaking

The FAA's authority to issue rules regarding aviation safety is found in Title 49 of the United States Code. Subtitle I, Section 106 describes the authority of the FAA Administrator. Subtitle VII, Aviation Programs, describes in more detail the scope of the agency's authority. This rulemaking is promulgated under the authority described in Subtitle VII, Part A, Subpart I, Section 40103. Under that section, the FAA is charged with prescribing regulations to assign the use of airspace necessary to ensure the safety of aircraft and the efficient use of airspace. This regulation is within the scope of that authority as it amends the Class D airspace at Conroe-North Houston Regional Airport, Conroe, TX; Scholes International Airport at Galveston, Galveston, TX; and Sugar Land Regional Airport, Houston, TX; amends the Class E surface airspace at Conroe-North Houston Regional Airport, Scholes International Airport at Galveston, and Sugar Land Regional Airport; revokes the Class E airspace designated as an extension to a Class E surface area at Draughon-Miller Central Texas Regional Airport, Temple, TX; amends the Class E airspace extending upward from 700 feet above the surface at Chambers County Airport, Anahuac, TX; Scholes International Airport at Galveston; Conroe-North Houston Regional Airport; Texas Gulf Coast Regional Airport, Angleton/Lake Jackson, TX; and Draughon-Miller Central Texas Regional Airport; and removes the Class E airspace extending upward from 700 feet above the surface at Wood No. 2 Airport, Brookshire, TX, and Covey Trails Airport, Fulshear, TX, which are contained within the Houston, TX, airspace legal description,

to support instrument flight rule operations at these airports.

History

The FAA published a notice of proposed rulemaking in the **Federal Register** (84 FR 67886; December 12, 2019) for Docket No. FAA–2019–0808 to amend Class D airspace at Conroe-North Houston Regional Airport, Conroe, TX; Scholes International Airport at Galveston, Galveston, TX; and Sugar Land Regional Airport, Houston, TX; amend Class E surface airspace at Conroe-North Houston Regional Airport, Scholes International Airport at Galveston, and Sugar Land Regional Airport; revoke the Class E airspace designated as an extension to a Class E surface area at Draughon-Miller Central Texas Regional Airport, Temple, TX; amend the Class E airspace extending upward from 700 feet above the surface at Chambers County Airport, Anahuac, TX; Scholes International Airport at Galveston; Conroe-North Houston Regional Airport; Texas Gulf Coast Regional Airport, Angleton/Lake Jackson, TX; and Draughon-Miller Central Texas Regional Airport; and remove Class E airspace extending upward from 700 feet above the surface at Wood No. 2 Airport, Brookshire, TX, and Covey Trails Airport, Fulshear, TX, which are contained within the Houston, TX, airspace legal description. Interested parties were invited to participate in this rulemaking effort by submitting written comments on the proposal to the FAA. No comments were received.

Class D and E airspace designations are published in paragraph 5000, 6002, 6004 and 6005, respectively, of FAA Order 7400.11D, dated August 8, 2019, and effective September 15, 2019, which is incorporated by reference in 14 CFR 71.1. The Class D and E airspace designations listed in this document will be published subsequently in the Order.

Availability and Summary of Documents for Incorporation by Reference

This document amends FAA Order 7400.11D, Airspace Designations and Reporting Points, dated August 8, 2019, and effective September 15, 2019. FAA Order 7400.11D is publicly available as listed in the **ADDRESSES** section of this document. FAA Order 7400.11D lists Class A, B, C, D, and E airspace areas, air traffic service routes, and reporting points.

The Rule

This amendment to Title 14 Code of Federal Regulations (14 CFR) part 71:

Amends the Class D airspace to within a 4.8-mile radius (increased from a 4.1-mile radius) of Conroe-North Houston Regional Airport, Conroe, TX; removes the Navasota VORTAC and Humble VORTAC and the associated exclusion area from the airspace legal description; amends the exclusion area to ''. . . excluding that airspace from lat. 30°25′24″ N, long. 95°22′11″ W to lat. 30°23′32″ N, long. 95°22′51″ W to lat. 30°23′12″ N, long. 95°19′51″ W''; updates the name and geographic coordinates of Conroe-North Houston Regional Airport (previously Lone Star Executive Airport) to coincide with the FAA's aeronautical database; and replaces the outdated term ''Airport/Facility Directory'' with ''Chart Supplement'';

Amends the Class D airspace at Scholes International Airport at Galveston (previously Scholes INTL at Galveston), Galveston, TX, by updating the name of the airport to coincide with the FAA's aeronautical database; corrects the header of the airspace legal description from ''Galveston, Galveston, TX'' to ''Galveston, TX''; and replaces the outdated term ''Airport/Facility Directory'' with ''Chart Supplement'';

Amends the Class D airspace to within a 4.2-mile radius (decreased from a 5.8-mile radius) of Sugar Land Regional Airport, Houston, TX; corrects the header of the airspace legal description from ''Houston Sugar Land, TX'' to ''Houston, TX'' to coincide with the FAA's aeronautical database; removes the city associated with the airport from the airspace legal description to comply with FAA Order 7400.2M, Procedures for Handling Airspace Matters; and removes ''(previously called Airport/Facility Directory)'' as it is no longer needed;

Amends the Class E surface airspace to within a 4.8-mile radius (increased from a 4.1-mile radius) of Conroe-North Houston Regional Airport, Conroe, TX; removes the Navasota VORTAC and Humble VORTAC and the associated exclusion area from the airspace legal description; amends the exclusion area to ''. . . excluding that airspace from lat. 30°25′24″ N, long. 95°22′11″ W to lat. 30°23′32″ N, long. 95°22′51″ W to lat. 30°23′12″ N, long. 95°19′51″ W''; updates the name and geographic coordinates of Conroe-North Houston Regional Airport (previously Lone Star Executive Airport) to coincide with the FAA's aeronautical database; and replaces the outdated term ''Airport/Facility Directory'' with ''Chart Supplement'';

Amends the Class E surface airspace at Scholes International Airport at Galveston (previously Scholes INTL at Galveston), Galveston, TX, by updating the name of the airport to coincide with the FAA's aeronautical database; and replaces the outdated term ''Airport/Facility Directory'' with ''Chart Supplement'';

Amends the Class E surface airspace to within a 4.2-mile radius (decreased from a 5.8-mile radius) of Sugar Land Regional Airport, Houston, TX; corrects the header of the airspace legal description from ''Houston Sugar Land, TX'' to ''Houston, TX'' to coincide with the FAA's aeronautical database; removes the city associated with the airport from the airspace legal description to comply with FAA Order 7400.2M; and removes ''(previously called Airport/Facility Directory)'' as it is no longer needed;

Amends the Class E surface airspace at Draughon-Miller Central Texas Regional Airport, Temple, TX, by removing the city associated with the airport in the airspace legal description to comply with FAA Order 7400.2M;

Removes the Class E airspace area designated as an extension to a Class E surface area at Draughon-Miller Central Texas Regional Airport, Temple, TX, as it is no longer needed;

Amends the Class E airspace area extending upward from 700 feet above the surface to within a 6.1-mile radius (decreased from a 6.3-mile radius) at Chambers County Airport, Anahuac, TX; removes the Anahuac RBN and the associated extension from the airspace legal description; and updates the geographic coordinates of the airport to coincide with the FAA's aeronautical database;

Amends the Class E airspace area extending upward from 700 feet above the surface by removing the Chambers County Airport, Anahuac, TX, and the associated exclusion area from the Houston, TX, airspace legal description as it is no longer needed; to within a 6.6-mile radius (decreased from a 7.6-mile radius) of Scholes International Airport at Galveston, Galveston, TX, which is contained within the Houston, TX, airspace legal description; removes the city associated with the Scholes International Airport from the airspace legal description to comply with FAA Order 7400.2M; removes the Woods No. 2 Airport, Brookshire, TX, and Covey Trails Airport, Fulshear, TX, which are contained within the Houston, TX, airspace legal description from the Houston, TX, airspace legal description, and revokes the associated Class E airspace area extending upward from 700 feet above the surface at these airports as the instrument procedures at these airports have been cancelled and the airspace is no longer required; to

within a 7.3-mile radius (increased from a 6.6-mile radius) of Conroe-North Houston Regional Airport, Conroe, TX, which is contained within the Houston, TX, airspace legal description; and amends the airspace boundary from ''. . . thence from lat. 29°17′04″ N long. 95°00′13″ W . . .'' to ''. . . thence from lat. 29°16′48″ N, long. 94°59′06″ W . . . .''; updates the names of Scholes International Airport at Galveston (previously Scholes International at Galveston) and Conroe-North Houston Regional Airport (previously Lone Star Executive Airport) to coincide with the FAA's aeronautical database; and updates the geographic coordinates of Conroe-North Houston Regional Airport to coincide with the FAA's aeronautical database;

Amends the Class E airspace area extending upward from 700 feet above the surface to within a 6.6-mile radius (decreased from a 6.7-mile radius) of Texas Gulf Coast Regional Airport, Angleton/Lake Jackson, TX; updates the header of the airspace legal description from ''Lake Jackson, TX'' to ''Angleton/Lake Jackson, TX'' to coincide with the FAA's aeronautical database; removes the city associated with the airport from the airspace legal description to comply with FAA Order 7400.2M; and updates the name and geographic coordinates of the Texas Gulf Coast Regional Airport (previously Brazoria County Airport) to coincide with the FAA's aeronautical database;

And amends the Class E airspace area extending upward from 700 feet above the surface at Draughon-Miller Central Texas Regional Airport, Temple, TX, by removing the city associated with the airport to comply with FAA Order 7400.2M; updates the name of the Draughon-Miller Central Texas Regional: RWY 15–LOC (previously Draughon-Miller Central Texas Regional Localizer) to coincide with the FAA's aeronautical database; removes the Temple VOR and the associated extension from the airspace legal description; removes the extension southwest of the airport as it is no longer needed; and amends the extension northwest of the airport to within 4 miles either side of the 343° (previously 336°) bearing of the Draughon-Miller Central Texas Regional: RWY 15–LOC extending from the 6.7-mile radius to 14.2 miles (previously 14.4 miles) northwest of the airport.

These actions are the result of airspace reviews caused by the decommissioning of the Hobby and Temple VORs, which provided navigation information for the instrument procedures at these airports, as part of the VOR MON Program.

FAA Order 7400.11, Airspace Designations and Reporting Points, is published yearly and effective on September 15.

Regulatory Notices and Analyses

The FAA has determined that this regulation only involves an established body of technical regulations for which frequent and routine amendments are necessary to keep them operationally current, is non-controversial and unlikely to result in adverse or negative comments. It, therefore: (1) Is not a ''significant regulatory action'' under Executive Order 12866; (2) is not a ''significant rule'' under DOT Regulatory Policies and Procedures (44 FR 11034; February 26, 1979); and (3) does not warrant preparation of a regulatory evaluation as the anticipated impact is so minimal. Since this is a routine matter that only affects air traffic procedures and air navigation, it is certified that this rule, when promulgated, does not have a significant economic impact on a substantial number of small entities under the criteria of the Regulatory Flexibility Act.

Environmental Review

The FAA has determined that this action qualifies for categorical exclusion under the National Environmental Policy Act in accordance with FAA Order 1050.1F, ''Environmental Impacts: Policies and Procedures,'' paragraph 5–6.5.a. This airspace action is not expected to cause any potentially significant environmental impacts, and no extraordinary circumstances exist that warrant preparation of an environmental assessment.

Lists of Subjects in 14 CFR Part 71

Airspace, Incorporation by reference, Navigation (air).

Adoption of the Amendment

In consideration of the foregoing, the Federal Aviation Administration amends 14 CFR part 71 as follows:

PART 71—DESIGNATION OF CLASS A, B, C, D, AND E AIRSPACE AREAS; AIR TRAFFIC SERVICE ROUTES; AND REPORTING POINTS

■ 1. The authority citation for part 71 continues to read as follows:

Authority: 49 U.S.C. 106(f), 106(g); 40103, 40113, 40120; E.O. 10854, 24 FR 9565, 3 CFR, 1959–1963 Comp., p. 389.

§ 71.1 [Amended]

■ 2. The incorporation by reference in 14 CFR 71.1 of FAA Order 7400.11D, Airspace Designations and Reporting Points, dated August 8, 2019, and effective September 15, 2019, is amended as follows:

Paragraph 5000 Class D Airspace.

* * * * *

ASW TX D Conroe, TX [Amended]

Conroe-North Houston Regional Airport, TX
(Lat. 30°21′12″ N, long. 95°24′54″ W)

That airspace extending upward from the surface to and including 2,700 feet MSL within a 4.8-mile radius of Conroe-North Houston Regional Airport, excluding that airspace from lat. 30°25′24″ N, long. 95°22′11″ W to lat. 30°23′32″ N, long. 95°22′51″ W to lat. 30°23′12″ N, long. 95°19′51″ W. This Class D airspace area is effective during the specific dates and times established in advance by a Notice to Airmen. The effective date and time will thereafter be continuously published in the Chart Supplement.

* * * * *

ASW TX D Galveston, TX [Amended]

Scholes International Airport at Galveston, TX
(Lat. 29°15′55″ N, long. 94°51′38″ W)

That airspace extending upward from the surface up to but not including 2,500 feet MSL within a 4.1-mile radius of Scholes International Airport at Galveston. This Class D airspace area is effective during the specific dates and times established in advance by a Notice to Airmen. The effective date and time will thereafter be continuously published in the Chart Supplement.

* * * * *

ASW TX D Houston, TX [Amended]

Sugar Land Regional Airport, TX
(Lat. 29°37′20″ N, long. 95°39′24″ W)

That airspace extending upward from the surface to and including 2,600 feet MSL within a 4.2-mile radius of Sugar Land Regional Airport. This Class D airspace area is effective during the specific dates and times established in advance by a Notice to Airmen. The effective date and time will thereafter be continuously published in the Chart Supplement.

Paragraph 6002 Class E Airspace Areas Designated as Surface Areas.

* * * * *

ASW TX E2 Conroe, TX [Amended]

Conroe-North Houston Regional Airport, TX
(Lat. 30°21′12″ N, long. 95°24′54″ W)

That airspace extending upward from the surface to and including 2,700 feet MSL within a 4.8-mile radius of Conroe-North Houston Regional Airport, excluding that airspace from lat. 30°25′24″ N, long. 95°22′11″ W to lat. 30°23′32″ N, long. 95°22′51″ W to lat. 30°23′12″ N, long. 95°19′51″ W. This Class E airspace area is effective during the specific dates and times established in advance by a Notice to Airmen. The effective date and time will thereafter be continuously published in the Chart Supplement.

* * * * *

ASW TX E2 Galveston, TX [Amended]

Scholes International Airport at Galveston, TX
(Lat. 29°15′55″ N, long. 94°51′38″ W)

That airspace extending upward from the surface up to but not including 2,500 feet MSL within a 4.1-mile radius of Scholes International Airport at Galveston. This Class E airspace area is effective during the specific dates and times established in advance by a Notice to Airmen. The effective date and time will thereafter be continuously published in the Chart Supplement.

* * * * *

ASW TX E2 Houston, TX [Amended]

Sugar Land Regional Airport, TX
(Lat. 29°37′20″ N, long. 95°39′24″ W)

That airspace extending upward from the surface to and including 2,600 feet MSL within a 4.2-mile radius of Sugar Land Regional Airport. This Class E airspace area is effective during the specific dates and times established in advance by a Notice to Airmen. The effective date and time will thereafter be continuously published in the Chart Supplement.

* * * * *

ASW TX E2 Temple, TX [Amended]

Draughon-Miller Central Texas Regional Airport, TX
(Lat. 31°09′07″ N, long. 97°24′28″ W)

Within a 4.2-mile radius of Draughon-Miller Central Texas Regional Airport. This Class E airspace area is effective during the specific dates and times established in advance by a Notice to Airmen. The effective date and time will thereafter be continuously published in the Chart Supplement.

Paragraph 6004 Class E Airspace Areas Designated as an Extension to a Class D or Class E Surface Area.

* * * * *

ASW TX E4 Temple, TX [Removed]

Paragraph 6005 Class E Airspace Areas Extending Upward From 700 Feet or More Above the Surface of the Earth.

* * * * *

ASW TX E5 Anahuac, TX [Amended]

Chambers County Airport, TX
(Lat. 29°46′11″ N, long. 94°39′49″ W)

That airspace extending upward from 700 feet above the surface within a 6.1-mile radius of Chambers County Airport.

* * * * *

ASW TX E5 Houston, TX [Amended]

Point of Origin
(Lat. 30°35′01″ N, long. 95°28′01″ W)
Scholes International Airport at Galveston, TX
(Lat. 29°15′55″ N, long. 94°51′38″ W)
Conroe-North Houston Regional Airport, TX
(Lat. 30°21′12″ N, long. 95°24′54″ W)

That airspace extending upward from 700 feet above the surface within an area bounded by a line beginning at the Point of Origin to lat. 29°45′00″ N, long. 94°44′01″ W; thence from lat. 29°45′00″ N, long. 94°44′01″ W to a point of tangency with the east arc of a 6.6-mile radius of Scholes International Airport at Galveston, and within a 6.6-mile radius of Scholes International Airport at Galveston; thence from lat. 29°16′48″ N, long. 94°59′06″ W; to lat. 29°30′01″ N, long. 95°54′01″ W; to lat. 30°26′01″ N, long. 95°42′01″ W; to the Point of Origin, and within a 7.3-mile radius of Conroe-North Houston Regional Airport.

* * * * *

ASW TX E5 Angleton/Lake Jackson, TX [Amended]

Texas Gulf Coast Regional Airport, TX
(Lat. 29°06′31″ N, long. 95°27′44″ W)

That airspace extending upward from 700 feet above the surface within a 6.6-mile radius of Texas Gulf Coast Regional Airport.

* * * * *

ASW TX E5 Temple, TX [Amended]

Draughon-Miller Central Texas Regional Airport, TX
(Lat. 31°09′07″ N, long. 97°24′28″ W)
Draughon-Miller Central Texas Regional: RWY 15–LOC
(Lat. 31°08′20″ N, long. 97°24′16″ W)

That airspace extending upward from 700 feet above the surface within a 6.7-mile radius of Draughon-Miller Central Texas Regional Airport, and within 4 miles either side of the 343° bearing of the Draughon-Miller Central Texas Regional: RWY 15–LOC extending from the 6.7-mile radius to 14.2 miles northwest of the airport.

Issued in Fort Worth, Texas, on May 26, 2020.

Steven T. Phillips,

Acting Manager, Operations Support Group, ATO Central Service Center.

[FR Doc. 2020–11610 Filed 6–5–20; 8:45 am]

BILLING CODE 4910–13–P

DEPARTMENT OF JUSTICE

Drug Enforcement Administration

21 CFR Part 1308

[Docket No. DEA–510]

Listing of Ethylone in Schedule I of Controlled Substances and Assignment of an Administration Controlled Substances Code Number

AGENCY: Drug Enforcement Administration, Department of Justice.

ACTION: Final rule.

SUMMARY: This is a final rule issued by the Drug Enforcement Administration (DEA) establishing a specific listing and administration controlled substances code number for ethylone (also known as 1-(1,3-benzodioxol-5-yl)-2-(ethylamino)propan-1-one; 3,4-methylenedioxy-*N*-ethylcathinone; bk-MDEA; MDEC) in schedule I of the Controlled Substances Act (CSA).

DATES: Effective June 8, 2020.

FOR FURTHER INFORMATION CONTACT: Scott A. Brinks, Regulatory Drafting and Policy Support Section, Diversion Control Division, Drug Enforcement Administration; Mailing Address: 8701 Morrissette Drive, Springfield, Virginia 22152; Telephone: (571) 362–3261.

SUPPLEMENTARY INFORMATION:

Ethylone Control

Ethylone (1-(1,3-benzodioxol-5-yl)-2-(ethylamino)propan-1-one; 3,4-methylenedioxy-*N*-ethylcathinone; bk-MDEA; MDEC) is a chemical substance which is structurally related to butylone. Butylone is listed as a hallucinogenic substance in schedule I at 21 CFR 1308.11(d)(62), which includes ''any of its salts, isomers, and salts of isomers whenever the existence of such salts, isomers, and salts of isomers is possible,'' and for which ''the term 'isomer' includes the optical, position and geometric isomers.'' When compared to the chemical structure of butylone, ethylone meets the statutory definition of a positional isomer in 21 CFR 1300.01(b). Both butylone and ethylone possess the same molecular formula, core structure, and have the same functional groups. They only differ from one another by a rearrangement of an alkyl moiety between functional groups. Accordingly, under 21 CFR 1308.11(d), ethylone has been and continues to be a schedule I controlled substance.

DEA's Authority To Control Ethylone

This rule is prompted by a letter dated April 21, 2017, in which the United States Government was informed by the Secretary-General of the United Nations that ethylone has been added to Schedule II of the Convention on Psychotropic Substances of 1971 (1971 Convention). This letter was prompted by a decision at the 60th Session of the Commission on Narcotic Drugs in March 2017 to schedule ethylone under Schedule II of the 1971 Convention. Preceding this decision, the Food and Drug Administration (FDA), on behalf of the Secretary of Health and Human Services (HHS), published notice in the **Federal Register** with an opportunity to submit domestic information and opportunity to comment on this action, 81 FR 64162 and 82 FR 3326. In both instances, FDA noted that ethylone was already controlled as a positional isomer of butylone, and that no additional controls would be necessary. However, as a signatory Member State to the 1971 Convention, the United States is obligated to control ethylone under its national drug control legislation, *i.e.,* the CSA.

Ethylone is currently controlled domestically in schedule I of the CSA as a positional isomer of butylone, and, as such, all regulations and criminal sanctions applicable to schedule I substances have been and remain applicable to ethylone. Drugs controlled in schedule I of the CSA satisfy and exceed the required domestic controls of Schedule II under Article 2 of the 1971 Convention. Article 23 of the 1971 Convention allows for adoption of stricter domestic measures of control than those required under the Convention, if those measures are desirable or necessary for the protection of the public health and welfare.

This action has the net effect of establishing a specific listing for ethylone in schedule I of the CSA and assigns an Administration Controlled Substances Number for the substance. This action will allow DEA to establish an aggregate production quota and grant individual manufacturing and procurement quotas to DEA registered manufacturers of ethylone who had previously been granted individual quotas for such purposes under drug code for butylone.

Regulatory Analyses

Administrative Procedure Act

An agency may find good cause to exempt a rule from certain provisions of the Administrative Procedure Act (5 U.S.C. 553), including notice of proposed rulemaking and the opportunity for public comment, if it is determined to be unnecessary, impracticable, or contrary to the public interest. This rule is promulgated in order to comply with international treaty obligations, and because ethylone is currently controlled in schedule I and has no accepted medical use, DEA has no discretion with respect to these changes.

Pursuant to 5 U.S.C. 553(b)(B), DEA finds that notice and comment rulemaking is unnecessary and that good cause exists to dispense with these procedures because the inclusion of ethylone and its Administration Controlled Substances Code Number in the list of schedule I substances in 21 CFR 1308.11(b) is ''a minor or merely technical amendment in which the public is not particularly interested.'' *National Nutritional Foods Ass'n* v. *Kennedy,* 572 F.2d 377, 385 (2d Cir. 1978) (quoting S. Rep. No. 79–752, at 200 (1945)). *See also Utility Solid Waste Activities Group* v. *E.P.A.,* 236 F.3d 749, 755 (D.C. Cir. 2001) (the ''unnecessary'' prong ''is confined to those situations in which the administrative rule is a routine determination, insignificant in nature and impact, and inconsequential to the industry and public'') (int. quotations and citation omitted). This rule is a ''technical amendment'' to 21 CFR 1308.11(b) as it is ''insignificant in nature and impact, and inconsequential to the industry and public.'' Therefore, publishing a notice of proposed rulemaking and soliciting public comment are unnecessary.

In addition, because ethylone is already subject to domestic control under schedule I as a positional isomer of butylone and no additional requirements are being imposed through this action, DEA finds good cause exists to make this rule effective immediately upon publication in accordance with 5 U.S.C. 553(d)(3). As ethylone is already subject to domestic control under schedule I and no additional requirements are being imposed through this action, DEA believes that delaying the effective date of this rule could cause confusion regarding the regulatory status of ethylone. Ethylone is currently controlled as a schedule I controlled substance, and this level of control does not change with this rulemaking.

Executive Order 12866, 13563, and 13771, Regulatory Planning and Review, Improving Regulation and Regulatory Review, and Reducing Regulation and Controlling Regulatory Costs

This regulation has been drafted and reviewed in accordance with the principles of Executive Orders (E.O.) 12866 and 13563. This rule is not a significant regulatory action under E.O. 12866. Ethylone has been controlled in the United States as a positional isomer of a schedule I hallucinogen. In this final rule, DEA is merely amending its regulations to formally list ethylone in schedule I and to assign the Administration Controlled Substances Code Number 7547 to the substance. Listing ethylone and its Administration Controlled Substances Code Number will not alter the status of ethylone as a schedule I controlled substance. Accordingly, this rule has not been reviewed by the Office of Management and Budget (OMB).

Because this final rule is not significant under E.O. 12866, it is not subject to the requirements of E.O. 13771.[1]

Executive Order 12988, Civil Justice Reform

This regulation meets the applicable standards set forth in sections 3(a) and 3(b)(2) of E.O. 12988 Civil Justice Reform to eliminate drafting errors and ambiguity, provide a clear legal standard for affected conduct, and promote simplification and burden reduction.

Executive Order 13132, Federalism

This rulemaking does not have federalism implications warranting the application of E.O. 13132. The rule does not have substantial direct effects on the States, on the relationship between the national government and the States, or on the distribution of power and responsibilities among the various levels of government.

Executive Order 13175, Consultation and Coordination With Indian Tribal Governments

This rule does not have tribal implications warranting the application of E.O. 13175. It does not have substantial direct effects on one or more Indian tribes, on the relationship between the Federal government and Indian tribes, or on the distribution of power and responsibilities between the Federal government and Indian tribes.

Regulatory Flexibility Act

The Regulatory Flexibility Act (RFA) (5 U.S.C. 601–612) applies to rules that are subject to notice and comment under section 553(b) of the APA or other laws. As explained above, the DEA determined that there was good cause to exempt this final rule from notice and comment. Consequently, the RFA does not apply to this interim final rule.

Paperwork Reduction Act of 1995

This action does not impose a new collection of information requirement under the Paperwork Reduction Act of 1995. 44 U.S.C. 3501–3521. This action would not impose recordkeeping or reporting requirements on State or local governments, individuals, businesses, or organizations. An agency may not conduct or sponsor, and a person is not required to respond to, a collection of information unless it displays a currently valid OMB control number.

Unfunded Mandates Reform Act of 1995

In accordance with the Unfunded Mandates Reform Act (UMRA) of 1995, 2 U.S.C. 1532, DEA has determined that this action would not result in any Federal mandate that may result ''in the expenditure by State, local, and tribal governments, in the aggregate, or by the private sector, of $100 million or more (adjusted for inflation) in any one year.'' Therefore, neither a Small Government Agency Plan nor any other action is required under UMRA of 1995.

[1] Office of Mgmt. & Budget, Exec. Office of The President, Interim Guidance Implementing Section 2 of the Executive Order of January 30, 2017 Titled ''Reducing Regulation and Controlling Regulatory Costs'' (Feb. 2, 2017).

Congressional Review Act

This rule is not a major rule as defined by section 804 of the Congressional Review Act (CRA), 5 U.S.C. 804. However, pursuant to the CRA, DEA is submitting a copy of this rule to both Houses of Congress and to the Comptroller General.

List of Subjects in 21 CFR Part 1308

Administrative practice and procedure, Drug traffic control, Reporting and recordkeeping requirements.

For the reasons set out above, 21 CFR part 1308 is amended as follows:

PART 1308—SCHEDULES OF CONTROLLED SUBSTANCES

■ 1. The authority citation for part 1308 continues to read as follows:

Authority: 21 U.S.C. 811, 812, 871(b), 956(b), unless otherwise noted.

■ 2. Amend § 1308.11 by adding paragraph (d)(80), to read as follows:

§ 1308.11 Schedule I.

* * * * *

(d) * * *

(80) 1-(1,3-benzodioxol-5-yl)-2-(ethylamino)propan-1-one (ethylone) 7547.

* * * * *

Uttam Dhillon,

Acting Administrator.

[FR Doc. 2020–10295 Filed 6–5–20; 8:45 am]

BILLING CODE 4410–09–P

DEPARTMENT OF LABOR

Wage and Hour Division

29 CFR Part 541

RIN 1235–AA20

Defining and Delimiting the Exemptions for Executive, Administrative, Professional, Outside Sales and Computer Employees; Correction

AGENCY: Wage and Hour Division, Department of Labor.

ACTION: Final rule; technical correction and correcting amendments.

SUMMARY: On September 27, 2019, the Department of Labor published in the **Federal Register** a final rule updating and revising the regulations issued under the Fair Labor Standards Act implementing the exemptions from minimum wage and overtime pay requirements for executive, administrative, professional, outside sales, and computer employees. This final rule was effective on January 1, 2020. Through publication of this document, the Department corrects certain regulatory text.

DATES: This rule is effective June 8, 2020.

FOR FURTHER INFORMATION CONTACT: Amy DeBisschop, Director, Division of Regulations, Legislation, and Interpretation, Wage and Hour Division, U.S. Department of Labor, Room S–3502, 200 Constitution Avenue NW, Washington, DC 20210, telephone: (202) 693–0406 (this is not a toll-free number).

SUPPLEMENTARY INFORMATION: The Department of Labor published a final rule in the **Federal Register** on September 27, 2019 titled, Defining and Delimiting the Exemptions for Executive, Administrative, Professional, Outside Sales and Computer Employees. 84 FR 51230. Due to an error in the instructions for amending 29 CFR 541.601 (Highly compensated employees), the final rule erroneously deleted regulatory text of § 541.601(b)(3) and (4) (page 51307), when the Department's intent was only to revise § 541.601(b)(1) and (2), but to leave paragraphs (b)(3) and (4) unchanged. The Department restores these two provisions in this correction. Further, the Department here deletes § 541.607 (Automatic updates to amounts of salary and compensation required), which should have been deleted in the final rule. In the Notice of Proposed Rulemaking, the Department proposed to delete § 541.607, while affirming its intention to propose increasing the earnings thresholds every four years. 84 FR 10900, 10915 (Mar. 22, 2019). In the final rule the Department declined to finalize its proposal to propose updates quadrennially, and instead reaffirmed its commitment to better implement Congress's instruction to define and delimit the EAP exemptions ''from time to time'' through regulations. 84 FR 51252 (citing 29 U.S.C. 213(a)(1)). However, due to an error, the Department failed to remove and reserve the regulatory text section in the instructions. The Department corrects these errors with this action.

Section 553(b)(3) of the Administrative Procedure Act (APA) provides that an agency is not required to publish a notice of proposed rulemaking and solicit public comments when the agency has good cause to find that doing so would be ''impracticable, unnecessary, or contrary to the public interest.'' 5 U.S.C. 553(b)(3). The Department finds that good cause exists to dispense with the notice and public comment procedures for this correction to its regulations, as it concludes that such procedures are unnecessary because this rule merely corrects inadvertent errors in regulatory instructions. Section 553(d) of the APA also provides that substantive rules should take effect not less than 30 days after the date they are published unless ''otherwise provided by the agency for good cause found[.]'' 5 U.S.C. 553(d)(3). Since this rule is a correction that does not change the substance of the Department's regulations, the Department finds that it is unnecessary to delay the effective date of the rule. Therefore, the Department is issuing this correction as a final rule effective on the date of publication.

List of Subjects in 29 CFR Part 541

Labor, Minimum wages, Overtime pay, Salaries, Teachers, Wages.

For the reasons set out in the preamble, the Department of Labor corrects 29 CFR part 541 by making the following correcting amendments:

PART 541—DEFINING AND DELIMITING THE EXEMPTIONS FOR EXECUTIVE, ADMINISTRATIVE, PROFESSIONAL, COMPUTER AND OUTSIDE SALES EMPLOYEES

■ 1. The authority citation for part 541 continues to read as follows:

Authority: 29 U.S.C. 213; Pub. L. 101–583, 104 Stat. 2871; Reorganization Plan No. 6 of 1950 (3 CFR, 1945–53 Comp., p. 1004); Secretary's Order 01–2014 (Dec. 19, 2014), 79 FR 77527 (Dec. 24, 2014).

■ 2. In § 541.601, add paragraphs (b)(3) and (4) to read as follows:

§ 541.601 Highly compensated employees.

* * * * *

(b) * * *

(3) An employee who does not work a full year for the employer, either because the employee is newly hired after the beginning of the year or ends the employment before the end of the year, may qualify for exemption under this section if the employee receives a *pro rata* portion of the minimum amount established in paragraph (a) of this section, based upon the number of weeks that the employee will be or has been employed. An employer may make one final payment as under paragraph (b)(2) of this section within one month after the end of employment.

(4) The employer may utilize any 52-week period as the year, such as a calendar year, a fiscal year, or an anniversary of hire year. If the employer does not identify some other year period

in advance, the calendar year will apply.

* * * * *

§ 541.607 [Removed and Reserved]

■ 3. Remove and reserve § 541.607.

Signed at Washington, DC, this 29th day of May, 2020.

Cheryl M. Stanton,

Administrator, Wage and Hour Division.

[FR Doc. 2020–11979 Filed 6–5–20; 8:45 am]

BILLING CODE 4510–27–P

DEPARTMENT OF LABOR

Wage and Hour Division

29 CFR Part 778

RIN 1235–AA31

Fluctuating Workweek Method of Computing Overtime

AGENCY: Wage and Hour Division, Department of Labor.

ACTION: Final rule.

SUMMARY: The Department of Labor (the Department) is revising its regulation for computing overtime compensation of salaried nonexempt employees who work hours that vary each week (fluctuating workweek) under the Fair Labor Standards Act (FLSA or the Act). The final rule clarifies that payments in addition to the fixed salary are compatible with the use of the fluctuating workweek method of compensation, and that such payments must be included in the calculation of the regular rate as appropriate under the Act. The Department also adds examples and makes minor revisions to make the rule easier to understand.

DATES: This final rule is effective on August 7, 2020.

FOR FURTHER INFORMATION CONTACT: Amy DeBisschop, Director, Division of Regulations, Legislation, and Interpretation, Wage and Hour Division (WHD), U.S. Department of Labor, Room S–3502, 200 Constitution Avenue NW, Washington, DC 20210; telephone: (202) 693–0406 (this is not a toll-free number). Copies of this final rule may be obtained in alternative formats (Large Print, Braille, Audio Tape, or Disc), upon request, by calling (202) 693–0675 (this is not a toll-free number). TTY/TDD callers may dial toll-free 1–877–889–5627 to obtain information or request materials in alternative formats.

Questions of interpretation and/or enforcement of the agency's regulations may be directed to the nearest WHD district office. Locate the nearest office by calling WHD's toll-free help line at (866) 4US–WAGE ((866) 487–9243) between 8 a.m. and 5 p.m. in your local time zone, or log onto WHD's website for a nationwide listing of WHD district and area offices at *http://www.dol.gov/whd/america2.htm.*

SUPPLEMENTARY INFORMATION:

I. Executive Summary

Section 7(a) of the FLSA requires employers to pay their nonexempt employees overtime pay of at least ''one and one-half times the regular rate at which [the employee] is employed'' for all hours worked in excess of 40 in a workweek. 29 U.S.C. 207(a). In other words, for each hour over 40 an employee works in a workweek, the employee is entitled to straight-time compensation at the regular rate and an additional 50 percent of the regular rate for that hour. Where an employee receives a fixed salary for fluctuating hours, an employer may use the ''fluctuating workweek method'' to compute overtime compensation owed, if certain conditions are met. 29 CFR 778.114.

Under current 29 CFR 778.114, an employer may use the fluctuating workweek method if the employee works fluctuating hours from week to week and receives, pursuant to a clear and mutual understanding with the employer, a fixed salary as straight time compensation for whatever hours the employee is called upon to work in a workweek, whether few or many. 29 CFR 778.114(a). In such cases, because the salary ''compensate[s] the employee at straight time rates for whatever hours are worked in the workweek,'' the regular rate ''is determined by dividing the number of hours worked in the workweek into the amount of the salary,'' and an employer satisfies the overtime pay requirement of section 7(a) of the FLSA if it compensates the employee, in addition to the salary amount, at a rate of at least one-half of the regular rate of pay for the hours worked each overtime hour. 29 CFR 778.114(a). Because the employee's hours of work fluctuate from week to week, the regular rate must be determined separately each week based on the number of hours actually worked each week. *Id.*

The payment of additional bonus and premium payments on top of the fixed salary to employees compensated under the fluctuating workweek method has presented challenges to employers and the courts alike, as set forth in more detail below. In the Notice of Proposed Rulemaking (NPRM), the Department proposed to clarify that bonus payments, premium payments, and other additional pay are consistent with the use of the fluctuating workweek method of compensation. *See* 84 FR 59590, 59591 (Nov. 5, 2019). Such supplemental payments and the fixed salary provide straight-time compensation for all hours worked and the regular rate is determined by dividing that amount by the hours worked in the workweek. Additional bonuses or premium payments must be included in the calculation of the regular rate unless they may be excluded under FLSA sections 7(e)(1)–(8). *See* 29 U.S.C. 207(e)(1)–(8).

The Department proposed a similar clarification through an NPRM in 2008. *See* 73 FR 43654, 43662, 43669–70 (July 28, 2008). However, the final rule issued in 2011 did not adopt this proposal because the Department, at the time, believed that courts had ''not been unduly challenged'' in applying the current regulatory text, that the proposed clarification ''would have been inconsistent'' with the Supreme Court's decision in *Overnight Motor Transportation Co.* v. *Missel,* 316 U.S. 572 (1942), and that the proposed clarifying language ''may create an incentive'' for employers ''to require employees to work long hours.'' 76 FR 18832, 18848–50 (Apr. 5, 2011). The preamble to the 2011 final rule further stated, for the first time in rulemaking by the Department, that all straight-time bonus and premium payments were incompatible with the fluctuating workweek method, while maintaining that the preamble ''restore[d] the current rule.'' The decision in that rulemaking not to make any substantive changes to the regulatory text, however, caused courts to interpret the 2011 final rule in different ways and to reach inconsistent holdings based on a judicially-crafted distinction between certain types of bonuses that the Department has never recognized.

As explained below, the Department has considered anew the need for a clarification, particularly in light of the 2011 final rule and its interpretation by courts, now finds the reasons articulated in 2011 to be unpersuasive, and is therefore finalizing revisions that are substantially similar to those initially proposed in 2008. Specifically, the Department is adding language to § 778.114(a) clarifying that bonuses, premium payments, and other additional pay of any kind are compatible with the use of the fluctuating workweek method of compensation. The Department is also adding examples to § 778.114(b) to illustrate the fluctuating workweek method of calculating overtime where an employee is paid (1) a nightshift differential, (2) a productivity bonus in

addition to a fixed salary, and (3) premium pay for weekend work. The Department is further making non-substantive revisions to § 778.114(a) and (c) that were not proposed in the 2008 NPRM to enhance clarity. Specifically, revised § 778.114(a) will now list each of the requirements for using the fluctuating workweek method, while duplicative text is being removed from revised § 778.114(c). Finally, the Department is changing the title of the regulation from ''Fixed salary for fluctuating hours'' to ''Fluctuating Workweek Method of Computing Overtime.''

The Department also believes that this rule will allow employers and employees to better utilize flexible work schedules. This is especially important as workers return to work following the COVID–19 pandemic. Some employers are likely to promote social distancing in the workplace by having their employees adopt variable work schedules, possibly staggering their start and end times for the day. This rule will make it easier for employers and employees to agree to unique scheduling arrangements while allowing employees to retain access to the bonuses and premiums they would otherwise earn.

This final rule is an Executive Order (E.O.) 13771 deregulatory action. Details on the estimated reduced burdens and cost savings of this final rule can be found in the rule's economic analysis.

Pursuant to the Congressional Review Act (5 U.S.C. 801 *et seq.*), the Office of Information and Regulatory Affairs has designated this rule as a ''major rule'' as defined by 5 U.S.C. 804(2).

II. Background

A. Principles of Computing Overtime Pay Based on the Regular Rate

Section 7(a) of the FLSA requires employers to pay their nonexempt employees overtime premium pay of at least ''one and one-half times the regular rate at which [the employee] is employed'' for all hours worked in excess of 40 in a workweek. 29 U.S.C. 207(a). The regular rate is computed for each workweek and is defined as ''all remuneration for employment,'' save for eight statutory exclusions, divided by the number of hours worked. 29 U.S.C. 207(e); *see also Bay Ridge Operating Co.* v. *Aaron,* 334 U.S. 446, 458 (1948) (stating that the ''regular rate must be computed by dividing the total number of hours worked into the total compensation received'').[1] For each hour over 40 an employee works in a workweek, the employee is entitled to straight time compensation at the regular rate and an additional 50 percent of the regular rate for that hour. *See, e.g., Walling* v. *Youngerman-Reynolds Hardwood Co.,* 325 U.S. 419, 423–24 (1945). Dividing non-excludable remuneration by hours worked is the only proper method to compute the regular rate and the Department's regulations at §§ 778.110–778.115 ''give some examples of the proper method of determining the regular rate of pay in particular instances.'' 29 CFR 778.109.[2]

One of the examples is § 778.114, which concerns instances where the employee is paid a fixed salary that is understood to be compensation for a variable number of hours worked each week, whether few or many, as opposed to a specific number of hours. The regular rate equals the quotient of the weekly salary and the number of hours worked and necessarily changes as the number of hours vary week to week. For each overtime hour worked, the employee is entitled to straight-time pay plus an additional 50 percent of the regular rate as an overtime premium. Because the weekly salary is compensation for all hours worked in a workweek, the employee would have already received straight-time pay for any overtime hours worked, so he or she is entitled to additional compensation at one-half of the regular rate for overtime hours. This method of computing overtime pay is the subject of this rulemaking and is known as the fluctuating workweek method.

The fluctuating workweek method is not the only such example where additional overtime compensation is properly computed as one-half the regular rate because the straight time portion of the required ''one and one-half times the regular rate'' has already been paid. This method of computation is also appropriate where an employee is compensated through piece rate, job rate, or day rate arrangements.

Section 778.110 concerns instances where the employee is paid an hourly wage. If an hourly wage were the sole component of compensation, the regular rate would simply be the hourly wage. 29 CFR 778.110(a). Compensation for each overtime hour would equal one times the hourly rate as straight-time pay plus an additional one-half times the hourly rate, for a total of ''one and one-half times the regular rate.'' 29 U.S.C. 207(a).

Section 778.111 concerns instances where the employee is paid on a piece rate basis plus an hourly premium for time spent waiting. In § 778.111(a)'s scenario, the regular rate for each week is computed by adding piece rate compensation to the total waiting premium and then dividing that sum by the number of hours worked. This constitutes the employee's straight time pay and ''[o]nly additional half-time pay is required'' for overtime hours worked. 29 CFR 778.111.[3]

Section 778.112 concerns instances where the employee is paid a flat amount for a day's work or a specific job, regardless of how many hours were actually worked on a particular day or for a particular job. The regular rate is computed as the sum of all day rate or job rate compensation in a workweek divided by the total number of hours worked. As with piece rate pay, this constitutes straight-time pay for all hours worked. Accordingly, the employee ''is then entitled to extra half-time pay at this [regular] rate for all hours worked in excess of 40 in the workweek.'' 29 CFR 778.112.

Section 778.113 concerns instances where the employee is paid a salary for a specific number of hours each week. In this scenario, the salary can be expressed as a constant hourly rate equal to the salary amount divided by the specific number of hours that the salary is intended to compensate.[4] Since the salary covers a specific number of hours, and not all hours in a workweek, it would not cover straight-time compensation for hours in excess of that specific number, including any such

[1] The preamble to the Department's 2019 rulemaking concerning ''Regular Rate under the Fair Labor Standards Act'' discusses in greater detail the legislative and regulatory history of the regular rate. *See* 84 FR 68736, 68737–39 (Dec. 16, 2019).

[2] Total non-excludable remuneration is divided by all hours worked to determine the regular rate where all hours worked have been compensated. This will always be the case under the fluctuating workweek method because the fixed salary covers all hours worked and, when combined with non-excludable bonuses and premiums, constitutes all straight time pay. When an employee is paid a salary for fixed hours, however, the salary is divided by the hours that it covers, not the total hours worked, and additional straight time is due for any additional hours, as well as any overtime premium. 29 CFR 778.113. Similarly, if an employee who is paid hourly, for example, has worked uncompensated hours, the uncompensated hours are not included in determining the regular rate and the employee is owed their regular rate for the uncompensated hours as well as any overtime premium. *See* 29 CFR 778.109 (regular rate is non-excludable remuneration divided ''by the total number of hours actually worked by [the employee] in that workweek *for which such compensation was paid*'') (emphasis added).

[3] Section 778.111(b) further provides that, for any workweek in which a piece rate employee receives an hourly guarantee in lieu of the piece rate compensation, the regular rate is equal to the guaranteed hourly rate.

[4] If the salary covers a period longer than a week, an hourly rate can still be computed by dividing the salary by the number of hours covered in the period, whether that is a month, a year, or something else.

overtime hours. Accordingly, the employee must receive straight-time pay at the regular rate in addition to one-half of the regular rate as overtime premium for each such overtime hour.

Finally, § 778.115 concerns instances where an employee receives straight-time pay at multiple different rates in the same workweek. In such cases, the ''regular rate for that week is the weighted average of such rates'' and the employee is entitled to additional half-time for overtime hours. 29 CFR 778.115.[5]

These examples all apply the same fundamental principle for computing the regular rate: The regular rate for each workweek is calculated by dividing non-excludable remuneration by the number of hours worked. They also apply the same fundamental principle for computing overtime pay: Overtime pay for each hour worked above 40 is equal to straight-time pay for that hour plus an additional 50 percent of the regular rate as overtime premium. With these examples and principles in mind, the Department turns to the background specific to the fluctuating workweek method of computing overtime pay under § 778.114.

B. History of the Fluctuating Workweek Method

The Department introduced the fluctuating workweek method of calculating overtime pay in its 1940 Interpretive Bulletin No. 4. *See* Interpretative Bulletin No. 4 ¶ ¶ 10, 12 (Nov. 1940). In 1942, the U.S. Supreme Court upheld the fluctuating workweek method in *Overnight Motor Transp. Co.,* v. *Missel,* 316 U.S. 572, 580 (1942). In that case, the Court held that where a nonexempt employee had received only a fixed weekly salary (with no additional overtime pay) for working irregular hours that frequently exceeded 40 per week and fluctuated from week to week, the employer was required to retroactively pay an additional 50 percent of the employee's regular rate of pay multiplied by the overtime hours worked to satisfy the FLSA's time and a half overtime pay requirement. *Id.* at 573–74, 580–81.[6] The quotient of the weekly salary divided by the number of hours actually worked each week, including the overtime hours, determined the ''regular rate at which [the] employee [was] employed'' under the fixed salary arrangement. *Id.* at 580.

In 1968, informed by the Supreme Court's holding in *Missel,* the Department issued 29 CFR 778.114, which explains how to perform the regular rate calculation under the FLSA for nonexempt salaried employees who work fluctuating hours. *See* 29 CFR 778.1, 778.109, 778.114. The Supreme Court has ''interpreted the [FLSA] statute in a manner that would 'afford the fullest possible scope to agreements' that are designed to address 'the special problems confronting employer and employee in businesses where the work hours fluctuate from week to week and from day to day . . . .' '' *Hunter* v. *Sprint Corp.,* 453 F. Supp. 2d 44, 56–57 (D.D.C. 2006) (quoting *Walling* v. *A.H. Belo Corp.,* 316 U.S. 624, 635 (1942)).[7] Indeed, ''[t]he [fluctuating workweek] method was developed to permit FLSA-covered employees who work irregular hours to negotiate a consistent *minimum* salary with their employers.'' *Hunter,* 453 F. Supp. 2d at 61 (emphasis in original).

Consistent with this manner of interpretation and purpose, the Department, until 2011, had never explicitly forbidden in rulemaking the payment of bonuses and premiums beyond the minimum salary to employees compensated under the fluctuating workweek method. To the contrary, as explained more fully below, in both the 2008 NPRM and in a 2009 opinion letter, the Department stated that such bonuses were consistent with using the fluctuating workweek method. However, in the preamble to the 2011 final rule, the Department stated a different position. The Department now adds clarifying language to 29 CFR 778.114 affirming its current position that employers using the fluctuating workweek method to calculate overtime compensation may pay bonuses and premiums in addition to the minimum salary.

Early examples of Department guidance and court decisions exemplify interpretations of the FLSA that ''afford the fullest scope possible'' to fluctuating workweek arrangements. For example, a 1999 WHD opinion letter explained that an employer using the fluctuating workweek method may pay bonuses for working holidays or vacations, broadly instructing that ''[w]here all the legal prerequisites for the use of the fluctuating workweek method of overtime payment are present, the FLSA, in requiring that 'not less than' the prescribed premium of 50 percent for overtime hours worked be paid, *does not prohibit paying more.*''[8] As another example, courts have applied and endorsed the fluctuating workweek method when employees received additional bonus payments. *See, e.g., Cash* v. *Conn Appliances, Inc.,* 2 F. Supp. 2d 884, 908 (E.D. Tex. 1997) (applying fluctuating workweek method where employee received incentive bonuses in addition to fixed salary); *see id.* at 893 n.17 (citing *Parisi* v. *Town of Salem,* No. 95–67–JD, 1997 WL 228509, at *3 (D.N.H. Feb. 20, 1997) (''The rules promulgated by the Secretary do not change when base compensation includes not only a salary but a bonus payment; the bonus payment is simply included in calculating the regular rate.'')); *Black* v. *Comdial Corp.,* Civ. A. No. 92–O81–C, 1994 WL 70113, at *5 (W.D. Va. Feb. 15, 1994) (''The provision of [straight time] bonus pay for hours 45–61 changes neither the salary basis of [an employee's] pay, nor the applicability of the fluctuating workweek method of 29 CFR 778.114.'').

However, in 2003, the First Circuit held that certain types of additional pay were incompatible with the fluctuating workweek method. *See O'Brien* v. *Town of Agawam,* 350 F.3d 279 (1st Cir. 2003). In *O'Brien,* the First Circuit held that police officers' receipt of ''bonus'' pay for working nights and long hours was contrary to the fluctuating workweek method. *Id.* at 288. The *O'Brien* court reasoned that an employer using the method must pay a ''fixed amount as straight time pay for whatever hours . . . work[ed],'' and therefore, *any* extra compensation would violate this ''fixed amount'' requirement. *Id.* (quoting 29 CFR 778.114(a)).

[5] Under certain circumstances, an employer may also pay overtime to an employee who is employed at two different rates ''at a rate not less than one and one-half times the hourly nonovertime rate established for the type of work [the employee] is performing during such overtime hours.'' 29 CFR 778.419(a); *see* 29 U.S.C. 207(g)(2).

[6] As discussed above, half-time, rather than time-and-a-half pay, for overtime is appropriate where the employee's weekly earnings constitute compensation for all hours worked that week, including overtime hours. Such a pay system already compensates the employee for overtime hours at the regular rate, and so the employee is entitled under the FLSA to an additional half-time the regular rate for those hours. *See* 29 U.S.C. 207(a).

[7] Note that *Belo* concerned a different type of flexible pay agreement, now codified under section 7(f) of the FLSA, under which an employee was paid on an hourly basis with a guaranteed weekly sum. The Department cites *Belo* here only for the limited purpose of recognizing the manner in which the Court generally interprets work arrangements under the FLSA when work hours vary from week to week. In *Hunter,* the district court similarly referenced *Belo* in analyzing the regular rate, and found notable that the Court decided *Belo* and *Missel* on the same day and that both cases ultimately informed the promulgation of the fluctuating workweek regulatory scheme. *See Hunter,* 453 F. Supp. 2d at 56, 58 (''With the companion decisions of *Missel* and *Belo* as a backdrop, the Department of Labor promulgated regulations that provide 'examples of the proper method of determining the regular rate of pay in particular instances,''' including the fluctuating workweek method) (quoting § 778.109).

[8] WHD Opinion Letter, 1999 WL 1002399, at *2 (May 10, 1999) (emphasis added).

The Department filed an amicus brief in support of the ultimate overtime-back-pay result in *O'Brien,* reasoning that the ''base salary covered only 1950 hours of work annually'' under the specific officers' agreement at issue, and therefore, this ''base salary was not intended to compensate them for an unlimited number of hours,'' as required by 29 CFR 778.114. Brief for the Sec'y of Labor as Amicus Curiae, *O'Brien,* 350 F.3d 279, 2004 WL 5660200, at *11, 13 (Feb. 20, 2004). In other words, the Department reasoned that the fluctuating workweek method could not be used because the officers' fixed salary was understood to compensate them for a specific—rather than fluctuating—number of hours each week. *Id.* However, the Department's brief did not address whether bonus pay beyond the ''fixed amount'' required was incompatible with the fluctuating workweek method.[9]

Some courts followed *O'Brien* to hold that certain types of bonuses were incompatible with the fluctuating workweek method,[10] while others continued to hold that bonuses were compatible with that method.[11] These inconsistent decisions appeared to have created practical confusion for employers.

The Department's 2008 NPRM, in an effort to ''eliminate confusion over the effect of paying bonus supplements and premium payments to affected employees,'' proposed to add a sentence to the end of § 778.114(a) providing that payment of overtime premiums and other bonus and non-overtime premium payments will not invalidate the ''fluctuating workweek'' method of overtime payment, but such payments must be included in the calculation of the regular rate unless excluded under section 7(e)(1) through (8) of the FLSA. 73 FR at 43656, 43670. The Department also proposed to add ''an example to § 778.114(b) to illustrate these principles where an employer pays an employee a nightshift differential in addition to a fixed salary.'' *Id.* at 43662; *see also id.* at 43670. The proposed clarifying language in the 2008 NPRM reflected the Department's position that bonus and premium payments are compatible with the fluctuating workweek method.

On January 16, 2009, WHD reaffirmed this same position when it issued an opinion letter explaining that ''[r]eceipt of additional bonus payments does not negate the fact that an employee receives straight-time compensation through the fixed salary for all hours worked whether few or many, which is all that is required under § 778.114(a).'' WHD Opinion Letter FLSA2009–24 (Jan. 16, 2009) (withdrawn Mar. 2, 2009).

On May 5, 2011, the Department issued a final rule, which did not adopt the proposed clarifying language to § 778.114. *See* 76 FR 18832. Instead, in the preamble, the Department stated it would leave the text of § 778.114 unchanged except for minor revisions. *Id.* at 18853. The Department expressly stated that the decision not to implement the proposed changes would avoid ''expand[ing] the use of [the fluctuating workweek] method of computing overtime pay beyond the scope of the current regulation,'' and would ''restore the current rule.'' *Id.* at 18850. The same 2011 preamble, however, interpreted the ''current rule'' to mean that bonus and premium payments ''are incompatible with the fluctuating workweek method of computing overtime under section 778.114.'' *Id.*

The 2011 preamble's reference to the ''current rule'' appears to have generated further confusion among the courts, as the ''record indicate[d] that in 2008 and 2009, . . . DOL construed the [fluctuating workweek] regulation to permit bonus payments,'' then ''shifted course'' in 2011 in a manner ''contrary to its publicly-disseminated prior position.'' *Switzer* v. *Wachovia Corp.,* No. CIV.A. H–11–1604, 2012 WL 3685978, at *4 (S.D. Tex. Aug. 24, 2012). For example, one court stated that the 2011 preamble ''presents an about-face'' that ''alters the DOL's interpretation'' so as to prohibit employers from using the fluctuating workweek method for workers who receive bonuses. *Sisson* v. *RadioShack Corp.,* No. 1:12CV958, 2013 WL 945372, at *6 (N.D. Ohio Mar. 11, 2013). Another court presented with identical facts as *Sisson* reached an opposite conclusion because it interpreted the 2011 preamble as ''a decision to maintain the status quo'' that ''does not[ ] disturb the law permitting employers to use the [fluctuating workweek] method to calculate the overtime pay of workers who receive performance bonuses.'' *Wills* v. *RadioShack Corp.,* 981 F. Supp. 2d 245, 259 (S.D.N.Y. 2013). As another example, a third court declined to give any weight to the 2011 preamble because it rested on an ''unconvincing'' interpretation of *Missel. Smith* v. *Frac Tech Servs., LLC,* No. 4:09CV00679 JLH, 2011 WL 11528539, at *2 (E.D. Ark. June 15, 2011).

A growing number of courts, since 2011, have developed a dichotomy between ''productivity-based'' supplemental payments, such as commissions, and ''hours-based'' supplemental payments, such as night-shift premiums. Such courts hold that productivity-based supplemental payments are compatible with the fluctuating workweek method, but not hours-based supplemental payments. *See, e.g., Dacar* v. *Saybolt, L.P.,* 914 F.3d 917, 926 (5th Cir. 2018), *as amended on denial of rehearing* (Feb. 1, 2019) (''Time-based bonuses, unlike performance-based commissions, run afoul of the [fluctuating workweek] regulations.''); *Lalli* v. *Gen. Nutrition Ctrs., Inc.,* 814 F.3d 1, 10 (1st Cir. 2016) (''a compensation structure employing a fixed salary still complies with section 778.114 when it includes additional, variable performance-based commissions''). However, as explained in the NPRM, the Department has never drawn this distinction, and this distinction is in tension with all of the Department's prior written guidance and statements on the issue such as the 2004 *O'Brien* amicus brief (declining to support application of fluctuating workweek method to payment of

[9] In reflecting on *Valerio* and *Tango's Restaurant,* the Department stated that ''[n]othing in either of those decisions suggests that 29 CFR 778.114 extends, contrary to its terms, to a pay system in which an employee, while receiving a fixed salary for a certain minimum number of hours, is paid more for additional straight time worked beyond a regular schedule.'' *O'Brien* Amicus Br. at *18 (citing *Valerio* v. *Putnam Assocs. Inc.,* 173 F.3d 35, 39 (1st Cir. 1999); *Martin* v. *Tango's Restaurant,* 969 F.2d 1319, 1324 (1st Cir. 1992)). Section 778.113 should be used to compute overtime owed based on the regular rate where a fixed salary is understood to cover a certain number of hours. While the brief did not address the precise issue of whether bonus pay beyond the ''fixed amount'' required was incompatible with the fluctuating workweek method, to the extent that the brief could be read to suggest that this may have been the Department's position at the time, the Department is making clear that this is not the Department's position. The Department instead seeks to clarify that bonus pay for extra straight time work is compatible with the fluctuating work week method. *See, e.g., Black,* 1994 WL 70113, at *2 (''The provision of [straight time] bonus pay for hours 45–61 changes neither the salary basis of [an employee's] pay, nor the applicability of the fluctuating workweek method of 29 CFR 778.114.'').

[10] *See, e.g., Ayers* v. *SGS Control Servs., Inc.,* No. 03 CIV. 9077 RMB, 2007 WL 646326, at *10 (S.D.N.Y. Feb. 27, 2007) (''Plaintiff who received sea pay or day-off pay did not have 'fixed' weekly straight time pay, in violation of 29 CFR 778.114(a).''); *Dooley* v. *Liberty Mut. Ins. Co.,* 369 F. Supp. 2d 81, 87 (D. Mass. 2005) (bonus pay arrangement for weekend work violated requirement that ''the employee must receive a fixed salary that does not vary with the number of hours worked during the week'') (internal quotation marks and citation omitted).

[11] *See, e.g., Clements* v. *Serco, Inc.,* 530 F.3d 1224, 1230 (10th Cir. 2008) (applying fluctuating workweek method where employee received recruitment bonus in addition to fixed salary); *Perez* v. *RadioShack Corp.,* No. 02 C 7884, 2005 WL 3750320, at *1 (N.D. Ill. Dec. 14, 2005) (applying fluctuating workweek method where employee received tenure pay, commissions, and other bonuses in addition to fixed salary).

additional straight-time hours), the 2008 NPRM and the 2009 opinion letter (permitting bonuses as compatible with the fluctuating workweek), and even the 2011 final rule (declining to implement the 2008 NPRM and stating that the current rule prohibits all bonuses as compatible with the fluctuating workweek).

As explained in the NPRM, the divergent views of the Department and the courts—and even among courts—have created considerable uncertainty for employers regarding the compatibility of various types of supplemental pay with the fluctuating workweek method. As discussed below, comments received from several commenters support this assessment and document the confusion. As such, the need for the Department to clarify its fluctuating workweek rule is even stronger now than in 2008, when it proposed a substantially similar clarification. The Department is therefore issuing this final rule to clarify that bonus and premium payments (whether hours-based, production-based, or other) are compatible with the use of the fluctuating workweek method of compensation.

C. The Department's Proposal

On November 5, 2019, the Department issued an NPRM proposing to revise its existing regulation at § 778.114(a) to clarify that any bonuses, premium payments, or other additional pay of any kind are compatible with the fluctuating workweek method of compensation, and that such payments must be included in the calculation of the regular rate unless they are excludable under FLSA sections 7(e)(1)–(8). *See* 84 FR at 59591. The NPRM further proposed to add examples to § 778.114(b) to illustrate these principles where an employer pays an employee, in addition to a fixed salary, (1) a nightshift differential and (2) a productivity bonus. *Id.* The Department also proposed simplifying revisions § 778.114 by listing each required circumstance for the fluctuating workweek method to correctly compute overtime pay and removing duplicative text from revised § 778.114(c). *Id.* Finally, the Department proposed to change the title of the regulation from ''Fixed salary for fluctuating hours'' to ''Fluctuating Workweek Method of Computing Overtime'' to better reflect the purpose of the subsection and to improve the ability of employers to locate the applicable rules. *Id.*

Approximately 36 individuals and organizations commented on the NPRM during the 30-day comment period that ended on December 5, 2019. The Department received comments from a diverse array of constituencies, including individual employees, employer and industry associations, employee advocacy groups, non-profit organizations, law firms, professional associations, and other interested members of the public. Many of the commenters supported the Department's efforts to clarify the fluctuating workweek regulation, while other commenters opposed the proposed rule. All timely comments received may be viewed on *www.regulations.gov,* docket ID WHD–2019–0006. The Department has carefully considered the timely-submitted comments on the proposed changes.

The Department received a few comments that are beyond the scope of this rulemaking, such as requests to raise the federal minimum wage. The Department does not have authority to effectuate such a statutory change and therefore did not consider doing so as part of the proposed rule. This final rule does not address comments that are out of scope of this rulemaking.

Significant issues raised in the comments on the Department's proposal are discussed below, along with the Department's response to those comments.

III. Final Regulatory Revisions

The Department is finalizing its proposal to revise and update the regulation at § 778.114 to clarify that bonus payments, premium payments, and other additional pay are consistent with using the fluctuating workweek method of compensation, and that such payments must be included in the calculation of the regular rate unless they may be excluded under FLSA sections 7(e)(1)–(8). *See* 29 U.S.C. 207(e)(1)–(8). The sections below discuss, in turn, the major issues raised by commenters and the Department's responses.

A. Section 778.114 Is an Example of Computing Overtime Pay Based on the Regular Rate

The NPRM proposed to revise § 778.114(a) to state that ''[t]he fluctuating workweek method may be used to calculate overtime compensation for a nonexempt employee if the [listed] conditions are met[.]'' 84 FR 59602. The purpose of the revision was to provide a list of conditions which, if present, ensure that overtime pay is correctly computed under the FLSA. But the proposed revision appears to have created, or at least did not dispel, the misconception that the fluctuating workweek method deviates from the standard ''one and one-half times'' overtime payment obligation under the FLSA. Some commenters, for instance, characterized the fluctuating workweek method as an ''exception'' or ''alternative'' to the overtime premium requirement. *See, e.g.,* Center for Workplace Compliance (CWC), National Employment Lawyers Association (NELA), National Employment Law Project (NELP).

Other commenters observed that the fluctuating workweek method in § 778.114 is merely an example of how to compute the regular rate and overtime compensation in certain circumstances. The U.S. Chamber of Commerce (Chamber) requested that the Department ''make clear that [§] 778.114 (like the other examples in the interpretive bulletin of which it is a part) merely provides an *example* of how to calculate overtime in the particular circumstances described in the example.'' Associated Builders and Contractors (ABC) similarly urged the Department ''to clarify that examples given in the final rule are just that: *examples.*'' The Chamber further requested that the Department clarify that, because the fluctuating workweek method in § 778.114 merely provides an example, it ''does not impose any restrictions, conditions, or limitations on the 'wages divided by hours' approach to calculating the regular rate and the resulting overtime premium.'' *See also* ABC at 3 (''The department should make clear that examples given do not impose limitations, restrictions or other conditions on applying the overtime calculation.'').

The Department agrees that § 778.114 is an example of how to properly compute overtime compensation based on the regular rate. Section 778.109 states, ''The following sections give some examples of the proper method of determining the regular rate of pay in particular instances,'' and § 778.114 is one of these examples. *See Allen* v. *Bd. of Pub. Educ. for Bibb Cty.,* 495 F.3d 1306, 1313 (11th Cir. 2007) (''[R]eading section 778.115 in the context of section 778.109, it becomes apparent that the former is one of the examples mentioned in the latter as a way that the regular rate may be calculated in certain cases.''). The Department briefly discussed these examples in the background section of this preamble, to make clear that the fluctuating workweek method under § 778.114 is merely one of several examples of how to properly compute the regular rate and overtime pay to satisfy the FLSA's statutory pay requirements.

As an example of correct computation of overtime pay based on the regular rate, § 778.114 cannot impose

requirements that are inconsistent with overtime pay requirements under the FLSA. *See Allen,* 495 F.3d at 1312. That said, § 778.114 *can* impose restrictions that *are* consistent with how overtime pay is computed under the FLSA. When an employee is paid a fixed salary as straight-time compensation for all hours worked and then receives a bonus, the fluctuating workweek method described in § 778.114 correctly computes the regular rate and overtime owed under the FLSA.

For the foregoing reasons, the Department is clarifying that the fluctuating workweek method under § 778.114 is just one example of how to properly compute overtime pay owed under the FLSA in the circumstances described therein. To make this point clearer, the Department is revising § 778.114(a) to state: ''An employer may use the fluctuating workweek method to properly compute overtime compensation based on the regular rate for a nonexempt employee under the following circumstances: . . .''

B. Circumstances Where an Employer May Use the Fluctuating Workweek Method To Compute Overtime Pay

Proposed § 778.114(a)(1) through (5) lists five circumstances which, if all are met, enable an employer to use the fluctuating workweek method to properly compute the regular rate and overtime pay owed under the FLSA. Each of these circumstances is discussed below.

1. Hours That Fluctuate From Week to Week

Current § 778.114(a) states that the fluctuating workweek method is appropriate where, *inter alia,* an employee ''ha[s] hours of work which fluctuate from week to week.'' The NPRM proposed to retain this requirement in § 778.114(a)(1), which lists ''the employee works hours that fluctuate from week to week'' as a condition that must be met. 84 FR at 59602.

Some commenters, such as Jackson Lewis, expressed concern that the NPRM did not specify whether the employee's fluctuation in hours worked per week could involve any range of hours or whether the hours worked must sometimes fluctuate below forty hours in the workweek. Although neither the current nor the proposed regulatory language require an employee's hours to sometimes fluctuate below forty hours per week, commenters pointed out that there has been uncertainty about this point. Commenters requested that the Department clarify that employers are able to use the fluctuating workweek method even for employees whose hours worked rarely, if ever, go below forty in the workweek.

The Department has long held the position that there is no requirement that the employee's hours of work must fluctuate below forty hours per week. The Department has consistently stated that the fluctuating workweek method remains appropriate even when it is only the number of overtime hours that fluctuate. *See* WHD Opinion Letter FLSA (October 27, 1967) (''There is no requirement that the hours of work of an employee compensated on the fluctuating workweek basis fluctuate above and below 40 hours in a workweek as there is for employees employed pursuant to section 7(f) (formerly section 7(e)) of the Act.''); WHD Opinion Letter FLSA2009–3, 2009 WL 648995 (Jan. 14, 2009) (stating that the fluctuating workweek method can be used to compute back wages for workers whose hours fluctuated, but who were generally expected to work a minimum of fifty hours per week).

Moreover, although a few courts have held that an employee's hours must fluctuate below forty hours per week before his or her overtime can be computed using the fluctuating workweek method,[12] courts have more frequently found that the fluctuating workweek method does not actually require that the employee's hours fluctuate below forty hours. *See, e.g., Aiken* v. *County of Hampton,* 172 F.3d 43, 1998 WL 957458, at *3 (4th Cir. 1998) (unpublished) (holding that an employer can use the fluctuating workweek method when the employee reliably works a base number of hours over forty per week, so long as the number of overtime hours per week fluctuate); *Condo* v. *Sysco Corp.,* 1 F.3d 599, 602 (7th Cir. 1993) (stating that the employer may use the fluctuating workweek method when an employee's hours fluctuate above but not below forty hours per week); *Mitchell* v. *Abercrombie & Fitch Co.,* 428 F. Supp. 2d 725, 735 (S.D. Ohio 2006), *aff'd* 225 F. App'x 362 (6th Cir. 2007) (per curiam) (finding no support for the argument that an employee's hours must fluctuate both above and below forty hours per week for the fluctuating workweek method to be used); *Ramos* v. *Telegian Corp.,* 176 F. Supp. 3d 181, 195 (E.D.N.Y. Mar. 31, 2016) (holding that the fluctuating workweek regulation does not require or even suggest a requirement that an employee's hours fluctuate both above and below forty in the workweek).

Having reviewed and considered the comments, the Department is adopting its proposed regulatory language regarding the requirement that an employee must receive a fixed salary that does not vary with the number of hours worked in the workweek, whether few or many, for the fluctuating workweek method to be applicable. To prevent any further misunderstanding, however, the Department is also clarifying that the regulation does not require that an employee's hours must sometimes fluctuate below forty hours per week, so long as the employee's hours worked do vary.

2. Fixed Salary That Does Not Vary With the Number of Hours Worked

Section 778.114(a) currently provides that, in order for an employer to calculate overtime pay pursuant to the fluctuating workweek method, the employee must be paid a ''fixed salary . . . for the hours worked each workweek, whatever their number.'' 29 CFR 778.114(a). The regulation also requires employers using the fluctuating workweek method to pay the guaranteed salary even where ''the workweek is one in which a full schedule of hours is not worked.'' 29 CFR 778.114(c). The NPRM proposed to modify the current regulation to clarify that employers may pay bonuses, premium payments, and other additional pay of any kind in addition to the fixed salary. *See* 84 FR 59602. The NPRM did not propose, however, to substantively change the current requirement that an employee must be paid a ''fixed salary'' representing compensation for all of the hours worked in the workweek. The proposed regulatory text in the NPRM stated that one of the conditions that must be satisfied in order to use the fluctuating workweek method is that the employee be paid ''a fixed salary that does not vary with the number of hours worked in the workweek.'' *Id.*

A few commenters, including ABC and the Chamber, requested that the Department state in the final rule that the fluctuating workweek method may be used as long as the employee is paid on a salary basis as defined in 29 CFR 541.602. They asked the Department to replace the current ''fixed salary'' requirement with, or to define the ''fixed salary'' requirement by, reference to the salary basis test that is used for the minimum wage and overtime exemption for executive, administrative, and professional employees in section 13(a)(1) of the FLSA. 29 U.S.C. 213(a).

[12] *See, e.g., Blotzer* v. *L–3 Comms. Corp.,* No. CV–11–274–TUC–JGZ, 2012 WL 6086931, at *12 (D. Ariz. Dec. 6, 2012); *Hasan* v. *GPM Investments, LLC,* 896 F. Supp. 2d 145, 150 (D. Conn. 2012); *Costello* v. *Home Depot USA, Inc.,* 944 F. Supp. 2d 199, 208 (D. Conn. 2013).

The Chamber urged the adoption of the salary basis test as defined in 29 CFR 541.602 in the fluctuating workweek context so that employers could make deductions from the ''fixed salary'' under the fluctuating workweek method on the same basis that deductions are permitted under part 541. The Wage & Hour Defense Institute (WHDI) similarly requested that the Department provide in the final rule that deductions from the salary for full days not worked (*e.g.,* due to illness) are permissible while using the fluctuating workweek method.

The Department has carefully considered these commenters' requests to incorporate the salary basis definition and to allow the same types of deductions permissible under part 541 from the ''fixed salary'' in § 778.114 and has determined not to adopt such a change at this time. The Department has consistently rejected the argument that the executive, administrative, and professional exemption's salary basis requirements and the permitted deductions from salary set forth in § 541.602 should apply to the fluctuating workweek method. *See, e.g.,* FLSA2006–15 Opinion Letter, 2006 WL 1488849, at *1 (May 12, 2006); FLSA Opinion Letter, 1999 WL 1002415, at *1–2 (May 28, 1999); FLSA Opinion Letter, 1991 WL 11648489, at *1 (Aug. 20, 1991). Adoption of the part 541 salary basis requirements and permitted pay deductions would be contrary to the Department's longstanding interpretation that salary deductions for days or hours not worked are generally incompatible with the payment of a ''fixed'' salary under the fluctuating workweek method. *See, e.g.,* FLSA2006–15 Opinion Letter, 2006 WL 1488849, at *1 (May 12, 2006); FLSA Opinion Letter, 1991 WL 11648489, at *1 (Aug. 20, 1991); FLSA Opinion Letter, 1983 WL 802650, at *1 (Nov. 30, 1983); FLSA Opinion Letter, 1978 WL 388412, at *1 (Dec. 29, 1978).

As the Department has explained, ''[I]t is the longstanding position of the Wage and Hour Division that an employer utilizing the fluctuating workweek method of payment may not make deductions from an employee's salary for absences occasioned by the employee.'' FLSA2006–15 Opinion Letter, 2006 WL 1488849, at *1 (May 12, 2006). For example, an employer using the fluctuating workweek method may not make deductions from an employee's salary when the employee has exhausted his or her sick leave bank or has not yet earned sufficient sick leave to cover an absence due to illness. *Id.; see also* FLSA Opinion Letter, 1978 WL 388412, at *1 (Dec. 29, 1978) (explaining that deductions made for ''excused absences, even for personal reasons (such as time off to visit a relative who is ill) would be inconsistent'' with the requirement in § 778.114 that an employee be paid a full, ''fixed'' salary for any week in which he or she performs work).

The Department has for many years advised, however, that an employer using the fluctuating workweek method of computing overtime pay ''may take a disciplinary deduction from an employee's salary for *willful* absences or tardiness or for infractions of major work rules, provided that the deductions do not cut into the required minimum wage or overtime compensation.'' FLSA2006–15 Opinion Letter, 2006 WL 1488849, at *1 (May 12, 2006) (emphasis added); *see also* FLSA Opinion Letter, 1983 WL 802650, at *1 (Nov. 30, 1983) (same); WHD Field Operations Handbook 32b04b(b) (same); *Samson* v. *Apollo Resources, Inc.,* 242 F.3d 629, 639 (5th Cir. 2001) (concluding that occasional deductions from pay for willful absences or tardiness ''do not run afoul of the guidelines governing the [fluctuating workweek] method''). If such deductions are consistently or frequently made, however, then ''the practice of making such deductions would raise questions as to the validity of the compensation plan.'' FLSA2006–15 Opinion Letter, 2006 WL 1488849, at *1 (May 12, 2006) (citing 29 CFR 778.306(b)); FLSA Opinion Letter, 1983 WL 802650, at *1 (Nov. 30, 1983) (same).

Replacing the ''fixed salary'' requirement of the fluctuating workweek method with the salary basis definition in § 541.602, thereby expanding the types of pay deductions that would be permissible under § 778.114, could have a significant effect on the scope and applicability of the fluctuating workweek method. Because the request to adopt the salary basis test and to permit new deductions not previously recognized as compatible with the ''fixed salary'' requirement in the fluctuating workweek context would constitute a significant change to the current regulation and the Department's longstanding interpretation of that regulation, the Department would want to solicit and carefully consider public comment on the issue before adopting such a revision.

Accordingly, the Department declines to grant the request to apply the salary basis requirements of § 541.602 to § 778.114 at this time. The Department has, however, determined that it would be helpful to the public to expressly incorporate in the regulation itself its longstanding interpretation that employers using the fluctuating workweek method may take occasional disciplinary deductions from an employee's salary for willful absences or tardiness or for infractions of major work rules, provided that the deductions do not cut into the required minimum wage or overtime compensation. The Department has therefore decided to add such clarifying language to the regulatory text in § 778.114(d).

3. The Fixed Salary Satisfies the Minimum Wage

Current § 778.114(a) states that the fluctuating workweek method is appropriate where, *inter alia,* ''the amount of the salary is sufficient to provide compensation to the employee at a rate not less than the applicable minimum wage rate for every hour worked in those workweeks in which the number of hours the employee works is greatest.'' 29 CFR 778.114(a). The NPRM included nearly identical text in proposed § 778.114(a)(3) as one of the circumstances that must be met for using the fluctuating workweek method.

A few commenters noted that, because the regular rate falls as hours increase under the fluctuating workweek method, in occasional workweeks in which an employee works extremely high hours, the regular rate may fall below the minimum wage, even where employers have endeavored to ensure that the payment system generally is compliant with minimum wage requirements. *See, e.g.,* Chamber; ABC. These commenters acknowledge that, in such situations, the employer would violate the FLSA unless it provides additional payments to satisfy the minimum wage. The commenters request, however, that the Department clarify that an employer's intermittent need to provide supplemental payments to ensure the minimum wage is met would not retroactively invalidate the fluctuating workweek method. They further request that the Department add language providing that the fixed salary need only be ''reasonably calculated'' to provide compensation at a rate not less than the applicable minimum wage.

After careful consideration, the Department has decided to adopt the language as proposed. As the commenters acknowledge, in any given workweek where the employee's fixed salary does not at least meet the applicable minimum wage, the employer must make an additional payment to bring the employee up to the applicable minimum wage. *See* WHD Opinion Letter FLSA 945 (Feb. 6, 1969); WHD Opinion Letter FLSA (June 12,

1969); *Cash,* 2 F. Supp. 2d at 894. Therefore, the proposed regulation maintains the requirement for the use of the fluctuating workweek method that the fixed salary be sufficient to compensate the employee for all hours worked at a rate not less than the applicable minimum wage.

In explaining that the fixed salary must be sufficient to compensate the employee at a rate not less than the minimum wage for the fluctuating workweek method to be used, however, the proposed regulatory language does not indicate that an occasional failure to meet this requirement retroactively invalidates the use of the fluctuating workweek method in previous workweeks or prevents the employer from continuing to use the fluctuating workweek method for that employee in subsequent workweeks. On the contrary, the Department has already determined that where an employer has reasonably calculated the fixed salary to cover at least the minimum wage for all hours worked, an occasional workweek where the fixed salary does not at least equal the applicable minimum wage, due to unusual and unforeseeable circumstances, does not invalidate the use of the fluctuating workweek method in other workweeks in which the salary equals or exceeds the applicable minimum wage as anticipated. *See* WHD Opinion Letter FLSA–883 (Aug. 30, 1966) (stating that the employer ''must not only in fact assure that no workweek will be worked in which the salary fails to provide at least the current statutory minimum hourly rate of $1.25, but the salary must also be so arranged that it is reasonably calculated to provide for such a statutory minimum''); WHD Opinion Letter FLSA (Feb. 6, 1969) (finding that ''the bona fides of the pay plan will not fail solely on the grounds that in five weeks in an annual period, due to unforeseen circumstances beyond the control or the anticipation of the employer and employee, the salary failed to provide at least the applicable statutory minimum hourly rate of pay'').

The courts have also consistently held that the employer is not prohibited from using the fluctuating workweek method in other workweeks merely due to infrequent workweeks where the fixed salary did not at least equal the minimum wage for all hours worked due to unforeseen circumstances. *See, e.g., Cash,* 2 F. Supp. 2d at 894 (finding that the employer's use of the fluctuating workweek method was still appropriate in most workweeks despite ''infrequent occasions when unforeseen events cause the employee to work so many hours that her salary fails to support an average hourly rate at least equal to the applicable minimum wage''); *Perez* v. *Radio Shack Corp.,* 2005 WL 3750320, at *5 (N.D. Ill. Dec. 14, 2005) (declining to conclude that the employer should have foreseen that employees' hours worked would be so high that their fixed salary would not cover the applicable minimum wage in all workweeks, when all employees in the potential class received less than the minimum wage approximately forty-nine times in a four-year time period); *Aiken,* 172 F.3d 43, 1998 WL 957458, at *5–6 (according substantial weight to the Department's opinion letters that suggest that ''making a minimum wage adjustment on five occasions in a two-year period does not defeat the validity of the fluctuating workweek plan,'' and concluding that employees are not entitled to any additional compensation beyond the minimum wage straight time and overtime adjustments they had already received for those workweeks); *Davis* v. *Friendly Exp., Inc.,* 2003 WL 21488682, at *2 (11th Cir. 2003) (finding that an employer does not have to adopt another method of computing overtime where the fixed salary did not at least equal the applicable minimum wage for all hours worked in a few, isolated workweeks due to unforeseen events).

The overall use of the fluctuating workweek method is thus not invalidated by occasional and unforeseeable workweeks in which the employee's fixed salary did not provide compensation to the employee at a rate not less than the applicable minimum wage, so long as the fixed salary was reasonably calculated to compensate the employee at or above the applicable minimum wage in the foreseeable circumstances of the employee's work. It is important to note, however, that the employer will not be able to use the fluctuating workweek method in circumstances where the employer could have foreseen that the employee's salary would not at least equal the applicable minimum wage in all workweeks, or where the employee's salary in fact did not at least equal the applicable minimum wage with some degree of frequency. In such circumstances, the employer and the employee must reach a new understanding, either as to the number of hours that the employee is to work or the amount of fixed salary to be paid, or the employer must use a different method to compute overtime. *See* WHD Opinion Letter FLSA (Feb. 6, 1969) (stating that the fluctuating workweek method ''would be inapplicable where the employer could have foreseen or anticipated that the salary would be insufficient to yield the minimum wage even in a nominal number of workweeks such as five in an annual period''); WHD Opinion Letter FLSA (June 12, 1969) (finding that ''the fact that the employee's salary failed to equal the statutory minimum wage in as many as 27 workweeks[ ] in one year would render moot any consideration that such a situation could not have been anticipated . . . [and] to ensure that his fluctuating workweek plan will be valid in the future, the employer must reach a new understanding with the employee''); *Davis* v. *Friendly Exp., Inc.,* No. 02–14111, 2003 WL 21488682, at *2 (11th Cir. 2003) (per curiam) (''If, however, the need for a minimum wage supplement becomes common, the fluctuating workweek calculation may not apply unless the employer and the employee reach a new understanding.''); *Aiken,* 172 F.3d 43, 1998 WL 957458, at *5 (rejecting an employee's argument that an employer and employee must reach a new understanding regarding the use of the fluctuating workweek method if there is even a single workweek in which the employee's fixed salary falls below the minimum wage, stating instead that the validity of such a pay plan is defeated only if such workweeks are foreseeable or frequent); *Perez* v. *Radio Shack Corp.,* No. 02 C 7884, 2005 WL 3750320, at *3 (N.D. Ill. Dec. 14, 2005) (''If the breaches become too common, however, the employer must cease using the fluctuating workweek method and reach a new understanding with the employee.'').

4. Clear and Mutual Understanding

In its current form, § 778.114(a) provides that, to use the fluctuating workweek method of computing overtime, an employer and employee must, *inter alia,* possess ''a clear mutual understanding . . . that the fixed salary is compensation (apart from overtime premiums) for the hours worked each workweek, whatever their number, rather than for working 40 hours or some other fixed weekly work period.'' 29 CFR 778.114(a). The current regulation further explains that the fluctuating workweek method may not be used ''unless the employee clearly understands that the salary covers whatever hours the job may demand in a particular workweek and the employer pays the salary even though the workweek is one in which a full schedule of hours is not worked.'' 29 CFR 778.114(c).

The NPRM proposed to modify the current language regarding the clear and mutual understanding requirement for readability and to clarify that employers may pay bonuses, premium payments,

and other additional pay of any kind in addition to the fixed salary. *See* 84 FR 59602. The NPRM did not, however, propose to substantively change the current requirement that an employee and employer must clearly understand that the fixed salary represents compensation for *all* of the hours worked in the workweek, whether many or few. *See id.* (proposing that the employee and employer must ''have a clear and mutual understanding that the fixed salary is compensation (apart from overtime premiums and any bonuses, premium payments, or other additional pay of any kind not excludable from the regular rate under section 7(e)(1) through (8) of the Act) for the total hours worked each workweek regardless of the number of hours'').

A few commenters, including the WHDI and Fisher Phillips, requested that this clear and mutual understanding requirement be removed or modified in the final rule. WHDI stated that, as previously interpreted by the Department and courts, an employer is not required to prove an employee's state of mind in order to satisfy this requirement. In other words, WHDI asserted that the fluctuating workweek method ''is established via objective evidence, not state of mind evidence'' and thus the reference to a clear and mutual understanding between the employer and employee is misleading and should be deleted. Fisher Phillips similarly argued that the NPRM's proposed ''clear and mutual understanding'' language would erroneously create a heightened ''requirement'' for use of the fluctuating workweek method. Fisher Phillips requested that WHD simply use the term ''understanding'' to avoid future litigation over the meaning of this provision.

The ''clear mutual understanding'' language has appeared in § 778.114 since 1968. *See* 33 FR 986, 991 (Jan. 26, 1968). The Department's longstanding position is that the mutual understanding that must exist between the employer and employee is that the fixed salary paid to the employee represents compensation for all the hours worked in that workweek, however many or few. *See, e.g.,* FLSA2009–3 Opinion Letter, 2009 WL 648995, at *2 (Jan. 14, 2009); FLSA Opinion Letter, 1999 WL 1002399, at *1 (May 10, 1999). The clear and mutual understanding requirement does not, however, extend to the specific method used to compute the overtime pay. *See* FLSA2009–3 Opinion Letter, 2009 WL 648995, at *2 (Jan. 14, 2009). In other words, the current regulation does not impose a requirement that the employee needs to fully understand the precise payroll method by which his or her overtime compensation is calculated. *Id.* Numerous courts have reached the same conclusion in analyzing the current regulation. *See, e.g., Garcia* v. *Yachting Promotions, Inc.,* 662 F. App'x 795, 797 (11th Cir. 2016) (per curiam) (''An employee does not have to understand every contour of how the fluctuating workweek method is used . . . so long as the employee understands that his base salary is fixed regardless of the hours worked.''); *Clements* v. *Serco, Inc.,* 530 F.3d 1224, 1230–31 (10th Cir. 2008) (same); *Valerio* v. *Putnam Assocs. Inc.,* 173 F.3d 35, 40 (1st Cir. 1999) (''The parties must only have reached a 'clear mutual understanding' that while the employee's hours may vary, his or her base salary will not.''); *Bailey* v. *Cnty. of Georgetown,* 94 F.3d 152, 156 (4th Cir. 1996) (''Neither [section 778.114] nor the FLSA in any way indicates that an employee must also understand the manner in which his or her overtime pay is calculated.''). The NPRM did not propose to substantively modify this longstanding interpretation or to create a new heightened requirement with respect to the nature of the understanding that must exist between the parties.

The Department believes that the clear and mutual understanding requirement is an important condition placed upon the usage of the fluctuating workweek method. The commenters requesting deletion of this requirement did not present evidence that courts, employers, or employees are unduly challenged in understanding or applying the requirement. Accordingly, the Department declines to substantively modify its proposal to incorporate the existing clear and mutual understanding requirement in the regulatory text. The Department has decided, however, to add clarifying text in § 778.114(a) to emphasize that, although the parties must have a clear and mutual understanding that the fixed salary is compensation for all hours worked in the workweek, they need not possess such an understanding as to the specific method used to calculate overtime pay.

5. Computing Overtime Pay Owed Under the Fluctuating Workweek Method

Proposed § 778.114(a)(5) requires that ''[t]he employee receives overtime compensation, in addition to such fixed salary and any bonuses, premium payments, and additional pay of any kind, for all overtime hours worked at a rate of not less than one-half the employee's regular rate of pay for that workweek.'' It further clarifies that ''[p]ayment of any bonuses, premium payments, and additional pay of any kind is not incompatible with the fluctuating workweek method of overtime payment, and such payments must be included in the calculation of the regular rate unless excludable under section 7(e)(1) through (8) of the Act.'' Proposed § 778.114(a)(5) also revises the current rule's explanation of how the regular rate and overtime pay would be computed under the fluctuating workweek method to account for cases where the employee receives non-excludable supplemental payments. Specifically, ''the regular rate of the employee will vary from week to week and is determined by dividing the amount of the salary and any non-excludable additional pay received each workweek by the number of hours worked in the workweek'' and ''[p]ayment for overtime hours at not less than one-half such rate satisfies the overtime pay requirement because such hours have already been compensated at the straight time rate by payment of the fixed salary and non-excludable additional pay.'' 84 FR at 59602.[13]

As discussed above, the fluctuating workweek method computes overtime pay where an employee receives a weekly salary that is understood to be compensation for all hours worked. Accordingly, § 778.114 is an example of a scenario where additional overtime compensation is properly computed as one-half the regular rate because the straight-time portion of the required ''one and one-half times the regular rate'' has already been paid. Any pay arrangement that provides compensation for all hours worked in a workweek would cover the straight-time portion of required overtime pay, leaving the need to pay only an additional half-time premium for each overtime hour. *See* 29 CFR 778.111, 778.112. The fact that an employee received a bonus or premium payment as part of such an arrangement would not negate the fact that he or she has already received the straight-time portion of required overtime pay as long at the additional payment is appropriately included in the regular rate. In other words, payment of bonuses, premiums, and other

[13] By comparison, current § 778.114(a) states that ''the regular rate of the employee will vary from week to week and is determined by dividing the number of hours worked in the workweek into the amount of the salary to obtain the applicable hourly rate for the week'' and ''[p]ayment for overtime hours at one-half such rate in addition to the salary satisfies the overtime pay requirement because such hours have already been compensated at the straight time regular rate, under the salary arrangement.'' 29 CFR 778.114(a).

additional pay under the fluctuating workweek method will not change the half-time overtime calculation, as long as those payments are appropriately included in the regular rate, because the employees will have already received the straight-time due to them for all hours worked, and only additional half-time needs to be computed for overtime hours to comply with the FLSA.

For example, suppose an employee were paid $491 in fixed weekly salary plus an $8 per hour nightshift premium. In a week in which the employee works 50 hours, including 4 hours for which the employee receives the nightshift premium, the employee's straight time pay is $523 ($491 salary plus $32 nightshift premium), and the regular rate is $10.46. The employer need only pay an additional $5.23, half time the regular rate, for each of the 10 overtime hours, for a total of $52.30. The payment of the $8 nightshift premium is reflected in this fluctuating workweek method computation. The fluctuating workweek method therefore correctly computes overtime pay owed under the FLSA when an employee receives a fixed salary and hours based premiums that compensate him or her for all hours worked. This is the same result as would occur if the employee were paid, for example, on a piece rate basis but also received additional pay for specific hours. *See* 29 CFR 778.111(a) (providing a regulatory example of payment of waiting time in addition to piece rate and explaining that only additional half time is due for overtime hours).

Many commenters welcomed the proposed clarification in § 778.114(a)(5). According to the Society for Human Resource Management (SHRM), ''employees and employers are best served by a system that promotes maximum flexibility in structuring employee pay and benefits and clarity for employers when preparing total compensation packages'' and the proposed clarification ''will provide much-needed clarity to the regulated community.'' The Society of Independent Gasoline Marketers of America (SIGMA) stated that ''[t]reating all such bonus payments consistently will reduce employer confusion and regulatory burdens and facilitate compliance with overtime rules.'' *See also* CWC, World Floor Covering Association (WFCA).

Some of the commenters supporting the clarification in proposed § 778.114(a)(5) requested that the Department further clarify the types of ''additional pay of any kind'' that would be compatible with the fluctuating workweek method. SHRM requested that the Department ''specifically referenc[e] 'commissions' as a permissible form of additional pay. . . to eliminate any confusion over whether such commission payments are compatible with the fluctuating workweek method.'' As noted in the NPRM, the Department agrees that commissions constitute a type of ''additional pay of any kind'' that would be compatible with the fluctuating workweek method. *See* 84 FR at 59594 (''[e]xamples of 'additional pay of any kind' may include commissions'').[14] Additionally, the Department believes hazard pay also would be compatible with the fluctuating workweek method. *Id.* at 59601 (listing additional pay ''for hazard duty, graveyard shifts, and so forth'' as types of premiums that would be permitted under this final rule). Accordingly, the Department is revising the phrase ''any bonuses, premium payments, or other additional pay of any kind'' in proposed § 778.114 to ''any bonuses, premium payments, commissions, hazard pay, or other additional pay of any kind.''

The WFCA requested that the Department restrict ''additional pay of any kind'' that would not invalidate the fluctuating workweek method ''to what is ultimately included in the definition of the regular rate.'' Such a restriction would imply that supplemental payments that are excludable from the regular rate under section 207(e)—such as overtime premiums under section 207(e)(5)–(7), or ''payments in the nature of gifts made at Christmas time'' under section 207(e)(1)—would invalidate the fluctuating workweek method. Such supplemental pay, however, does not impact the employee's straight time compensation because it is excludable from the regular rate. The Department has never interpreted such payments as being inconsistent with the use of the fluctuating workweek method of compensation.

The requested restriction would also have the effect of discouraging employers using the fluctuating workweek method from offering excludable supplemental pay. But as explained more fully in the Department's recent rulemaking regarding the regular rate, 84 FR 68736, excludable payments such as on-site medical care, wellness programs, and contributions to health and retirement plans, benefit workers immensely. *See* 29 CFR 778.215, 778.224. The Department believes such excludable remuneration should be encouraged and not discouraged. As such, the Department declines to restrict the types of additional pay that would be compatible with the fluctuating workweek method.

Several commenters objected to the proposed clarification that ''[p]ayment of bonuses, premium payments, and additional pay of any kind is not incompatible with the fluctuating workweek method of overtime payment'' and requested that the Department rescind the proposed revisions to § 778.114(a)(5). These commenters raised a number of arguments, which the Department addresses below.

a.) Whether Use of the Fluctuating Workweek Method Is Consistent With the Purpose of the FLSA

Comments submitted by NELA, NELP, Economic Policy Institute (EPI), and 18 State Attorneys General (State AGs) contend that, by making it easier for employers to use the fluctuating workweek method, the proposed clarification in § 778.114(a)(5) is contrary to the FLSA's remedial purpose. For instance, NELA asserts that the proposed rule would undermine ''the primary purposes of the FLSA's overtime provisions,'' which are ''to protect workers from long hours of work and to spread employment.'' *See also* NELP, EPI, State AGs.

As an initial matter, the Department emphasizes, as previously discussed, that the fluctuating workweek method does not deviate from the standard method of computing overtime pay under the FLSA. As has always been clear in the regulatory text, because the employee has received straight time compensation for all hours in the workweek, the overtime payment obligation is met by payment of an additional one-half the regular rate for all hours over 40 in the workweek.

Far from being contrary to the purpose of the FLSA's overtime requirement, half-time overtime under the fluctuating workweek method furthers that purpose. As the Supreme Court has explained, ''[B]y increasing the employer's labor costs by 50% at the end of the 40-hour week and by giving the employees a 50% premium for all excess hours, Section 7(a) achieves its dual purpose of inducing the employer to reduce the hours of work and to employ more men and of compensating the employees for the burden of a long

[14] 29 CFR 778.117 (''Commissions (whether based on a percentage of total sales or of sales in excess of a specified amount, or on some other formula) are payments for hours worked and must be included in the regular rate. This is true regardless of whether the commission is the sole source of the employee's compensation or is paid in addition to a guaranteed salary or hourly rate, or on some other basis, and regardless of the method, frequency, or regularity of computing, allocating and paying the commission.'').

workweek.'' *Youngerman-Reynolds Hardwood,* 325 U.S. at 423–24. The Supreme Court has further warned against the ''flawed premise that the FLSA pursues its remedial purpose at all costs.'' *Encino Motorcars, LLC* v. *Navarro,* 138 S. Ct. 1134, 1142 (2018) (internal quotation marks omitted). In this case, the FLSA pursues its remedial purpose in its overtime requirement at a clearly defined cost: ''increasing the employer's labor costs by 50% . . . for all [overtime] hours.'' *Youngerman-Reynolds Hardwood,* 325 U.S. at 423. That is precisely what the fluctuating workweek method achieves. As such, the fluctuating workweek method is consistent with the FLSA, and the Department believes that any increased use of the method by employers in response to this final rule will not conflict with the purposes of the Act.

b.) Whether the Final Rule Is Consistent With Supreme Court Precedent

In its comment, NELA states that the final rule is inconsistent with the Supreme Court's decision in *Missel,* 316 U.S. 572. According to NELA, ''the [*Missel*] Court held that an employer may pay a diminishing half-time overtime premium only if the employee receives a fixed weekly wage amount that never varies based on work performed.'' In support of this conclusion, NELA stated that ''[n]owhere in *Missel* did the Court consider, let alone authorize, the scenario of an employer paying a fixed salary [plus] other variable hours-based compensation under a half-time pay scheme.'' NELA further contended that the *Missel* Court ''directly answered'' the question of ''whether an employer can ever pay any amount other than base salary while still availing itself of [the fluctuating workweek method].'' The plaintiff in *Missel* received a $2.50 per week allowance for supper money in addition to the fixed salary, which NELA argued is a type of supplemental pay that does not vary with respect to hours worked.[15] According to NELA, since the *Missel* Court permitted non-hours-based additional compensation under the fluctuating workweek method provided that the employee's total compensation was fixed in advance and guaranteed, it must also have prohibited all hours-based additional compensation under that method. *See* NELA (arguing that *Missel* held that additional compensation is permitted under the fluctuating workweek method ''if (and only if) the additional compensation amounts—like the base salary—are fixed and do not vary based on the number or type of hours worked'').

The Department agrees with NELA that the *Missel* Court did not consider the scenario where an employee receives hours-based supplemental pay on top of a fixed salary, and so could not have expressly authorized such payments under the fluctuating workweek method. But for that same reason, the *Missel* Court could not have precluded such payments. 84 FR at 59593 (''*Missel* did not even address the issue of bonus or incentive payments beyond the fixed salary, let alone preclude certain types of payments.''); *see also Smith,* 2011 WL 11528539, at *2 (''Nothing in *Missel* prohibits the use of the fluctuating work week method for calculating [overtime owed] whenever an employer gives a bonus to an employee.'').

The Department does not agree that the *Missel* Court's decision means that all hours-based compensation must be forbidden. As NELA conceded, *Missel* did not address hours-based compensation. As such, the Court could not have ''directly answered'' any question concerning hours-based supplemental pay. Therefore, *Missel* does not support NELA's contention that a half-time overtime premium is appropriate ''only if the employee receives a fixed weekly wage amount that never varies based on work performed.''

c.) Whether the Final Rule Is Inconsistent With Other Legal Precedent

Several commenters, including NELP, argued that ''since *Missel,* courts have consistently been clear in their application of the [fluctuating workweek] rule. Under the [fluctuating workweek method], the employer's regular rate of pay can vary only with the number of hours worked per week, not the type of work performed during those hours or any premiums paid for those hours.'' *See also* State AGs. These commenters list several court cases holding that the fluctuating workweek method is not compatible with hours-based bonuses. *See, e.g.,* NELP; State AGs.

However, since *Missel,* courts have taken a wide range of approaches regarding the payment of bonuses and premium payments under the fluctuating workweek method and have not been consistent in their application of the fluctuating workweek rule. For example, some courts held that bonus and premium payments were permitted under the fluctuating workweek method, and did not make the distinction between hours-based and production-based payments that some courts later developed. *See, e.g., Cash,* 2 F. Supp. 2d at 908 (applying fluctuating workweek method where employee received incentive bonuses in addition to fixed salary); *Black,* 1994 WL 70113, at *5 (applying fluctuating workweek method where employee received straight-time bonuses for long hours in addition to fixed salary). Conversely, other courts have categorically prohibited such pay. *See West* v. *Verizon Servs. Corp.,* No. 8:08–cv–1325–T–33MAP, 2011 WL 208314, at *11 (M.D. Fla. Jan. 21, 2011) (fluctuating workweek method invalid because employee ''received various bonus payments and commissions'').

In 2003, the First Circuit held that the fluctuating workweek method may be used only where an employee receives a '' 'fixed amount as straight time pay for whatever hours [the employee] is called upon to work in a workweek.' '' *O'Brien,* 350 F.3d at 288 (quoting 29 CFR 778.114(a)). Following *O'Brien,* and citing the 2011 final rule preamble in their reasoning, some courts have developed a dichotomy that permits production-based bonuses but prohibits hours-based bonuses under the fluctuating workweek method. *See Dacar,* 914 F.3d at 926; *Lalli,* 814 F.3d at 10. The Department notes, however, that neither the Department's regulations nor the FLSA distinguish between production-based and hours-based bonuses. Further, and perhaps most importantly, this legal precedent was based on the wording of the regulation prior to this rulemaking, and was exacerbated by the unclear preamble discussion in the 2011 final rule, both of which the Department is addressing in this rulemaking.[16]

As these divergent approaches demonstrate, and contrary to the assertions of some commenters, the case law is neither consistent nor clear. These inconsistent interpretations by

[15] The Department notes that the Supreme Court's opinion in *Missel* made no mention of the allowance for supper money, which was noted in the lower court opinions. The fixed salary amount referenced in the Court's opinion, however, included the weekly allowance. The Department also notes that under certain circumstances supper money can be excluded from the regular rate. 29 CFR 778.217(b)(4).

[16] NELP states in a footnote that courts issuing case law that is inconsistent with the final rule ''have been interpreting Supreme Court precedent, not the regulation.'' But, as explained above, Supreme Court precedent does not directly address the compatibility of bonus and premium payments with the fluctuating workweek method. And the courts cited by NELP ground their analysis in the Department's fluctuating workweek regulation. For instance, the *O'Brien* court explained that ''the parties limit their arguments to whether the compensation scheme . . . comports with the regulation, and we confine ourselves to the same question.'' 350 F.3d 287 n.15.

courts have created practical confusion and challenges for employers. Comments received in this rulemaking document the confusion caused by the judicially-developed distinction between productivity-based and hours-based bonuses. *See* CWC (''Some courts have permitted additional payments, others have prohibited them. S[t]ill other courts have drawn distinctions between permitted and prohibited additional payments based on the purpose of the payments. This widely divergent case law has created a greater disincentive for employers to consider the fluctuating workweek [method].''). One of the reasons for this rulemaking is to clear up the confusion caused by the divergent case law.

This final rule makes clear that permitting all supplemental pay while using the fluctuating workweek method is consistent with how overtime pay is computed based on the regular rate under the FLSA.

The Department recognizes that this clarification is inconsistent with certain legal precedent, such as those cases that adhere to the judicially-developed dichotomy between hours-based and productivity-based bonuses.[17] However, as discussed above, neither the Department's regulations nor the FLSA distinguish between production- and hours-based bonuses when computing the regular rate and overtime pay. Indeed, this dichotomy lacks support and is in tension with all of the Department's prior written guidance on the issue. The clarifications provided in this preamble discussion and the corresponding explicit revisions to the regulatory text will bring much needed clarity regarding the compatibility of *all* types of bonuses with the fluctuating workweek method to the courts, employers, and employees alike.

d.) Whether the Final Rule Is Consistent With the Department's Prior Position

NELA argues that the final rule is inconsistent with the Department's prior position, particularly the position taken in the 2011 final rule. But as explained in the NPRM and below, it is not clear what precise position was taken in that final rule. In fact, that is the point of this rulemaking: to clarify the Department's position on whether payments of bonuses and premiums are permissible under the fluctuating workweek method.

Since 1968, the regulatory text of § 778.114 has explained that, under the fluctuating workweek method, ''[p]ayment for overtime hours at one-half [the regular] rate in addition to the salary satisfies the overtime pay requirement because such hours have already been compensated at the straight time regular rate, under the salary arrangement.'' In the 2008 NPRM, the Department proposed to clarify that the payment of additional bonuses and premiums was compatible with the fluctuating workweek method. This was because, as explained in the 2009 opinion letter, ''[r]eceipt of additional bonus payments does not negate the fact that an employee receives straight-time compensation through the fixed salary for all hours worked.''

In the 2011 final rule, the Department did not adopt the proposed clarifying language to § 778.114, and instead the Department stated it would leave the text of § 778.114 unchanged except for minor revisions. The Department expressly stated that the decision not to implement the proposed clarifications would avoid ''expand[ing] the use of [the fluctuating workweek] method of computing overtime pay beyond the scope of the current regulation,'' and would ''restore the current rule.'' 76 FR at 18850. The same 2011 preamble, however, interpreted the ''current rule'' to mean that bonus and premium payments ''are incompatible with the fluctuating workweek method of computing overtime under section 778.114.'' *Id.* Because the Department had stated clearly in both the 2008 NPRM and the 2009 opinion letter that payment of bonuses was permissible under the same regulatory language in § 778.114 that the Department retained in the 2011 final rule, the Department's reference to the ''current rule'' prohibiting such payments was unclear. *See* 73 FR at 43662; WHD Opinion Letter FLSA2009–24 (Jan. 16, 2009) (withdrawn Mar. 2, 2009). As explained in the background section of this preamble, the apparent misalignment between the 2011 preamble language and the substantively unchanged final regulatory text created substantial confusion for the regulated community. *See* CWC (''[S]tatements in the preamble to the [2011] final rule . . . contributed to the growing confusion over how additional compensation should be treated'' because ''while DOL did not publish any substantive changes to its codified rules, it articulated an explanation directly contrary to past practice.'').

Attempting to make sense of the 2011 final rule, the court in *Sisson* concluded that the 2011 final rule actually ''present[ed] an about-face'' that ''alters the DOL's interpretation.'' 2013 WL 945372, at *6; *Switzer,* 2012 WL 3685978, at *4 (describing the Department as having ''shifted course'' in the 2011 final rule). This interpretation, however, ignores the ''restore the current rule'' language and the unchanged regulatory text. The *Wills* court concluded that ''the status quo was being maintained,'' but defined the status quo as then-emerging case law permitting production-based bonuses while prohibiting hours-based ones. 981 F. Supp. 2d at 262; *see Lalli,* 814 F.3d at 9 (''DOL's decision to leave the regulation alone means that the bulletin would have done nothing to change the federal courts' existing 'treatment of that precise issue'''') (quoting *Wills,* 981 F. Supp. 2d at 252). Many subsequent courts have affirmed the distinction between production-based and hours-based bonuses. *See, e.g., Dacar,* 914 F.3d at 926; *Lalli,* 814 F.3d at 8–10. But the Department has never endorsed the distinction between hours-based bonuses and production-based bonuses. In fact, as NELA points out, the Department's documented intent to file an amicus curiae brief in support of the appeal of the *Wills* decision evinces the Department's disagreement with *Wills.*

The Department's clarification in this final rule is consistent with its interpretations in the 2008 NPRM and the 2009 opinion letter and, importantly, is also consistent with the regulatory text as reaffirmed in the 2011 rule, which explained that employers that paid a fixed salary to employees whose hours fluctuated from week to week would satisfy their overtime payment obligation by paying an additional 50 percent of the employee's regular rate for all overtime hours. The Department's clarification in this final rule does not alter this fundamental principle of overtime compensation. Instead, it clarifies that the employee's straight time compensation may include bonus and premium payments in addition to a fixed salary. In such situations, where the regular rate includes all payments that are not excludable under section 207(e)(1)–(8), the employer's overtime payment obligation will be met by the payment of an additional 50 percent of the employee's regular rate for all overtime hours. Thus the Department does not agree that the current rule is inconsistent with its prior positions.

e.) Whether the Inverse Relationship Between the Regular Rate and Hours Worked Undermines the FLSA

Several commenters expressed concern that, under the fluctuating

[17] Indeed, given courts' different approaches, no rule here can be consistent with all the case law since *Missel,* and the Department does not attempt to do so. Rather, the Department's objective is to provide a rule that gives clear guidelines to employers and employees.

workweek method, the regular rate decreases when hours increase. For instance, the State AGs stated that the fluctuating workweek method of calculating overtime ''is therefore the only method whereby the employee's regular rate of pay and the employee's overtime rate of pay actually decrease as the hours worked increase.'' These commenters assert that this inverse relationship is in tension with the remedial purposes of the FLSA's overtime requirement and harms workers paid under that method. NELA, for example, stated that the inverse relationship between the regular rate and hours worked ''provides a strong financial incentive to employers to require ever more overtime hours and to limit the number of employees.''

As discussed above, however, the fluctuating workweek method is not the only method under which the regular rate decreases as hours worked increase. For instance, the regular rate of an employee paid through a day-rate arrangement under § 778.112 is equal to the fixed day-rate amounts per week divided by hours worked. Because the day rate does not increase for longer work days, the regular rate necessarily falls as hours worked increase. Thus, there is some degree of inverse relationship between the regular rate and hours worked in every overtime compensation example listed in §§ 778.110–778.115 except where the employee is paid exclusively through an hourly rate, in §§ 778.110(a) and 778.113. Whenever an employee receives any compensation in addition to or in lieu of hourly pay—such as a fixed bonus, or a day rate—the regular rate likely would vary inversely with hours worked. But that does not mean such compensation arrangements are at odds with the FLSA. Indeed, it is a function of the FLSA's definition of the regular rate as non-excludable compensation *divided* by hours worked. Furthermore, nothing in this rule changes the basic rules for calculating pay under the fluctuating workweek method, including overtime. As such, any ''financial incentive'' to requiring overtime work would remain the same as in the status quo.

The Department further disagrees that the inverse relationship ''provides a strong financial incentive to employers to require ever more overtime hours and to limit the number of employees.'' NELA. While the overtime premium per hour decreases as hours increase, the employer must still pay an overtime premium that is designed to discourage overtime work and spread employment, and the total amount of overtime premium an employer owes continues to increase as hours increase.

The Department notes that the payment of hours-based bonuses to employees compensated under the fluctuating workweek method—which this final rule clarifies is permitted—may diminish or even eliminate the inverse relationship between hours worked and the regular rate that commenters find objectionable. Consider the compensation scheme in *Black,* which the court upheld as compatible with the fluctuating workweek method, *see* 1994 WL 70113, at *2, *5: The Employee was paid a fixed salary for all hours worked in a workweek plus a straight-time bonus for each hour worked in excess of 45. The bonus rate equals the weekly salary divided by 40 (which equals 0.025 of the fixed weekly salary per hour). If the employee works more than 45 hours, the regular rate equals:

$$\frac{(fixed\ salary) + ((hours\ worked - 45) \times 0.025\ (fixed\ salary))}{(hours\ worked)}$$

Under this this compensation scheme, so long as the employee works enough hours to receive the bonus, the regular rate would actually increase for each additional hour of overtime work. For example, an employee who works 50 hours and receives a fixed salary of $600 plus a straight-time bonus of $15 for each hour worked in excess of 45 would have a regular rate of $13.50. But if he or she works five additional hours, the regular rate would rise to $13.63.

f.) Effects on Workers Who Switch to the Fluctuating Workweek Method

The proposed clarification in § 778.114(a)(5) would make it more attractive for employers to use the fluctuating workweek method, so employers would be more likely to start using the method. While some commenters welcomed greater regulatory clarity, others, including EPI, State AGs, and NELP, expressed concern that when an employee switches to being paid under the fluctuating workweek method, the ''employee . . . will lose the time-and-a-half overtime premium.'' EPI; *see also* State AGs, NELP. EPI further described how, in its view, a worker switched to the fluctuating workweek method could face reduced earnings: ''Employers will . . . be unlikely to switch to the fluctuating workweek method *unless their employees tend to work more hours above their usual hours than below their usual hours.* That means workers whose employers choose to switch to the fluctuating workweek method are likely to receive lower earnings than they receive under the usual method.''

The Department does not believe this scenario is likely to be widespread, if it occurs at all. It is certainly true that an employer theoretically could reduce an employee's overall earnings by switching that employee from hourly pay to the fluctuating workweek method. But the same employer could also reduce the employee's earnings by the exact same amount by lowering the employee's hourly rate of pay. As such, the ability to switch an employee to the fluctuating workweek method should not make the employer more able or willing to reduce the employee's earnings.

Such an employee would be agnostic as to the method behind an earning reduction: Having the hourly wage reduced or being switched to the fluctuating workweek method with an equivalently low salary would both make the employee equally dissatisfied because the negative effect on earnings is the same. Worker dissatisfaction may affect morale, turnover, and other productivity factors. The employer would also be agnostic: The employer's labor cost savings are the same and the employee is equally dissatisfied. So the employer faces the same tradeoff between labor costs savings, on one hand, and worker dissatisfaction on the other. The Department therefore finds no reason why the ability to switch an hourly worker to the fluctuating workweek method (an ability already present without the new rule) would make an employer any more able or willing to reduce the employee's earnings as compared to simply reducing the hourly rate of pay.[18]

[18] While this possibility was not raised by EPI, the Department posits that some hourly employees may be willing to forgo a small amount of earnings to be switched to the fluctuating workweek method, perhaps because the employee prefers a fixed salary to unstable hourly pay. In this instance, an employer could theoretically switch the employee to the fluctuating workweek method while reducing the employee's earnings by the exact amount the

As such, the Department believes employers switching hourly employees to the fluctuating workweek method should not, on balance, reduce workers' earnings. To the contrary, overall earnings are likely to increase. As explained below, the final rule is likely to reduce labor market inefficiency, *i.e.,* deadweight loss, by reducing employers' need to manage the hours of employees who are switched to the fluctuating workweek method and enabling employers to incentivize work not presently being performed. The benefit of this deadweight loss reduction will be distributed among both capital and labor factors, meaning that, on average, employers' profits and workers' earnings will both rise. *See* SHRM (''employees *and* employers are best served by a system that promotes maximum flexibility in structuring employee pay and benefits'').

g.) Effects on Workers Paid Under the Fluctuating Workweek Method

Several commenters, including State AGs and NELA, expressed concern that the final rule would encourage employers to shift the compensation of employees already being paid under the fluctuating workweek method away from the fixed salary and towards bonuses and premiums. The NPRM expressly considered this possibility, which was also raised in the 2011 final rule, but ultimately concluded that any compensation shifting would not be significant. The Department's conclusion in this regard relied on 2019 Bureau of Labor Statistics (BLS) data showing that supplemental pay of the type permitted by the final rule—*i.e.,* nonproduction bonuses and shift differentials—constitutes a relatively small portion of employees' overall compensation nationwide, no more than five percent of any occupation.[19]

The Department reasoned that, if the prohibition against nonproduction bonuses and shift differentials under the fluctuating workweek method were lifted, employers using that method would, at most, shift compensation away from the salary and towards such supplemental pay to approximately the same extent as employers nationwide who are not similarly restricted. Since BLS data show employers nationwide have not shifted compensation away from base pay towards nonproduction bonuses and shift differentials to a significant degree (again, no more than five percent for any occupation), the Department concluded that lifting the restriction for employers using the fluctuating workweek method would not result in significant compensation shifting towards those types of pay.

Some commenters agreed with this conclusion. *See, e.g.,* SIGMA (''The Association concurs with DOL's assessment, which is based upon data from the Bureau of Labor statistics, that permitting employers to pay bonuses, premiums, and additional pay to employees compensated with the fluctuating workweek method will *not* lead employers to shift large portions of salaries into those types of supplemental payments.''). Other commenters disputed the Department's use of certain BLS data in this rulemaking. NELA asserted, ''The fact that the Bureau's statistics show employers currently pay civilians nonproduction bonuses as 1.8% of compensation and shift differentials as 0.2% does not constitute evidence or indication of any kind that employers will not shift compensation to non-guaranteed bonuses and supplementary compensation if given the opportunity to do so'' under the fluctuating workweek method. The State AGs further argued that the Department's reliance on the BLS data ''ignores . . . that the rule [the Department] is changing has prevented employers from exploiting the [fluctuating workweek] method and acted as a deterrent against shifting more pay towards hours-based premiums.''

These commenters appear to believe that the perceived prohibition of supplemental pay under the fluctuating workweek method is responsible for the low rate at which employees nationwide receive nonproduction bonuses and shift differentials in comparison to base pay reflected in the BLS data. But that cannot be true because over 99 percent of employees nationwide are not paid under the fluctuating workweek method and so do not face its perceived restrictions against paying nonproduction bonuses and shift differentials.[20] Even though the vast majority of employees nationwide face no restrictions from receiving nonproduction bonuses and shift differentials, their employers have not shifted a significant portion of their compensation towards such supplemental pay. Accordingly, the Department continues to believe that BLS data indicate that, if employees paid using the fluctuating workweek method of compensation begin to receive supplemental pay, there would not be significant compensation shifting.

NELA further argued that ''the fact that the Bureau of Statistics was reporting the same (and even lower) average figures of supplemental pay as a percentage of total compensation when the 2008 NPRM issued . . . and when the Department issued its 2011 Final Rule, proves that the same Bureau statistics . . . are simply not evidence of the proposition they are cited to purportedly support.'' According to NELA, this is because ''those figures were reported and available to commenters and the Department alike when it determined in 2011 that employers would likely reduce salaries and shift compensation to non-guaranteed bonus and other supplemental pay if given the opportunity to do so'' under the fluctuating workweek method.[21]

The Department agrees with NELA that the rate at which employers nationwide have paid nonproduction bonuses and shift differentials as compared to base pay has been very low for at least the past decade. That supports the Department's conclusion that employers using the fluctuating workweek method would not shift more compensation to nonproduction bonuses and shift differentials if given the same opportunity to do so as employers nationwide. The Department disagrees with NELA that the availability of similar BLS data between 2008 and 2011 meant that the Department's concern regarding compensation shifting was informed by such BLS data. No commenter presented BLS data to the Department, and the Department's 2011 final rule did not cite

employee was willing to forgo without having a net effect on the employee's satisfaction. But the Department does not believe that the employer could convince the employee to forgo the entire amount he or she is willing to forgo because an employer's market power—while often substantial—is rarely absolute. As long as the employee has even a small degree of market power, the employee is likely to forgo less earnings than he or she was willing to be switched to the fluctuating workweek method, leaving the employee more satisfied than before. This hypothetical scenario does not raise significant worker welfare concerns because the end outcome reflects the employee's preferences as much as the employers. Indeed, by the terms of the hypothetical scenario, switching to the fluctuating workweek method is guaranteed to leave the employee at least as satisfied as before.

[19] Bureau of Labor Statistics, Employer Costs for Employee Compensation—June 2019, *https://www.bls.gov/news.release/pdf/ecec.pdf.*

[20] The RIA estimates that 698,393 workers are compensated using the fluctuating workweek method, which represents 0.4 percent of U.S. workers.

[21] Citing Bureau of Labor Statistics, Employer Costs for Employee Compensation Historical Tables June 2019, Table 1, *https://www.bls.gov/web/ecec/ececqrtn.pdf* (reporting for ''all workers'' supplemental pay as percentage of total compensation at 2.5% (2008), 2.5% (2009), 2.3% (2010), 2.4% (2011); shift differentials at .2% (2008–11); and nonproduction bonuses at 1.4% (2008), 1.5% (2009), 1.3% (2010), and 1.4% (2011)).

any such data. The 2011 final rule did not state that it relied on any data whatsoever to conclude that the proposed regulation ''could have had the unintended effect of permitting employers to pay a greatly reduced fixed salary and shift a large portion of employees' compensation into bonus and premium payments.'' 76 FR at 18850.

For these reasons, the Department continues to have confidence in BLS data indicating that the final rule's clarification that employees paid under the fluctuating workweek method may receive supplemental pay would not result in significant shifting of compensation away from the fixed salary towards supplemental pay.

h.) Whether the Final Rule Will Create Confusion for Employers

The State AGs argue that the proposed clarification will ''create confusion for employers and courts.'' State AGs. In particular, the State AGs note that certain states prohibit the fluctuating workweek method, and believe that employers in these states will not understand that the method is prohibited by state law. As such, these employers may ''find themselves embroiled in costly litigation or subject to investigation.'' *Id.*[22]

States may and often do enact labor laws that are more restrictive on employers than the federal standard. Employers routinely are able to navigate both state and federal law. Thus, the Department believes that employers in a state that prohibits the fluctuating workweek method, such as California, will understand that the method remains prohibited by that state's more restrictive law. It is unlikely such employers will, as the State AGs fear, ''rush to use'' the fluctuating workweek method in contravention of state law.

Instead, commenters that represent employers (or labor compliance professionals) overwhelmingly agreed with the NPRM that this final rule would reduce confusion and enhance clarity regarding the application of the fluctuating workweek method. For instance, the Chamber stated that ''the 2011 Preamble generated substantial confusion and uncertainty for courts and employers alike. Employers saw this as an attack on their ability to reward their salaried nonexempt employees with variable incentive compensation.'' The CWC explained that ''statements in the preamble to the [2011] final rule . . . contributed to the growing confusion over how additional compensation should be treated'' because ''while DOL did not publish any substantive changes to its codified rules, it articulated an explanation directly contrary to past practice.''

SHRM further stated that the 2011 preamble ''resulted in an initial wave of confusion among HR professionals.'' SHRM; *see also id.* (''[T]he source of confusion regarding the interaction of bonuses and fluctuating workweek is the 2011 Preamble.''). This confusion has deterred employers from paying their workers bonuses. According to SHRM, ''The Department's statement in the 2011 Final Rule preamble that the payment of any compensation in addition to the salary payment somehow 'invalidated' the fluctuating workweek method caused many employers to either (1) eliminate bonuses for employees paid pursuant to the fluctuating workweek method; or (2) pay previously salaried employees an hourly rate (and continue any bonus programs). Although these employers typically did not agree with [the] Department's legal reasoning, nor believe the restructured pay plans best served the needs of their business and employees, the substantial risk of litigation created solely by the Department's preamble language forced their hands.'' Therefore, the Department continues to be confident this final rule will reduce confusion for employers.

i.) Whether To Exempt First Responders

The International Association of Fire Fighters (IAFF) ''urges the Department to carve out an exception for fire fighters and other public safety personnel should it choose to move forward with the proposed regulation.'' As explained above, the fluctuating workweek method is merely an example of how regular rate and overtime computation principles apply in certain circumstances.

The Department has never had industry or occupational exceptions for the use of the fluctuating workweek method and IAFF has not provided sufficient evidence that the Department should consider such an exception now. The Department is therefore adopting § 778.114(a)(5) as proposed, with two minor changes. First, the Department is adding ''commissions'' as an example of additional pay that is compatible with the fluctuating workweek method. And second, the Department is replacing ''not incompatible'' with ''compatible'' to improve readability.

C. Examples of the Fluctuating Workweek Method

In the NPRM, the Department proposed two new examples to illustrate how the fluctuating workweek method computes overtime pay when an employee receives (1) a nightshift differential and (2) a productivity bonus in addition to the fixed salary. Fisher Phillips stated in its comment that ''the examples are unnecessarily lengthy'' and suggested ''that the calculation be performed for only one workweek instead of all four in . . . examples [2 and 3] and/or collapse these examples as the employee could earn both a shift differential and a productivity bonus.''

The Department agrees that it is unnecessary to show how the fluctuating workweek method computes overtime pay for four different workweeks in examples 2 and 3. But the Department believes it would be useful for each example to compute overtime for one workweek in which hours worked is over 40 and one workweek in which it is under 40. Accordingly, the Department is revising examples 2 and 3 to compute overtime pay in two different workweeks: One workweek where the employee works 37.5 hours and another in which the employee works 48 hours.

SHRM requested that the Department add ''an example that addresses payments made for work outside of the employee's normal schedule.'' Specifically, SHRM suggested adding the following example to the regulatory text: ''an employer and employee reach an understanding that the salary is intended to cover all hours worked from Monday to Friday, but occasional Saturday work will be paid at a day rate or hourly rate.''

The Department does not believe the fluctuating workweek method would be appropriate in the scenario SHRM described. This is because the fluctuating workweek method computes overtime pay where the employee and employer both understand that the fixed salary covers *all* hours worked in the entire workweek, not just ''Monday to Friday'' as in SHRM's suggestion. That said, if the parties understand that the fixed salary covers all hours worked in a workweek, an employer may offer a premium for weekend work outside the employee's normal schedule and still use the fluctuating workweek method to compute the regular rate and overtime pay.

D. Revisions to § 778.114(c)

In its current form, § 778.114(c) states that ''[w]here all the legal prerequisites for use of the 'fluctuating workweek'

[22] As set forth in the NPRM and confirmed by the State AGs, Pennsylvania, Alaska, California, and New Mexico do not generally permit employers to use the fluctuating workweek method.

method of overtime payment are present, the Act, in requiring that 'not less than' the prescribed premium of 50 percent for overtime hours worked be paid, does not prohibit paying more.'' 29 CFR 778.114(c). The NPRM proposed non-substantive edits to this language for readability. *See* 84 FR at 59602 (''Where the conditions for the use of the fluctuating workweek method of overtime payment are present, the Act, in requiring that 'not less than' the prescribed premium of 50 percent for overtime hours worked be paid, does not prohibit paying more.'').

In its comment, the WHDI stated that, under the fluctuating workweek method, the regular rate varies from week to week based on the number of hours worked, thereby requiring employers to calculate the amount that they owe in overtime premiums each week. WHDI asserted that employers can avoid having to recompute the regular rate each week if they simply divide the employee's salary (plus any other compensation that must be included in the regular rate) by 40 and then pay one-half the resulting rate for each overtime hour worked. WHDI stated that the Department's proposed regulatory text in § 778.114(c) ''confuse[d] matters'' by implying that employers can pay more than half the regular rate in overtime compensation only ''[w]here the conditions for the use of the fluctuating workweek method of overtime payment are present.'' 84 FR at 59602. WHDI thus requested that the Department clarify that there are no ''legal prerequisites'' to paying more than the amount of overtime compensation required by the Act.

Pursuant to the FLSA, in a workweek that exceeds 40 hours, an employee is entitled to be compensated at his or her regular rate for all hours worked (*i.e.,* straight time) and to receive an overtime premium (*i.e.,* overtime) of at least one half the regular rate for the hours worked in excess of 40. *See* 29 U.S.C. 207(a). The combination of straight time and overtime equals the one and one-half time overtime pay required by section 7 of the FLSA. *See id.* Therefore, to the extent that an employer has already paid straighttime compensation for all hours worked, the employer's resulting overtime obligation is only an additional half of the regular rate for the hours worked in excess of 40 in the workweek.

As noted by WHDI, in an overtime week, an employer using the fluctuating workweek method will always exceed its FLSA overtime obligation if it calculates the regular rate based on 40 hours worked (rather than the higher number of hours actually worked) and pays the half-time overtime premium on that basis. *See, e.g.,* FLSA Opinion Letter, 2002 WL 32255314 (Oct. 31, 2002); FLSA Opinion Letter, 1986 WL 1171085 (Feb. 10, 1986). It is the Department's longstanding position that employers are always permitted to pay more in overtime premiums than required by the FLSA. The regulatory text at issue in revised § 778.114(c) simply states that this principle is true in the fluctuating workweek context and does not impose any pre-conditions for paying more in overtime compensation than required by law. *See* 84 FR at 59602.

E. Other Comments

The Department received a number of comments that were not directed to a specific part of the proposed rule. These comments are addressed below.

The American Horse Council and the National Thoroughbred Racing Association requested guidance regarding how a bonus for a period that spans multiple workweeks should be allocated to those workweeks for the purpose of regular rate computation. The WFCA also requested that WHD give employers the choice of either allocating such a bonus to the week in which it is paid or to spread the bonus amount evenly across the covered workweeks (*i.e.,* the period the bonus was earned). However, bonus allocation for the purpose of regular rate computations is not within the scope of the proposed regulation. Instead, WHD's regulations at 29 CFR 778.209 address how bonuses should be allocated for all methods of regular rate computation, including the fluctuating workweek method. Section 778.209 provides that, where possible, a bonus ''*must* be apportioned back over the workweeks of the period during which it may be said to have been earned.'' 29 CFR 778.209(a) (emphasis added). If such apportionment is not possible, ''some other reasonable and equitable method of allocation must be adopted.'' 29 CFR 778.209(b). Accordingly, a bonus earned over a longer period may not be allocated solely to the workweek in which it was paid.

The WFCA requested WHD to clarify that that ''preannouncement of possible bonuses should not make a bonus nondiscretionary and therefore included in the regular rate.'' However, the principles that govern whether a bonus is or is not discretionary, and therefore excludable from the regular rate, are the same whether an employer is using the fluctuating workweek method or some other method of determining the regular rate. These principles are found in the Department's regulations at § 778.211, which provides that ''if an employer announces to his employees in January that he intends to pay them a bonus in June, he has thereby abandoned his discretion regarding the fact of payment by promising a bonus to his employees. Such a bonus would not be excluded from the regular rate under section 7(e)(3)(a).'' This language is clearly inconsistent with the WFCA's request. The preamble to WHD's recent Regular Rate final rule, published on December 16, 2019, provides further discussion of the distinction between discretionary and non-discretionary bonuses, with examples of discretionary bonuses common in the workplace, which may also provide employers with helpful guidance on this issue. *See* 84 FR at 68754–56.

The National Newspaper Association requested that the Department add a provision in the revised regulation that ''permit[s] the fluctuating work 'week' to be calculated on a biweekly or monthly basis commensurate with the pay periods in many small businesses [to] allow newspaper employers some needed flexibility.'' The FLSA expressly requires employers to pay overtime compensation for any ''workweek longer than forty hours.'' 29 U.S.C. 207(a). As such, the regular rate—which is necessary to determine overtime compensation owed—must also be calculated on a weekly basis. *See* 29 CFR 778.104 (''The Act takes a single workweek as its standard and does not permit averaging of hours over 2 or more weeks.'').

Several commenters urged WHD to state in the final rule that the fluctuating workweek method may be used to compute back wages in failed exemption cases. The commenters explained that, in such cases, an employer may have classified a salaried employee as exempt under the FLSA but it is later determined that such employee is in fact nonexempt (*e.g.,* because he or she is found to have performed nonexempt duties). In such cases, courts must determine how to calculate back wages for the salaried employees. Attorney Daniel Abrahams requested that the Department's final rule expressly state, consistent with the weight of the case law, that back wages in such cases may be calculated using the fluctuating workweek method.[23]

[23] Many courts have permitted back wages in failed exemption cases to be calculated by using the fluctuating workweek method, although courts are divided as to whether the authority to apply the method is based on the retroactive application of § 778.114 itself or instead arises directly from the Supreme Court's *Missel* decision. *See, e.g., Black* v. *Settlepou, P.C.,* 732 F.3d 492, 496–98 (5th Cir.

Continued

Other commenters, such as Fisher Phillips and the WHDI, similarly requested that the Department clarify that, while the fluctuating workweek method may be used to calculate back wages in misclassification cases, the specific requirements set forth in § 778.114 do not apply to such back wage computations and instead are applicable only to the use of the fluctuating workweek method as a payroll practice.

The Department agrees with the general observation by Fisher Phillips and WHDI that the specific conditions set forth in § 778.114 (*e.g.,* the clear and mutual understanding requirement) are intended to govern the use of the fluctuating workweek method as a *prospective* payroll practice. *See, e.g., Lamonica,* 711 F.3d at 1311; *Urnikis-Negro,* 616 F.3d at 678 (explaining that 29 CFR 778.114 ''on its face is not a remedial measure. It says nothing about how a court is to calculate damages where, as here, the employer has breached its obligation to pay the employee an overtime premium. Its focus instead is on how an employer may comply with its statutory obligations in the first instance and avoid liability for breach of those obligations.''). Accordingly, the Department declines to opine in this final rule on the permissibility of using the fluctuating workweek method to retroactively calculate back wages in failed exemption cases. The Department does not believe it would be appropriate, in the context of this rulemaking, to discuss the method of back wage calculation that courts should use in litigation involving failed exemption status, which necessarily involves fact-specific determinations and analysis. The NPRM did not specifically address back wage computations for misclassification cases, and the Department declines to do so in the final rule. As the Department has explained elsewhere in this preamble, however, to the extent that an employer has paid straight time compensation for all hours worked in the workweek, the employer's resulting overtime obligation under the Act is only an additional half of the regular rate for the hours worked in excess of 40 in the workweek. This general FLSA principle applies regardless of whether the specific compensation scheme at issue satisfies the technical requirements of § 778.114.

IV. Paperwork Reduction Act

The Paperwork Reduction Act of 1995 (PRA), 44 U.S.C. 3501 *et seq.,* and its attendant regulations, 5 CFR part 1320, require the Department to consider the agency's need for its information collections and their practical utility, the impact of paperwork and other information collection burdens imposed on the public, and how to minimize those burdens. This final rule does not require a collection of information subject to approval by the Office of Management and Budget (OMB) under the PRA, or affect any existing collections of information. The Department did not receive any comments on this determination.

V. Executive Order 12866; Regulatory Planning and Review; and Executive Order 13563, Improved Regulation and Regulatory Review

A. Introduction

Under E.O. 12866, OMB's Office of Information and Regulatory Affairs (OIRA) determines whether a regulatory action is significant and therefore, subject to the requirements of the E.O. and OMB review. Section 3(f) of E.O. 12866 defines a ''significant regulatory action'' as an action that is likely to result in a rule that (1) has an annual effect on the economy of $100 million or more, or adversely affects in a material way a sector of the economy, productivity, competition, jobs, the environment, public health or safety, or state, local, or tribal governments or communities (also referred to as economically significant); (2) creates serious inconsistency or otherwise interferes with an action taken or planned by another agency; (3) materially alters the budgetary impacts of entitlement grants, user fees, or loan programs, or the rights and obligations of recipients thereof; or (4) raises novel legal or policy issues arising out of legal mandates, the President's priorities, or the principles set forth in the E.O. As described below, this final rule is economically significant. The Department has prepared a Regulatory Impact Analysis (RIA) in connection with this rule, as required under section 6(a)(3) of Executive Order 12866, and OMB has reviewed the rule.

Executive Order 13563 directs agencies to propose or adopt a regulation only upon a reasoned determination that its benefits justify its costs; the regulation is tailored to impose the least burden on society, consistent with achieving the regulatory objectives; and in choosing among alternative regulatory approaches, the agency has selected those approaches that maximize net benefits. Executive Order 13563 recognizes that some benefits are difficult to quantify and provides that, where appropriate and permitted by law, agencies may consider and discuss qualitatively values that are difficult or impossible to quantify, including equity, human dignity, fairness, and distributive impacts.

B. Overview of the Rule and Potential Affected Employees

This rule clarifies that bonuses, premiums, and any other supplemental payments are compatible with the fluctuating workweek method of calculating overtime pay. Prior to this rule, legal uncertainty regarding the compatibility of supplemental pay with the fluctuating workweek method deterred employers from making such payments to employees paid under the fluctuating workweek method. Employers were also deterred from paying employees under the fluctuating workweek method if they regularly paid bonuses and premiums. This rule will eliminate this deterrent effect, and thereby permit employers who compensate their employees under the fluctuating workweek method to pay employees a wider range of supplemental pay.

This rule makes clear to employers that employees paid under the fluctuating workweek method are eligible for all supplemental payments. As in the NPRM, in order to estimate the impact of this rule, the Department relied on data from the Current Population Survey (CPS) to estimate a total pool of employees who could possibly be affected.[24] In particular, the Department focused on full-time, nonexempt workers who report earning a fixed salary. The Department's regulations recognize only two ways that an FLSA-covered employer may pay a nonexempt employee a fixed salary.[25] First, under 29 CFR 778.113,

2013) (applying fluctuating workweek method to computation of back wages based on *Missel*); *Lamonica* v. *Safe Hurricane Shutters, Inc.,* 711 F.3d 1299, 1310–11 (11th Cir. 2013) (same); *Urnikis-Negro* v. *Am. Family Prop. Servs.,* 616 F.3d 665, 676–84 (7th Cir. 2010) (same); *Clements,* 530 F.3d at 1230–31 (applying § 778.114 to retroactively calculate back pay); *Valerio,* 173 F.3d at 39–40 (affirming district court's retroactive application of section 778.114).

[24] The CPS is a monthly survey of about 60,000 households that is jointly sponsored by the U.S. Census Bureau and BLS. Households are surveyed for four months, excluded from the survey for eight months, surveyed for an additional four months, and then permanently dropped from the sample. During the last month of each rotation in the sample (month 4 and month 16), employed respondents complete a supplementary questionnaire in addition to the regular survey.

[25] Under either method of salary payment, the employee is entitled to overtime premium pay of at least one and one-half times the regular rate. However, the method of calculating the overtime

the employer may pay a salary for a *specific number* of hours each week. For the purpose of this analysis, the Department assumes that a nonexempt worker paid under 29 CFR 778.113 would likely report having a ''usual'' number of hours worked in the CPS. Second, under 29 CFR 778.114, the employer pays a salary for *whatever number* of hours are worked—this is the fluctuating workweek method. For the purpose of this analysis, the Department assumes that a nonexempt worker paid under the fluctuating workweek method generally would not report having a ''usual'' number of hours worked each week, but rather would report working hours that ''vary'' from week to week. The Department estimated the number of such workers who could be compensated using the fluctuating workweek method by counting CPS respondents who (1) are employed at a FLSA-covered establishment; (2) are nonexempt from FLSA overtime obligations; (3) work full time at a single job; (4) reside in the District of Columbia or a state that permits the use of the fluctuating workweek method, (5) are paid on a salary basis; and (6) work hours that ''vary'' from week to week.[26] The Department calculated that 721,656 workers satisfy all these criteria based on 2018 CPS data. These workers are generally eligible to be paid under the fluctuating workweek method, but the Department lacks specific data as to how many are actually paid that way.

Using this group of workers to estimate the fluctuating workweek population may overstate the number of employees paid under the fluctuating workweek method because not all nonexempt and full-time CPS respondents who report earning a salary for working hours that ''vary'' from week to week are paid under the fluctuating workweek method. Some such respondents may actually be paid a salary for a specific number of hours under § 778.113, despite working fluctuating hours, and so classifying them as employees paid under the fluctuating workweek method would result in over-counting. Such an estimate may also undercount the number of employees paid under the fluctuating workweek method because the Department's methodology excludes all CPS respondents with ''usual'' hours from counting as an employee paid under the fluctuating workweek method. But an employee who works a ''usual'' number of hours may still be paid under the fluctuating workweek method if there is some weekly variation in the number of hours worked. Indeed, relying on 2018 CPS data, the Department estimates that an additional 675,130 nonexempt, full-time, and salaried workers report having a ''usual'' number of hours but routinely work hours that differ from that ''usual'' number. These additional workers are also eligible to be paid under the fluctuating workweek method, but the Department lacks data as to how many are actually paid that way.

All together, the total number of workers the Department estimates who may currently be paid under the fluctuating workweek method is about 1.4 million (721,656 workers who report their hours vary plus 675,130 workers who report having a ''usual'' number of hours but who work hours that differ from that number). The Department lacks data to determine how prevalent this compensation method actually is amongst this group.[27] Without data on the precise number, and for purposes of this illustrative analysis, the Department assumes that *half* of these workers are currently being paid using the fluctuating workweek method, meaning 698,393 workers could become eligible for a wider range of supplemental payments. The actual number may be higher or lower.

This rule may also encourage some employers to switch their employees who are currently paid on an hourly basis to the fluctuating workweek method. The Department believes legal confusion over the last fifteen years, exacerbated by the 2011 final rule, likely caused some employers to stop using the fluctuating workweek method to compensate employees, and instead pay them on an hourly basis.[28] The Department applied the same estimation methodology it used to approximate the current number of employees paid under the fluctuating workweek method to approximate the number of such employees in previous years—going back to 2004—using CPS data from those years.[29]

In the NPRM, the Department noted that the estimated percentage of U.S. workers compensated under the fluctuating workweek method declined from 0.83 percent in 2004 to 0.45 percent in 2018. At least some portion of this decline likely may be attributed to the legal uncertainty discussed in greater detail above, but some may be attributable to unrelated causes.[30]

One commenter noted concerns with the Department's finding that the decline in workers compensated under the fluctuating workweek method is due in part to legal uncertainty. EPI claimed that this finding is based on an unjustified assumption that the share of workers who are paid under the fluctuating workweek method out of all the workers who *might* be paid under the fluctuating workweek method remains constant at 50 percent over this period. But other commenters, such as SHRM and the Chamber, indicated that uncertainty did affect negatively the number of workers paid under the fluctuating workweek method. Because the Department lacks counts for the precise number of workers paid under the fluctuating workweek method, this analysis merely assumes that half the workers whose characteristics make them not only eligible, but whose hours and earnings data appear similar to what would be expected under the fluctuating workweek, are actually compensated under the fluctuating workweek method. The Department acknowledges that this share could fluctuate over this or any period, and that there are other factors, beyond confusion created by legal uncertainty, that could be responsible for the decline in the share of the labor force compensated under the fluctuating workweek method, and thus does not include workers who might be ''switched'' to the fluctuating workweek method in its quantified cost savings analysis.

For example, the Department recognizes that the total number of nonexempt FLSA full-time salaried workers decreased both in total number

due differs because of the difference in what the salary payment is intended to cover.

[26] Currently, four states generally prohibit the use of the fluctuating workweek method under state law: Alaska, California, Pennsylvania, and New Mexico. *See* 8 Alaska Admin. Code section 15.100(d)(3); Cal. Labor Code section 515(d); *Chevalier* v. *Gen. Nutrition Ctrs., Inc.,* No. 22 WAP 2018, 2019 WL 6139547 (Pa. Nov. 20, 2019); *N.M. Dep't of Labor* v. *Echostar Commc'ns Corp.,* 134 P.3d 780, 783 (N.M. Ct. App. 2006).

[27] The Department received comments with anecdotal information about the prevalence of the fluctuating workweek method. For example, the National Newspaper Association surveyed their member publishers, and found that 11 percent are presently shifting additional employees to the fluctuating workweek method. And Attorney C. Andrew Head indicated that he has represented more than 20,000 fluctuating workweek employees in his litigation practice. While these comments do not provide enough data for the Department to add precision to its illustrative cost-savings estimates, they do indicate that there is significant use of the FWW method by at least some employers, and give the Department more confidence that the economic effects of this rule likely will be significant, even if they cannot be precisely measured.

[28] The Department believes that few employers would have switched employees from the fluctuating workweek method to a fixed salary for a specific number of hours under § 778.113 because those employees would have, by definition, worked hours that varied from week to week.

[29] The Department lacks the required CPS data from before 2004.

[30] *Compare, e.g., Wills,* 981 F. Supp. 2d at 256, *with Sisson,* 2013 WL 945372, at *1.

and also as a share of the employee population over this same period.[31] The Department further assumes that some employers who switched their employees away from the fluctuating workweek method due to legal uncertainty would be likely to switch those employees back to the fluctuating workweek. However, the Department lacks sufficient information to estimate the precise number of ''switchers'' due to elimination of legal uncertainty.

C. Costs

As stated in the proposed rule, the Department believes that, because the rule merely lifts a restriction on employers paying bonuses and other supplemental payments to employees paid under the fluctuating workweek method, the only likely costs attributable to this rulemaking are regulatory familiarization costs, which represent direct costs to businesses associated with reviewing changes to regulatory requirements caused by the rule. Familiarization costs do not include recurring compliance costs that regulated entities would incur with or without a rulemaking. The Department calculated regulatory familiarization costs by multiplying the estimated number of establishments likely to review the rule by the estimated time to review the rule and the average hourly compensation of a Compensation, Benefits, and Job Analysis Specialist. The Department did not receive any comments about additional costs associated with this rulemaking.

To calculate costs associated with reviewing the rule, the Department first estimated the number of establishments likely to review the rule. The most recent data on private sector establishments at the time this final rule was drafted are from the 2016 Statistics of U.S. Businesses (SUSB), which reports 7.8 million establishments with paid employees.[32]

The Department believes that each of the 7.8 million establishments will review the rule. All employers will give the rule a cursory review, lasting no more than five minutes, to determine if they need to comply with the rule. Most employers will not spend any more time on the rule, because they do not have any employees compensated under the fluctuating workweek method. Additionally, the Department believes that employers currently using or interested in using the fluctuating workweek method to pay workers will give the rule a more detailed review. The Department estimates that 698,393 workers are paid under the fluctuating workweek method, based on the 2018 CPS data. The Department uses this number to help estimate the number of establishments who will spend more time reviewing the rule. As previously discussed, the Department lacks data to identify the specific employers or employees who may switch to the fluctuating workweek method given the new legal clarity, but estimates, for purposes of this cost analysis, that employers will switch additional employees to being paid under the fluctuating workweek method. This entire pool is approximately 0.45 percent of the 155.8 million workers in the United States. By assuming these workers are proportionally distributed among the 7.8 million establishments, the Department estimates approximately 35,100 establishments pay or are interested in paying employees using the fluctuating workweek method, and therefore would review the rule in greater detail. Because the rule is a clarification of the interaction between the fluctuating workweek method and supplemental payments, the Department estimates it would take an average of 30 additional minutes (on top of the five minutes spent on an initial review) for each of these employers to review and understand the rule. Some might spend more than 30 additional minutes reviewing the rule, while others might take less time; the Department believes that 30 minutes is a reasonable estimated average for all interested employers in light of the rule's simplicity.

Next, the Department estimated the hourly compensation of the employees who would likely review the rule. The Department assumes that a Compensation, Benefits, and Job Analysis Specialist (Standard Occupation Classification 13–1141), or an employee of similar status and comparable pay, would review the rule at each establishment. The median hourly wage of a Compensation, Benefits, and Job Analysis Specialist is $30.29.[33] The Department adjusted this base wage rate to reflect fringe benefits such as health insurance and retirement benefits, as well as overhead costs such as rent, utilities, and office equipment. The Department used a fringe benefits rate of 46 percent of the base rate and an overhead rate of 17 percent of the base rate, resulting in a fully loaded hourly compensation rate for Compensation, Benefits, and Job Analysis Specialists of $49.37 = ($30.29 + ($30.29 × 46%) + ($30.29 × 17%)).[34]

The Department estimates one-time regulatory familiarization costs in Year 1 of $32.8 million (= 35,100 establishments × 0.5 hours of review time × $49.37 per hour + 7.8 million establishments × 0.083 hours of review time × $49.37 per hour). This rule does not impose any new requirements on employers or require any affirmative measures for regulated entities to come into compliance; therefore, there are no other costs attributable to this rule. The Department acknowledges that employers who do switch to the fluctuating workweek method may encounter adjustment costs as they make changes to their payroll systems. These costs were not captured here; however, because employers are not required to change their payment method (*i.e.,* their choice to switch is voluntary), and the Department assumes employers will make economically rational decisions, then such costs would reasonably be expected to be less than employers' combined cost savings.

D. Cost Savings

The Department believes that this rule could lead to three categories of potential cost savings: (1) The elimination of opportunity costs for previously forgone activities; (2) reduced management costs for non-hourly employees; and (3) reduced legal costs for employers. The Department uses the assumptions previously discussed in this analysis to develop illustrative estimates of cost savings. Based on these estimates, the Department believes total cost savings are likely to exceed regulatory familiarization costs.

First, the rule could eliminate some of the opportunity costs in lost productivity resulting from employers' current inability to offer supplemental incentive pay to employees compensated under the fluctuating workweek method.[35] Legal uncertainty

[31] From approximately 27.0 million in 2004 to 19.2 million in 2018.

[32] U.S. Census Bureau, 2016 Statistics of U.S. Businesses (SUSB) Annual Data Tables by Establishment Industry, *https://www.census.gov/data/tables/2016/econ/susb/2016-susb-annual.html.*

[33] Bureau of Labor Statistics, May 2018 National Occupational Employment and Wage Estimates, United States, *https://www.bls.gov/oes/current/oes_nat.htm.*

[34] The benefits-earnings ratio is derived from BLS's Employer Costs for Employee Compensation data using variables CMU1020000000000D and CMU1030000000000D.

[35] ''[C]ost savings should include the full opportunity costs of the previously forgone activities.'' Office of Management and Budget, ''Guidance Implementing Executive Order 13771, Titled 'Reducing Regulation and Controlling Regulatory Costs,'" Apr. 5, 2017, *https://www.whitehouse.gov/sites/whitehouse.gov/files/omb/memoranda/2017/M-17-21-OMB.pdf.* Some economists refer to this amount as deadweight loss or ''the sum of consumer and producer surplus.'' *Id.*

regarding the compatibility of such pay with the fluctuating workweek method prevents employers and employees from entering into certain mutually beneficial exchanges. For instance, an employer using the fluctuating workweek method could not offer supplemental incentive pay in exchange for performing undesirable duties. *See Dacar,* 914 F.3d at 926 (extra pay for ''offshore'' inspections invalidates fluctuating workweek method). The prohibition against such beneficial exchanges imposes economic costs, and the rule would eliminate such costs.

In the NPRM, the Department evaluated the potential scope of opportunity costs as the economic value of supplemental incentive pay prevented by current legal uncertainty. The Department assumed that employers currently follow the holdings of an increasing number of courts on the compatibility between supplemental payments and the fluctuating workweek method. These courts have held that productivity based payments, such as commissions, are compatible with the fluctuating workweek method. *See Lalli,* 814 F.3d at 8. The Department therefore assumes employers are not currently deterred from paying productivity based bonuses and premiums to employees under the fluctuating workweek method.[36] On the other hand, some courts have held, and the 2011 preamble may have led employers to believe, that shift differentials and hours-based payments—such as payments for holiday hours and hours spent working offshore—are not compatible with the fluctuating workweek method. *See Dacar,* 914 F.3d at 926. The Department believes that employers were deterred from making these types of payments to employees paid under the fluctuating workweek method. Finally, the Department believes legal uncertainty further deters employers from making supplemental payments that are neither productivity-based nor hours-based. This includes, for example, retention bonuses, referral bonuses, and safety bonuses that BLS categorizes as ''nonproduction bonuses.''[37]

The Department lacks sufficient data to estimate the precise deadweight loss attributable to legal uncertainty, including the economic value of work that fluctuating workweek employees do not perform because their employers cannot provide certain supplemental pay. With the publication of the NPRM, the Department published an appendix, which contained a detailed illustrative analysis regarding possible ranges of potential opportunity cost eliminated and the critical variables upon which these estimates depend. The appendix illustrated that even if 70,000 workers who presently are compensated under the fluctuating workweek method—*i.e.,* one-tenth of the Department's estimate of 698,393—receive supplemental pay equal to approximately one-third the national average of shift differential and nonproduction bonuses for work not presently performed, the full annual opportunity cost of lost productivity that the proposed rule would eliminate could exceed $60 million.[38] And if all workers compensated under the fluctuating workweek method received such a bonus, the productivity savings from the elimination of this opportunity cost would exceed $600 million. The Department received comments from some employers indicating that the proposed change would result in more bonuses being paid to workers, but those comments did not discuss the magnitude of such bonuses. The Department received no comments or data specifically addressing the estimates presented in the appendix, and has ultimately decided to continue to include those in the final analysis for illustrative purposes only. The table below reflects the range of potential cost savings that were included in the Appendix to the NPRM.[39]

TABLE 1—OPPORTUNITY COST ELIMINATED

		Scenario 1	Scenario 2
		1% Suppl. pay	2% Suppl. pay
Scenario A	349,192 Workers	$305,121,551	$610,243,103
Scenario B	174,596 Workers	152,560,776	305,121,551
Scenario C	69,838 Workers	61,024,310	122,048,621

Second, the rule could reduce management costs for any employers that switch employees from hourly pay to the fluctuating workweek method. As explained above, the Department believes legal uncertainty caused some employers to stop paying employees using the fluctuating workweek method, and instead to pay them on an hourly basis. SHRM affirmed this belief in their comment, saying, ''The Department's statement in the 2011 Final Rule preamble that the payment of any compensation in addition to the salary payment somehow 'invalidated' the fluctuating workweek method caused many employers to either (1) eliminate bonuses for employees paid pursuant to the fluctuating workweek method; or (2) pay previously salaried employees an hourly rate (and continue any bonus programs).'' Since overtime pay premiums for hourly employees who do not receive supplemental pay are constant (*i.e.,* their regular rate does not decrease as more overtime hours are worked), these employers may incur increased managerial costs because they may spend more time developing work schedules and closely monitoring an employee's hours to minimize or avoid overtime pay. For example, the manager of an hourly worker may have to assess whether the marginal benefit of scheduling the worker for more than 40 hours exceeds the marginal cost of paying the overtime based on the higher hourly rate. But such assessment is less necessary for an employee paid under the fluctuating workweek method because the marginal cost to an employer of each hour of work under the fluctuating workweek is lower than

[36] The Department understands that this assumption may not perfectly reflect reality because many employers using the fluctuating workweek method may presently be deterred from paying any bonus or premium, even production based bonuses and premiums, especially outside of jurisdictions in which such supplemental pay have been expressly held to be compatible with the fluctuating workweek method. By assuming all employers are paying production bonuses despite this concern, the Department's illustrative estimate may be understating the economic cost of current legal uncertainty.

[37] Bureau of Labor Statistics, Fact Sheet for the June 2000 Employment Cost Index Release (2000), at 1, *https://www.bls.gov/ncs/ect/sp/ecrp0003.pdf.* As the name implies, nonproduction bonuses do not include productivity based pay, such as commissions, that courts generally find to be compatible with the fluctuating workweek method.

[38] BLS estimates that average hourly shift differential and nonproduction bonuses are 3.4% of hourly pay and the 698,393 workers that the Department estimates are paid under the fluctuating workweek method earn an average annual salary of $49,282.

[39] *See* 84 FR 59601 (Nov. 5, 2019).

the marginal cost of an hourly employee.[40]

There was little precedent or data to aid in evaluating these managerial costs, and the Department did not receive any comments about this cost savings. With the exception of the 2016 and 2019 overtime rulemaking efforts, the Department has not estimated managerial costs of avoiding overtime pay. *See* 81 FR 32391, 32477 (May 23, 2016); 84 FR 10900, 10932 (Mar. 29, 2019). Nor has the Department found such estimates after reviewing the literature. The Department therefore refers to the methodology used in the 2019 overtime rulemaking to produce a qualitative analysis of potential additional cost savings.

Under the overtime rulemaking methodology, the Department assumed a manager spends ten minutes per week scheduling and monitoring a newly exempt employee to avoid or minimize overtime pay. And employers may be able to avoid at least some of this effort if the employee were instead paid under the fluctuating workweek method because the marginal cost of each additional hour of work would be lower than an hourly employee. While the Department does not estimate the precise number of hourly workers whose employers would switch from paying hourly pay to the fluctuating workweek method following this rule, the Department believes that management costs may be reduced for every worker who is switched because their managers can spend less time managing their schedules if such schedule management is intended either to optimize compensation levels or to ensure coverage for less desirable shifts or projects. If, hypothetically, 150,000 workers were switched, employers might reduce their annual managerial costs by over $66 million.[41]

Third, the clarifying language and updated examples included in this rule may reduce the amount of time employers spend attempting to understand their obligations under the law, after an initial one-time rule familiarization. For example, employers interested in offering supplemental payments to employees compensated under the fluctuating workweek method would know immediately from the language in § 778.114 that such payments will be compatible with the fluctuating workweek method, thereby obviating further legal research and analysis on the issue. The Department does not have data to estimate the precise amount of cost savings attributable to reduced need for legal research and analysis, and instead provides an example to illustrate the potential for such savings.

If the additional legal clarity reduces the annual amount of legal review by just one hour for each employer that pays or is interested in paying employees using the fluctuating workweek method, the Department calculates potential cost savings of up to $3.3 million.[42] The Department obtained this illustrative estimate by first calculating the hourly cost of a lawyer (Standard Occupation Classification 23–1011). The median wage of a lawyer is $58.13,[43] and the Department adjusted this to $94.75 per hour to account for fringe benefits and overhead.[44] The fully-loaded hourly compensation rate of $94.75 is then multiplied by the 35,100 establishments that the Department estimates pay or may be interested in paying employees using the fluctuating workweek method, resulting in $3.3 million per year.[45] As noted above, this figure is an illustrative example of potential annual cost savings due to reducing legal-review burdens.

Even though the Department cannot quantify the precise amount of total cost savings, it is expected that they will significantly outweigh regulatory familiarization costs. Unlike one-time familiarization costs, the calculated and other potential cost savings described in this section would continue into the future, saving employers valuable time and resources. This rule also offers increased flexibility to employers in the way that they compensate their employees. However, in the absence of additional data, the Department is unable to precisely quantify all cost savings and other potential effects of the proposed rule.

E. Transfers

Transfer payments occur when income is redistributed from one party to another. The Department believes this rule may cause transfer payments to flow from some employers to their employees and also may cause transfer payments to flow from employees to some employers. When discussing these transfers in the NPRM, the Department noted that the incidence, magnitude, and ultimate beneficiaries of such transfers is unknown.

The Department expects some employers may begin to use other types of supplemental pay, including nonproduction bonuses and shift differentials, to incentivize employees to perform economically valuable tasks. If employers offer these new bonuses to employees already paid under the fluctuating workweek method, it would constitute a transfer from employers to employees.

Some commenters argued that employers will reduce their employees' salaries paid under the fluctuating workweek and shift compensation to non-guaranteed bonuses, essentially reducing some of that employer's workers' earnings. *See e.g.,* EPI, State Attorneys General, Head Law Firm, IAFF, NELA. The commenters assume that employers look only to lower their labor costs, and if they can use bonuses in conjunction with the fluctuating workweek method to pay less for overtime, they are likely to do so. If such a shift were to occur, if the scope of such a shift in comparison to the current fluctuating workweek wage is large, and if bonuses were small, the commenters claim this reduction could constitute a transfer from employees to employers. These comments do not cite any data to show the opposite effect from the 2011 perceived prohibition on paying certain bonuses, nor do they cite data to indicate that employers who pay their employees under the fluctuating workweek method would be willing to risk a drastic downward change in total compensation.

The Department acknowledges that, for employees compensated under the fluctuating workweek method, an employer and employee may now agree

[40] The fluctuating workweek marginal cost for hours 2–40 in a workweek is $0, and for hours 41+, the marginal cost is only the overtime premium, while marginal costs for hourly employees during the same hours is the hourly rate plus any overtime premium for any hours over 40. Conversely, when an hourly-paid employee works less than 40 hours in a workweek, the employer is obligated to pay only the hours worked, while under the fluctuating workweek method, the employer is obligated to pay the full salary for the workweek.

[41] This illustrative analysis assumes: Ten minutes per week per worker, fifty-two weeks per year, multiplied by a hypothetical number of new employees paid under the fluctuating workweek method, multiplied by the full-loaded median hourly wage for a manager ($31.18 + $31.18(0.46) + $31.18(0.17) = $50.92). This wage is calculated as the median hourly wage in the pooled 2018/19 CPS MORG data for workers in management occupations (excluding chief executives).

[42] Although earlier in the economic analysis the Department estimates that it will take employers anywhere from 5–30 minutes to familiarize themselves with the rule, it is likely that lawyers are currently spending significantly more time annually advising their clients on issues related to the fluctuating workweek method. The lawyers need not only be familiar with the rule but must also apply the rule to specific compensation schemes used or proposed by their clients.

[43] Bureau of Labor Statistics, May 2018 National Occupational Employment and Wage Estimates, United States, *https://www.bls.gov/oes/current/oes_nat.htm*

[44] The Department used a fringe benefits rate of 46 percent of the base rate and an overhead rate of 17 percent of the base rate, resulting in a fully loaded hourly compensation rate of $94.75 = ($58.13 + ($58.13 × 0.46) + ($58.13 × 0.17)).

[45] This estimate of establishments is discussed in greater detail in the Costs section, above.

to a new allocation of compensation between the fixed salary for all hours of work, bonuses, benefits, supplemental pay, and other job perks. Some allocations could result in their salaries being augmented, but employers could also decrease the fixed portion of the employee's salary and shift compensation to bonuses and incentive pay. These are merely two of a host of allocations not discussed in the comments. However, even if the agreement could result in somewhat lower compensation, there is a limit to how much employers are able to reduce employees' total compensation. The fluctuating workweek method still requires that an employee's fixed salary be at or above the minimum wage for all hours worked, so employers are unable to reduce compensation below the minimum wage (plus overtime for all hours over 40).

This supplemental pay is also a way for employers to incentivize employees to do undesirable tasks, or work undesirable shifts. As supplemental pay may be the most efficient means to incentivize employees to perform this valuable work, many employers in such a scenario will be more than willing to pay the extra amount for these valuable services without decreasing employees' base salaries. Absent data to the contrary, the Department disagrees with commenters' assertion that permitting new bonus payments to employees paid under the fluctuating workweek method will generally result in those workers being paid less for the same or more work.

These same commenters also assert that the proposed rule will encourage the use of overtime because the fluctuating workweek regular rate of pay falls as hours increase. *See, e.g.,* EPI, State Attorneys General, NELP, IAFF, NELA, Head Law Firm. These commenters posit that the marginal cost to the employer of an hour of overtime is lower for employees who are shifted to the fluctuating workweek method and assert that this creates incentives for employers to overwork current employees instead of hiring additional staff, undermining job creation.

The Department acknowledges that this rule could encourage more employers to use the fluctuating workweek method to compensate their employees, if they previously chose not to use the fluctuating workweek method because they also wanted to provide incentive pay but believed they were not permitted to do so. However, contrary to the commenters' assertion, nothing in this rule changes the basic rules for calculating fluctuating workweek wages, including overtime. As such, any ''disincentive'' to requiring overtime work remains the same as the status quo other than the potential increase in the marginal costs attributable to newly-permitted incentive and bonus payments. Further, these commenters offered no data to support their contentions that, merely because they are now permitted to pay bonuses, employers will increase fluctuating workweek overtime hours and choose not to hire additional workers.

F. Benefits

The Department believes the rule could reduce avoidable disputes and litigation regarding the compatibility between supplemental pay and the fluctuating workweek method. As noted above, there is no uniform consensus among federal courts as to whether and what types of supplemental pay is permitted. The Department believes this uncertain legal environment generates a substantial amount of avoidable disputes and litigation. This rule will provide a simple standard that permits all supplemental pay under the fluctuating workweek method, and therefore should reduce unnecessary disputes and litigation.[46] The Department lacks data to quantify this benefit.

The Department also believes that this rule will allow employers and employees to better utilize flexible work schedules. This is especially important as workers return to work during the COVID–19 pandemic. Some employers are likely to promote social distancing in the workplace by having their employees adopt variable work schedules, possibly staggering their start and end times for the day. This rule will make it easier for employers and employees to agree to unique scheduling arrangements while allowing employees to retain access to the bonuses and premiums, including hazard pay, they would otherwise earn.

G. Summary

This rule will result in a one-time rule-familiarization cost of $32,828,582. The Department estimated average annualized costs of this rule over 10 years and in perpetuity. Over ten years, this rule would have an average annualized cost of $3.7 million at a discount rate of 3 percent, or $4.4 million at a discount rate of 7 percent in 2018 dollars. When the Department uses a perpetual time horizon to allow for cost comparisons under E.O. 13771, the perpetual annualized cost is $1,569,905 at a discount rate of 7 percent in 2016 dollars.

[46] The costs of such disputes and litigation are not insignificant, but are not estimated here nor included in the projected regulatory cost savings.

VI. Regulatory Flexibility Analysis

The Regulatory Flexibility Act of 1980 (RFA), 5 U.S.C. 601 *et seq.,* as amended by the Small Business Regulatory Enforcement Fairness Act of 1996, Public Law 104–121 (March 29, 1996), requires federal agencies engaged in rulemaking to consider the impact of their proposals on small entities, consider alternatives to minimize that impact, and solicit public comment on their analyses. The RFA requires the assessment of the impact of a regulation on a wide range of small entities, including small businesses, not-for-profit organizations, and small governmental jurisdictions. Agencies must perform a review to determine whether a proposed or final rule would have a significant economic impact on a substantial number of small entities. 5 U.S.C. 603 and 604.

This rule will not impose any new requirements on employers or require any affirmative measures for regulated entities to come into compliance. Therefore, there are no other costs attributable to this rule other than regulatory familiarization costs. As discussed above, the Department calculated the familiarization costs for both the estimated 7.8 million private establishments in the United States and for the estimated 50,064 establishments that pay or are interested in paying employees using the fluctuating workweek method. The Department estimated the one-time familiarization cost for each of the 7.8 million establishments—which would give the proposed rule a cursory review—is $4.11. And the one-time familiarization cost for each of the 35,100 establishments that employ or are interested in employing employees paid under the fluctuating workweek method—which would closely review the proposed rule—is $24.69. Estimated familiarization costs will be trivial for small business entities, and will be well below one percent of their gross annual revenues, which is typically at least $100,000 per year for the smallest businesses.

The Department believes that this rule will achieve long-term cost savings that outweigh initial regulatory familiarization costs. For example, the Department believes that clarifying the confusing fluctuating workweek regulation and adding updated examples should reduce compliance costs and litigation risks that small business entities would otherwise continue to bear. The rule will also

reduce administrative costs of small businesses that respond by switching hourly employees to the fluctuating workweek method. The rule further enables a small business to offer employees paid under the fluctuating workweek method supplemental incentive pay in exchange for certain productive behavior, such as working nightshifts or performing undesirable duties. The business will offer such supplemental pay only if the benefits of the incentivized behavior exceed the cost of payments. Because the vast majority of businesses, including small businesses, do not pay workers using the fluctuating workweek method, the Department believes such benefits will be limited to few small businesses.[47] Based on this determination, the Department certifies that the rule will not have a significant economic impact on a substantial number of small entities.

VII. Unfunded Mandate Reform Act Analysis

The Unfunded Mandates Reform Act of 1995 (UMRA), 2 U.S.C. 1532, requires that agencies prepare a written statement, which includes an assessment of anticipated costs and benefits, before proposing any federal mandate that may result in excess of $100 million (adjusted annually for inflation) in expenditures in any one year by state, local, and tribal governments in the aggregate, or by the private sector. While this rulemaking would affect employers in the private sector, it is not expected to result in expenditures greater than $100 million in any one year. Please see Section VI for an assessment of anticipated costs and benefits to the private sector.

VIII. Executive Order 13132, Federalism

The Department has reviewed this rule in accordance with Executive Order 13132 regarding federalism and determined that it does not have federalism implications. The rule will not have substantial direct effects on the states, on the relationship between the national government and the states, or on the distribution of power and responsibilities among the various levels of government.

IX. Executive Order 13175, Indian Tribal Governments

This rule will not have substantial direct effects on one or more Indian tribes, on the relationship between the Federal Government and Indian tribes, or on the distribution of power and responsibilities between the Federal Government and Indian tribes.

[47] The Department of Labor estimates that only 0.45% of U.S. workers are compensated using fluctuating workweek method.

List of Subjects in 29 CFR Part 778

Wages.

Signed at Washington, DC, this 15th day of May, 2020.

Cheryl M. Stanton,

Administrator, Wage and Hour Division.

For the reasons set out in the preamble, the Department of Labor amends title 29 of the Code of Federal Regulations part 778 as follows:

PART 778—OVERTIME COMPENSATION

■ 1. The authority citation for part 778 continues to read as follows:

Authority: 52 Stat. 1060, as amended; 29 U.S.C. 201 *et seq.* Section 778.200 also issued under Pub. L. 106–202, 114 Stat. 308 (29 U.S.C. 207(e) and (h)).

■ 2. Revise § 778.114 to read as follows:

§ 778.114 Fluctuating Workweek Method of Computing Overtime.

(a) An employer may use the fluctuating workweek method to properly compute overtime compensation based on the regular rate for a nonexempt employee under the following circumstances:

(1) The employee works hours that fluctuate from week to week;

(2) The employee receives a fixed salary that does not vary with the number of hours worked in the workweek, whether few or many;

(3) The amount of the employee's fixed salary is sufficient to provide compensation to the employee at a rate not less than the applicable minimum wage rate for every hour worked in those workweeks in which the number of hours the employee works is greatest;

(4) The employee and the employer have a clear and mutual understanding that the fixed salary is compensation (apart from overtime premiums and any bonuses, premium payments, commissions, hazard pay, or other additional pay of any kind not excludable from the regular rate under section 7(e)(l) through (8) of the Act) for the total hours worked each workweek regardless of the number of hours, although the clear and mutual understanding does not need to extend to the specific method used to calculate overtime pay; and

(5) The employee receives overtime compensation, in addition to such fixed salary and any bonuses, premium payments, commissions, hazard pay, and additional pay of any kind, for all overtime hours worked at a rate of not less than one-half the employee's regular rate of pay for that workweek. Since the salary is fixed, the regular rate of the employee will vary from week to week and is determined by dividing the amount of the salary and any non-excludable additional pay received each workweek by the number of hours worked in the workweek. Payment for overtime hours at not less than one-half such rate satisfies the overtime pay requirement because such hours have already been compensated at the straight time rate by payment of the fixed salary and non-excludable additional pay. Payment of any bonuses, premium payments, commissions, hazard pay, and additional pay of any kind is compatible with the fluctuating workweek method of overtime payment, and such payments must be included in the calculation of the regular rate unless excludable under section 7(e)(1) through (8) of the Act.

(b) The application of the principles stated above may be illustrated by the case of an employee whose hours of work do not customarily follow a regular schedule but vary from week to week, whose work hours never exceed 50 hours in a workweek, and whose salary of $600 a week is paid with the understanding that it constitutes the employee's compensation (apart from overtime premiums and any bonuses, premium payments, commissions, hazard pay, or other additional pay of any kind not excludable from the regular rate under section 7(e)(1) through (8)) for all hours worked in the workweek.

(1) *Example.* If during the course of 4 weeks this employee receives no additional compensation and works 37.5, 44, 50, and 48 hours, the regular rate of pay in each of these weeks is $16, $13.64, $12, and $12.50, respectively. Since the employee has already received straight time compensation for all hours worked in these weeks, only additional half-time pay is due for overtime hours. For the first week the employee is owed $600 (fixed salary of $600, with no overtime hours); for the second week $627.28 (fixed salary of $600, and 4 hours of overtime pay at one-half times the regular rate of $13.64 for a total overtime payment of $27.28); for the third week $660 (fixed salary of $600, and 10 hours of overtime pay at one-half times the regular rate of $12 for a total overtime payment of $60); for the fourth week $650 (fixed salary of $600, and 8 overtime hours at one-half times the regular rate of $12.50 for a total overtime payment of $50).

(2) *Example.* If during the course of 2 weeks this employee works 37.5 and 48

hours and 4 of the hours the employee worked each week were nightshift hours compensated at a premium rate of an extra $5 per hour, the employee's total straight time earnings would be $620 (fixed salary of $600 plus $20 of premium pay for the 4 nightshift hours). In this case, the regular rate of pay in each of these weeks is $16.53 and $12.92, respectively, and the employee's total compensation would be calculated as follows: For the 37.5 hour week the employee is owed $620 (fixed salary of $600 plus $20 of non-overtime premium pay, with no overtime hours); and for the 48 hour week $671.68 (fixed salary of $600 plus $20 of non-overtime premium pay, and 8 hours of overtime at one-half times the regular rate of $12.92 for a total overtime payment of $51.68). This principle applies in the same manner regardless of the reason for the hourly premium rate (*e.g.,* weekend hours).

(3) *Example.* If during the course of 2 weeks this employee works 37.5 and 48 hours and the employee received a $100 productivity bonus each week, the employee's total straight time earnings would be $700 (fixed salary of $600 plus $100 productivity bonus). In this case, the regular rate of pay in each of these weeks is $18.67 and $14.58, respectively, and the employee's total compensation would be calculated as follows: For the 37.5 hour week the employee is owed $700 (fixed salary of $600 plus $100 productivity bonus, with no overtime hours); and for the 48 hour week $758.32 (fixed salary of $600 plus $100 productivity bonus, and 8 hours of overtime at one-half times the regular rate of $14.58 for a total overtime payment of $58.32).

(c) Typically, such fixed salaries are paid to employees who do not customarily work a regular schedule of hours and are in amounts agreed on by the parties as adequate compensation for long workweeks as well as short ones, under the circumstances of the employment as a whole. Where the conditions for the use of the fluctuating workweek method of overtime payment are present, the Act, in requiring that ''not less than'' the prescribed premium of 50 percent for overtime hours worked be paid, does not prohibit paying more. On the other hand, where all the facts indicate that an employee is being paid for overtime hours at a rate no greater than that which the employee receives for nonovertime hours, compliance with the Act cannot be rested on any application of the fluctuating workweek overtime formula.

(d) The fixed salary described in paragraph (a) of this section does not vary with the number of hours worked in the workweek, whether few or many. However, employers using the fluctuating workweek method of overtime payment may take occasional disciplinary deductions from the employee's salary for willful absences or tardiness or for infractions of major work rules, provided that the deductions do not cut into the minimum wage or overtime pay required by the Act.

[FR Doc. 2020–10872 Filed 6–5–20; 8:45 am]

BILLING CODE 4510–27–P

DEPARTMENT OF HOMELAND SECURITY

Coast Guard

33 CFR Part 100

[Docket No. USCG–2020–0157]

RIN 1625–AA08

Regattas and Marine Parades; Great Lakes Annual Marine Events

AGENCY: Coast Guard, DHS.

ACTION: Notice of enforcement of regulation.

SUMMARY: The Coast Guard will enforce various special local regulations for annual regattas and marine parades in the Captain of the Port Detroit zone. Enforcement of these regulations is necessary and intended to ensure safety of life on the navigable waters immediately prior to, during, and after these regattas or marine parades. During the aforementioned period, the Coast Guard will enforce restrictions upon, and control movement of, vessels in a specified area immediately prior to, during, and after regattas or marine parades.

DATES: The regulations in 33 CFR 100.911 will be enforced at specified dates and times between July 10, 2020 and September 26, 2020.

FOR FURTHER INFORMATION CONTACT: If you have questions on this document, call or email Tracy Girard, Prevention Department, telephone (313) 568–9564, email *Tracy.M.Girard@uscg.mil.*

SUPPLEMENTARY INFORMATION:

The Coast Guard will enforce the following special local regulations listed in 33 CFR part 100, Safety of Life on Navigable Waters, on the following dates and times:

(1) *§ 100.911(a)(4) Motor City Mile, Detroit, MI.* This special local regulation will be enforced from 7 a.m. to 12 p.m. on July 10, 2020.

(2) *§ 100.911(a)(6) Roar on the River, Trenton, MI.* This special local regulation will be enforced from 10 a.m. to 6 p.m. each day from July 17, 2020 until July 19, 2020.

(3) *§ 100.911(a)(9) Detroit Hydrofest Power Boat Race, Detroit, MI.* This special local regulation will be enforced from 7 a.m. to 7 p.m. each day from August 21, 2020 until August 23, 2020.

(4) *§ 100.911(a)(10) Bay City Rock the River (formerly known as Bay City Grand Prix) Powerboat Races, Bay City, MI.* This special local regulation will be enforced from 8 a.m. to 7 p.m. July 11, 2020 and July 12, 2020. In the case of inclement weather on July 11 or July 12, 2020, this special local regulation will be enforced from 8 a.m. to 7 p.m. on July 13, 2020.

(5) *§ 100.911(a)(12) Michigan Championships Swimming Events, Detroit, MI.* This special local regulation will be enforced from 7 a.m. to 2 p.m. on September 6, 2020.

(6) *§ 100.911(a)(14) Frogtown Race Regatta, Toledo, OH.* This special local regulation will be enforced from 7 a.m. to 5 p.m. on September 26, 2020.

Special Local Regulations:

In accordance with § 100.901, entry into, transiting, or anchoring within these regulated areas is prohibited unless authorized by the Coast Guard patrol commander (PATCOM). The PATCOM may restrict vessel operation within the regulated area to vessels having particular operating characteristics.

Vessels permitted to enter this regulated area must operate at a no-wake speed and in a manner that will not endanger race participants or any other craft.

The PATCOM may direct the anchoring, mooring, or movement of any vessel within this regulated area. A succession of sharp, short signals by whistle or horn from vessels patrolling the area under the direction of the PATCOM shall serve as a signal to stop. Vessels so signaled shall stop and shall comply with the orders of the PATCOM. Failure to do so may result in expulsion from the area, a Notice of Violation for failure to comply, or both.

If it is deemed necessary for the protection of life and property, the PATCOM may terminate the marine event or the operation of any vessel within the regulated area.

In accordance with the general regulations in § 100.35 of this part, the Coast Guard will patrol the regatta area under the direction of a designated Coast Guard Patrol Commander (PATCOM). The PATCOM may be contacted on Channel 16 (156.8 MHz) by the call sign ''Coast Guard Patrol Commander.''

Under the provisions of 33 CFR 100.928, vessels transiting within the regulated area shall travel at a no-wake speed and remain vigilant for event participants and safety craft. Additionally, vessels shall yield right-of-way for event participants and event safety craft and shall follow directions given by the Coast Guard's on-scene representative or by event representatives during the event.

The ''on-scene representative'' of the Captain of the Port Detroit is any Coast Guard commissioned, warrant, or petty officer who has been designated by the Captain of the Port Detroit to act on his behalf. The on-scene representative of the Captain of the Port Detroit will be aboard either a Coast Guard or Coast Guard Auxiliary vessel. The Captain of the Port Detroit or his designated on scene representative may be contacted via VHF Channel 16.

The rules in this section shall not apply to vessels participating in the event or to government vessels patrolling the regulated area in the performance of their assigned duties.

This document is issued under authority of 33 CFR 100.35 and 5 U.S.C. 552 (a). If the Captain of the Port determines that any of these special local regulations need not be enforced for the full duration stated in this document, he may suspend such enforcement and notify the public of the suspension via a Broadcast Notice to Mariners.

Dated: May 13, 2020.

Jeffrey W. Novak,

Captain, U. S. Coast Guard, Captain of the Port Detroit.

[FR Doc. 2020–10859 Filed 6–5–20; 8:45 am]

BILLING CODE 9110–04–P

DEPARTMENT OF HOMELAND SECURITY

Coast Guard

33 CFR Part 100

[Docket Number USCG–2020–0038]

RIN 1625–AA08

Special Local Regulations; Sector Ohio Valley Annual and Recurring Special Local Regulations Update

AGENCY: Coast Guard, DHS.

ACTION: Final rule.

SUMMARY: The Coast Guard is amending and updating its special local regulations relating to recurring marine parades, regattas, and other events that take place in the Coast Guard Sector Ohio Valley area of responsibility (AOR). This rule informs the public of regularly scheduled events that require additional safety measures through the establishing of a special local regulation. Through this rulemaking the current list of recurring special local regulations is updated with revisions, additional events, and removal of events that no longer take place in Sector Ohio Valley's AOR. When these special local regulations are enforced, certain restrictions are placed on marine traffic in specified areas.

DATES: This rule is effective June 8, 2020.

ADDRESSES: To view documents mentioned in this preamble as being available in the docket, go to *https://www.regulations.gov,* type USCG–2020–0038 in the ''SEARCH'' box and click ''SEARCH.'' Click on Open Docket Folder on the line associated with this rule.

FOR FURTHER INFORMATION CONTACT: If you have questions on this rule, call or email Petty Officer Riley Jackson, Sector Ohio Valley, U.S. Coast Guard; telephone (502) 779–5347, email *Riley.S.Jackson@uscg.mil.*

SUPPLEMENTARY INFORMATION:

I. Table of Abbreviations

CFR Code of Federal Regulations
COTP Captain of the Port Sector Ohio Valley
DHS Department of Homeland Security
FR Federal Register
NPRM Notice of proposed rulemaking
§ Section
U.S.C. United States Code

II. Background Information and Regulatory History

The Captain of the Port Sector Ohio Valley (COTP) is establishing, amending, and updating its current list of recurring special local regulations codified under 33 CFR 100.801 in Table 1, for the COTP Ohio Valley zone.

On February 14, 2020, the Coast Guard published a notice of proposed rulemaking (NPRM) titled Sector Ohio Valley Annual and Recurring Special Local Regulations Update (85 FR 8499). There we stated why we issued the NPRM, and invited comments on our proposed regulatory action related to those recurring regulated areas. During the comment period that ended March 16, 2020, no comments were received.

Under 5 U.S.C. 553(d)(3), the Coast Guard finds that good cause exists for making it effective less than 30 days after publication in the **Federal Register**. Delaying the effective date of this rule would be impracticable and contrary to the public interest because immediate action is necessary to respond to the potential safety hazards associated with these marine events.

III. Legal Authority and Need for Rule

The Coast Guard is issuing this rule under authority in 46 U.S.C. 70041 (previously 33 U.S.C. 1233 The Coast Guard is amending and updating the special local regulations under 33 CFR part 100 to include the most up to date list of recurring special local regulations for events held on or around navigable waters within the Sector Ohio Valley AOR. These events include marine parades, boat races, swim events, and others. The current list under 33 CFR 100.801 requires amending to provide new information on existing special local regulations, include new special local regulations expected to recur annually or biannually, and to remove special local regulations that are no longer required. Issuing individual regulations for each new special local regulation, amendment, or removal of an existing special local regulation creates unnecessary administrative costs and burdens. This rulemaking reduces administrative overhead and provides the public with notice through publication in the **Federal Register** of the upcoming recurring special local regulations.

IV. Discussion of Comments, Changes, and the Rule

As noted above, we received no comments on our NPRM published February 14, 2020. There are no changes in the regulatory text of this rule from the proposed rule in the NPRM.

V. Regulatory Analyses

We developed this rule after considering numerous statutes and Executive orders related to rulemaking. Below we summarize our analyses based on a number of these statutes and Executive orders, and we discuss First Amendment rights of protestors.

A. Regulatory Planning and Review

Executive Orders 12866 and 13563 direct agencies to assess the costs and benefits of available regulatory alternatives and, if regulation is necessary, to select regulatory approaches that maximize net benefits. Executive Order 13771 directs agencies to control regulatory costs through a budgeting process. This rule has not been designated a ''significant regulatory action,'' under Executive Order 12866. Accordingly, this rule has not been reviewed by the Office of Management and Budget (OMB), and pursuant to OMB guidance it is exempt from the requirements of Executive Order 13771.

The Coast Guard expects the economic impact of this rule to be minimal, and therefore a full regulatory evaluation is unnecessary. This rule establishes special local regulations limiting access to certain areas under 33 CFR 100 within Sector Ohio Valley's AOR. The effect of this rulemaking will not be significant because these special local regulations are limited in scope and duration. Deviation from the special local regulations established through this rulemaking may be requested from the appropriate COTP and requests will be considered on a case-by-case basis. Broadcast Notices to Mariners and Local Notices to Mariners will inform the community of these special local regulations so that they may plan accordingly for these short restrictions on transit. Vessel traffic may request permission from the COTP Ohio Valley or a designated representative to enter the restricted areas.

B. Impact on Small Entities

The Regulatory Flexibility Act of 1980, 5 U.S.C. 601–612, as amended, requires Federal agencies to consider the potential impact of regulations on small entities during rulemaking. The term ''small entities'' comprises small businesses, not-for-profit organizations that are independently owned and operated and are not dominant in their fields, and governmental jurisdictions with populations of less than 50,000. The Coast Guard received no comments from the Small Business Administration on this rulemaking. The Coast Guard certifies under 5 U.S.C. 605(b) that this rule will not have a significant economic impact on a substantial number of small entities.

While some owners or operators of vessels intending to transit the regulated area may be small entities, for the reasons stated in section V.A above, this rule will not have a significant economic impact on any vessel owner or operator.

Under section 213(a) of the Small Business Regulatory Enforcement Fairness Act of 1996 (Pub. L. 104–121), we want to assist small entities in understanding this rule. If the rule would affect your small business, organization, or governmental jurisdiction and you have questions concerning its provisions or options for compliance, please call or email the person listed in the **FOR FURTHER INFORMATION CONTACT** section.

Small businesses may send comments on the actions of Federal employees who enforce, or otherwise determine compliance with, Federal regulations to the Small Business and Agriculture Regulatory Enforcement Ombudsman and the Regional Small Business Regulatory Fairness Boards. The Ombudsman evaluates these actions annually and rates each agency's responsiveness to small business. If you wish to comment on actions by employees of the Coast Guard, call 1–888–REG–FAIR (1–888–734–3247). The Coast Guard will not retaliate against small entities that question or complain about this rule or any policy or action of the Coast Guard.

C. Collection of Information

This rule will not call for a new collection of information under the Paperwork Reduction Act of 1995 (44 U.S.C. 3501–3520).

D. Federalism and Indian Tribal Governments

A rule has implications for federalism under Executive Order 13132, Federalism, if it has a substantial direct effect on the States, on the relationship between the National Government and the States, or on the distribution of power and responsibilities among the various levels of government. We have analyzed this rule under that Order and have determined that it is consistent with the fundamental federalism principles and preemption requirements described in Executive Order 13132.

Also, this rule does not have tribal implications under Executive Order 13175, Consultation and Coordination with Indian Tribal Governments, because it does not have a substantial direct effect on one or more Indian tribes, on the relationship between the Federal Government and Indian tribes, or on the distribution of power and responsibilities between the Federal Government and Indian tribes.

E. Unfunded Mandates Reform Act

The Unfunded Mandates Reform Act of 1995 (2 U.S.C. 1531–1538) requires Federal agencies to assess the effects of their discretionary regulatory actions. In particular, the Act addresses actions that may result in the expenditure by a State, local, or tribal government, in the aggregate, or by the private sector of $100,000,000 (adjusted for inflation) or more in any one year. Though this rule will not result in such an expenditure, we do discuss the effects of this rule elsewhere in this preamble.

F. Environment

We have analyzed this rule under Department of Homeland Security Directive 023–01, Rev. 1, associated implementing instructions, and Environmental Planning COMDTINST 5090.1 (series), which guide the Coast Guard in complying with the National Environmental Policy Act of 1969 (42 U.S.C. 4321–4370f), and have determined that this action is one of a category of actions that do not individually or cumulatively have a significant effect on the human environment. This rule involves the establishment of special local regulations related to marine event permits for marine parades, regattas, and other marine events. It is categorically excluded from further review under paragraph L(61) of Appendix A, Table 1 of DHS Instruction Manual 023–01–001–01, Rev. 1.

G. Protest Activities

The Coast Guard respects the First Amendment rights of protesters. Protesters are asked to call or email the person listed in the **FOR FURTHER INFORMATION CONTACT** section to coordinate protest activities so that your message can be received without jeopardizing the safety or security of people, places or vessels.

List of Subjects in 33 CFR Part 100

Marine safety, Navigation (water), Reporting and recordkeeping requirements, and Waterways.

For the reasons discussed in the preamble, the U.S. Coast Guard amends 33 CFR part 100 as follows:

PART 100—SAFETY OF LIFE ON NAVIGABLE WATERS

■ 1. The authority citation for part 100 continues to read as follows:

Authority: 46 U.S.C. 70041; 33 CFR 1.05–1.

■ 2. In § 100.801, revise Table 1 to read as follows:

* * * * *

TABLE 1 TO § 100.801—SECTOR OHIO VALLEY ANNUAL AND RECURRING MARINE EVENTS

Date	Event/sponsor	Ohio Valley location	Regulated area
1. 3 days—Second or third weekend in March.	Oak Ridge Rowing Association/Cardinal Invitational.	Oak Ridge, TN	Clinch River, Mile 48.5–52.0 (Tennessee).

TABLE 1 TO § 100.801—SECTOR OHIO VALLEY ANNUAL AND RECURRING MARINE EVENTS—Continued

Date	Event/sponsor	Ohio Valley location	Regulated area
2. 1 day—Third weekend in March.	Vanderbilt Rowing/Vanderbilt Invite.	Nashville, TN	Cumberland River, Mile 188.0–192.7 (Tennessee).
3. 2 days—Fourth weekend in March.	Oak Ridge Rowing Association/Atomic City Turn and Burn.	Oak Ridge, TN	Clinch River, Mile 48.5–52.0 (Tennessee).
4. 3 days—One weekend in April.	Big 10 Invitational Regatta	Oak Ridge, TN	Clinch River, Mile 48.5–52.0 (Tennessee).
5. 1 day—One weekend in April.	Lindamood Cup	Marietta, OH	Muskingum River, Mile 0.5–1.5 (Ohio).
6. 3 days—Third weekend in April.	Oak Ridge Rowing Association/SIRA Regatta.	Oak Ridge, TN	Clinch River, Mile 48.5–52.0 (Tennessee).
7. 2 days—Third Friday and Saturday in April.	Thunder Over Louisville	Louisville, KY	Ohio River, Mile 597.0–604.0 (Kentucky).
8. 1 day—During the last week of April or first week of May.	Great Steamboat Race	Louisville, KY	Ohio River, Mile 595.0–605.3 (Kentucky).
9. 3 days—Fourth weekend in April.	Oak Ridge Rowing Association/Dogwood Junior Regatta.	Oak Ridge, TN	Clinch River, Mile 48.5–52.0 (Tennessee).
10. 3 days—Second weekend in May.	Vanderbilt Rowing/ACRA Henley.	Nashville, TN	Cumberland River, Mile 188.0–194.0 (Tennessee).
11. 3 days—Second weekend in May.	Oak Ridge Rowing Association/Big 12 Championships.	Oak Ridge, TN	Clinch River, Mile 48.5–52.0 (Tennessee).
12. 3 days—Third weekend in May.	Oak Ridge Rowing Association/Dogwood Masters.	Oak Ridge, TN	Clinch River, Mile 48.5–52.0 (Tennessee).
13. 1 day—Third weekend in May.	World Triathlon Corporation/IRONMAN 70.3.	Chattanooga, TN	Tennessee River, Mile 462.7–467.5 (Tennessee).
14. 1 day—During the last weekend in May or on Memorial Day.	Mayor's Hike, Bike and Paddle.	Louisville, KY	Ohio River, Mile 601.0–604.5 (Kentucky).
15. 1 day—The last week in May.	Chickamauga Dam Swim	Chattanooga, TN	Tennessee River, Mile 470.0–473.0 (Tennessee).
16. 2 days—Last weekend in May or first weekend in June.	Visit Knoxville/Racing on the Tennessee.	Knoxville, TN	Tennessee River, Mile 647.0–648.0 (Tennessee).
17. 3 days—First weekend in June.	Outdoor Chattanooga/Chattanooga Swim Festival.	Chattanooga, TN	Tennessee River, Mile 454.0–468.0 (Tennessee).
18. 2 days—First weekend of June.	Thunder on the Bay/KDBA	Pisgah Bay, KY	Tennessee River, Mile 30.0 (Kentucky).
19. 1 day—First weekend in June.	Visit Knoxville/Knoxville Powerboat Classic.	Knoxville, TN	Tennessee River, Mile 646.4–649.0 (Tennessee).
20. 1 day—One weekend in June.	Tri-Louisville	Louisville, KY	Ohio River, Mile 600.5–604.0 (Kentucky).
21. 2 days—One weekend in June.	New Martinsville Vintage Regatta.	New Martinsville,WV	Ohio River Mile 127.5–128.5 (West Virginia).
22. 3 days—One of the last three weekends in June.	Lawrenceburg Regatta/Whiskey City Regatta.	Lawrenceburg, IN	Ohio River, Mile 491.0–497.0 (Indiana).
23. 3 days—One of the last three weekends in June.	Hadi Shrine/Evansville Shriners Festival.	Evansville, IN	Ohio River, Mile 790.0–796.0 (Indiana).
24. 3 days—Third weekend in June.	TM Thunder LLC/Thunder on the Cumberland.	Nashville, TN	Cumberland River, Mile 189.6–192.3 (Tennessee).
25. 1 day—Third or fourth weekend in June.	Greater Morgantown Convention and Visitors Bureau/Mountaineer Triathlon.	Morgantown, WV	Monongahela River, Mile 101.0–102.0 (West Virginia).
26. 1 day—Fourth weekend in June.	Team Magic/Chattanooga Waterfront Triathlon.	Chattanooga, TN	Tennessee River, Mile 462.7–466.0 (Tennessee).
27. 1 day—One day in June	Guntersville Lake Hydrofest.	Guntersville, AL	Tennessee River south of mile 357.0 in Browns Creek, starting at the AL–69 Bridge, 34°21′38″ N, 86°20′36″ W, to 34°21′14″ N, 86°19′4″ W, to the TVA power lines, 34°20′9″ N, 86°21′7″ W, to 34°19′37″ N, 86°20′13″ W, extending from bank to bank within the creek. (Alabama).
28. 3 days—The last weekend in June or one of the first two weekends in July.	Madison Regatta	Madison, IN	Ohio River, Mile 554.0–561.0 (Indiana).
29. 1 day—During the first week of July.	Evansville Freedom Celebration/4th of July Freedom Celebration.	Evansville, IN	Ohio River, Mile 790.0–797.0 (Indiana).

TABLE 1 TO § 100.801—SECTOR OHIO VALLEY ANNUAL AND RECURRING MARINE EVENTS—Continued

Date	Event/sponsor	Ohio Valley location	Regulated area
30. First weekend in July	Eddyville Creek Marina/Thunder Over Eddy Bay.	Eddyville, KY	Cumberland River, Mile 46.0–47.0 (Kentucky).
31. 2 days—One of the first two weekends in July.	Thunder on the Bay/KDBA	Pisgah Bay, KY	Tennessee River, Mile 30.0 (Kentucky).
32. 1 day—Second weekend in July.	Bradley Dean/Renaissance Man Triathlon.	Florence, AL	Tennessee River, Mile 254.0–258.0 (Alabama).
33. 1 day—Third or fourth Sunday of July.	Tucson Racing/Cincinnati Triathlon.	Cincinnati, OH	Ohio River, Mile 468.3–471.2 (Ohio).
34. 2 days—One of the last three weekends in July.	Dare to Care/KFC Mayor's Cup Paddle Sports Races/Voyageur Canoe World Championships.	Louisville, KY	Ohio River, Mile 600.0–605.0 (Kentucky).
35. 2 days—Last two weeks in July or first three weeks of August.	Friends of the Riverfront Inc./Pittsburgh Triathlon and Adventure Races.	Pittsburgh, PA	Allegheny River, Mile 0.0–1.5 (Pennsylvania).
36. 1 day—Fourth weekend in July.	Team Magic/Music City Triathlon.	Nashville, TN	Cumberland River, Mile 189.7–192.3 (Tennessee).
37. 1 day—Last weekend in July.	Maysville Paddlefest	Maysville, KY	Ohio River, Mile 408–409 (Kentucky).
38. 2 days—One weekend in July.	Huntington Classic Regatta	Huntington, WV	Ohio River, Mile 307.3–309.3 (West Virginia).
39. 2 days—One weekend in July.	Marietta Riverfront Roar Regatta.	Marietta, OH	Ohio River, Mile 171.6–172.6 (Ohio).
40. 1 day—Last weekend in July or first weekend in August.	HealthyTriState.org/St. Marys Tri State Kayathalon.	Huntington, WV	Ohio River, Mile 305.1–308.3 (West Virginia).
41. 1 day—first Sunday in August.	Above the Fold Events/Riverbluff Triathlon.	Ashland City, TN	Cumberland River, Mile 157.0–159.5 (Tennessee).
42. 3 days—First week of August.	EQT Pittsburgh Three Rivers Regatta.	Pittsburgh, PA	Allegheny River mile 0.0–1.0, Ohio River mile 0.0–0.8, Monongahela River mile 0.5 (Pennsylvania).
43. 2 days—First weekend of August.	Thunder on the Bay/KDBA	Pisgah Bay, KY	Tennessee River, Mile 30.0 (Kentucky).
44. 1 day—First or second weekend in August.	Riverbluff Triathlon	Ashland City, TN	Cumberland River, Mile 157.0–159.0 (Tennessee).
45. 1 day—One of the first two weekends in August.	Green Umbrella/Ohio River Paddlefest.	Cincinnati, OH	Ohio River, Mile 458.5–476.4 (Ohio and Kentucky).
46. 2 days—Third full weekend (Saturday and Sunday) in August.	Ohio County Tourism/Rising Sun Boat Races.	Rising Sun, IN	Ohio River, Mile 504.0–508.0 (Indiana and Kentucky).
47. 3 days—Second or Third weekend in August.	Kittanning Riverbration Boat Races.	Kittanning, PA	Allegheny River mile 42.0–46.0 (Pennsylvania).
48. 3 days—One of the last two weekends in August.	Thunder on the Green	Livermore, KY	Green River, Mile 69.0–72.5 (Kentucky).
49. 1 day—Fourth weekend in August.	Team Rocket Tri-Club/Rocketman Triathlon.	Huntsville, AL	Tennessee River, Mile 332.2–335.5 (Alabama).
50. 1 day—Last weekend in August.	Tennessee Clean Water Network/Downtown Dragon Boat Races.	Knoxville, TN	Tennessee River, Mile 646.3–648.7 (Tennessee).
51. 3 days—One weekend in August.	Pro Water Cross Championships.	Charleston, WV	Kanawha River, Mile 56.7–57.6 (West Virginia).
52. 2 days—One weekend in August.	POWERBOAT NATIONALS—Ravenswood Regatta.	Ravenswood, WV	Ohio River, Mile 220.5–221.5 (West Virginia).
53. 2 days—One weekend in August.	Powerboat Nationals—Parkersburg Regatta/Parkersburg Homecoming.	Parkersburg, WV	Ohio River Mile 183.5–285.5 (West Virginia).
54. 1 day—One weekend in August.	YMCA River Swim	Charleston, WV	Kanawha River, Mile 58.3–61.8 (West Virginia).
55. 3 days—One weekend in August.	Grand Prix of Louisville	Louisville, KY	Ohio River, Mile 601.0–605.0 (Kentucky).
56. 3 days—One weekend in August.	Evansville HydroFest	Evansville, IN	Ohio River, Mile 790.5–794.0 (Indiana).
57. 1 day—First or second weekend of September.	SUP3Rivers The Southside Outside.	Pittsburgh, PA	Monongahela River mile 0.0–3.09 Allegheny River mile 0.0–0.6 (Pennsylvania).
58. 1 day—First weekend in September or on Labor Day.	Mayor's Hike, Bike and Paddle.	Louisville, KY	Ohio River, Mile 601.0–610.0 (Kentucky).
59. 2 days—Sunday before Labor Day and Labor Day.	Cincinnati Bell, WEBN, and Proctor and Gamble/Riverfest.	Cincinnati, OH	Ohio River, Mile 463.0–477.0 (Kentucky and Ohio) and Licking River Mile 0.0–3.0 (Kentucky).

TABLE 1 TO § 100.801—SECTOR OHIO VALLEY ANNUAL AND RECURRING MARINE EVENTS—Continued

Date	Event/sponsor	Ohio Valley location	Regulated area
60. 2 days—Labor Day weekend.	Wheeling Vintage Race Boat Association Ohio/ Wheeling Vintage Regatta.	Wheeling, WV	Ohio River, Mile 90.4–91.5 (West Virginia).
61. 3 days—The weekend of Labor Day.	Portsmouth Boat Race/ Breakwater Powerboat Association.	Portsmouth, OH	Ohio River, Mile 355.5–356.8 (Ohio).
62. 2 days—One of the first three weekends in September.	Louisville Dragon Boat Festival.	Louisville, KY	Ohio River, Mile 602.0–604.5 (Kentucky).
63. 1 day—One of the first three weekends in September.	Cumberland River Compact/Cumberland River Dragon Boat Festival.	Nashville, TN	Cumberland River, Mile 189.7–192.1 (Tennessee).
64. 2 days—One of the first three weekends in September.	State Dock/Cumberland Poker Run.	Jamestown, KY	Lake Cumberland (Kentucky).
65. 3 days—One of the first three weekends in September.	Fleur de Lis Regatta	Louisville, KY	Ohio River, Mile 600.0–605.0 (Kentucky).
66. 1 day—Second weekend in September.	City of Clarksville/Clarksville Riverfest Cardboard Boat Regatta.	Clarksville, TN	Cumberland River, Mile 125.0–126.0 (Tennessee).
67. 1 day—One Sunday in September.	Ohio River Sternwheel Festival Committee Sternwheel race reenactment.	Marietta, OH	Ohio River, Mile 170.5–172.5 (Ohio).
68. 1 Day—One weekend in September.	Parkesburg Paddle Fest	Parkersburg, WV	Ohio River, Mile 184.3–188 (West Virginia).
69. 1 day—One weekend in September.	Shoals Dragon Boat Festival.	Florence, AL	Tennessee River, Mile 255.0–257.0 (Alabama).
70. 2 days—One of the last three weekends in September.	Madison Vintage Thunder	Madison, IN	Ohio River, Mile 556.5–559.5 (Indiana).
71. 1 day—Third Sunday in September.	Team Rocket Tri Club/ Swim Hobbs Island.	Huntsville, AL	Tennessee River, Mile 332.3–338.0 (Alabama).
72. 1 day—Fourth or fifth weekend in September.	Knoxville Open Water Swimmers/Bridges to Bluffs.	Knoxville, TN	Tennessee River, Mile 641.0–648.0 (Tennessee).
73. 1 day—Fourth or fifth Sunday in September.	Green Umbrella/Great Ohio River Swim.	Cincinnati, OH	Ohio River, Mile 468.8–471.2 (Ohio and Kentucky).
74. 1 day—One of the last two weekends in September.	Ohio River Open Water Swim.	Prospect, KY	Ohio River, Mile 587.0–591.0 (Kentucky).
75. 2 days—One of the last three weekends in September or the first weekend in October.	Captain Quarters Regatta	Louisville, KY	Ohio River, Mile 594.0–598.0 (Kentucky).
76. 3 days—One of the last three weekends in September or one of the first two weekends in October.	Owensboro Air Show	Owensboro, KY	Ohio River, Mile 754.0–760.0 (Kentucky).
77. 1 day—Last weekend in September.	World Triathlon Corporation/IRONMAN Chattanooga.	Chattanooga, TN	Tennessee River, Mile 462.7–467.5 (Tennessee).
78. 3 days—Last weekend of September and/or first weekend in October.	New Martinsville Records and Regatta Challenge Committee.	New Martinsville, WV	Ohio River, Mile 128–129 (West Virginia).
79. 2 days—First weekend of October.	Three Rivers Rowing Association/Head of the Ohio Regatta.	Pittsburgh, PA	Allegheny River mile 0.0–5.0 (Pennsylvania).
80. 1 day—First or second weekend in October.	Lookout Rowing Club/ Chattanooga Head Race.	Chattanooga, TN	Tennessee River, Mile 463.0–468.0 (Tennessee).
81. 3 days—First or Second weekend in October.	Vanderbilt Rowing/Music City Head Race.	Nashville, TN	Cumberland River, Mile 189.5–196.0 (Tennessee).
82. 2 days—First or second week of October.	Head of the Ohio Rowing Race.	Pittsburgh, PA	Allegheny River, Mile 0.0–3.0 (Pennsylvania).
83. 2 days—One of the first three weekends in October.	Norton Healthcare/Ironman Triathlon.	Louisville, KY	Ohio River, Mile 600.5–605.5 (Kentucky).
84. 2 days—Two days in October.	Secret City Head Race Regatta.	Oak Ridge, TN	Clinch River, Mile 49.0–54.0 (Tennessee).

TABLE 1 TO § 100.801—SECTOR OHIO VALLEY ANNUAL AND RECURRING MARINE EVENTS—Continued

Date	Event/sponsor	Ohio Valley location	Regulated area
85. 3 days—First weekend in November.	Atlanta Rowing Club/Head of the Hooch Rowing Regatta.	Chattanooga, TN	Tennessee River, Mile 463.0–468.0 (Tennessee).
86. 1 day—One weekend in November or December.	Charleston Lighted Boat Parade.	Charleston, WV	Kanawha River, Mile 54.3–60.3 (West Virginia).

* * * * *

Dated: April 3, 2020.

A.M. Beach,

Captain, U.S. Coast Guard, Captain of the Port, Sector Ohio Valley.

[FR Doc. 2020–11419 Filed 6–5–20; 8:45 am]

BILLING CODE P

DEPARTMENT OF HOMELAND SECURITY

Coast Guard

33 CFR Part 165

[Docket Number USCG–2019–0890]

RIN 1625–AA00

Safety Zone; Highway 99 Partial Bridge Replacement, Stanislaus River, Ripon, CA

AGENCY: Coast Guard, DHS.

ACTION: Temporary final rule.

SUMMARY: The Coast Guard is establishing a temporary safety zone for certain waters of the Stanislaus River. This action is necessary to provide for the safety of life on the Stanislaus River near the Highway 99 Bridge in Ripon, CA, during partial bridge replacement scheduled to occur between June 15, 2020 and November 7, 2020. This regulation prohibits persons and vessels from being in the safety zone unless authorized by the Captain of the Port San Francisco or a designated representative.

DATES: This rule is effective from 12:01 a.m. on June 15, 2020 through 11:59 p.m. on November 7, 2020.

ADDRESSES: To view documents mentioned in this preamble as being available in the docket, go to *https://www.regulations.gov,* type USCG–2019–0890 in the ''SEARCH'' box and click ''SEARCH.'' Click on Open Docket Folder on the line associated with this rule.

FOR FURTHER INFORMATION CONTACT: If you have questions on this rule, call or email LT Jennae N. Cotton, Sector San Francisco Waterways Management, U.S. Coast Guard; telephone 415–399–3585, email *SFWaterways@uscg.mil.*

SUPPLEMENTARY INFORMATION:

I. Table of Abbreviations

CFR Code of Federal Regulations
COTP Captain of the Port San Francisco
DHS Department of Homeland Security
FR Federal Register
NPRM Notice of proposed rulemaking
§ Section
U.S.C. United States Code

II. Background Information and Regulatory History

On October 18, 2019, the California Department of Transportation notified the Coast Guard that it will be conducting partial bridge replacement of the Highway 99 Bridge in Ripon, CA. In response, on March 16, 2020, the Coast Guard published an NPRM titled ''Safety Zone; Highway 99 Partial Bridge Replacement, Stanislaus River, Ripon, CA'' (85 FR 14840) proposing a safety zone around the bridge replacement to be effective from June 15, 2020 until November 7, 2020. There we stated why we issued the NPRM, and invited comments on our proposed regulatory action related to this partial bridge replacement. During the comment period that ended April 15, 2020, we received two comments.

Under 5 U.S.C. 553(d)(3), the Coast Guard finds that good cause exists for making this rule effective less than 30 days after publication in the **Federal Register**. Delaying the effective date of this rule would be impracticable because this rule is needed to protect mariners, commercial and recreational waterway users, and construction workers from the potential safety hazards associated with construction and replacement of the Highway 99 Ripon Bridge. It is necessary for this rule to be in effect when construction commences on June 15, 2020.

III. Legal Authority and Need for Rule

The Coast Guard is issuing this rule under authority in 46 U.S.C. 70034. During this bridge construction project, approximately 200 feet of the existing concrete, double-arch bridge on Southbound Highway 99 over the Stanislaus River will be demolished, removed, and replaced. Bridge construction hazards include reduced bridge clearance and the potential for falling debris, such as steel beams and other construction materials from demolition and crane operations. The COTP has determined that potential hazards associated with the Highway 99 Ripon Bridge replacement will be a safety concern for anyone within the navigable waters of the Stanislaus River around or under the bridge construction project. The purpose of this rule is to ensure the safety of vessels and mariners in the navigable waters surrounding the Highway 99 Bridge in Ripon, CA during construction.

IV. Discussion of Comments, Changes, and the Rule

As noted above, we received two comments on our NPRM published March 16, 2020. One comment identified the safety zone as a necessity to protect mariners, commercial and recreational waterway users, and construction workers during the bridge replacement, which will improve traffic conditions for an average of 112,000 vehicle transits each day. Due to hazards associated with the bridge demolition and replacement, the COTP is implementing this rule to protect members of the public in the waters of the Stanislaus River surrounding the project.

The other comment challenged the reason this rule is being enforced, asserting the rule is not for the safety of life on the navigable waters of the Stanislaus River. The Coast Guard disagrees with this comment. The Coast Guard is enforcing this rule to protect and ensure the safety of all vessels and waterway users on the waters of the Stanislaus River near Ripon, CA from to the potential hazards associated with the bridge construction project noted in section III of this rule.

There are no changes in the regulatory text of this rule from the proposed rule in the NPRM. Between 12:01 a.m. on June 15, 2020 through 11:59 p.m. on November 7, 2020, the safety zone will encompass all navigable waters of the Stanislaus River surrounding the Highway 99 Bridge in Ripon, CA, from surface to bottom, between the Union Pacific Railway Bridge to the west and the Stanislaus River pedestrian crossing bridge to the east of the Ripon Highway 99 Bridge, within the area formed by

connecting the following approximate latitude and longitude points in the following order: 37°43′47.7″ N, 121°06′36.0″ W, thence to 37°43′49.9″ N, 121°06′38.6″ W, thence to 37°43′51.3″ N, 121°06′36.1″ W, thence to 37°43′49.2″ N, 121°06′33.6″ W (NAD 83), and thence to the point of beginning; or as announced via Broadcast Notice to Mariners. The duration of this zone is intended to ensure the safety of mariners, vessels, and the navigable waters during the bridge construction project. No vessel or person would be permitted to enter the safety zone without obtaining permission from the COTP or a designated representative.

V. Regulatory Analyses

We developed this rule after considering numerous statutes and Executive orders related to rulemaking. Below we summarize our analyses based on a number of these statutes and Executive orders, and we discuss First Amendment rights of protestors.

A. Regulatory Planning and Review

Executive Orders 12866 and 13563 direct agencies to assess the costs and benefits of available regulatory alternatives and, if regulation is necessary, to select regulatory approaches that maximize net benefits. Executive Order 13771 directs agencies to control regulatory costs through a budgeting process. This rule has not been designated a ''significant regulatory action,'' under Executive Order 12866. Accordingly, this rule has not been reviewed by the Office of Management and Budget (OMB), and pursuant to OMB guidance it is exempt from the requirements of Executive Order 13771.

This regulatory action determination is based on the location of the safety zone. Vessel transits in the area are limited to recreational vessels and personal watercraft, including small recreational vessels used for fishing, kayaks, and inner tubes. Notice would be provided to mariners via Notice to Mariners and posted at the construction site and adjacent river entry locations 30 days in advance.

B. Impact on Small Entities

The Regulatory Flexibility Act of 1980, 5 U.S.C. 601–612, as amended, requires Federal agencies to consider the potential impact of regulations on small entities during rulemaking. The term ''small entities'' comprises small businesses, not-for-profit organizations that are independently owned and operated and are not dominant in their fields, and governmental jurisdictions with populations of less than 50,000. The Coast Guard received no comments from the Small Business Administration on this rulemaking. The Coast Guard certifies under 5 U.S.C. 605(b) that this rule will not have a significant economic impact on a substantial number of small entities.

While some owners or operators of vessels intending to transit the safety zone may be small entities, for the reasons stated in section V.A above, this rule will not have a significant economic impact on any vessel owner or operator. Notice will be provided 30 days in advance of the safety zone. River entry and exit points will be identified on both sides of the safety zone, and markers will provide mariners with clear instruction throughout the duration of the project. Depending on operations and river level parameters, mariners will be provided a transit lane on weekends between July 25, 2020 and November 7, 2020.

Under section 213(a) of the Small Business Regulatory Enforcement Fairness Act of 1996 (Pub. L. 104–121), we want to assist small entities in understanding this rule. If the rule would affect your small business, organization, or governmental jurisdiction and you have questions concerning its provisions or options for compliance, please call or email the person listed in the **FOR FURTHER INFORMATION CONTACT** section.

Small businesses may send comments on the actions of Federal employees who enforce, or otherwise determine compliance with, Federal regulations to the Small Business and Agriculture Regulatory Enforcement Ombudsman and the Regional Small Business Regulatory Fairness Boards. The Ombudsman evaluates these actions annually and rates each agency's responsiveness to small business. If you wish to comment on actions by employees of the Coast Guard, call 1–888–REG–FAIR (1–888–734–3247). The Coast Guard will not retaliate against small entities that question or complain about this rule or any policy or action of the Coast Guard.

C. Collection of Information

This rule will not call for a new collection of information under the Paperwork Reduction Act of 1995 (44 U.S.C. 3501–3520).

D. Federalism and Indian Tribal Governments

A rule has implications for federalism under Executive Order 13132, Federalism, if it has a substantial direct effect on the States, on the relationship between the National Government and the States, or on the distribution of power and responsibilities among the various levels of government. We have analyzed this rule under that Order and have determined that it is consistent with the fundamental federalism principles and preemption requirements described in Executive Order 13132.

Also, this rule does not have tribal implications under Executive Order 13175, Consultation and Coordination with Indian Tribal Governments, because it does not have a substantial direct effect on one or more Indian tribes, on the relationship between the Federal Government and Indian tribes, or on the distribution of power and responsibilities between the Federal Government and Indian tribes. If you believe this rule has implications for federalism or Indian tribes, please contact the person listed in the **FOR FURTHER INFORMATION CONTACT** section above.

E. Unfunded Mandates Reform Act

The Unfunded Mandates Reform Act of 1995 (2 U.S.C. 1531–1538) requires Federal agencies to assess the effects of their discretionary regulatory actions. In particular, the Act addresses actions that may result in the expenditure by a State, local, or tribal government, in the aggregate, or by the private sector of $100,000,000 (adjusted for inflation) or more in any one year. Though this rule will not result in such an expenditure, we do discuss the effects of this rule elsewhere in this preamble.

F. Environment

We have analyzed this rule under Department of Homeland Security Directive 023–01, Rev. 1, associated implementing instructions, and Environmental Planning COMDTINST 5090.1 (series), which guide the Coast Guard in complying with the National Environmental Policy Act of 1969 (42 U.S.C. 4321–4370f), and have determined that this action is one of a category of actions that do not individually or cumulatively have a significant effect on the human environment. This rule involves a safety zone that will prohibit entry to the area surrounding the bridge construction site and will last approximately five months with intermittent weekend openings. It is categorically excluded from further review under paragraph L60(a) of Appendix A, Table 1 of DHS Instruction Manual 023–01–001–01, Rev. 1. A Record of Environmental Consideration supporting this determination is available in the docket. For instructions on locating the docket, see the **ADDRESSES** section of this preamble.

G. Protest Activities

The Coast Guard respects the First Amendment rights of protesters. Protesters are asked to call or email the person listed in the **FOR FURTHER INFORMATION CONTACT** section to coordinate protest activities so that your message can be received without jeopardizing the safety or security of people, places or vessels.

List of Subjects in 33 CFR Part 165

Harbors, Marine safety, Navigation (water), Reporting and recordkeeping requirements, Security measures, Waterways.

For the reasons discussed in the preamble, the Coast Guard amends 33 CFR part 165 as follows:

PART 165—REGULATED NAVIGATION AREAS AND LIMITED ACCESS AREAS

■ 1. The authority citation for part 165 continues to read as follows:

Authority: 46 U.S.C 70034, 70051; 33 CFR 1.05–1, 6.04–1, 6.04–6, and 160.5; Department of Homeland Security Delegation No. 0170.1.

■ 2. Add § 165.T11–019 to read as follows:

§ 165.T11–019 Safety Zone; Highway 99 Partial Bridge Replacement, Stanislaus River, Ripon, CA.

(a) *Location.* The following is a safety zone: The navigable waters of the Stanislaus River, from surface to bottom, between the Union Pacific Railway Bridge to the west and the Stanislaus River pedestrian crossing bridge to the east of the Highway 99 Ripon Bridge, within the area formed by connecting the following approximate latitude and longitude points in the following order: 37°43′47.7″ N, 121°06′36.0″ W, thence to 37°43′49.9″ N, 121°06′38.6″ W, thence to 37°43′51.3″ N, 121°06′36.1″ W, thence to 37°43′49.2″ N, 121°06′33.6″ W (NAD 83), and thence to the point of beginning; or as announced via Broadcast Notice to Mariners.

(b) *Definitions.* As used in this section, ''designated representative'' means a Coast Guard Patrol Commander, including a Coast Guard coxswain, petty officer, or other officer operating a Coast Guard vessel or a Federal, State, or local officer designated by or assisting the Captain of the Port San Francisco (COTP) in the enforcement of the safety zone.

(c) *Regulations.* (1) Under the general safety zone regulations in subpart B of this part, you may not enter the safety zone described in paragraph (a) of this section unless authorized by the COTP or the COTP's designated representative.

(2) The safety zone is closed to all vessel traffic, except as may be permitted by the COTP or the COTP's designated representative.

(3) Vessel operators desiring to enter or operate within the safety zone must contact the COTP or the COTP's designated representative to obtain permission to do so. Vessel operators given permission to enter or operate in the safety zone must comply with all lawful orders or directions given to them by the COTP or the COTP's designated representative. Persons and vessels may request permission to enter the safety zone through the 24-hour Command Center at telephone (415) 399–3547.

(d) *Enforcement period.* This section will be enforced from June 15, 2020 through November 7, 2020.

(e) *Information broadcasts.* The COTP or the COTP's designated representative will notify the maritime community of periods during which this zone will be enforced in accordance with 33 CFR 165.7. Additionally, signage will be posted beginning 30 days prior to the start of the project and will remain posted for the duration of the project. River markers will be provided on the Stanislaus River on each side of the safety zone to direct mariners.

Dated: May 14, 2020.

Marie B. Byrd,

Captain, U.S. Coast Guard, Captain of the Port, San Francisco.

[FR Doc. 2020–11055 Filed 6–5–20; 8:45 am]

BILLING CODE 9110–04–P

DEPARTMENT OF HOMELAND SECURITY

Coast Guard

33 CFR Part 165

[Docket Number USCG–2020–0067]

RIN 1625–AA00

Safety Zone; Lake of the Ozarks, Mile Marker .5 on the Main Channel of the Lake of the Ozarks Near Bagnel Dam, Lake Ozark, MO

AGENCY: Coast Guard, DHS.

ACTION: Temporary final rule.

SUMMARY: The Coast Guard is establishing a temporary safety zone for certain waters of the Lake of the Ozarks. This action is necessary to provide for the safety of life on these navigable waters during fireworks displays. This regulation prohibits persons and vessels from being in the safety zone during the specified periods of enforcement unless authorized by the Captain of the Port Sector Upper Mississippi River or a designated representative.

DATES: This rule is effective without actual notice from June 8, 2020 through 10:15 p.m. on August 15, 2020. For purposes of enforcement, actual notice will be used from 9:15 p.m. on May 23, 2020 through June 8, 2020.

ADDRESSES: To view documents mentioned in this preamble as being available in the docket, go to *https://www.regulations.gov,* type USCG–2020–0067 in the ''SEARCH'' box and click ''SEARCH.'' Click on Open Docket Folder on the line associated with this rule.

FOR FURTHER INFORMATION CONTACT: If you have questions on this rule, call or email Lieutenant Commander Christian Barger, Sector Upper Mississippi River Waterways Management Division, U.S. Coast Guard; telephone 309–737–1982, email *Christian.J.Barger@uscg.mil.*

SUPPLEMENTARY INFORMATION:

I. Table of Abbreviations

CFR Code of Federal Regulations
COTP Captain of the Port Sector Upper Mississippi River
DHS Department of Homeland Security
FR Federal Register
NPRM Notice of proposed rulemaking
§ Section
U.S.C. United States Code

II. Background Information and Regulatory History

On December 10, 2019, Celebration Cruises notified the Coast Guard that it will be conducting fireworks displays from 9:15 p.m. through 10:15 p.m. on May 23, June 20, June 27, July 4, July 11, July 18, July 25, August 1, August 8, and August 15, 2020. The fireworks are to be launched from a barge on Lake of the Ozarks at mile marker .5 on the main channel of Lake of the Ozarks near Bagnel Dam in Lake Ozark, MO. In response, on March 26, 2020, the Coast Guard published a notice of proposed rulemaking (NPRM) titled *Safety Zone; Lake of the Ozarks, Mile Marker .5 on the Main Channel of the Lake of the Ozarks Near Bagnel Dam, Lake Ozark, MO* [85 FR 17038]. There we stated why we issued the NPRM and invited comments on our proposed regulatory action related to these fireworks displays. During the comment period that ended April 27, 2020, we received four comments.

Under 5 U.S.C. 553(d)(3), the Coast Guard finds that good cause exists for making this rule effective less than 30 days after publication in the **Federal Register**. Delaying the effective date of this rule would be impracticable because immediate action is needed to

respond to the potential safety hazards associated with the fireworks displays.

III. Legal Authority and Need for Rule

The Coast Guard is issuing this rule under authority in 46 U.S.C. 70034 (previously 33 U.S.C. 1231). The Captain of the Port Sector Upper Mississippi River (COTP) has determined that potential hazards associated with the fireworks to be used on May 23, June 20, June 27, July 4, July 11, July 18, July 25, August 1, August 8, and August 15, 2020 will be a safety concern for anyone within a 420-foot radius of the barge. The purpose of this rule is to ensure safety of vessels and the navigable waters in the safety zone before, during, and after the scheduled event.

IV. Discussion of Comments, Changes, and the Rule

As noted above, we received four comments on our NPRM published March 26, 2020. Two of the comments were in full support of the proposed safety zone as it was written. The third comment was also in support of the proposed rule, however the commentor had a few questions; we will answer them here. The fourth comment was not applicable to this rule.

The first question was regarding the definition of a vessel. As defined in 33 Code of Federal Regulations (CFR) 160.3, ''*Vessel* means every description of watercraft or other artificial conveyance used, or capable of being used, as a means of transportation on water'' and includes craft on and below the surface of the water. The second question was regarding the definition of navigable waters as it applied to this regulation prohibiting vessels and persons from being on, or in the surrounding waters around, Bagnel Dam. The safety zone that is being established at mile marker .5 on the Main Channel will only cover an area within a 420-foot radius from the fireworks barge and will not cover any portion of land, any permanant structures (including Bagnel Dam), nor the waters immediately adjacent to either side of Bagnel Dam. The enforcement location of the regulation has been updated to include specification of the 420-foot radius.

This rule establishes a safety zone from 9:15 p.m. through 10:15 p.m. on May 23, June 20, June 27, July 4, July 11, July 18, July 25, August 1, August 8, and August 15, 2020. The safety zone will cover all navigable waters within 420 feet of a fireworks barge on Lake of the Ozarks at mile marker .5 on the main channel of Lake of the Ozarks near Bagnel Dam in Lake Ozark, MO . The duration of the zone is intended to ensure the safety of vessels and these navigable waters before, during, and after the scheduled 9:15 to 10:15 p.m. fireworks displays. No vessel or person will be permitted to enter the safety zone without obtaining permission from the COTP or a designated representative.

The fourth comment expressed concern that the Coast Guard had misintereted Executive Order 13771. The fourth comment related to Executive Order 13771 is beyond the scope of the regulation because the Executive Order that the comment refers to is not applicable to this regulation.

V. Regulatory Analyses

We developed this rule after considering numerous statutes and Executive orders related to rulemaking. Below we summarize our analyses based on a number of these statutes and Executive orders, and we discuss First Amendment rights of protestors.

A. Regulatory Planning and Review

Executive Orders 12866 and 13563 direct agencies to assess the costs and benefits of available regulatory alternatives and, if regulation is necessary, to select regulatory approaches that maximize net benefits. Executive Order 13771 directs agencies to control regulatory costs through a budgeting process. This rule has not been designated a ''significant regulatory action,'' under Executive Order 12866. Accordingly, this rule has not been reviewed by the Office of Management and Budget (OMB), and pursuant to OMB guidance it is exempt from the requirements of Executive Order 13771.

This regulatory action determination is based on the size, location, and duration of the temporary safety zone. This action involves only ten, one-hour long, occurrences in which persons and vessels will be prohibited from entering an area within 420 feet of a fireworks barge on Lake of the Ozarks.

B. Impact on Small Entities

The Regulatory Flexibility Act of 1980, 5 U.S.C. 601–612, as amended, requires Federal agencies to consider the potential impact of regulations on small entities during rulemaking. The term ''small entities'' comprises small businesses, not-for-profit organizations that are independently owned and operated and are not dominant in their fields, and governmental jurisdictions with populations of less than 50,000. The Coast Guard received no comments from the Small Business Administration on this rulemaking. The Coast Guard certifies under 5 U.S.C. 605(b) that this rule will not have a significant economic impact on a substantial number of small entities.

While some owners or operators of vessels intending to transit the safety zone may be small entities, for the reasons stated in section V.A above, this rule will not have a significant economic impact on any vessel owner or operator.

Under section 213(a) of the Small Business Regulatory Enforcement Fairness Act of 1996 (Pub. L. 104–121), we want to assist small entities in understanding this rule. If the rule would affect your small business, organization, or governmental jurisdiction and you have questions concerning its provisions or options for compliance, please call or email the person listed in the **FOR FURTHER INFORMATION CONTACT** section.

Small businesses may send comments on the actions of Federal employees who enforce, or otherwise determine compliance with, Federal regulations to the Small Business and Agriculture Regulatory Enforcement Ombudsman and the Regional Small Business Regulatory Fairness Boards. The Ombudsman evaluates these actions annually and rates each agency's responsiveness to small business. If you wish to comment on actions by employees of the Coast Guard, call 1–888–REG–FAIR (1–888–734–3247). The Coast Guard will not retaliate against small entities that question or complain about this rule or any policy or action of the Coast Guard.

C. Collection of Information

This rule will not call for a new collection of information under the Paperwork Reduction Act of 1995 (44 U.S.C. 3501–3520).

D. Federalism and Indian Tribal Governments

A rule has implications for federalism under Executive Order 13132, Federalism, if it has a substantial direct effect on the States, on the relationship between the National Government and the States, or on the distribution of power and responsibilities among the various levels of government. We have analyzed this rule under that Order and have determined that it is consistent with the fundamental federalism principles and preemption requirements described in Executive Order 13132.

Also, this rule does not have tribal implications under Executive Order 13175, Consultation and Coordination with Indian Tribal Governments, because it does not have a substantial direct effect on one or more Indian

tribes, on the relationship between the Federal Government and Indian tribes, or on the distribution of power and responsibilities between the Federal Government and Indian tribes.

E. Unfunded Mandates Reform Act

The Unfunded Mandates Reform Act of 1995 (2 U.S.C. 1531–1538) requires Federal agencies to assess the effects of their discretionary regulatory actions. In particular, the Act addresses actions that may result in the expenditure by a State, local, or tribal government, in the aggregate, or by the private sector of $100,000,000 (adjusted for inflation) or more in any one year. Though this rule will not result in such an expenditure, we do discuss the effects of this rule elsewhere in this preamble.

F. Environment

We have analyzed this rule under Department of Homeland Security Directive 023–01, Rev. 1, associated implementing instructions, and Environmental Planning COMDTINST 5090.1 (series), which guide the Coast Guard in complying with the National Environmental Policy Act of 1969(42 U.S.C. 4321–4370f), and have determined that this action is one of a category of actions that do not individually or cumulatively have a significant effect on the human environment. This rule involves a safety zone lasting only one hour on ten different days that would prohibit entry within 420 feet of a fireworks barge on Lake of the Ozarks at mile marker .5 on the main channel of Lake of the Ozarks near Bagnel Dam in Lake Ozark, MO. It is categorically excluded from further review under paragraph L60(a) of Appendix A, Table 1 of DHS Instruction Manual 023–01–001–01, Rev. 1. A Record of Environmental Consideration supporting this determination is available in the docket. For instructions on locating the docket, see the **ADDRESSES** section of this preamble.

G. Protest Activities

The Coast Guard respects the First Amendment rights of protesters. Protesters are asked to call or email the person listed in the **FOR FURTHER INFORMATION CONTACT** section to coordinate protest activities so that your message can be received without jeopardizing the safety or security of people, places or vessels.

List of Subjects in 33 CFR Part 165

Harbors, Marine safety, Navigation (water), Reporting and recordkeeping requirements, Security measures, Waterways.

For the reasons discussed in the preamble, the Coast Guard amends 33 CFR part 165 as follows:

PART 165—REGULATED NAVIGATION AREAS AND LIMITED ACCESS AREAS

■ 1. The authority citation for part 165 continues to read as follows:

Authority: 46 U.S.C. 70034, 70051; 33 CFR 1.05–1, 6.04–1, 6.04–6, and 160.5; Department of Homeland Security Delegation No. 0170.1.

■ 2. Add § 165.T08–0067 to read as follows:

§ 165.T08–0067 Safety Zone; Lake of the Ozarks, Mile .5 on the Main Channel of the Lake of the Ozarks near Bagnel Dam, Lake Ozark, MO

(a) *Location.* The following area is a safety zone: Lake of the Ozarks, within a 420-foot radius around a fireworks barge located at mile marker .5 on the main channel of the Lake of the Ozarks near Bagnel Dam in Lake Ozark, MO.

(b) *Period of enforcement.* This section is effective from 9:15 p.m. through 10:15 p.m. on May 23, June 20, June 27, July 4, July 11, July 18, July 25, August 1, August 8, and August 15, 2020.

(c) *Regulations.* (1) In accordance with the general regulations in § 165.23 of this part, persons and vessels are prohibited from entering the safety zone unless authorized by the Captain of the Port Sector Upper Mississippi River (COTP) or a designated representative. A designated representative is a commissioned, warrant, or petty officer of the U.S. Coast Guard assigned to units under the operational control of USCG Sector Upper Mississippi River.

(2) Persons or vessels desiring to enter into or pass through the zone must request permission from the COTP or a designated representative. They may be contacted by telephone at 314–269–2332.

(3) If permission is granted, all persons and vessels shall comply with the instructions of the COTP or designated representative while navigating in the regulated area.

(d) *Informational broadcasts.* The COTP or a designated representative will inform the public of the enforcement date and times for this safety zone, as well as any emergent safety concerns that may delay the enforcement of the zone through Local Notices to Mariners (LNM).

Dated: May 15, 2020.

S.A. Stoermer,

Captain, U.S. Coast Guard, Captain of the Port Sector Upper Mississippi River.

[FR Doc. 2020–10912 Filed 6–5–20; 8:45 am]

BILLING CODE 9110–04–P

DEPARTMENT OF DEFENSE

Department of the Army, Corps of Engineers

33 CFR Parts 207 and 326

RIN 0710–AB13

Civil Monetary Penalty Inflation Adjustment Rule

AGENCY: U.S. Army Corps of Engineers, DoD.

ACTION: Final rule.

SUMMARY: The U.S. Army Corps of Engineers (Corps) is issuing this final rule to adjust its civil monetary penalties (CMP) under the Rivers and Harbors Appropriation Act of 1922, the Clean Water Act (CWA) and the National Fishing Enhancement Act to account for inflation.

DATES: This final rule is effective on June 8, 2020.

FOR FURTHER INFORMATION CONTACT: For the Navigation portion, please contact Mr. Paul Clouse at 202–761–4709 or by email at *Paul.D.Clouse@usace.army.mil* or for the CWA portion, Ms. Karen Mulligan at 202–761–4664 or by email at *karen.mulligan@usace.army.mil* or access the U.S. Army Corps of Engineers Regulatory Home Page at *http://www.usace.army.mil/Missions/CivilWorks/RegulatoryProgramandPermits.aspx.*

SUPPLEMENTARY INFORMATION: The Federal Civil Penalties Inflation Adjustment Act of 1990, Public Law 101–410, 104 Stat. 890 (28 U.S.C. 2461, note), as amended by the Debt Collection Improvement Act of 1996, Public Law 104–134, April 26, 1996, and further amended by the Federal Civil Penalties Inflation Adjustment Act Improvements Act of 2015 (Inflation Adjustment Act), Public Law 114–74, November 2, 2015, required agencies to annually adjust the level of CMP for inflation to improve their effectiveness and maintain their deterrent effect.

With this rule, the new statutory maximum penalty levels listed in Table 1 will apply to all statutory civil penalties assessed on or after the effective date of this rule. Table 1 shows the calculation of the 2020 annual inflation adjustment based on the guidance provided by the Office of Management and Budget (OMB) (see December 16, 2019, Memorandum for the Heads of Executive Departments and Agencies, Subject: Implementation of Penalty Inflation Adjustments for 2020, Pursuant to the Federal Civil Penalties Inflation Adjustment Act Improvements Act of 2015). The OMB provided to

agencies the cost-of-living adjustment multiplier for 2020, based on the Consumer Price Index for All Urban Consumers (CPI–U) for the month of October 2019, not seasonally adjusted, which is 1.01764. Agencies are to adjust ''the maximum civil monetary penalty or the range of minimum and maximum civil monetary penalties, as applicable, for each civil monetary penalty by the cost-of-living adjustment.'' For 2020, agencies multiply each applicable penalty by the multiplier, 1.01764, and round to the nearest dollar. The multiplier should be applied to the most recent penalty amount, *i.e.,* the one that includes the 2019 annual inflation adjustment.

TABLE 1

Citation	Civil Monetary Penalty (CMP) amount established by law	2019 CMP amount in effect prior to this rulemaking	2020 Inflation adjustment multiplier	CMP amount as of June 8, 2020
Rivers and Harbors Act of 1922 (33 U.S.C. 555).	$2,500 per violation	$5,732 per violation	1.01764	$5,834 per violation.
CWA, 33 U.S.C. 1319(g)(2)(A).	$10,000 per violation, with a maximum of $25,000.	$21,934 per violation, with a maximum of $54,833.	1.01764	$22,321 per violation, with a maximum of $55,801.
CWA, 33 U.S.C. 1344(s)(4) ...	Maximum of $25,000 per day for each violation.	Maximum of $54,833 per day for each violation.	1.01764	Maximum of $55,801 per day for each violation.
National Fishing Enhancement Act, 33 U.S.C. 2104(e).	Maximum of $10,000 per violation.	Maximum of $24,017 per violation.	1.01764	Maximum of $24,441 per violation.

Section 4 of the Inflation Adjustment Act directs federal agencies to publish annual penalty inflation adjustments. In accordance with Section 553 of the Administrative Procedures Act (APA), most rules are subject to notice and comment and are effective no earlier than 30 days after publication in the **Federal Register**. Section 4(b)(2) of the Inflation Adjustment Act further provides that each agency shall make the annual inflation adjustments ''notwithstanding section 553'' of the APA. According to the December 2019 OMB guidance issued to Federal agencies on the implementation of the 2020 annual adjustment, the phrase ''notwithstanding section 553'' means that ''the public procedure the APA generally requires (*i.e.,* notice, an opportunity for comment, and a delay in effective date) is not required for agencies to issue regulations implementing the annual adjustment.'' Consistent with the language of the Inflation Adjustment Act and OMB's implementation guidance, this rule is not subject to notice and opportunity for public comment. This rule adjusts the value of current statutory civil penalties to reflect and keep pace with the levels originally set by Congress when the statutes were enacted, as required by the Inflation Adjustment Act. This rule will apply prospectively to penalty assessments beginning on the effective date of this final rule.

Regulatory Procedures

Plain Language

In compliance with the principles in the President's Memorandum of June 1, 1998, regarding plain language, this preamble is written using plain language. The use of ''we'' in this notice refers to the Corps and the use of ''you'' refers to the reader. We have also used the active voice, short sentences, and common everyday terms except for necessary technical terms.

Executive Order 12866, ''Regulatory Planning and Review,'' and Executive Order 13563, ''Improving Regulation and Regulatory Review''

This rule is not designated a ''significant regulatory action'' under Executive Order 12866 and OMB determined this rule to not be significant. Moreover, this final rule makes nondiscretionary adjustments to existing civil monetary penalties in accordance with the Inflation Adjustment Act and OMB guidance. The Corps, therefore, did not consider alternatives and does not have the flexibility to alter the adjustments of the civil monetary penalty amounts as provided in this rule.

Public Law 96–511, ''Paperwork Reduction Act'' (44 U.S.C. Chapter 35)

The Department of Defense determined that provisions of the Paperwork Reduction Act of 1995, Public Law 104–13, 44 U.S.C. Chapter 35, and its implementing regulations, 5 CFR part 1320, do not apply to this rule because there are no new or revised recordkeeping or reporting requirements. This action merely increases the level of statutory civil penalties that could be imposed in the context of a federal civil administrative enforcement action or civil judicial case for violations of Corps-administered statutes and their implementing regulations.

Executive Order 13771, ''Reducing Regulation and Controlling Regulatory Costs''

This rule has been deemed not significant under Executive Order 12866 and is, therefore, not subject to the requirements of Executive Order 13771, ''Reducing Regulation and Controlling Regulatory Costs.''

Executive Order 13132, ''Federalism''

Executive Order 13132 establishes certain requirements that an agency must meet when it promulgates a rule that imposes substantial direct requirement costs on State and local governments, preempts State law, or otherwise has Federalism implications. This final rule will not have a substantial effect on State and local governments.

Public Law 96–354, ''Regulatory Flexibility Act'' (5 U.S.C. Chapter 6)

Because notice of proposed rulemaking and opportunity for comment are not required pursuant to 5 U.S.C. 553, or any other law, the analytical requirements of the Regulatory Flexibility Act (5 U.S.C. 601, *et seq.*) are inapplicable. Therefore, a regulatory flexibility analysis is not required and has not been prepared.

Unfunded Mandates Reform Act (2 U.S.C. Chapter 25)

Section 202 of the Unfunded Mandates Reform Act of 1995 (UMRA) (2 U.S.C. 1532) requires agencies to assess anticipated costs and benefits before issuing any rule the mandates of which require spending in any year of $100 million in 1995 dollars, updated annually for inflation. In 2016, that threshold is approximately $146 million. This rule will not mandate any

requirements for State, local, or tribal governments, nor will it affect private sector costs.

Public Law 104–113, ''National Technology Transfer and Advancement Act'' (15 U.S.C. Chapter 7)

Section 12(d) of the National Technology Transfer and Advancement Act of 1995 (NTTAA), Public Law 104–113, (15 U.S.C. 272 note), directs us to use voluntary consensus standards in our regulatory activities, unless to do so would be inconsistent with applicable law or otherwise impractical. Voluntary consensus standards are technical standards (*e.g.,* materials specifications, test methods, sampling procedures, and business practices) that are developed or adopted by voluntary consensus standards bodies. The NTTAA directs us to provide Congress, through OMB, explanations when we decide not to use available and applicable voluntary consensus standards. This rule does not involve technical standards. Therefore, we did not consider the use of any voluntary consensus standards.

Executive Order 13045, ''Protection of Children From Environmental Health Risks and Safety Risks''

Executive Order 13045 applies to any rule that: (1) Is determined to be ''economically significant'' as defined under Executive Order 12866, and (2) concerns an environmental health or safety risk that we have reason to believe may have a disproportionate effect on children. If the regulatory action meets both criteria, we must evaluate the environmental health or safety effects of the rule on children, and explain why the regulation is preferable to other potentially effective and reasonably feasible alternatives. This rule is not subject to this Executive Order because it is not economically significant as defined in Executive Order 12866. In addition, it does not concern an environmental or safety risk that we have reason to believe may have a disproportionate effect on children.

Executive Order 13175, ''Consultation and Coordination With Indian Tribal Governments''

Executive Order 13175 requires agencies to develop an accountable process to ensure ''meaningful and timely input by tribal officials in the development of regulatory policies that have tribal implications.'' The phrase ''policies that have tribal implications'' is defined in the Executive Order to include regulations that have ''substantial direct effects on one or more Indian tribes, on the relationship between the Federal government and the Indian tribes, or on the distribution of power and responsibilities between the Federal government and Indian tribes.'' This rule does not have tribal implications. The rule imposes no new substantive obligations on tribal governments. Therefore, Executive Order 13175 does not apply to this rule.

Public Law 104–121, ''Congressional Review Act'' (5 U.S.C. Chapter 8)

The Congressional Review Act, 5 U.S.C. 801 *et seq.,* as amended by the Small Business Regulatory Enforcement Fairness Act of 1996, generally provides that before a rule may take effect, the agency promulgating the rule must submit a rule report, which includes a copy of the rule, to each House of the Congress and to the Comptroller General of the United States. We will submit a report containing this rule and other required information to the U.S. Senate, the U.S. House of Representatives, and the Comptroller General of the United States. A major rule cannot take effect until 60 days after it is published in the **Federal Register**. This rule is not a ''major rule'' as defined by 5 U.S.C. 804(2).

Executive Order 12898, ''Federal Actions To Address Environmental Justice in Minority Populations and Low-Income Populations''

Executive Order 12898 requires that, to the greatest extent practicable and permitted by law, each Federal agency must make achieving environmental justice part of its mission. Executive Order 12898 provides that each Federal agency conduct its programs, policies, and activities that substantially affect human health or the environment in a manner that ensures that such programs, policies, and activities do not have the effect of excluding persons (including populations) from participation in, denying persons (including populations) the benefits of, or subjecting persons (including populations) to discrimination under such programs, policies, and activities because of their race, color, or national origin. This rule merely adjusts civil penalties to account for inflation, and therefore, is not expected to negatively impact any community, and therefore is not expected to cause any disproportionately high and adverse impacts to minority or low-income communities.

Executive Order 13211, ''Actions Concerning Regulations That Significantly Affect Energy Supply, Distribution, or Use''

This rule is not a ''significant energy action'' as defined in Executive Order 13211 because it is not likely to have a significant adverse effect on the supply, distribution, or use of energy.

List of Subjects

33 CFR Part 207

Navigation (water), Penalties, Reporting and recordkeeping requirements, and Waterways.

33 CFR Part 326

Administrative practice and procedure, Intergovernmental relations, Investigations, Law enforcement, Navigation (Water), Water pollution control, Waterways.

Approved by:

R.D. James,

Assistant Secretary of the Army (Civil Works).

For the reasons set out in the preamble, title 33, chapter II of the Code of Federal Regulations is amended as follows:

PART 207—NAVIGATION REGULATIONS

■ 1. The authority citation for part 207 is revised to read as follows:

Authority: 33 U.S.C. 1; 33 U.S.C. 555; 28 U.S.C. 2461 note.

■ 2. Amend § 207.800 by revising paragraph (c)(2) to read as follows:

§ 207.800 Collection of navigation statistics.

* * * * *

(c) * * *

(2) In addition, any person or entity that fails to provide timely, accurate, and complete statements or reports required to be submitted by the regulation in this section may also be assessed a civil penalty of up to $5,834 per violation under 33 U.S.C. 555, as amended.

* * * * *

PART 326—ENFORCEMENT

■ 1. The authority citation for part 326 continues to read as follows:

Authority: 33 U.S.C. 401 *et seq.;* 33 U.S.C. 1344; 33 U.S.C. 1413; 33 U.S.C. 2104; 33 U.S.C. 1319; 28 U.S.C. 2461 note.

■ 2. Amend § 326.6 by revising paragraph (a)(1) to read as follows:

§ 326.6 Class I administrative penalties.

(a) * * *

(1) This section sets forth procedures for initiation and administration of Class I administrative penalty orders under Section 309(g) of the Clean Water Act, judicially-imposed civil penalties under Section 404(s) of the Clean Water Act, and Section 205 of the National Fishing Enhancement Act. Under

Section 309(g)(2)(A) of the Clean Water Act, Class I civil penalties may not exceed $22,321 per violation, except that the maximum amount of any Class I civil penalty shall not exceed $55,801. Under Section 404(s)(4) of the Clean Water Act, judicially-imposed civil penalties may not exceed $55,801 per day for each violation. Under Section 205(e) of the National Fishing Enhancement Act, penalties for violations of permits issued in accordance with that Act shall not exceed $24,441 for each violation.

TABLE 1 TO PARAGRAPH (a)(1)

Environmental statute and U.S. code citation	Statutory civil monetary penalty amount for violations that occurred after November 2, 2015, and are assessed on or after June 8, 2020
Clean Water Act (CWA), Section 309(g)(2)(A), 33 U.S.C. 1319(g)(2)(A)	$22,321 per violation, with a maximum of $55,801.
CWA, Section 404(s)(4), 33 U.S.C. 1344(s)(4)	Maximum of $55,801 per day for each violation.
National Fishing Enhancement Act, Section 205(e), 33 U.S.C. 2104(e)	Maximum of $24,441 per violation.

* * * * *

[FR Doc. 2020–11114 Filed 6–5–20; 8:45 am]

BILLING CODE 3720–58–P

ENVIRONMENTAL PROTECTION AGENCY

40 CFR Part 174

[EPA–HQ–OPP–2019–0097; FRL–10008–72]

Bacillus thuringiensis Cry14Ab-1 Protein in Soybean; Exemption From the Requirement of a Tolerance

AGENCY: Environmental Protection Agency (EPA).

ACTION: Final rule.

SUMMARY: This regulation establishes an exemption from the requirement of a tolerance for residues of the *Bacillus thuringiensis* Cry14Ab-1 protein (hereafter referred to as Cry14Ab-1) in or on soybean when used as a Plant-Incorporated Protectant (PIP). BASF Corporation submitted a petition to EPA under the Federal Food, Drug, and Cosmetic Act (FFDCA), requesting an exemption from the requirement of a tolerance. This regulation eliminates the need to establish a maximum permissible level for residues of Cry14Ab-1.

DATES: This regulation is effective June 8, 2020. Objections and requests for hearings must be received on or before August 7, 2020, and must be filed in accordance with the instructions provided in 40 CFR part 178 (see also Unit I.C. of the **SUPPLEMENTARY INFORMATION**).

ADDRESSES: The docket for this action, identified by docket identification (ID) number EPA–HQ–OPP–2019–0097, is available at *http://www.regulations.gov* or at the Office of Pesticide Programs Regulatory Public Docket (OPP Docket) in the Environmental Protection Agency Docket Center (EPA/DC), West William Jefferson Clinton Bldg., Rm. 3334, 1301 Constitution Ave. NW, Washington, DC 20460–0001. The Public Reading Room is open from 8:30 a.m. to 4:30 p.m., Monday through Friday, excluding legal holidays. The telephone number for the Public Reading Room is (202) 566–1744, and the telephone number for the OPP Docket is (703) 305–5805. Please review the visitor instructions and additional information about the docket available at *http://www.epa.gov/dockets.*

FOR FURTHER INFORMATION CONTACT: Robert McNally, Biopesticides and Pollution Prevention Division (7511P), Office of Pesticide Programs, Environmental Protection Agency, 1200 Pennsylvania Ave. NW, Washington, DC 20460–0001; main telephone number: (703) 305–7090; email address: *BPPDFRNotices@epa.gov.*

SUPPLEMENTARY INFORMATION:

I. General Information

A. Does this action apply to me?

You may be potentially affected by this action if you are an agricultural producer, food manufacturer, or pesticide manufacturer. The following list of North American Industrial Classification System (NAICS) codes is not intended to be exhaustive, but rather provides a guide to help readers determine whether this document applies to them. Potentially affected entities may include:

- Crop production (NAICS code 111).
- Animal production (NAICS code 112).
- Food manufacturing (NAICS code 311).
- Pesticide manufacturing (NAICS code 32532).

B. How can I get electronic access to other related information?

You may access a frequently updated electronic version of 40 CFR part 180 through the Government Publishing Office's e-CFR site at *http://www.ecfr.gov/cgi-bin/text-idx?&c=ecfr&tpl=/ecfrbrowse/Title40/40tab_02.tpl.*

C. How can I file an objection or hearing request?

Under FFDCA section 408(g), 21 U.S.C. 346a, any person may file an objection to any aspect of this regulation and may also request a hearing on those objections. You must file your objection or request a hearing on this regulation in accordance with the instructions provided in 40 CFR part 178. To ensure proper receipt by EPA, you must identify docket ID number EPA–HQ–OPP–2019–0097 in the subject line on the first page of your submission. All objections and requests for a hearing must be in writing, and must be received by the Hearing Clerk on or before August 7, 2020. Addresses for mail and hand delivery of objections and hearing requests are provided in 40 CFR 178.25(b).

In addition to filing an objection or hearing request with the Hearing Clerk as described in 40 CFR part 178, please submit a copy of the filing (excluding any Confidential Business Information (CBI)) for inclusion in the public docket. Information not marked confidential pursuant to 40 CFR part 2 may be disclosed publicly by EPA without prior notice. Submit the non-CBI copy of your objection or hearing request, identified by docket ID number EPA–HQ–OPP–2019–0097, by one of the following methods:

- *Federal eRulemaking Portal: http://www.regulations.gov.* Follow the online instructions for submitting comments. Do not submit electronically any information you consider to be CBI or other information whose disclosure is restricted by statute.
- *Mail:* OPP Docket, Environmental Protection Agency Docket Center (EPA/DC), (28221T), 1200 Pennsylvania Ave. NW, Washington, DC 20460–0001.
- *Hand Delivery:* To make special arrangements for hand delivery or delivery of boxed information, please follow the instructions at *http://www.epa.gov/dockets/contacts.html.*

Additional instructions on commenting or visiting the docket,

along with more information about dockets generally, is available at *http://www.epa.gov/dockets.*

II. Background

In the **Federal Register** of June 28, 2019 (84 FR 30976) (FRL–9995–27), EPA issued a document pursuant to FFDCA section 408(d)(3), 21 U.S.C. 346a(d)(3), announcing the filing of a pesticide tolerance petition (PP 8F8722) by BASF Corporation, 26 Davis Drive, Research Triangle Park, NC 27709. The petition requested that 40 CFR part 174 be amended by establishing an exemption from the requirement of a tolerance for residues of the plant-incorporated protectant Cry14Ab-1 protein in soybean. That document referenced a summary of the petition prepared by the petitioner, which is available in the docket, *http://www.regulations.gov.* There were no comments received in response to the notice of filing.

A temporary exemption from the requirement of a tolerance (40 CFR 174.538) was previously granted (82 FR 57137) for Cry14Ab-1 protein in soybean as part of an Experimental Use Permit (EPA Registration Number 264–EUP–151). This temporary exemption expired on April 1, 2020.

III. Final Rule

A. EPA's Safety Determination

Section 408(c)(2)(A)(i) of FFDCA allows EPA to establish an exemption from the requirement for a tolerance (the legal limit for a pesticide chemical residue in or on a food) only if EPA determines that the exemption is ''safe.'' Section 408(c)(2)(A)(ii) of FFDCA defines ''safe'' to mean that ''there is a reasonable certainty that no harm will result from aggregate exposure to the pesticide chemical residue, including all anticipated dietary exposures and all other exposures for which there is reliable information.'' This includes exposure through drinking water and in residential settings, but does not include occupational exposure. Pursuant to FFDCA section 408(c)(2)(B), in establishing or maintaining in effect an exemption from the requirement of a tolerance, EPA must take into account the factors set forth in FFDCA section 408(b)(2)(C), which require EPA to give special consideration to exposure of infants and children to the pesticide chemical residue in establishing a tolerance and to ''ensure that there is a reasonable certainty that no harm will result to infants and children from aggregate exposure to the pesticide chemical residue. . . .'' Additionally, FFDCA section 408(b)(2)(D) requires that the Agency consider ''available information concerning the cumulative effects of a particular pesticide's residues'' and ''other substances that have a common mechanism of toxicity.''

EPA evaluated the available toxicity and exposure data on Cry14Ab-1 and considered their validity, completeness, and reliability, as well as the relationship of this information to human risk. A summary of the data upon which EPA relied and its risk assessment based on those data can be found within the document entitled ''Federal Food, Drug, and Cosmetic Act (FFDCA) Safety Determination for Cry14Ab-1 Protein'' (Safety Determination). This document, as well as other relevant information, is available in the docket for this action EPA–HQ–OPP–2019–0097.

The available data demonstrated that, with regard to humans, Cry14Ab-1 is not toxic or allergenic via any route of exposure. Although there may be some exposure to residues when Cry14Ab-1 is used in soybeans as a plant-incorporated protectant, exposure to such residues presents no concern for adverse effects. Non-dietary exposure via inhalation is not likely since Cry14Ab-1 is contained within plant cells, which essentially eliminates this exposure route or reduces it to negligible levels. Non-dietary exposure via the skin is somewhat more likely via contact with soybean products which might have been processed in a way that disrupts cellular structure. However, there are no risks associated with this exposure route to the Cry14Ab-1 protein itself, because it would be present in the plant at low levels, and is not toxic or allergenic. EPA also determined that a Food Quality Protection Act (FQPA) safety factor was not necessary as part of the qualitative assessment conducted for Cry14Ab-1, due to the low risk of this pesticide. These findings are discussed in more detail in the Safety Determination.

Based upon its evaluation in the Safety Determination, EPA concludes that there is a reasonable certainty that no harm will result to the U.S. population, including infants and children, from aggregate exposure to residues of Cry14Ab-1. Therefore, an exemption from the requirement of a tolerance is established for residues of Cry14Ab-1 in or on soybeans when used in accordance with label directions and good agricultural practices. In addition, EPA is removing the temporary exemption for Cry14Ab-1 (40 CFR 174.538) that was established for an Experimental Use Permit (EPA Registration Number 264–EUP–151) as that exemption expired on April 1, 2020.

B. Analytical Enforcement Methodology

EPA has determined that an analytical method is not required for enforcement purposes since the Agency is establishing an exemption from the requirement of a tolerance without any numerical limitation. Nonetheless, an Enzyme-Linked Immunosorbent Assay (ELISA) that detects Cry14Ab-1 protein in soybean seed was submitted by the petitioner as an analytical method. The analytical method is available as a test kit (EnviroLogix QualiPlate™ Cry14Ab ELISA kit number AP 052). An independent laboratory validation of the analytical method showed that the test kit was accurate for the detection of Cry14Ab-1 protein in grain composites containing Cry14Ab-1 soybean grain at 1 in 200 and 1 in 800 levels. Therefore, the limit of detection for Cry14Ab-1 protein in ground soybean grain was confirmed as one Cry14Ab-1 soybean seed in 800 total seeds.

IV. Statutory and Executive Order Reviews

This action establishes an exemption from the requirement of a tolerance exemption under FFDCA section 408(d) in response to a petition submitted to EPA. The Office of Management and Budget (OMB) has exempted these types of actions from review under Executive Order 12866, entitled ''Regulatory Planning and Review'' (58 FR 51735, October 4, 1993). Because this action has been exempted from review under Executive Order 12866, this action is not subject to Executive Order 13211, entitled ''Actions Concerning Regulations That Significantly Affect Energy Supply, Distribution, or Use'' (66 FR 28355, May 22, 2001), or Executive Order 13045, entitled ''Protection of Children from Environmental Health Risks and Safety Risks'' (62 FR 19885, April 23, 1997), nor is it considered a regulatory action under Executive Order 13771, entitled ''Reducing Regulations and Controlling Regulatory Costs'' (82 FR 9339, February 3, 2017). This action does not contain any information collections subject to OMB approval under the Paperwork Reduction Act, 44 U.S.C. 3501 *et seq.,* nor does it require any special considerations under Executive Order 12898, entitled ''Federal Actions to Address Environmental Justice in Minority Populations and Low-Income Populations'' (59 FR 7629, February 16, 1994).

Since tolerances and exemptions that are established on the basis of a petition under FFDCA section 408(d), such as

the tolerance exemption in this action, do not require the issuance of a proposed rule, the requirements of the Regulatory Flexibility Act (5 U.S.C. 601 *et seq.*) do not apply.

This action directly regulates growers, food processors, food handlers, and food retailers, not States or tribes. As a result, this action does not alter the relationships or distribution of power and responsibilities established by Congress in the preemption provisions of FFDCA section 408(n)(4). As such, EPA has determined that this action will not have a substantial direct effect on States or tribal governments, on the relationship between the National Government and the States or tribal governments, or on the distribution of power and responsibilities among the various levels of government or between the Federal Government and Indian tribes. Thus, EPA has determined that Executive Order 13132, entitled ''Federalism'' (64 FR 43255, August 10, 1999), and Executive Order 13175, entitled ''Consultation and Coordination with Indian Tribal Governments'' (65 FR 67249, November 9, 2000), do not apply to this action. In addition, this action does not impose any enforceable duty or contain any unfunded mandate as described under Title II of the Unfunded Mandates Reform Act (2 U.S.C. 1501 *et seq.*).

This action does not involve any technical standards that would require EPA's consideration of voluntary consensus standards pursuant to section 12(d) of the National Technology Transfer and Advancement Act (15 U.S.C. 272 note).

V. Congressional Review Act

Pursuant to the Congressional Review Act (5 U.S.C. 801 *et seq.*), EPA will submit a report containing this rule and other required information to the U.S. Senate, the U.S. House of Representatives, and the Comptroller General of the United States prior to publication of the rule in the **Federal Register**. This action is not a ''major rule'' as defined by 5 U.S.C. 804(2).

List of Subjects in 40 CFR Part 174

Environmental protection, Administrative practice and procedure, Agricultural commodities, Pesticides and pests, Reporting and recordkeeping requirements.

Dated: May 14, 2020.

Richard Keigwin,

Director, Office of Pesticide Programs.

Therefore, 40 CFR chapter I is amended as follows:

PART 174—[AMENDED]

■ 1. The authority citation for part 174 continues to read as follows:

Authority: 7 U.S.C. 136–136y; 21 U.S.C. 321(q), 346a and 371.

§ 174.538 [Removed]

■ 2. Remove § 174.538.

■ 3. Add § 174.540 to subpart W to read as follows:

§ 174.540 Bacillus thuringiensis Cry14Ab-1 protein; exemption from the requirement of a tolerance.

Residues of *Bacillus thuringiensis* Cry14Ab-1 protein in or on soybean food and feed commodities are exempt from the requirement of a tolerance when used as a plant-incorporated protectant in soybean.

[FR Doc. 2020–11676 Filed 6–5–20; 8:45 am]

BILLING CODE 6560–50–P

DEPARTMENT OF HOMELAND SECURITY

Federal Emergency Management Agency

44 CFR Part 67

[Docket ID FEMA–2020–0002]

Final Flood Elevation Determinations

AGENCY: Federal Emergency Management Agency, DHS.

ACTION: Final rule.

SUMMARY: Base (1% annual-chance) Flood Elevations (BFEs) and modified BFEs are made final for the communities listed below. The BFEs and modified BFEs are the basis for the floodplain management measures that each community is required either to adopt or to show evidence of being already in effect in order to qualify or remain qualified for participation in the National Flood Insurance Program (NFIP).

DATES: The date of issuance of the Flood Insurance Rate Map (FIRM) showing BFEs and modified BFEs for each community. This date may be obtained by contacting the office where the maps are available for inspection as indicated in the table below.

ADDRESSES: The final BFEs for each community are available for inspection at the office of the Chief Executive Officer of each community. The respective addresses are listed in the table below.

FOR FURTHER INFORMATION CONTACT: Rick Sacbibit, Chief, Engineering Services Branch, Federal Insurance and Mitigation Administration, FEMA, 400 C Street SW, Washington, DC 20472, (202) 646–7659, or (email) *patrick.sacbibit@fema.dhs.gov;* or visit the FEMA Mapping and Insurance eXchange (FMIX) online at *www.floodmaps.fema.gov/fhm/fmx_main.html.*

SUPPLEMENTARY INFORMATION: The Federal Emergency Management Agency (FEMA) makes the final determinations listed below for the modified BFEs for each community listed. These modified elevations have been published in newspapers of local circulation and ninety (90) days have elapsed since that publication. The Deputy Associate Administrator for Insurance and Mitigation has resolved any appeals resulting from this notification.

This final rule is issued in accordance with section 110 of the Flood Disaster Protection Act of 1973, 42 U.S.C. 4104, and 44 CFR part 67. FEMA has developed criteria for floodplain management in floodprone areas in accordance with 44 CFR part 60.

Interested lessees and owners of real property are encouraged to review the proof Flood Insurance Study and FIRM available at the address cited below for each community. The BFEs and modified BFEs are made final in the communities listed below. Elevations at selected locations in each community are shown.

National Environmental Policy Act. FEMA included flood hazard mapping data dissemination determinations as part of the NFIP Nationwide Programmatic Environmental Impact Statement, published on November 3, 2017, and completed in accordance with the Council on Environmental Quality's National Environmental Policy Act implementing regulations in 40 CFR 1500 through 1508 and therefore has determined that this action will not have a significant effect on the human environment.

Regulatory Flexibility Act. As flood elevation determinations are not within the scope of the Regulatory Flexibility Act, 5 U.S.C. 601–612, a regulatory flexibility analysis is not required.

Regulatory Classification. This final rule is not a significant regulatory action under the criteria of section 3(f) of Executive Order 12866 of September 30, 1993, Regulatory Planning and Review, 58 FR 51735.

Executive Order 13132, Federalism. This final rule involves no policies that have federalism implications under Executive Order 13132.

Executive Order 12988, Civil Justice Reform. This final rule meets the applicable standards of Executive Order 12988.

List of Subjects in 44 CFR Part 67

Administrative practice and procedure, Flood insurance, Reporting and recordkeeping requirements.

David I. Maurstad,

Deputy Associate Administrator for Insurance and Mitigation, Department of Homeland Security, Federal Emergency Management Agency.

Accordingly, 44 CFR part 67 is amended as follows:

PART 67—[AMENDED]

■ 1. The authority citation for part 67 continues to read as follows:

Authority: 42 U.S.C. 4001 *et seq.;* Reorganization Plan No. 3 of 1978, 3 CFR, 1978 Comp., p. 329; E.O. 12127, 44 FR 19367, 3 CFR, 1979 Comp., p. 376.

§ 67.11 [Amended]

■ 2. The tables published under the authority of § 67.11 are amended as follows:

Flooding sources	Location of referenced elevation	* Elevation in feet (NGVD) + Elevation in feet (NAVD) # Depth in feet above ground − Elevation in meters (MSL) modified	Communities affected
King County, Washington and Incorporated Areas Docket Nos.: FEMA–B–7748 and B–7765			
Cedar River	Approximately at 149th Avenue SE	+101	Unincorporated Areas of King County, City of Renton.
	Approximately 350 feet upstream of Landsburg Road SE	+528	
Green River	Approximately at Fort Dent Park Road	+24	Unincorporated Areas of King County, City of Auburn, City of Kent, City of Renton, City of Seatac, City of Tukwila.
	Approximately 0.48 miles downstream of SR 18	+74	
North Creek	Approximately 690 feet upstream of NE 195th Street, landward of east levee.	+34	City of Bothell, City of Woodinville.
	Approximately at SR 522, east of I–405, landward of east levee.	+34	
	Approximately 820 feet upstream of North Creek Parkway, landward of east levee.	+42	
North Creek	Approximately 100 feet upstream of N 195th Street, landward of west levee.	+36	City of Bothell.
	Approximately 820 feet upstream of North Creek Parkway, landward of west levee.	+42	
Patterson Creek	Approximately 600 feet upstream of SR 202, near confluence with Snoqualmie R.	+86	Unincorporated Areas of King County.
	Approximately .31 miles upstream of SR 202 past Patterson Creek Overflow.	+160	
Snoqualmie River	Approximately at the King County/Snohomish County boundary.	+50	Unincorporated Areas of King County, City of Carnation, City of Duvall, City of Snoqualmie.
	Approximately 0.5 miles downstream from Snoqualmie Dam.	+125	
Springbrook Creek	Approximately 0.44 miles downstream of SW 7th Street Bridge.	+24	Unincorporated Areas of King County, City of Renton, City of Tukwila.
	Approximately 250 feet downstream of the City of Renton/City of Kent boundary.	+30	

* National Geodetic Vertical Datum.
+ North American Vertical Datum.
# Depth in feet above ground.
− Mean Sea Level, rounded to the nearest 0.1 meter.

ADDRESSES

City of Auburn

Maps are made available for inspection at City Hall Annex, Planning & Development Department, Permit Center, 1 East Main Street, 2nd Floor, Auburn, WA 98001.

City of Bothell

Maps are made available for inspection at City Hall, 18415 101st Avenue Northeast, Bothell, WA 98011.

City of Carnation

Maps are available for inspection at City Hall, 4621 Tolt Avenue, Carnation, WA 98014.

City of Duvall

Flooding sources	Location of referenced elevation	* Elevation in feet (NGVD) + Elevation in feet (NAVD) # Depth in feet above ground − Elevation in meters (MSL) modified	Communities affected

Maps are available for inspection at City Hall, 15535 Main Street Northeast, Duvall, WA 98019.

City of Kent

Maps are available for inspection at City Hall, 220 Fourth Avenue South, Kent, WA 98032.

City of Renton

Maps are available for inspection at City Hall, 1055 South Grady Way, Renton, WA 98057.

City of Seatac

Maps are available for inspection at City Hall, 4800 South 188th Street, Seatac, WA 98188.

City of Snoqualmie

Maps are available for inspection at City Hall, 38624 Southeast River Street, Snoqualmie, WA 98065.

City of Tukwila

Maps are available for inspection at Public Works Department, 6300 Southcenter Boulevard, Tukwila, WA 98188.

City of Woodinville

Maps are available for inspection at City Hall, 17301 133rd Avenue Northeast, Woodinville, WA 98072.

Unincorporated Areas of King County

Maps are available for inspection at Department of Natural Resources and Parks, Water and Land Resources Division, 201 South Jackson Street, Suite 600, Seattle, WA 98104.

[FR Doc. 2020–10102 Filed 6–5–20; 8:45 am]

BILLING CODE 9110–12–P

Proposed Rules

Federal Register
Vol. 85, No. 110
Monday, June 8, 2020

This section of the FEDERAL REGISTER contains notices to the public of the proposed issuance of rules and regulations. The purpose of these notices is to give interested persons an opportunity to participate in the rule making prior to the adoption of the final rules.

DEPARTMENT OF AGRICULTURE

Agricultural Marketing Service

7 CFR Part 205

[Document Number AMS–NOP–19–0053; NOP–19–02]

RIN 0581–AD92

National Organic Program; Proposed Amendments to the National List of Allowed and Prohibited Substances per April 2019 NOSB Recommendations (Livestock and Handling)

AGENCY: Agricultural Marketing Service, USDA.

ACTION: Proposed rule.

SUMMARY: This proposed rule would amend the National List of Allowed and Prohibited Substances (National List) section of the United States Department of Agriculture's (USDA's) organic regulations to implement recommendations submitted to the Secretary of Agriculture (Secretary) by the National Organic Standards Board (NOSB). This rule proposes to add the following substances to the National List: Oxalic acid dihydrate as a pesticide for organic apiculture; pullulan for use in organic handling in products labeled, ''Made with organic (specified ingredients or food group(s))''; and collagen gel casing as a nonorganic agricultural substance for use in organic handling when organic forms of collagen gel casing are not commercially available.

DATES: Comments must be received by August 7, 2020.

ADDRESSES: Interested persons may comment on the proposed rule using the following procedures:

Federal eRulemaking Portal: https://www.regulations.gov. Follow the instructions for submitting comments.

Mail: Robert Pooler, Standards Division, National Organic Program, USDA–AMS–NOP, 1400 Independence Ave. SW, Room 2642–S, Ag Stop 0268, Washington, DC 20250–0268. Telephone: (202) 720–3252.

Instructions: All submissions received must include the docket number AMS–NOP–19–0053, NOP–19–02, and/or Regulatory Information Number (RIN) 0581–AD83 for this rulemaking. When submitting a comment, clearly indicate the proposed rule topic and section number to which the comment refers. In addition, comments should clearly indicate whether the commenter supports the action being proposed and, also clearly indicate the reason(s) for the position. Comments can also include information on alternative management practices, where applicable, that support alternatives to the proposed amendments. Comments should also offer any recommended language change(s) that would be appropriate to the position. Please include relevant information and data to support the position such as scientific, environmental, manufacturing, industry, or impact information, or similar sources. Only relevant material supporting the position should be submitted. All comments received will be posted without change to *https://www.regulations.gov.*

Document: To access the document and read background documents or comments received, go to *https://www.regulations.gov.* Comments submitted in response to this proposed rule will also be available for viewing in person at USDA–AMS, National Organic Program, Room 2642—South Building, 1400 Independence Ave. SW, Washington, DC, from 9 a.m. to 12 noon and from 1 p.m. to 4 p.m. Eastern Time, Monday through Friday (except official Federal holidays). Persons wanting to visit the USDA South Building to view comments received in response to this proposed rule are requested to make an appointment in advance by calling (202) 720–3252.

FOR FURTHER INFORMATION CONTACT: Robert Pooler, Standards Division, National Organic Program. Telephone: (202) 720–3252.

SUPPLEMENTARY INFORMATION:

I. Background

On December 21, 2000, the Secretary established the National List within part 205 of the USDA organic regulations (7 CFR 205.600 through 205.607). The National List identifies the synthetic substance allowances and the nonsynthetic substance prohibitions in organic farming. The National List also identifies synthetic and nonsynthetic nonagricultural substances and nonorganic agricultural substances that may be used in organic handling.

The Organic Foods Production Act of 1990, as amended (7 U.S.C. 6501–6524) (OFPA), and the USDA organic regulations specifically prohibit the use of any synthetic substance in organic production and handling unless the synthetic substance is on the National List. Section 205.105 also requires that any nonorganic agricultural and any nonsynthetic nonagricultural substance used in organic handling be on the National List. Under the authority of OFPA, the National List can be amended by the Secretary based on recommendations presented by the NOSB. Since the final rule establishing the National Organic Program (NOP) became effective on October 21, 2002, USDA's Agricultural Marketing Service (AMS) has published multiple rules amending the National List.

This proposed rule addresses NOSB recommendations to amend the National List that were submitted to the Secretary on April 26, 2019. Table 1 summarizes the proposed changes to the National List based on these NOSB recommendations.

TABLE 1—SUBSTANCES BEING ADDED TO THE NATIONAL LIST OR CURRENT LISTINGS BEING AMENDED

Substance	National list section	Proposed rule action
Oxalic acid dihydrate	§ 205.603	Add to National List.
Pullulan	§ 205.605	Add to National List.
Collagen gel casing	§ 205.606	Add to National List.

II. Overview of Proposed Amendments

The following provides an overview of the proposed amendments to designated sections of the National List regulations:

§ 205.603 Synthetic Substances Allowed for Use in Organic Livestock Production

Oxalic Acid Dihydrate

The proposed rule would amend the National List to add oxalic acid dihydrate to § 205.603 as a synthetic substance allowed for use in livestock production. Table 2 illustrates the proposed listing.

TABLE 2—PROPOSED RULE ACTION FOR OXALIC ACID DIHYDRATE

Current rule:	N/A
Proposed rule action:	Add oxalic acid dihydrate to § 205.603(b).

On October 3, 2017, AMS received a petition to add oxalic acid dihydrate to the National List as a parasiticide treatment of *Varroa destructor (''Varroa'')* mites in beehives.[1] Oxalic acid is a naturally occurring substance and oxalic acid dihydrate is produced through a chemical process. The EPA has approved the use of oxalic acid dihydrate to control *Varroa* mites (EPA Registration no. 91266–1).[2] Oxalic acid dihydrate may be applied to beehives by solution or vapor treatment and to package bees by solution. According to the petition, the only treatment for controlling *Varroa* mite infestation in beehives that is currently available to organic honey producers is formic acid.

In its recommendation to add oxalic acid dihydrate to the National List, the NOSB noted that formic acid hive fumigation may be detrimental to the bee brood. The NOSB determined that oxalic acid dihydrate would provide organic honey producers with a substance that may be an alternative to, or used in rotation with, formic acid to lessen the potential for pesticide resistance.

The NOSB reviewed and considered this petition, a technical report, and public comments on oxalic acid dihydrate at its public meeting on April 26, 2019.[3] [4] At this meeting, the NOSB determined that adding oxalic acid dihydrate to the National List is consistent with the OFPA criteria. In its recommendation to add oxalic acid dihydrate as a pesticide in apiculture, the NOSB noted that there were no environmental concerns with this substance, it would provide additional use benefits over formic acid, and would be supported by beekeepers.[5]

AMS reviewed the petition, technical report, and NOSB's recommendation for oxalic acid dihydrate. AMS concurs with the NOSB's determination that oxalic acid dihydrate, when manufactured as described in the petition, is a synthetic substance.

To address the NOSB's recommendation, AMS is proposing to add oxalic acid dihydrate to the National List as an allowed pesticide only in apiculture. As described in the petition, the only effective *Varroa* mite treatment on the National List that is currently available to organic honey producers is formic acid. Sucrose octanoate esters is also on the National List as a treatment for *Varroa* mite infestation. However, there are no current EPA registered products for sucrose octanoate esters, and the NOSB has recommended that sucrose octanoate esters be removed from the National List.[6] AMS agrees with the NOSB recommendation that it is necessary for organic producers to have another substance, in addition to formic acid, to control *Varroa* mite infestation. Oxalic acid dihydrate may be used in place of formic acid because of lower toxicity to the bee brood or in rotation with formic acid to reduce the potential for pesticide resistance. Consequently, this proposed rule would allow oxalic acid dihydrate as a pesticide in organic apiculture.

§ 205.605 Nonagricultural (Nonorganic) Substances Allowed as Ingredients in or on Processed Products Labeled as ''Organic'' or ''Made With Organic (Specified Ingredients or Food Group(s))''

Pullulan

The proposed rule would amend the National List to add pullulan to § 205.605(a) as an ingredient allowed in products labeled, ''Made with organic (specified ingredients or food group(s))..'' Table 3 illustrates the proposed listing.

TABLE 3—PROPOSED RULE ACTION FOR PULLULAN

Current rule:	N/A
Proposed rule action:	Add pullulan to § 205.605(a).

On January 31, 2018, AMS received a petition[7] to add pullulan as a nonsynthetic substance allowed for use in organic handling as an ingredient in tablets and capsules for dietary supplements labeled ''made with organic (specified ingredients or food group(s))..'' Pullulan, as described in a technical report solicited by the NOSB, is a natural extracellular polysaccharide excretion resulting from carbohydrate fermentation by the yeast-like fungus *Aureobasidium pullulans* and other non-toxic fungi strains.[8] The fungus *A. pullulans* is ubiquitous in nature and is most common in temperate zones in locations such as forest soil, freshwater, on plant leaves, and on seeds. The technical report also explains that the U.S. Food and Drug Administration (FDA) allows pullulan for use as a tablet coating, as an excipient, and as an alternative to gelatin in capsule production. Pullulan has been self-affirmed as GRAS (Generally Recognized as Safe) for specified uses in food including as an emulsifier, nutrient supplement, thickener, and texturizer (GRN No. 99).[9]

At its April 26, 2019, public meeting, the NOSB considered the petition, technical report, and public comments, and determined that (1) pullulan is a nonsynthetic substance and (2) the use of pullulan as an ingredient used in tablets and capsules for dietary supplements is consistent with the OFPA evaluation criteria for National List substances. Therefore, the NOSB recommended adding pullulan to § 205.605(a) as a nonsynthetic, nonagricultural substance allowed for use in organic handling.[10]

AMS has reviewed the NOSB recommendation on pullulan and agrees that pullulan, as petitioned, is a nonsynthetic, nonagricultural substance

[1] Oxalic acid petition: *https://www.ams.usda.gov/sites/default/files/media/OxalicAcidPetition10032017.pdf.*

[2] U.S. Environmental Protection Agency, Notice of Pesticide Registration, March 10, 2015, *https://www3.epa.gov/pesticides/chem_search/ppls/091266-00001-20150310.pdf.*

[3] Technical Evaluation Report for oxalic acid dihydrate: *https://www.ams.usda.gov/sites/default/files/media/OxalicAcidTR.pdf.*

[4] Access to written and oral public comments submitted for the April 2019 NOSB meeting is available here: *https://www.ams.usda.gov/event/national-organic-standards-board-nosb-meeting-seattle-wa.*

[5] NOSB recommendation for oxalic acid dihydrate: *https://www.ams.usda.gov/sites/default/files/media/LSOxalicAcidApril2019FinalRec.pdf.*

[6] NOSB recommendation (October 2018) available at: *https://www.ams.usda.gov/sites/default/files/media/LS2020SunsetFinalRecOct2018.pdf.*

[7] Pullulan petition: *https://www.ams.usda.gov/sites/default/files/media/PullulanPetition18131.pdf.*

[8] Pullulan technical report: *https://www.ams.usda.gov/sites/default/files/media/PullulanTechnicalReportFinal09072018.pdf.*

[9] GRAS Notice (GRN) No. 99, ''Pullulan,'' available at: *https://www.accessdata.fda.gov/scripts/fdcc/?set=GRASNotices.*

[10] NOSB Pullulan recommendation: *https://www.ams.usda.gov/sites/default/files/media/HSPullullanApr2019FinalRec.pdf.*

that meets the OFPA criteria for listing as a substance allowed for use in organic handling. AMS recognizes that other manufacturing methods may yield pullulan which could be classified as agricultural and certified organic. Consistent with the NOSB recommendation, AMS proposes to amend the National List by adding pullulan for use in tablets and capsules for dietary supplements labeled ''Made with organic (specified ingredients and food group(s)).'' AMS welcomes additional information on the proposed classification of pullulan as a nonsynthetic, nonagricultural substance and whether it may be certifiable as organic.

§ 205.606 Nonorganically Produced Agricultural Products Allowed as Ingredients in or on Processed Products Labeled as ''Organic''

Collagen Gel Casing

The proposed rule would amend the National List to add collagen gel casing as a nonorganic agricultural substance listed in § 205.606 for use in organic handling.

TABLE 4—PROPOSED RULE ACTION FOR COLLAGEN GEL CASING

Current rule:	N/A
Proposed rule action:	Add collagen gel casing to § 205.606.

On February 23, 2018, AMS received a petition to add collagen gel to the National List for use in organic handling as an ingredient in a co-extrusion organic sausage production system.[11] The petition explains that in sausage production collagen gel forms an edible film that binds and forms the meat, acts as a protective barrier, and is an ingredient in the final product. Collagen gel is an alternative to natural (animal byproducts) or manufactured (cellulose) casings traditionally used in sausage production. Collagen gel, as described in the petition, is derived from animal collagen that has been subjected to a limited (partial) protein hydrolysis via acid/base treatment, and a particle size reduction through a physical sieve. Water is then added to the resulting collagen pulp and the mixture is physically agitated to produce a gel. The final step involves lowering the gel pH to a range of 2.4–2.8 with an acid treatment.

At its April 26, 2019, public meeting, the NOSB considered the petition to add collagen gel to the National List for use in organic handling. As part of its review, the NOSB considered a technical report on collagen gel that described its manufacture, industry uses, chemical properties, and regulation.[12] The USDA Food Safety and Inspection Service regulates collagen gel as an ingredient in meat products (9 CFR 319.104 and 319.140).

After considering the petition, technical report, and public comments on collagen gel, the NOSB determined that the allowance of nonorganic collagen gel for use as an ingredient in organic handling is consistent with the OFPA evaluation criteria for National List substances.[13] The NOSB handling subcommittee discussed the collagen gel manufacturing process and considered whether this process induces change in the collagen chemical structure which would classify this as a synthetic substance. The NOSB determined that it is an agricultural substance and should be listed in § 205.606 because the collagen protein is denatured, but the structure is not chemically changed. Subsequently, the NOSB recommended adding collagen gel casing to § 205.606 as a nonorganically produced agricultural product allowed as an ingredient in or on processed products labeled as ''organic'' when organic forms are not commercially available.

AMS has reviewed the NOSB recommendation on collagen gel and agrees that collagen gel meets the OFPA evaluation criteria for an allowed substance on the National List. AMS is proposing to list collagen gel casing as a nonorganic agricultural ingredient allowed when an organic form is not commercially available. This action would require organic handlers to source organic forms of collagen gel before using any nonorganic source of this ingredient. If the organic form of the ingredient is not commercially available, the nonorganic form may be used.[14]

AMS is seeking comment on whether collagen gel is properly classified as an agricultural substance and could potentially be certified organic. According to the collagen gel petition, the manufacturing process includes a procedure that adjusts the pH of the gel to a target range between 2.4–2.8 (strongly acidic) by treating it with three acids: Acetic, lactic, and hydrochloric acids. AMS welcomes additional information on whether the use of acid induces chemical change(s) in the collagen gel which should cause the substance to be classified as a nonagricultural, synthetic substance.[15]

III. Related Documents

AMS published a notice in the **Federal Register** (83 FR 60373) on November 26, 2018, announcing the Spring 2019 NOSB meeting. This notice invited public comments on the NOSB recommendations on the substances addressed in this proposed rule.

IV. Statutory and Regulatory Authority

The OFPA authorizes the Secretary to make amendments to the National List based on recommendations developed by the NOSB. Sections 6518(k) and 6518(n) of the OFPA authorize the NOSB to develop recommendations for submission to the Secretary to amend the National List and establish a process by which persons may petition the NOSB for the purpose of having substances evaluated for inclusion on or deletion from the National List. Section 205.607 of the USDA organic regulations permits any person to petition to add or remove a substance from the National List and directs petitioners to obtain the petition procedures from USDA. The current petition procedures published in the **Federal Register** (81 FR 12680, March 10, 2016) for amending the National List can be accessed through the NOP Program Handbook on the NOP website at *https://www.ams.usda.gov/rules-regulations/organic/handbook.*

A. Executive Orders 12866 and 13771, and Regulatory Flexibility Act

This action falls within a category of regulatory actions that the Office of Management and Budget (OMB) has exempted from Executive Order 12866. Additionally, because this proposal does not meet the definition of a significant regulatory action, it does not trigger the requirements contained in Executive Order 13771. *See* OMB's Memorandum titled ''Interim Guidance Implementing Section 2 of the Executive Order of January 30, 2017 titled 'Reducing Regulation and Controlling Regulatory Costs' '' (February 2, 2017).

The Regulatory Flexibility Act (RFA) (5 U.S.C. 601–612) requires agencies to consider the economic impact of each rule on small entities and evaluate alternatives that would accomplish the objectives of the rule without unduly

[11] Collagen gel petition: *https://www.ams.usda.gov/sites/default/files/media/CollagenGelPetition.pdf.*

[12] Collagen gel technical evaluation report: *https://www.ams.usda.gov/sites/default/files/media/CollagenGelGelatinCasingsTechnicalReport01282019.pdf.*

[13] NOSB recommendation, collagen gel: *https://www.ams.usda.gov/sites/default/files/media/HSCollagenGelApr2019FinalRec.pdf.*

[14] See 7 CFR 205.606 and 7 CFR 205.2 for definition of ''Commercially available.''

[15] A change in collagen gel's chemical structure would potentially categorize it as a synthetic substance, as defined by the OFPA (7 U.S.C. 6502(22)).

burdening small entities or erecting barriers that would restrict their ability to compete in the market. The purpose of the RFA is to fit regulatory actions to the scale of businesses subject to the action. Section 605 of the RFA allows an agency to certify a rule, in lieu of preparing an analysis, if the rulemaking is not expected to have a significant economic impact on a substantial number of small entities.

The Small Business Administration (SBA) sets size criteria for each industry described in the North American Industry Classification System (NAICS) to delineate which operations qualify as small businesses. The SBA has classified small agricultural producers that engage in crop and animal production as those with average annual receipts of less than $1,000,000. Handlers are involved in a broad spectrum of food production activities and fall into various categories in the NAICS Food Manufacturing sector. The small business thresholds for food manufacturing operations are based on the number of employees and range from 500 to 1,250 employees, depending on the specific type of manufacturing. Certifying agents fall under the NAICS subsector, ''All other professional, scientific and technical services.'' For this category, the small business threshold is average annual receipts of less than $16.5 million.

AMS has considered the economic impact of this proposed rulemaking on small agricultural entities. Data collected by the USDA National Agricultural Statistics Service (NASS) and the NOP indicate most of the certified organic production operations in the United States would be considered small entities. According to the 2017 Census of Agriculture, 18,166 organic farms in the United States reported sales of organic products and total farmgate sales in excess of $7.2 billion.[16] Based on that data, organic sales average $400,000 per farm. Assuming a normal distribution of producers, we expect that most of these producers would fall under the $750,000 sales threshold to qualify as a small business.

According to the NOP's Organic Integrity Database, there are 19,671 organic handlers that are certified under the USDA organic regulations.[17] The Organic Trade Association's 2018 Organic Industry Survey has information about employment trends among organic manufacturers. The reported data are stratified into three groups by the number of employees per company: Less than 5; 5 to 49; and 50 plus. These data are representative of the organic manufacturing sector and the lower bound (50) of the range for the larger manufacturers is significantly smaller than the SBA's small business thresholds (500 to 1,250). Therefore, AMS expects that most organic handlers would qualify as small businesses.

The USDA has 78 accredited certifying agents who provide organic certification services to producers and handlers. The certifying agent that reports the most certified operations, nearly 3,500, would need to charge approximately $4,200 in certification fees in order to exceed the SBA's small business threshold of $15 million. The costs for certification generally range from $500 to $3,500, depending on the complexity of the operation. Therefore, AMS expects that most of the accredited certifying agents would qualify as small entities under the SBA criteria.

The economic impact on entities affected by this rule would not be significant. The effect of this proposed rule would be to allow the use of three additional substances in organic crop production and organic handling. Adding three substances to the National List would increase regulatory flexibility and would give small entities more tools to use in day-to-day operations.

AMS welcomes public comment on our assessment of costs and benefits and whether commenters have any additional information that would help establish that the action has total costs less than zero and therefore qualifies as an E.O. 13771 deregulatory action. One way to have 'costs less than zero' is to show that the rule allows business activity that is not allowed under the current regulations. Providing the monetary amount of such allowed business activity would be ideal.

B. Executive Order 12988

Executive Order 12988 instructs each executive agency to adhere to certain requirements in the development of new and revised regulations in order to avoid unduly burdening the court system. This proposed rule is not intended to have a retroactive effect. Accordingly, to prevent duplicative regulation, states and local jurisdictions are preempted under the OFPA from creating programs of accreditation for private persons or state officials who want to become certifying agents of organic farms or handling operations. A governing state official would have to apply to USDA to be accredited as a certifying agent, as described in section 6514(b) of the OFPA. States are also preempted under sections 6503 through 6507 of the OFPA from creating certification programs to certify organic farms or handling operations unless the state programs have been submitted to, and approved by, the Secretary as meeting the requirements of the OFPA.

Pursuant to section 6507(b)(2) of the OFPA, a state organic certification program that has been approved by the Secretary may, under certain circumstances, contain additional requirements for the production and handling of agricultural products organically produced in the state and for the certification of organic farm and handling operations located within the state. Such additional requirements must (a) further the purposes of the OFPA, (b) not be inconsistent with the OFPA, (c) not be discriminatory toward agricultural commodities organically produced in other States, and (d) not be effective until approved by the Secretary.

In addition, pursuant to section 6519(c)(6) of the OFPA, this proposed rule would not supersede or alter the authority of the Secretary under the Federal Meat Inspection Act (21 U.S.C. 601–624), the Poultry Products Inspection Act (21 U.S.C. 451–471), or the Egg Products Inspection Act (21 U.S.C. 1031–1056), concerning meat, poultry, and egg products, respectively, nor any of the authorities of the Secretary of Health and Human Services under the Federal Food, Drug and Cosmetic Act (21 U.S.C. 301 *et seq.*), nor the authority of the Administrator of the EPA under the Federal Insecticide, Fungicide and Rodenticide Act (7 U.S.C. 136 *et seq.*).

C. Paperwork Reduction Act

No additional collection or recordkeeping requirements are imposed on the public by this proposed rule. Accordingly, OMB clearance is not required by the Paperwork Reduction Act of 1995, 44 U.S.C. 3501, Chapter 35.

D. Executive Order 13175

This proposed rule has been reviewed in accordance with the requirements of Executive Order 13175, Consultation and Coordination with Indian Tribal Governments. The review reveals that this regulation will not have substantial and direct effects on tribal governments and will not have significant tribal implications.

[16] U.S. Department of Agriculture, National Agricultural Statistics Service. 2017 Census of Agriculture. *https://www.nass.usda.gov/Publications/AgCensus/2017/Full_Report/Volume_1,_Chapter_1_US/*. The number of organic farms includes both certified and exempt farms.

[17] Organic Integrity Database: *https://organic.ams.usda.gov/Integrity/*. Accessed on April 13, 2020.

F. General Notice of Public Rulemaking

This proposed rule reflects recommendations submitted by the NOSB to the Secretary to add three substances to the National List. A 60-day period for interested persons to comment on this rule is provided.

List of Subjects in 7 CFR Part 205

Administrative practice and procedure, Agricultural commodities, Agriculture, Animals, Archives and records, Fees, Imports, Labeling, Organically produced products, Plants, Reporting and recordkeeping requirements, Seals and insignia, Soil conservation.

For the reasons set forth in the preamble, 7 CFR part 205 is proposed to be amended as follows:

PART 205—NATIONAL ORGANIC PROGRAM

■ 1. The authority citation for 7 CFR part 205 continues to read as follows:

Authority: 7 U.S.C. 6501–6522.

■ 2. Amend § 205.603 by redesignating paragraphs (b)(8) through (11) as paragraphs (b)(9) through (12) and adding new paragraph (b)(8) to read as follows:

§ 205.603 Synthetic substances allowed for use in organic livestock production.

* * * * *

(b) * * *

(8) Oxalic acid dihydrate—for use as a pesticide solely for apiculture.

* * * * *

■ 3. Amend § 205.605 in paragraph (a) by adding, in alphabetical order an entry for ''Pullulan'' to read as follows:

§ 205.605 Nonagricultural (nonorganic) substances allowed as ingredients in or on processed products labeled as "organic" or "made with organic (specified ingredients or food group(s))."

(a) * * *

Pullulan—for use only in tablets and capsules for dietary supplements labeled ''made with organic (specified ingredients or food group(s)).''

* * * * *

■ 4. Amend § 205.606 by redesignating paragraphs (d) through (w) as paragraphs (e) through (x) and adding new paragraph (d) to read as follows:

§ 205.606 Nonorganically produced agricultural products allowed as ingredients in or on processed products labeled as "organic."

* * * * *

(d) Collagen gel casing.

* * * * *

Bruce Summers,

Administrator, Agricultural Marketing Service.

[FR Doc. 2020–11840 Filed 6–5–20; 8:45 am]

BILLING CODE 3410–02–P

DEPARTMENT OF TRANSPORTATION

Federal Aviation Administration

14 CFR Part 39

[Docket No. FAA–2019–0484; Product Identifier 2019–NM–065–AD]

RIN 2120–AA64

Airworthiness Directives; Airbus SAS Airplanes

AGENCY: Federal Aviation Administration (FAA), DOT.

ACTION: Proposed rule; withdrawal.

SUMMARY: The FAA is withdrawing a supplemental notice of proposed rulemaking (SNPRM) that proposed to adopt a new airworthiness directive (AD) that would have applied to all Airbus SAS Model A330–200, A330–200 Freighter, A330–300, A340–200, A340–300, A340–500, and A340–600 series airplanes. The SNPRM would have required repetitive tests of affected free fall actuators (FFAs), and replacement of any affected FFA that fails a test with a serviceable FFA; as specified in European Union Aviation Safety Agency (EASA) AD 2019–0164, dated July 11, 2019 (''EASA AD 2019–0164''). Since issuance of the SNPRM, the FAA has determined that the SNPRM does not adequately address the identified unsafe condition. Accordingly, the SNPRM is withdrawn.

DATES: As of June 8, 2020, the proposed rule, which was published in the **Federal Register** on January 21, 2020 (85 FR 3279), is withdrawn.

ADDRESSES:

Examining the AD Docket

You may examine the AD docket on the internet at *https://www.regulations.gov* by searching for and locating Docket No. FAA–2019–0484; or in person at Docket Operations between 9 a.m. and 5 p.m., Monday through Friday, except Federal holidays. The AD docket contains this AD action, any comments received, and other information. The street address for Docket Operations is U.S. Department of Transportation, Docket Operations, M–30, West Building Ground Floor, Room W12–140, 1200 New Jersey Avenue SE, Washington, DC 20590.

FOR FURTHER INFORMATION CONTACT: Vladimir Ulyanov, Aerospace Engineer, Large Aircraft Section, International Validation Branch, FAA, 2200 South 216th St., Des Moines, WA 98198; phone and fax: 206–231–3229.

SUPPLEMENTARY INFORMATION:

Discussion

The FAA issued an SNPRM that proposed to amend 14 CFR part 39 by adding an AD that would have applied to the specified products. The SNPRM was published in the **Federal Register** on January 21, 2020 (85 FR 3279). The SNPRM was prompted by a report that an airplane failed to extend its nose landing gear (NLG) using the free fall method, due to loss of the green hydraulic system. The SNPRM proposed to require repetitive tests of affected FFAs, and replacement of any affected FFA that fails a test with a serviceable FFA; as specified in EASA AD 2019–0164, dated July 11, 2019 (''EASA AD 2019–0164'').

Actions Since the SNPRM Was Issued

Since issuance of the SNPRM, EASA AD 2019–0164 has been replaced by EASA AD 2020–0076, dated March 30, 2020 (''EASA AD 2020–0076''), and the FAA has determined that the SNPRM does not adequately address the unsafe condition. In light of these changes, the FAA is considering further rulemaking.

Withdrawal of the SNPRM constitutes only such action and does not preclude the FAA from further rulemaking on this issue, nor does it commit the FAA to any course of action in the future.

FAA's Conclusions

Upon further consideration, the FAA has determined that the SNPRM does not adequately address the identified unsafe condition. Accordingly, the SNPRM is withdrawn.

Regulatory Findings

Since this action only withdraws an SNPRM, it is neither a proposed nor a final rule. This action therefore is not covered under Executive Order 12866, the Regulatory Flexibility Act, or DOT Regulatory Policies and Procedures (44 FR 11034, February 26, 1979).

List of Subjects in 14 CFR Part 39

Air transportation, Aircraft, Aviation safety, Incorporation by reference, Safety.

The Withdrawal

Accordingly, the supplemental notice of proposed rulemaking, Docket No. FAA–2019–0484, which was published in the **Federal Register** on January 21, 2020 (85 FR 3279), is withdrawn.

Issued on June 1, 2020.

Lance T. Gant,

Director, Compliance & Airworthiness Division, Aircraft Certification Service.

[FR Doc. 2020–12226 Filed 6–5–20; 8:45 am]

BILLING CODE 4910–13–P

DEPARTMENT OF TRANSPORTATION

Federal Aviation Administration

14 CFR Part 39

[Docket No. FAA–2020–0464; Product Identifier 2020–NM–040–AD]

RIN 2120–AA64

Airworthiness Directives; Airbus SAS Airplanes

AGENCY: Federal Aviation Administration (FAA), DOT.

ACTION: Notice of proposed rulemaking (NPRM).

SUMMARY: The FAA proposes to supersede Airworthiness Directive (AD) 2017–18–17, which applies to all Airbus SAS Model A300 B4–603, A300 B4–620, A300 B4–622, A300 B4–605R, A300 B4–622R, A300 F4–605R, A300 F4–622R, and A300 C4–605R Variant F airplanes. AD 2017–18–17 requires modifying certain fuselage frames and a repair on certain modified airplanes. Since AD 2017–18–17 was issued, the FAA has determined that, for certain airplanes, a rotating probe inspection must be performed prior to oversizing of the open-holes, and consequently more work is necessary for airplanes that have previously been modified. This proposed AD would continue to require the actions in AD 2017–18–17. This proposed AD would also require, for certain airplanes, an inspection to determine if rotating probe inspections were performed prior to oversizing of the open-holes, and repair if necessary, as specified in a European Union Aviation Safety Agency (EASA) AD, which will be incorporated by reference. The FAA is proposing this AD to address the unsafe condition on these products.

DATES: The FAA must receive comments on this proposed AD by July 23, 2020.

ADDRESSES: You may send comments, using the procedures found in 14 CFR 11.43 and 11.45, by any of the following methods:

- *Federal eRulemaking Portal:* Go to *https://www.regulations.gov.* Follow the instructions for submitting comments.
- *Fax:* 202–493–2251.
- *Mail:* U.S. Department of Transportation, Docket Operations, M–30, West Building Ground Floor, Room W12–140, 1200 New Jersey Avenue SE, Washington, DC 20590.
- *Hand Delivery:* U.S. Department of Transportation, Docket Operations, M–30, West Building Ground Floor, Room W12–140, 1200 New Jersey Avenue SE, Washington, DC 20590, between 9 a.m. and 5 p.m., Monday through Friday, except Federal holidays.

For the material identified in this proposed AD that will be incorporated by reference (IBR), contact the EASA, Konrad-Adenauer-Ufer 3, 50668 Cologne, Germany; phone: +49 221 89990 1000; email: *ADs@easa.europa.eu;* internet: *www.easa.europa.eu.* You may find this IBR material on the EASA website at *https://ad.easa.europa.eu.* You may view this IBR material at the FAA, Airworthiness Products Section, Operational Safety Branch, 2200 South 216th St., Des Moines, WA. For information on the availability of this material at the FAA, call 206–231–3195. It is also available in the AD docket on the internet at *https://www.regulations.gov* by searching for and locating Docket No. FAA–2020–0464.

Examining the AD Docket

You may examine the AD docket on the internet at *https://www.regulations.gov* by searching for and locating Docket No. FAA–2020–0464; or in person at Docket Operations between 9 a.m. and 5 p.m., Monday through Friday, except Federal holidays. The AD docket contains this NPRM, any comments received, and other information. The street address for Docket Operations is listed above. Comments will be available in the AD docket shortly after receipt.

FOR FURTHER INFORMATION CONTACT: Dan Rodina, Aerospace Engineer, Large Aircraft Section, International Validation Branch, FAA, 2200 South 216th St., Des Moines, WA 98198; phone and fax: 206–231–3225; email: *dan.rodina@faa.gov.*

SUPPLEMENTARY INFORMATION:

Comments Invited

The FAA invites you to send any written relevant data, views, or arguments about this proposal. Send your comments to an address listed under the **ADDRESSES** section. Include ''Docket No. FAA–2020–0464; Product Identifier 2020–NM–040–AD'' at the beginning of your comments. The FAA specifically invites comments on the overall regulatory, economic, environmental, and energy aspects of this NPRM. The FAA will consider all comments received by the closing date and may amend this NPRM based on those comments.

The FAA will post all comments received, without change, to *https://www.regulations.gov,* including any personal information you provide. The FAA will also post a report summarizing each substantive verbal contact received about this NPRM.

Discussion

The FAA issued AD 2017–18–17, Amendment 39–19026 (82 FR 43160, September 14, 2017) (''AD 2017–18–17''), which applies to all Airbus SAS Model A300 B4–603, A300 B4–620, A300 B4–622, A300 B4–605R, A300 B4–622R, A300 F4–605R, A300 F4–622R, and A300 C4–605R Variant F airplanes. AD 2017–18–17 requires modifying certain fuselage frames and a repair on certain modified airplanes. The FAA issued AD 2017–18–17 to address cracking of the center section of the fuselage, which could result in a ruptured frame foot and reduced structural integrity of the airplane.

Actions Since AD 2017–18–17 Was Issued

Since AD 2017–18–17 was issued, the FAA has determined that, for certain airplanes, a rotating probe inspection must be performed prior to oversizing of the open-holes, and consequently more work is necessary for airplanes that have previously been modified.

The EASA, which is the Technical Agent for the Member States of the European Union, has issued EASA AD 2020–0051, dated March 11, 2020 (''EASA AD 2020–0051'') (also referred to as the Mandatory Continuing Airworthiness Information, or ''the MCAI''), to correct an unsafe condition for all Airbus SAS Model A300 B4–603, A300 B4–620, A300 B4–622, A300 B4–605R, A300 B4–622R, A300 F4–605R, A300 F4–622R, A300C4–620, and A300 C4–605R Variant F airplanes. EASA AD 2020–0051 supersedes EASA AD 2016–0249, dated December 14, 2016; corrected January 10, 2017 (which corresponds to FAA AD 2017–18–17). Model A300C4–620 airplanes are not certificated by the FAA and are not included on the U.S. type certificate data sheet; this AD therefore does not include those airplanes in the applicability.

This proposed AD was prompted by a report indicating that the material used to manufacture the upper frame feet was changed and negatively affected the fatigue life of the frame feet, and a determination that more work is required for certain airplanes that were previously modified. The FAA is proposing this AD to address cracking of

the center section of the fuselage, which could result in a ruptured frame foot and reduced structural integrity of the airplane. See the MCAI for additional background information.

Explanation of Retained Requirements

Although this proposed AD does not explicitly restate the requirements of AD 2017–18–17, this proposed AD would retain all of the requirements of AD 2017–18–17. Those requirements are referenced in EASA AD 2020–0051, which, in turn, is referenced in paragraph (g) of this proposed AD.

Related IBR Material Under 1 CFR Part 51

EASA AD 2020–0051 describes procedures for modifying certain fuselage frames; a repair on certain modified airplanes; and, for certain airplanes, an inspection to determine if a rotating probe inspection was performed prior to oversizing of the open-holes, contacting the manufacturer for post-modification work instructions, and repair. This material is reasonably available because the interested parties have access to it through their normal course of business or by the means identified in the **ADDRESSES** section.

FAA's Determination and Requirements of This Proposed AD

This product has been approved by the aviation authority of another country, and is approved for operation in the United States. Pursuant to our bilateral agreement with the State of Design Authority, the FAA has been notified of the unsafe condition described in the MCAI referenced above. The FAA is proposing this AD because the agency has evaluated all pertinent information and determined an unsafe condition exists and is likely to exist or develop on other products of the same type design.

Proposed AD Requirements

This proposed AD would require accomplishing the actions specified in EASA AD 2020–0051 described previously, as incorporated by reference, except for any differences identified as exceptions in the regulatory text of this AD.

Explanation of Required Compliance Information

In the FAA's ongoing efforts to improve the efficiency of the AD process, the FAA initially worked with Airbus and EASA to develop a process to use certain EASA ADs as the primary source of information for compliance with requirements for corresponding FAA ADs. The FAA has since coordinated with other manufacturers and civil aviation authorities (CAAs) to use this process. As a result, EASA AD 2020–0051 will be incorporated by reference in the FAA final rule. This proposed AD would, therefore, require compliance with EASA AD 2020–0051 in its entirety, through that incorporation, except for any differences identified as exceptions in the regulatory text of this proposed AD. Using common terms that are the same as the heading of a particular section in the EASA AD does not mean that operators need comply only with that section. For example, where the AD requirement refers to ''all required actions and compliance times,'' compliance with this AD requirement is not limited to the section titled ''Required Action(s) and Compliance Time(s)'' in the EASA AD. Service information specified in EASA AD 2020–0051 that is required for compliance with EASA AD 2020–0051 will be available on the internet at *https://www.regulations.gov* by searching for and locating Docket No. FAA–2020–0464 after the FAA final rule is published.

Costs of Compliance

The FAA estimates that this proposed AD affects 65 airplanes of U.S. registry. The FAA estimates the following costs to comply with this proposed AD:

ESTIMATED COSTS FOR REQUIRED ACTIONS

Action	Labor cost	Parts cost	Cost per product	Cost on U.S. operators
Retained actions from AD 2017–18–17	Up to 235 work-hours × $85 per hour = $19,975.	$23,000	Up to $42,975	Up to $2,793,375.
New proposed actions	1 work-hour × $85 per hour = $85	0	$85	$5,525.

The FAA has received no definitive data that would enable us to provide cost estimates for the on-condition repairs specified in this proposed AD.

Authority for This Rulemaking

Title 49 of the United States Code specifies the FAA's authority to issue rules on aviation safety. Subtitle I, section 106, describes the authority of the FAA Administrator. Subtitle VII: Aviation Programs, describes in more detail the scope of the Agency's authority.

The FAA is issuing this rulemaking under the authority described in Subtitle VII, Part A, Subpart III, Section 44701: ''General requirements.'' Under that section, Congress charges the FAA with promoting safe flight of civil aircraft in air commerce by prescribing regulations for practices, methods, and procedures the Administrator finds necessary for safety in air commerce. This regulation is within the scope of that authority because it addresses an unsafe condition that is likely to exist or develop on products identified in this rulemaking action.

Regulatory Findings

The FAA has determined that this proposed AD would not have federalism implications under Executive Order 13132. This proposed AD would not have a substantial direct effect on the States, on the relationship between the national Government and the States, or on the distribution of power and responsibilities among the various levels of government.

For the reasons discussed above, I certify this proposed regulation:

(1) Is not a ''significant regulatory action'' under Executive Order 12866,

(2) Will not affect intrastate aviation in Alaska, and

(3) Will not have a significant economic impact, positive or negative, on a substantial number of small entities under the criteria of the Regulatory Flexibility Act.

List of Subjects in 14 CFR Part 39

Air transportation, Aircraft, Aviation safety, Incorporation by reference, Safety.

The Proposed Amendment

Accordingly, under the authority delegated to me by the Administrator, the FAA proposes to amend 14 CFR part 39 as follows:

PART 39—AIRWORTHINESS DIRECTIVES

■ 1. The authority citation for part 39 continues to read as follows:

Authority: 49 U.S.C. 106(g), 40113, 44701.

§ 39.13 [Amended]

■ 2. The FAA amends § 39.13 by removing Airworthiness Directive (AD) 2017–18–17, Amendment 39–19026 (82 FR 43160, September 14, 2017), and adding the following new AD:

Airbus SAS: Docket No. FAA–2020–0464; Product Identifier 2020–NM–040–AD.

(a) Comments Due Date

The FAA must receive comments by July 23, 2020.

(b) Affected ADs

This AD replaces AD 2017–18–17, Amendment 39–19026 (82 FR 43160, September 14, 2017) (''AD 2017–18–17'').

(c) Applicability

This AD applies to all Airbus SAS Model A300 B4–603, A300 B4–620, A300 B4–622, A300 B4–605R, A300 B4–622R, A300 F4–605R, A300 F4–622R, and A300 C4–605R Variant F airplanes, certificated in any category.

(d) Subject

Air Transport Association (ATA) of America Code 53, Fuselage.

(e) Reason

This AD was prompted by a report indicating that the material used to manufacture the upper frame feet was changed and negatively affected the fatigue life of the frame feet, and a determination that more work is required for certain airplanes that were previously modified. The FAA is issuing this AD to address cracking of the center section of the fuselage, which could result in a ruptured frame foot and reduced structural integrity of the airplane.

(f) Compliance

Comply with this AD within the compliance times specified, unless already done.

(g) Requirements

Except as specified in paragraph (h) of this AD: Comply with all required actions and compliance times specified in, and in accordance with, European Union Aviation Safety Agency (EASA) AD 2020–0051, dated March 11, 2020 (''EASA AD 2020–0051'').

(h) Exceptions to EASA AD 2020–0051

(1) Where EASA AD 2020–0051 refers to its effective date, this AD requires using the effective date of this AD.

(2) The ''Remarks'' section of EASA AD 2020–0051 does not apply to this AD.

(3) For airplanes on which the modification specified in Airbus Service Bulletin A300–53–6178 has been done: Where paragraph (4) of EASA AD 2020–0051 specifies to do certain actions ''no later than 6 months (estimated by projection of airplane usage) prior to exceeding 24,500 flight cycles or 42,700 flight hours, whichever occurs first, after Airbus Service Bulletin A300–53–6178 embodiment (at any revision),'' this AD requires doing those actions prior to exceeding 24,100 total flight cycles or 42,000 total flight hours, whichever occurs first after doing the modification.

(i) Other FAA AD Provisions

The following provisions also apply to this AD:

(1) *Alternative Methods of Compliance (AMOCs):* The Manager, Large Aircraft Section, International Validation Branch, FAA, has the authority to approve AMOCs for this AD, if requested using the procedures found in 14 CFR 39.19. In accordance with 14 CFR 39.19, send your request to your principal inspector or local Flight Standards District Office, as appropriate. If sending information directly to the Large Aircraft Section, International Validation Branch, send it to the attention of the person identified in paragraph (j)(2) of this AD. Information may be emailed to: *9-ANM-116-AMOC-REQUESTS@faa.gov.* Before using any approved AMOC, notify your appropriate principal inspector, or lacking a principal inspector, the manager of the local flight standards district office/certificate holding district office.

(2) *Contacting the Manufacturer:* For any requirement in this AD to obtain instructions from a manufacturer, the instructions must be accomplished using a method approved by the Manager, Large Aircraft Section, International Validation Branch, FAA; or EASA; or Airbus SAS's EASA Design Organization Approval (DOA). If approved by the DOA, the approval must include the DOA-authorized signature.

(3) *Required for Compliance (RC)*: For any service information referenced in EASA AD 2020–0051 that contains RC procedures and tests: Except as required by paragraph (i)(2) of this AD, RC procedures and tests must be done to comply with this AD; any procedures or tests that are not identified as RC are recommended. Those procedures and tests that are not identified as RC may be deviated from using accepted methods in accordance with the operator's maintenance or inspection program without obtaining approval of an AMOC, provided the procedures and tests identified as RC can be done and the airplane can be put back in an airworthy condition. Any substitutions or changes to procedures or tests identified as RC require approval of an AMOC.

(j) Related Information

(1) For information about EASA AD 2020–0051, contact the EASA, Konrad-Adenauer-Ufer 3, 50668 Cologne, Germany; phone: +49 221 89990 6017; email: *ADs@easa.europa.eu;* internet: *www.easa.europa.eu.* You may find this EASA AD on the EASA website at *https://ad.easa.europa.eu.* You may view this material at the FAA, Airworthiness Products Section, Operational Safety Branch, 2200 South 216th St., Des Moines, WA. For information on the availability of this material at the FAA, call 206–231–3195. This material may be found in the AD docket on the internet at *https://www.regulations.gov* by searching for and locating Docket No. FAA–2020–0464.

(2) For more information about this AD, contact Dan Rodina, Aerospace Engineer, Large Aircraft Section, International Validation Branch, FAA, 2200 South 216th St., Des Moines, WA 98198; phone and fax: 206–231–3225; email: *dan.rodina@faa.gov.*

Issued on June 1, 2020.

Lance T. Gant,

Director, Compliance & Airworthiness Division, Aircraft Certification Service.

[FR Doc. 2020–12225 Filed 6–5–20; 8:45 am]

BILLING CODE 4910–13–P

DEPARTMENT OF TRANSPORTATION

Federal Aviation Administration

14 CFR Part 39

[Docket No. FAA–2020–0554; Product Identifier 2016–SW–088–AD]

RIN 2120–AA64

Airworthiness Directives; Leonardo S.p.a. Helicopters

AGENCY: Federal Aviation Administration (FAA), DOT.

ACTION: Notice of proposed rulemaking (NPRM).

SUMMARY: The FAA proposes to adopt a new airworthiness directive (AD) for Leonardo S.p.a. (Leonardo) Model AB139 and AW139 helicopters. This proposed AD would require removing certain main gearbox (MGB) input modules from service. This proposed AD was prompted by the discovery that a batch of duplex bearings, which are installed on the MGB input modules, are defective. The actions of this proposed AD are intended to address an unsafe condition on these products.

DATES: The FAA must receive comments on this proposed AD by July 23, 2020.

ADDRESSES: You may send comments by any of the following methods:

- *Federal eRulemaking Docket:* Go to *https://www.regulations.gov.* Follow the online instructions for sending your comments electronically.
- *Fax:* 202–493–2251.
- *Mail:* Send comments to the U.S. Department of Transportation, Docket Operations, M–30, West Building Ground Floor, Room W12–140, 1200 New Jersey Avenue SE, Washington, DC 20590–0001.
- *Hand Delivery:* Deliver to the ''Mail'' address between 9 a.m. and 5 p.m., Monday through Friday, except Federal holidays.

Examining the AD Docket

You may examine the AD docket on the internet at *https://*

www.regulations.gov by searching for and locating Docket No. FAA–2020–0554; or in person at the Docket Operations Office between 9 a.m. and 5 p.m., Monday through Friday, except Federal holidays. The AD docket contains this proposed AD, the European Aviation Safety Agency (now European Union Aviation Safety Agency) (EASA) AD, any comments received, and other information. The street address for Docket Operations is listed above. Comments will be available in the AD docket shortly after receipt.

For service information identified in this proposed rule, contact Leonardo S.p.a. Helicopters, Emanuele Bufano, Head of Airworthiness, Viale G.Agusta 520, 21017 C.Costa di Samarate (Va) Italy; telephone +39–0331–225074; fax +39–0331–229046; or at *https://www.leonardocompany.com/en/home.* You may view the referenced service information at the FAA, Office of the Regional Counsel, Southwest Region, 10101 Hillwood Pkwy., Room 6N–321, Fort Worth, TX 76177.

FOR FURTHER INFORMATION CONTACT: Rao Edupuganti, Aviation Safety Engineer, Regulations and Policy Section, Rotorcraft Standards Branch, FAA, 10101 Hillwood Pkwy., Fort Worth, TX 76177; telephone 817–222–5110; email *rao.edupuganti@faa.gov.*

SUPPLEMENTARY INFORMATION:

Comments Invited

The FAA invites you to participate in this rulemaking by submitting written comments, data, or views. The FAA also invites comments relating to the economic, environmental, energy, or federalism impacts that might result from adopting the proposals in this document. The most helpful comments reference a specific portion of the proposal, explain the reason for any recommended change, and include supporting data. To ensure the docket does not contain duplicate comments, commenters should send only one copy of written comments, or if comments are filed electronically, commenters should submit only one time.

The FAA will file in the docket all comments received, as well as a report summarizing each substantive public contact with FAA personnel concerning this proposed rulemaking. Before acting on this proposal, the FAA will consider all comments received on or before the closing date for comments. The FAA will consider comments filed after the comment period has closed if it is possible to do so without incurring expense or delay. The FAA may change this proposal in light of the comments received.

Discussion

EASA, which is the Technical Agent for the Member States of the European Union, has issued EASA AD 2016–0255R1, dated January 17, 2017 (EASA AD 2016–0255R1) to correct an unsafe condition for Leonardo (formerly Finmeccanica S.p.A., AgustaWestland Philadelphia Corporation, Agusta Aerospace Corporation) Model AB139 and AW139 helicopters with certain serial-numbered MGB input modules part-number (P/N) 3K6320A00135 or P/N 3K6320A00136 installed. EASA advises that the supplier of a batch of duplex bearings installed on MGB input modules reported that the bearings were defective, due to a quality control issue. This condition, if not detected or corrected, could lead to damage of the input module duplex ball bearing inner race, possibly resulting in loss of engine power and reduced control of the helicopter. Accordingly, EASA AD 2016–0255R1 requires removing the affected MGB input modules from service.

FAA's Determination

These helicopters have been approved by EASA and are approved for operation in the United States. Pursuant to the FAA's bilateral agreement with the European Union, EASA has notified the FAA about the unsafe condition described in its AD. The FAA is proposing this AD after evaluating all known relevant information and determining that an unsafe condition is likely to exist or develop on other helicopters of the same type designs.

Related Service Information

The FAA reviewed Leonardo Helicopters Bollettino Tecnico No. 139–303, dated September 20, 2016, which specifies replacing certain duplex bearings on MGB left-hand and right-hand input modules on Model AB139 and AW139 helicopters.

Proposed AD Requirements

This proposed AD would require compliance with certain procedures described in the manufacturer's service bulletin. For helicopters with one affected MGB input module installed, this proposed AD would require the affected MGB input module to be removed from service within 1200 hours time-in-service (TIS). For helicopters with two affected MGB input modules installed, this proposed AD would require both affected MGB input modules to be removed from service within 300 hours TIS.

Differences Between This Proposed AD and the EASA AD

The EASA AD requires returning affected parts and sending information to Leonardo; however, this proposed AD would not.

Costs of Compliance

The FAA estimates that this proposed AD would affect 71 helicopters of U.S. Registry. The FAA estimates that operators may incur the following costs in order to comply with this AD. Labor costs are estimated at $85 per work-hour.

Replacing one input module would require about 60 work-hours for an estimated cost of $5,100 and parts would cost about $84,847 for an estimated cost of $89,947 per helicopter.

Replacing two input modules would require about 100 work-hours for an estimated cost of $8,500 and parts would cost about $169,694 for an estimated cost of $178,194 per helicopter.

Authority for This Rulemaking

Title 49 of the United States Code specifies the FAA's authority to issue rules on aviation safety. Subtitle I, section 106, describes the authority of the FAA Administrator. Subtitle VII: Aviation Programs, describes in more detail the scope of the Agency's authority.

The FAA is issuing this rulemaking under the authority described in Subtitle VII, Part A, Subpart III, Section 44701: General requirements. Under that section, Congress charges the FAA with promoting safe flight of civil aircraft in air commerce by prescribing regulations for practices, methods, and procedures the Administrator finds necessary for safety in air commerce. This regulation is within the scope of that authority because it addresses an unsafe condition that is likely to exist or develop on products identified in this rulemaking action.

Regulatory Findings

The FAA determined that this proposed AD would not have federalism implications under Executive Order 13132. This proposed AD would not have a substantial direct effect on the States, on the relationship between the national Government and the States, or on the distribution of power and responsibilities among the various levels of government.

For the reasons discussed, I certify this proposed regulation:

1. Is not a ''significant regulatory action'' under Executive Order 12866,

2. Will not affect intrastate aviation in Alaska, and

3. Will not have a significant economic impact, positive or negative, on a substantial number of small entities under the criteria of the Regulatory Flexibility Act.

List of Subjects in 14 CFR Part 39

Air transportation, Aircraft, Aviation safety, Incorporation by reference, Safety.

The Proposed Amendment

Accordingly, under the authority delegated to me by the Administrator, the FAA proposes to amend 14 CFR part 39 as follows:

PART 39—AIRWORTHINESS DIRECTIVES

■ 1. The authority citation for part 39 continues to read as follows:

Authority: 49 U.S.C. 106(g), 40113, 44701.

§ 39.13 [Amended]

■ 2. The FAA amends § 39.13 by adding the following new airworthiness directive (AD):

Leonardo S.p.a.: Docket No. FAA–2020–0554; Product Identifier 2016–SW–088–AD.

(a) Applicability

This AD applies to Leonardo S.p.a. Model AB139 and AW139 helicopters, certified in any category, with main gearbox (MGB) input module part number (P/N) 3K6320A00135 with serial number (S/N) KHI–200 or P/N 3K6320A00136 with an S/N listed in Table 1 to this paragraph installed.

P/N 3K6320A00136 MGB Input Modules (S/N)					
KHI-395	KHI-E82	KHI-E87	KHI-E88	KHI-E89	KHI-E90
KHI-E91	KHI-E92	KHI-E94	KHI-E98	KHI-F01	KHI-F04
KHI-F07	KHI-F11	KHI-F13	KHI-F15	KHI-F16	KHI-F22
KHI-F23	KHI-F26	KHI-F27	KHI-F29	KHI-F31	KHI-F34
KHI-F35	KHI-F39	KHI-F40	KHI-F45	KHI-F46	KHI-F51
KHI-F53	KHI-F55	KHI-F58	KHI-F59	KHI-F60	KHI-F63
KHI-F74	KHI-F75	KHI-F87	KHI-F92	KHI-F93	KHI-F96
KHI-G09	KHI-G10	KHI-G15	KHI-G18	KHI-G19	KHI-G21
KHI-G25	KHI-G26	KHI-G31	KHI-G32	KHI-G35	KHI-G38
KHI-G39	KHI-G41	KHI-G44	KHI-G56	KHI-G58	KHI-G60
KHI-G62	KHI-G63	KHI-G65	KHI-G68	KHI-G70	KHI-G71
KHI-G72	KHI-G76	KHI-G77	KHI-G79	KHI-G81	

Table 1 to paragraph (a)

(b) Unsafe Condition

This AD defines the unsafe condition as defective duplex bearings on MGB input modules, due to a quality control issue. This condition could result in damage including corrosion and cracking, which could result in excessive heat of the input module duplex ball bearing inner race and subsequent loss of engine power and loss of helicopter control.

(c) Comments Due Date

The FAA must receive comments by July 23, 2020.

(d) Compliance

You are responsible for performing each action required by this AD within the specified compliance time unless it has already been accomplished prior to that time.

(e) Required Actions

(1) If the P/N and S/N of both MGB input modules are listed in paragraph (a) of this AD, within 300 hours time-in-service (TIS), remove from service each MGB input module.

(2) If the P/N and S/N of only one MGB input module are listed in paragraph (a) of this AD, within 1,200 hours TIS, remove from service that MGB input module.

(3) After the effective date of this AD, do not install an MGB input module with a P/N and S/N listed in paragraph (a) of this AD on any helicopter.

(f) Alternative Methods of Compliance (AMOCs)

(1) The Manager, Safety Management Section, Rotorcraft Standards Branch, FAA, may approve AMOCs for this AD. Send your proposal to: Rao Edupuganti, Aviation Safety Engineer, Regulations and Policy Section, Rotorcraft Standards Branch, FAA, 10101 Hillwood Pkwy., Fort Worth, TX 76177; telephone 817–222–5110; email *9-ASW-FTW-AMOC-Requests@faa.gov.*

(2) For operations conducted under a 14 CFR part 119 operating certificate or under 14 CFR part 91, subpart K, the FAA suggests that you notify your principal inspector, or lacking a principal inspector, the manager of the local flight standards district office or certificate holding district office before

operating any aircraft complying with this AD through an AMOC.

(g) Additional Information

The subject of this AD is addressed in European Aviation Safety Agency (now European Union Aviation Safety Agency) (EASA) AD No. 2016–0255R1, dated January 17, 2017. You may view the EASA AD on the internet at *https://www.regulations.gov* in the AD Docket.

(h) Subject

Joint Aircraft Service Component (JASC) Code: 6320, Rotor Drive—Gearbox.

Issued on June 1, 2020.

Lance T. Gant,

Director, Compliance & Airworthiness Division, Aircraft Certification Service.

[FR Doc. 2020–12155 Filed 6–5–20; 8:45 am]

BILLING CODE 4910–13–P

DEPARTMENT OF TRANSPORTATION

Federal Aviation Administration

14 CFR Part 39

[Docket No. FAA–2020–0555; Project Identifier AD–2020–00615–E]

RIN 2120–AA64

Airworthiness Directives; General Electric Company Turbofan Engines

AGENCY: Federal Aviation Administration (FAA), DOT.

ACTION: Notice of proposed rulemaking (NPRM).

SUMMARY: The FAA proposes to adopt a new airworthiness directive (AD) for certain General Electric Company (GE) GEnx–1B64/P2, –1B67/P2, –1B70/P2, –1B70C/P2,–1B70/75/P2, –1B74/75/P2, –1B76/P2, –1B76A/P2, and GEnx–2B67/P model turbofan engines. This proposed AD was prompted by the detection of melt-related freckles in the billet, which may reduce the life limits of certain high-pressure turbine (HPT) rotor stage 2 disks and a certain stages 6–10 compressor rotor spool. This proposed AD would require the removal of certain HPT rotor stage 2 disk and the removal of a certain stages 6–10 compressor rotor spool before reaching their new life limits. The FAA is proposing this AD to address the unsafe condition on these products.

DATES: The FAA must receive comments on this proposed AD by July 23, 2020.

ADDRESSES: You may send comments, using the procedures found in 14 CFR 11.43 and 11.45, by any of the following methods:

- *Federal eRulemaking Portal:* Go to *https://www.regulations.gov.* Follow the instructions for submitting comments.
- *Fax:* 202–493–2251.
- *Mail:* U.S. Department of Transportation, Docket Operations, M–30, West Building Ground Floor, Room W12–140, 1200 New Jersey Avenue SE, Washington, DC 20590.
- *Hand Delivery:* Deliver to Mail address above between 9 a.m. and 5 p.m., Monday through Friday, except Federal holidays.

For service information identified in this NPRM, contact General Electric Company, GE Aviation, Room 285, 1 Neumann Way, Cincinnati, OH 45215; phone: 513–552–3272; email: *aviation.fleetsupport@ge.com.* You may view this service information at the FAA, Airworthiness Products Section, Operational Safety Branch, 1200 District Avenue, Burlington, MA 01803. For information on the availability of this material at the FAA, call 781–238–7759.

Examining the AD Docket

You may examine the AD docket on the internet at *https://www.regulations.gov* by searching for and locating Docket No. FAA–2020–0555; or in person at Docket Operations between 9 a.m. and 5 p.m., Monday through Friday, except Federal holidays. The AD docket contains this NPRM, any comments received, and other information. The street address for Docket Operations is listed above. Comments will be available in the AD docket shortly after receipt.

FOR FURTHER INFORMATION CONTACT: Mehdi Lamnyi, Aerospace Engineer, ECO Branch, FAA, 1200 District Avenue, Burlington, MA 01803; phone: 781–238–7743; fax: 781–238–7199; email: *Mehdi.Lamnyi@faa.gov.*

SUPPLEMENTARY INFORMATION:

Comments Invited

The FAA invites you to send any written relevant data, views, or arguments about this proposal. Send your comments to an address listed under the **ADDRESSES** section. Include ''Docket No. FAA–2020–0555; Project Identifier AD–2020–00615–E'' at the beginning of your comments. The FAA specifically invites comments on the overall regulatory, economic, environmental, and energy aspects of this NPRM. The FAA will consider all comments received by the closing date and may amend this NPRM because of those comments.

Except for Confidential Business Information (CBI) as described in the following paragraph, and other information as described in 14 CFR 11.35, the FAA will post all comments received, without change, to *https://www.regulations.gov,* including any personal information you provide. The FAA will also post a report summarizing each substantive verbal contact received about this NPRM.

Confidential Business Information

Confidential Business Information (CBI) is commercial or financial information that is both customarily and actually treated as private by its owner. Under the Freedom of Information Act (FOIA) (5 U.S.C. 552), CBI is exempt from public disclosure. If your comments responsive to this AD contain commercial or financial information that is customarily treated as private, that you actually treat as private, and that is relevant or responsive to this AD, it is important that you clearly designate the submitted comments as CBI. Please mark each page of your submission containing CBI as ''PROPIN.'' The FAA will treat such marked submissions as confidential under the FOIA, and they will not be placed in the public docket of this AD. Submissions containing CBI should be sent to Mehdi Lamnyi, Aerospace Engineer, ECO Branch, FAA, 1200 District Avenue, Burlington, MA 01803. Any commentary that the FAA receives which is not specifically designated as CBI will be placed in the public docket for this rulemaking.

Discussion

The FAA was notified of the detection of melt-related freckles in the billet during the forging inspection of HPT disks, which may reduce the life limits of certain HPT rotor stage 2 disks and a certain stages 6–10 compressor rotor spool. The inspection process in place at the time of production did not identify these freckles. The manufacturer determined the need to reduce the life limits of the affected HPT rotor stage 2 disks and a certain stages 6–10 compressor rotor spool. This AD requires removal of these affected parts before reaching the new life limits. This condition, if not addressed, could result in uncontained release of both the HPT rotor stage 2 disk and the stages 6–10 compressor rotor spool, damage to the engine, and damage to the aircraft.

Related Service Information

The FAA reviewed GE GEnx–1B Service Bulletin (SB) 72–0473 R00, dated April 14, 2020; GE GEnx–1B SB 72–0474 R00, dated April 14, 2020; and GE GEnx–2B SB 72–0416 R00, dated April 14, 2020. GE GEnx–1B SB 72–0473 R00 describes procedures for removing and replacing the HPT rotor stage 2 disks on GE GEnx–1B model engines. GE GEnx–1B SB 72–0474 R00 describes procedures for removing and replacing the stages 6–10 compressor

rotor spool on GE GEnx–1B model engines. GE GEnx–2B SB 72–0416 R00 describes procedures for removing and replacing the HPT rotor stage 2 disks on GE GEnx–2B model engines.

FAA's Determination

The FAA is proposing this AD because the Agency evaluated all the relevant information and determined the unsafe condition described previously is likely to exist or develop in other products of the same type design.

Proposed AD Requirements

This proposed AD would require the removal of certain HPT rotor stage 2 disk and the removal of a certain stages 6–10 compressor rotor spool before reaching their new life limits.

Interim Action

The FAA considers this proposed AD interim action. The investigation into identifying the complete population of affected parts is on-going and the FAA will consider further rulemaking depending on the results of the investigation.

Costs of Compliance

The FAA estimates that this proposed AD affects two engines installed on airplanes of U.S. registry; one engine requiring the HPT rotor stage 2 disk replacement and one engine requiring the stages 6–10 compressor rotor spool replacement.

The FAA estimates the following costs to comply with this proposed AD:

ESTIMATED COSTS

Action	Labor cost	Parts cost	Cost per product	Cost on U.S. operators
Remove and replace the HPT rotor stage 2 disk.	1,500 work-hours × $85 per hour = $127,500	$458,900	$586,400	$586,400
Remove and replace the stages 6–10 compressor rotor spool.	600 work-hours × $85 per hour = $51,000	1,018,600	1,069,600	1,069,600

Authority for This Rulemaking

Title 49 of the United States Code specifies the FAA's authority to issue rules on aviation safety. Subtitle I, section 106, describes the authority of the FAA Administrator. Subtitle VII: Aviation Programs, describes in more detail the scope of the Agency's authority.

The FAA is issuing this rulemaking under the authority described in Subtitle VII, Part A, Subpart III, Section 44701: ''General requirements.'' Under that section, Congress charges the FAA with promoting safe flight of civil aircraft in air commerce by prescribing regulations for practices, methods, and procedures the Administrator finds necessary for safety in air commerce. This regulation is within the scope of that authority because it addresses an unsafe condition that is likely to exist or develop on products identified in this rulemaking action.

Regulatory Findings

The FAA determined that this proposed AD would not have federalism implications under Executive Order 13132. This proposed AD would not have a substantial direct effect on the States, on the relationship between the national Government and the States, or on the distribution of power and responsibilities among the various levels of government.

For the reasons discussed above, I certify this proposed regulation:

(1) Is not a ''significant regulatory action'' under Executive Order 12866,

(2) Will not affect intrastate aviation in Alaska, and

(3) Will not have a significant economic impact, positive or negative, on a substantial number of small entities under the criteria of the Regulatory Flexibility Act.

List of Subjects in 14 CFR Part 39

Air transportation, Aircraft, Aviation safety, Incorporation by reference, Safety.

The Proposed Amendment

Accordingly, under the authority delegated to me by the Administrator, the FAA proposes to amend 14 CFR part 39 as follows:

PART 39—AIRWORTHINESS DIRECTIVES

■ 1. The authority citation for part 39 continues to read as follows:

Authority: 49 U.S.C. 106(g), 40113, 44701.

§ 39.13 [Amended]

■ 2. The FAA amends § 39.13 by adding the following new airworthiness directive (AD):

General Electric Company: Docket No. FAA–2020–0555; Project Identifier AD–2020–00615–E.

(a) Comments Due Date

The FAA must receive comments by July 23, 2020.

(b) Affected ADs

None.

(c) Applicability

This AD applies to all General Electric Company (GE) GEnx–1B64/P2, –1B67/P2, –1B70/P2, –1B70C/P2, –1B70/75/P2, –1B74/75/P2, –1B76/P2, –1B76A/P2, and GEnx–2B67/P model turbofan engines with an engine serial number (S/N) listed in Figure 1 to paragraph (c) of this AD.

Figure 1 to Paragraph (c) – Applicable Engine S/N

Engine S/N
956-771
956-899
956-944
958-395
958-408
958-414
958-423
959-612
959-616
959-757

(d) Subject

Joint Aircraft System Component (JASC) Code 7250, Turbine Section.

(e) Unsafe Condition

This AD was prompted by the detection of melt-related freckles in the billet, which may reduce the life limits of certain high-pressure turbine (HPT) rotor stage 2 disks and a certain stages 6–10 compressor rotor spool. The FAA is issuing this AD to prevent failure of the HPT rotor stage 2 disk and stages 6–10 compressor rotor spool. The unsafe condition, if not addressed, could result in uncontained release of both the HPT rotor stage 2 disk and the stages 6–10 compressor rotor spool, damage to the engine, and damage to the aircraft.

(f) Compliance

Comply with this AD within the compliance times specified, unless already done.

(g) Required Actions

After the effective date of this AD, before the parts accumulate the cycles since new (CSN) threshold listed in Table 1 to paragraph (g) of this AD, remove the affected HPT rotor stage 2 disk and the stages 6–10 compressor rotor spool from service and replace with parts eligible for installation.

Table 1 to Paragraph (g) – Affected Parts and CSN Threshold

Part Name	Part P/N	Part S/N	CSN Threshold
HPT rotor stage 2 disk	2383M86P02	TMT18D6T	1,000
HPT rotor stage 2 disk	2383M86P02	TMT18D6U	1,000
HPT rotor stage 2 disk	2383M86P02	TMT18JC4	1,000
HPT rotor stage 2 disk	2383M86P02	TMT18NGC	1,000
HPT rotor stage 2 disk	2383M86P02	TMT1985C	1,000
HPT rotor stage 2 disk	2383M86P02	TMT3UA34	2,800
HPT rotor stage 2 disk	2383M86P02	TMT3UA55	2,800
HPT rotor stage 2 disk	2383M86P02	TMT4CT46	2,000
HPT rotor stage 2 disk	2383M86P02	TMT4CT47	2,000
Stages 6-10 compressor rotor spool	2628M56G01	GWN10ECM	6,500

(h) Installation Prohibition

After the effective date of this AD, do not install the affected HPT rotor stage 2 disks or the stages 6–10 compressor rotor spool identified in Table 1 to paragraph (g) of this AD on an engine.

(i) Alternative Methods of Compliance (AMOCs)

(1) The Manager, ECO Branch, FAA, has the authority to approve AMOCs for this AD, if requested using the procedures found in 14 CFR 39.19. In accordance with 14 CFR 39.19, send your request to your principal inspector or local Flight Standards District Office, as appropriate. If sending information directly to the manager of the certification office, send it to the attention of the person identified in paragraph (j)(1) of this AD. You may email your request to: *ANE-AD-AMOC@faa.gov.*

(2) Before using any approved AMOC, notify your appropriate principal inspector, or lacking a principal inspector, the manager of the local flight standards district office/certificate holding district office.

(j) Related Information

(1) For more information about this AD, contact Mehdi Lamnyi, Aerospace Engineer, ECO Branch, FAA, 1200 District Avenue, Burlington, MA 01803; phone: 781–238–7743; fax: 781–238–7199; email: *Mehdi.Lamnyi@faa.gov.*

(2) For service information identified in this AD, contact General Electric Company, GE Aviation, Room 285, 1 Neumann Way, Cincinnati, OH 45215; phone: 513–552–3272; email: *aviation.fleetsupport@ge.com.* You may view this referenced service information at the FAA, Airworthiness Products Section, Operational Safety Branch, 1200 District Avenue, Burlington, MA 01803. For information on the availability of this material at the FAA, call 781–238–7759.

Issued on June 1, 2020.

Lance T. Gant,

Director, Compliance & Airworthiness Division, Aircraft Certification Service.

[FR Doc. 2020–12160 Filed 6–5–20; 8:45 am]

BILLING CODE 4910–13–P

DEPARTMENT OF TRANSPORTATION

Federal Aviation Administration

14 CFR Part 39

[Docket No. FAA–2020–0557; Project Identifier AD–2020–00541–E]

RIN 2120–AA64

Airworthiness Directives; General Electric Company Turbofan Engines

AGENCY: Federal Aviation Administration (FAA), DOT.

ACTION: Notice of proposed rulemaking (NPRM).

SUMMARY: The FAA proposes to supersede Airworthiness Directive (AD) 2018–15–04, which applies to certain General Electric Company (GE) CF6–80A, CF6–80A1, CF6–80A2, CF6–80A3, CF6–80C2A1, CF6–80C2A2, CF6–80C2A3, CF6–80C2A5, CF6–80C2A5F, CF6–80C2A8, CF6–80C2B1, CF6–80C2B1F, CF6–80C2B2, CF6–80C2B2F, CF6–80C2B4, CF6–80C2B4F, CF6–80C2B5F, CF6–80C2B6, CF6–80C2B6F, CF6–80C2B6FA, CF6–80C2B7F, CF6–80C2D1F, CF6–80C2L1F, and CF6–80C2K1F model turbofan engines. AD 2018–15–04 requires ultrasonic inspection (UI) of high-pressure turbine (HPT) stage 1 and stage 2 disks. Since we issued AD 2018–15–04, GE determined the need to expand the population of affected disks. This proposed AD would retain the required inspections while expanding the population of affected disks. The FAA is proposing this AD to address the unsafe condition on these products.

DATES: The FAA must receive comments on this proposed AD by July 23, 2020.

ADDRESSES: You may send comments, using the procedures found in 14 CFR 11.43 and 11.45, by any of the following methods:

- *Federal eRulemaking Portal:* Go to *https://www.regulations.gov.* Follow the instructions for submitting comments.
- *Fax:* 202–493–2251.
- *Mail:* U.S. Department of Transportation, Docket Operations, M–30, West Building Ground Floor, Room W12–140, 1200 New Jersey Avenue SE, Washington, DC 20590.
- *Hand Delivery:* Deliver to Mail address above between 9 a.m. and 5 p.m., Monday through Friday, except Federal holidays.

For service information identified in this NPRM, contact General Electric Company, 1 Neumann Way, Cincinnati, OH 45215, United States; phone: (513) 552–3272; email: *aviation.fleetsupport@ae.ge.com;* website: *www.ge.com.* You may view this service information at the FAA, Airworthiness Products Section, Operational Safety Branch, 1200 District Avenue, Burlington, MA 01803. For information on the availability of this material at the FAA, call 781–238–7759.

Examining the AD Docket

You may examine the AD docket on the internet at *https://www.regulations.gov* by searching for and locating Docket No. FAA–2020–0557; or in person at Docket Operations between 9 a.m. and 5 p.m., Monday through Friday, except Federal holidays. The AD docket contains this NPRM, any comments received, and other information. The street address for Docket Operations is listed above. Comments will be available in the AD docket shortly after receipt.

FOR FURTHER INFORMATION CONTACT: Scott Stevenson, Aerospace Engineer, ECO Branch, FAA, 1200 District Avenue, Burlington, MA 01803; phone: (781) 238–7132; fax: (781) 238–7199; email: *Scott.M.Stevenson@faa.gov.*

SUPPLEMENTARY INFORMATION:

Comments Invited

The FAA invites you to send any written relevant data, views, or arguments about this proposed AD. Send your comments to an address listed under the **ADDRESSES** section. Include ''Docket No. FAA–2020–0557; Project Identifier AD–2020–00541–E'' at the beginning of your comments. The FAA specifically invites comments on the overall regulatory, economic, environmental, and energy aspects of this NPRM. The FAA will consider all comments received by the closing date and may amend this NPRM because of those comments.

Except for Confidential Business Information (CBI) as described in the following paragraph, and other information as described in 14 CFR 11.35, the FAA will post all comments received, without change, to *https://www.regulations.gov,* including any personal information you provide. The FAA will also post a report summarizing each substantive verbal contact received about this proposed AD.

Confidential Business Information

Confidential Business Information (CBI) is commercial or financial information that is both customarily and actually treated as private by its owner. Under the Freedom of Information Act (FOIA) (5 U.S.C. 552), CBI is exempt from public disclosure. If your comments responsive to this NPRM contain commercial or financial information that is customarily treated as private, that you actually treat as private, and that is relevant or responsive to this NPRM, it is important that you clearly designate the submitted comments as CBI. Please mark each page of your submission containing CBI as ''PROPIN.'' The FAA will treat such marked submissions as confidential under the FOIA, and they will not be placed in the public docket of this NPRM. Submissions containing CBI should be sent to Scott Stevenson, Aerospace Engineer, ECO Branch, FAA, 1200 District Avenue, Burlington, MA 01803. Any commentary that the FAA receives which is not specifically designated as CBI will be placed in the public docket for this rulemaking.

Discussion

The FAA issued AD 2018–15–04, Amendment 39–19336 (83 FR 43739, August 28, 2018), (''AD 2018–15–04''), for certain GE CF6–80A, CF6–80A1, CF6–80A2, CF6–80A3, CF6–80C2A1, CF6–80C2A2, CF6–80C2A3, CF6–80C2A5, CF6–80C2A5F, CF6–80C2A8, CF6–80C2B1, CF6–80C2B1F, CF6–80C2B2, CF6–80C2B2F, CF6–80C2B4, CF6–80C2B4F, CF6–80C2B5F, CF6–80C2B6, CF6–80C2B6F, CF6–80C2B6FA, CF6–80C2B7F, CF6–80C2D1F, CF6–80C2L1F, and CF6–80C2K1F model turbofan engines. AD 2018–15–04 requires a UI of HPT stage 1 and 2 disks. AD 2018–15–04 resulted from an uncontained failure of a HPT stage 2 disk that resulted in a fire. The FAA issued AD 2018–15–04 to prevent failure of the HPT stage 1 and the HPT stage 2 disks, uncontained HPT disk release, damage to the engine, and damage to the airplane.

Actions Since AD 2018–15–04 Was Issued

Since the FAA issued AD 2018–15–04, GE determined that additional serial-numbered HPT stage 1 and stage 2 disks should be included in the population of affected disks. GE therefore issued revisions to its service information to include the additional affected disks.

Related Service Information Under 1 CFR Part 51

The FAA reviewed GE CF6–80C2 Service Bulletin (SB) 72–1562 R04, dated May 29, 2019. The SB describes procedures for UI of CF6–80C2 turbofan engine HPT stage 1 and 2 disks. The FAA also reviewed GE CF6–80A SB 72–0869 R02, dated May 29, 2019. The SB describes procedures for UI of CF6–80A turbofan engine HPT stage 2 disks. This service information is reasonably available because the interested parties have access to it through their normal course of business or by the means identified in the **ADDRESSES** section.

FAA's Determination

The FAA is proposing this AD because the agency evaluated all the relevant information and determined the unsafe condition described previously is likely to exist or develop in other products of the same type design.

Proposed AD Requirements

This proposed AD would retain all the requirements of AD 2018–15–04. This proposed AD would expand the population of affected disks to include additional serial-numbered HPT stage 1 and stage 2 disks.

Costs of Compliance

The FAA estimates that this proposed AD affects 1,512 engines installed on airplanes, of U.S. registry.

The FAA estimates the following costs to comply with this proposed AD:

ESTIMATED COSTS

Action	Labor cost	Parts cost	Cost per product	Cost on U.S. operators
Ultrasonic Inspection of HPT disk	10 work-hours × $85 per hour = $850.	$0	$850	$1,285,200

The FAA estimates the following costs to do any necessary replacements that would be required based on the results of the proposed inspection. The FAA has no way of determining the number of aircraft that might need these replacements:

ON-CONDITION COSTS

Action	Labor cost	Parts cost	Cost per product
Replace CF6–80C2 HPT Stage 1 disk	0.25 work-hours × $85 per hour = $21.25	$799,700	$799,721.25
Replace CF6–80C2 HPT Stage 2 disk	0.25 work-hours × $85 per hour = $21.25	364,600	364,621.25
Replace CF6–80A HPT Stage 2 disk	0.25 work-hours × $85 per hour = $21.25	344,000	344,021.25

Authority for This Rulemaking

Title 49 of the United States Code specifies the FAA's authority to issue rules on aviation safety. Subtitle I, Section 106, describes the authority of the FAA Administrator. Subtitle VII, Aviation Programs, describes in more detail the scope of the Agency's authority.

The FAA is issuing this rulemaking under the authority described in Subtitle VII, Part A, Subpart III, Section 44701, ''General requirements.'' Under that section, Congress charges the FAA with promoting safe flight of civil aircraft in air commerce by prescribing regulations for practices, methods, and procedures the Administrator finds necessary for safety in air commerce. This regulation is within the scope of that authority because it addresses an unsafe condition that is likely to exist or develop on products identified in this rulemaking action.

Regulatory Findings

The FAA has determined that this proposed AD would not have federalism implications under Executive Order 13132. This proposed AD would not have a substantial direct effect on the States, on the relationship between the national Government and the States, or on the distribution of power and responsibilities among the various levels of government.

For the reasons discussed above, I certify that the proposed regulation:

(1) Is not a ''significant regulatory action'' under Executive Order 12866,

(2) Will not affect intrastate aviation in Alaska, and

(3) Will not have a significant economic impact, positive or negative, on a substantial number of small entities under the criteria of the Regulatory Flexibility Act.

List of Subjects in 14 CFR Part 39

Air transportation, Aircraft, Aviation safety, Incorporation by reference, Safety.

The Proposed Amendment

Accordingly, under the authority delegated to me by the Administrator, the FAA proposes to amend 14 CFR part 39 as follows:

PART 39—AIRWORTHINESS DIRECTIVES

■ 1. The authority citation for part 39 continues to read as follows:

Authority: 49 U.S.C. 106(g), 40113, 44701.

§ 39.13 [Amended]

■ 2. The FAA amends § 39.13 by removing Airworthiness Directive AD 2018–15–04, Amendment 39–19336 (83 FR 43739, August 28, 2018), and adding the following new AD:

General Electric Company: Docket No. FAA–2020–0557; Project Identifier AD–2020–00541–E.

(a) Comments Due Date

The FAA must receive comments on this AD action by July 23, 2020.

(b) Affected ADs

This AD replaces AD 2018–15–04, Amendment 39–19336 (83 FR 43739, August 28, 2018).

(c) Applicability

This AD applies to General Electric Company (GE) CF6–80A, CF6–80A1, CF6–80A2, CF6–80A3, CF6–80C2A1, CF6–80C2A2, CF6–80C2A3, CF6–80C2A5, CF6–80C2A5F, CF6–80C2A8, CF6–80C2B1, CF6–80C2B1F, CF6–80C2B2, CF6–80C2B2F, CF6–80C2B4, CF6–80C2B4F, CF6–80C2B5F, CF6–80C2B6, CF6–80C2B6F, CF6–80C2B6FA, CF6–80C2B7F, CF6–80C2D1F, CF6–80C2L1F, and CF6–80C2K1F model turbofan engines with high-pressure turbine (HPT) disks with serial numbers listed in Tables 1 and 2 of Appendix A in GE CF6–80C2 Service Bulletin (SB) 72–1562 R04, dated May 29, 2019; and Table 1 of Appendix A in GE CF6–80A SB 72–0869 R02, dated May 29, 2019.

(d) Subject

Joint Aircraft System Component (JASC) Code 7250, Turbine Section.

(e) Unsafe Condition

This AD was prompted by an uncontained failure of an HPT stage 2 disk. The FAA is issuing this AD to prevent failure of the HPT stage 1 disk (CF6–80C2 engines) and the HPT stage 2 disk (CF6–80C2 and CF6–80A engines). The unsafe condition, if not addressed, could result in an uncontained HPT disk release, damage to the engine, and damage to the airplane.

(f) Compliance

Comply with this AD within the compliance times specified, unless already done.

(g) Required Actions

(1) After the effective date of this AD, perform an ultrasonic inspection for cracks in HPT stage 1 and 2 disks on the CF6–80C2 turbofan engine at each piece-part exposure using the Accomplishment Instructions, paragraph 3.A.(2), in GE CF6–80C2 SB 72–1562 R04, dated May 29, 2019.

(2) After the effective date of this AD, perform an ultrasonic inspection for cracks in HPT stage 2 disks on the CF6–80A turbofan engine at each piece-part exposure using the Accomplishment Instructions, paragraph 3.A.(2), in GE CF6–80A SB 72–0869 R02, dated May 29, 2019.

(3) If any disk fails the inspection required by paragraphs (g)(1) and (2) of this AD, replace the disk before further flight.

(h) Non-Required Actions

The reporting requirements specified in the Accomplishment Instructions, paragraphs 3.A.(2)(c) and 3.A.(2)(f), of CF6–80C2 SB 72–1562 R04, dated May 29, 2019, are not required by this AD.

(i) Definition

For the purpose of this AD, ''piece-part exposure'' of the HPT stage 1 or stage 2 disk is separation of that HPT disk from its mating rotor parts within the HPT rotor module (thermal shield and HPT stage 1 and stage 2 disk, respectively).

(j) Alternative Methods of Compliance (AMOCs)

(1) The Manager, ECO Branch, FAA, has the authority to approve AMOCs for this AD, if requested using the procedures found in 14 CFR 39.19. In accordance with 14 CFR 39.19, send your request to your principal inspector or local Flight Standards District Office, as appropriate. If sending information directly to the manager of the certification office, send it to the attention of the person identified in paragraph (k)(1) of this AD. You may email your request to: *ANE-AD-AMOC@faa.gov.*

(2) Before using any approved AMOC, notify your appropriate principal inspector, or lacking a principal inspector, the manager of the local flight standards district office/certificate holding district office.

(k) Related Information

(1) For more information about this AD, contact Scott Stevenson, Aerospace Engineer, ECO Branch, FAA, 1200 District Avenue, Burlington, MA 01803; phone: (781) 238–7132; fax: (781) 238–7199; email: *Scott.M.Stevenson@faa.gov.*

(2) For service information identified in this AD, contact General Electric Company, 1 Neumann Way, Cincinnati, OH 45215, United States; phone: (513) 552–3272; email: *aviation.fleetsupport@ae.ge.com;* website: *www.ge.com.* You may view this referenced service information at the FAA, Airworthiness Products Section, Operational Safety Branch, 1200 District Avenue, Burlington, MA 01803. For information on the availability of this material at the FAA, call 781–238–7759.

Issued on June 1, 2020.

Lance T. Gant,

Director, Compliance & Airworthiness Division, Aircraft Certification Service.

[FR Doc. 2020–12157 Filed 6–5–20; 8:45 am]

BILLING CODE 4910–13–P

DEPARTMENT OF TRANSPORTATION

Federal Aviation Administration

14 CFR Part 71

[Docket No. FAA–2020–0551; Airspace Docket No. 20–ASW–6]

RIN 2120–AA66

Proposed Revocation, Establishment, and Amendment of Class E Airspace; Multiple Texas Towns

AGENCY: Federal Aviation Administration (FAA), DOT.

ACTION: Notice of proposed rulemaking (NPRM).

SUMMARY: This action proposes to revoke the Class E airspace extending upward from 700 feet above the surface at Ambassador Field, Big Sandy, TX; and establish and amend Class E airspace extending upward from 700 feet above the surface at several Texas airports. The FAA is proposing this action as the result of airspace reviews caused by the decommissioning of the Quitman VHF omnidirectional range (VOR) navigation aid, which provided navigation information for the instrument procedures these airports, as part of the VOR Minimum Operational Network (MON) Program. The names and geographic coordinates of several airports would also be updated to coincide with the FAA's aeronautical database.

DATES: Comments must be received on or before July 23, 2020.

ADDRESSES: Send comments on this proposal to the U.S. Department of Transportation, Docket Operations, West Building Ground Floor, Room W12–140, 1200 New Jersey Avenue SE, Washington, DC 20590; telephone (202) 366–9826, or (800) 647–5527. You must identify FAA Docket No. FAA–2020–0551/Airspace Docket No. 20–ASW–6, at the beginning of your comments. You may also submit comments through the internet at *https://www.regulations.gov.* You may review the public docket containing the proposal, any comments received, and any final disposition in person in the Dockets Office between 9:00 a.m. and 5:00 p.m., Monday through Friday, except federal holidays.

FAA Order 7400.11D, Airspace Designations and Reporting Points, and subsequent amendments can be viewed online at *https://www.faa.gov/air_traffic/publications/.* For further information, you can contact the Airspace Policy Group, Federal Aviation Administration, 800 Independence Avenue SW, Washington, DC 20591; telephone: (202) 267–8783. The Order is

also available for inspection at the National Archives and Records Administration (NARA). For information on the availability of FAA Order 7400.11D at NARA, email *fedreg.legal@nara.gov* or go to *https://www.archives.gov/federal-register/cfr/ibr-locations.html.*

FOR FURTHER INFORMATION CONTACT: Jeffrey Claypool, Federal Aviation Administration, Operations Support Group, Central Service Center, 10101 Hillwood Parkway, Fort Worth, TX 76177; telephone (817) 222–5711.

SUPPLEMENTARY INFORMATION:

Authority for This Rulemaking

The FAA's authority to issue rules regarding aviation safety is found in Title 49 of the United States Code. Subtitle I, Section 106 describes the authority of the FAA Administrator. Subtitle VII, Aviation Programs, describes in more detail the scope of the agency's authority. This rulemaking is promulgated under the authority described in Subtitle VII, Part A, Subpart I, Section 40103. Under that section, the FAA is charged with prescribing regulations to assign the use of airspace necessary to ensure the safety of aircraft and the efficient use of airspace. This regulation is within the scope of that authority as it would revoke the Class E airspace extending upward from 700 feet above the surface at Ambassador Field, Big Sandy, TX; establish Class E airspace extending upward from 700 feet above the surface at Fox Stephens Field-Gilmer Municipal Airport, Gilmer, TX; Gladewater Municipal Airport, Gladewater, TX; and Winnsboro Municipal Airport, Winnsboro, TX; and amend the Class E airspace upward from 700 above the surface at Wood County Airport-Collins Field, Mineola/Quitman, TX, contained within the Mineola, TX, airspace legal description, and at Mount Pleasant Regional Airport, Mount Pleasant, TX, to support instrument flight rule operations at these airports.

Comments Invited

Interested parties are invited to participate in this proposed rulemaking by submitting such written data, views, or arguments, as they may desire. Comments that provide the factual basis supporting the views and suggestions presented are particularly helpful in developing reasoned regulatory decisions on the proposal. Comments are specifically invited on the overall regulatory, aeronautical, economic, environmental, and energy-related aspects of the proposal. Communications should identify both docket numbers and be submitted in triplicate to the address listed above. Commenters wishing the FAA to acknowledge receipt of their comments on this notice must submit with those comments a self-addressed, stamped postcard on which the following statement is made: ''Comments to Docket No. FAA–2020–0551/Airspace Docket No. 20–ASW–6.'' The postcard will be date/time stamped and returned to the commenter.

All communications received before the specified closing date for comments will be considered before taking action on the proposed rule. The proposal contained in this notice may be changed in light of the comments received. A report summarizing each substantive public contact with FAA personnel concerned with this rulemaking will be filed in the docket.

Availability of NPRMs

An electronic copy of this document may be downloaded through the internet at *https://www.regulations.gov.* Recently published rulemaking documents can also be accessed through the FAA's web page at *https://www.faa.gov/air_traffic/publications/airspace_amendments/.*

You may review the public docket containing the proposal, any comments received, and any final disposition in person in the Dockets Office (see the **ADDRESSES** section for the address and phone number) between 9:00 a.m. and 5:00 p.m., Monday through Friday, except federal holidays. An informal docket may also be examined during normal business hours at the Federal Aviation Administration, Air Traffic Organization, Central Service Center, Operations Support Group, 10101 Hillwood Parkway, Fort Worth, TX 76177.

Availability and Summary of Documents for Incorporation by Reference

This document proposes to amend FAA Order 7400.11D, Airspace Designations and Reporting Points, dated August 8, 2019, and effective September 15, 2019. FAA Order 7400.11D is publicly available as listed in the **ADDRESSES** section of this document. FAA Order 7400.11D lists Class A, B, C, D, and E airspace areas, air traffic service routes, and reporting points.

The Proposal

The FAA is proposing an amendment to Title 14 Code of Federal Regulations (14 CFR) part 71 by:

Removing the Class E airspace extending upward from 700 feet above the surface at Ambassador Field, Big Sandy, TX, as the instrument procedures at this airfield have been cancelled so the airspace is no longer required;

Establishing Class E airspace extending upward from 700 feet above the surface within a 6.4-mile radius of Fox Stephens Field-Gilmer Municipal Airport, Gilmer, TX. (This airspace was previously contained within the Big Sandy, TX, airspace legal description.)

Establishing Class E airspace extending upward from 700 feet above the surface within a 6.4-mile radius of Gladewater Municipal Airport, Gladewater, TX. (This airspace was previously contained within the Big Sandy, TX, airspace legal description.)

Amending the Class E airspace extending upward from 700 feet above the surface to within a 6.4-mile (increased from a 6.3-mile) radius of Wood County Airport-Collins Field, Mineola/Quitman, TX, contained within the Mineola, TX, airspace legal description; adding an extension 3.8 miles east and 5.7 miles west of the 182° bearing from Wood County Airport-Collins Field extending from the 6.4-mile radius to 21.3 miles south of Wood County Airport-Collins Field; removing the city associated with the Mineola-Wisener Airport, Mineola, TX, and Wood County Airport-Collins Field to comply with changes to FAA Order 7400.2M, Procedures for Handling Airspace Matters; and updating the name and geographic coordinates of the Wood County Airport-Collins Field (previously Mineola-Quitman Airport) to coincide with the FAA's aeronautical database.

Amending the Class E airspace extending upward from 700 feet above the surface to within a 6.6-mile (increased from a 6.4-mile) radius of Mount Pleasant Regional Airport, Mount Pleasant, TX; removing the Quitman VORTAC and Mount Pleasant RBN and the associated extensions from the airspace legal description, as they are no longer required; and removing Winnsboro Municipal Airport, Winnsboro, TX, from the Mount Pleasant, TX, airspace legal description as the airspace no longer adjoins the Mount Pleasant Regional Airport airspace; and updating the name and geographic coordinates of the Mount Pleasant Regional Airport (previously Mount Pleasant Municipal Airport) to coincide with the FAA's aeronautical database.

And establishing Class E airspace extending upward from 700 feet above the surface within a 6.3-mile radius of Winnsboro Municipal Airport, Winnsboro, TX. (This airspace was

previously contained within the Mount Pleasant, TX, airspace legal description but is being separated as the Winnsboro Municipal Airport airspace and Mount Pleasant Regional airspace no longer adjoin.)

This action is the result of airspace reviews caused by the decommissioning of the Quitman VOR, which provided navigation information for the instrument procedures these airports, as part of the VOR MON Program.

Class E airspace designations are published in paragraph 6005 of FAA Order 7400.11D, dated August 8, 2019, and effective September 15, 2019, which is incorporated by reference in 14 CFR 71.1. The Class E airspace designations listed in this document will be published subsequently in the Order.

FAA Order 7400.11, Airspace Designations and Reporting Points, is published yearly and effective on September 15.

Regulatory Notices and Analyses

The FAA has determined that this regulation only involves an established body of technical regulations for which frequent and routine amendments are necessary to keep them operationally current, is non-controversial and unlikely to result in adverse or negative comments. It, therefore: (1) Is not a ''significant regulatory action'' under Executive Order 12866; (2) is not a ''significant rule'' under DOT Regulatory Policies and Procedures (44 FR 11034; February 26, 1979); and (3) does not warrant preparation of a regulatory evaluation as the anticipated impact is so minimal. Since this is a routine matter that will only affect air traffic procedures and air navigation, it is certified that this rule, when promulgated, would not have a significant economic impact on a substantial number of small entities under the criteria of the Regulatory Flexibility Act.

Environmental Review

This proposal will be subject to an environmental analysis in accordance with FAA Order 1050.1F, ''Environmental Impacts: Policies and Procedures'' prior to any FAA final regulatory action.

List of Subjects in 14 CFR Part 71

Airspace, Incorporation by reference, Navigation (air).

The Proposed Amendment

Accordingly, pursuant to the authority delegated to me, the Federal Aviation Administration proposes to amend 14 CFR part 71 as follows:

PART 71—DESIGNATION OF CLASS A, B, C, D, AND E AIRSPACE AREAS; AIR TRAFFIC SERVICE ROUTES; AND REPORTING POINTS

■ 1. The authority citation for 14 CFR part 71 continues to read as follows:

Authority: 49 U.S.C. 106(f), 106(g); 40103, 40113, 40120; E.O. 10854, 24 FR 9565, 3 CFR, 1959–1963 Comp., p. 389.

§ 71.1 [Amended]

■ 2. The incorporation by reference in 14 CFR 71.1 of FAA Order 7400.11D, Airspace Designations and Reporting Points, dated August 8, 2019, and effective September 15, 2019, is amended as follows:

Paragraph 6005 Class E Airspace Areas Extending Upward From 700 Feet or More Above the Surface of the Earth.

* * * * *

ASW TX E5 Big Sandy, TX [Removed]

* * * * *

ASW TX E5 Gilmer, TX [Establish]

Fox Stephens Field-Gilmer Municipal Airport, TX
(Lat. 32°41′53″ N, long. 94°56′56″ W)

That airspace extending upward from 700 feet above the surface within a 6.4-mile radius of Fox Stephens Field-Gilmer Municipal Airport.

* * * * *

ASW TX E5 Gladewater, TX [Establish]

Gladewater Municipal Airport, TX
(Lat. 32°31′44″ N, long. 94°58′19″ W)

That airspace extending upward from 700 feet above the surface within a 6.4-mile radius of Gladewater Municipal Airport.

* * * * *

ASW TX E5 Mineola, TX [Amended]

Mineola-Wisener Airport, TX
(Lat. 32°40′36″ N, long. 95°30′39″ W)

Wood County Airport-Collins Field, TX
(Lat. 32°44′32″ N, long. 95°29′47″ W)

That airspace extending upward from 700 feet above the surface within a 6.3-mile radius of Mineola-Wisener Airport, and within a 6.4-mile radius of Wood County Airport-Collins Field, and within 3.8 miles east and 5.7 miles west of the 182° bearing from the Wood County Airport-Collins Field extending from the 6.4-mile radius of Wood County Airport-Collins Field to 21.3 miles south of Wood County Airport-Collins Field.

* * * * *

ASW TX E5 Mount Pleasant, TX [Amended]

Mount Pleasant Regional Airport, TX
(Lat. 33°06′49″ N, long. 94°57′42″ W)

That airspace extending upward from 700 feet above the surface within a 6.6-mile radius of Mount Pleasant Regional Airport.

* * * * *

ASW TX E5 Winnsboro, TX [Establish]

Winnsboro Municipal Airport, TX
(Lat. 32°56′20″ N, long. 95°16′44″ W)

That airspace extending upward from 700 feet above the surface within a 6.3-mile radius of Winnsboro Municipal Airport.

Issued in Fort Worth, Texas, on June 1, 2020.

Steven T. Phillips,

Acting Manager, Operations Support Group, ATO Central Service Center.

[FR Doc. 2020–12102 Filed 6–5–20; 8:45 am]

BILLING CODE 4910–13–P

DEPARTMENT OF HOMELAND SECURITY

Coast Guard

33 CFR Part 165

[Docket Number USCG–2020–0251]

RIN 1625–AA00

Safety Zone for Fireworks Display; Upper Potomac River, Washington, DC

AGENCY: Coast Guard, DHS.

ACTION: Notice of proposed rulemaking.

SUMMARY: The Coast Guard is proposing to establish a temporary safety zone for certain waters of the Upper Potomac River. This action is necessary to provide for the safety of life on these navigable waters near the National Mall and Memorial Parks at Washington, DC, on July 4, 2020, (with alternate date of July 5, 2020) during a fireworks display to commemorate the July 4th holiday. This proposed rulemaking would prohibit persons and vessels from being in the safety zone unless authorized by the Captain of the Port Maryland-National Capital Region or a designated representative. We invite your comments on this proposed rulemaking.

DATES: Comments and related material must be received by the Coast Guard on or before June 18, 2020.

ADDRESSES: You may submit comments identified by docket number USCG–2020–0251 using the Federal eRulemaking Portal at *https://www.regulations.gov.* See the ''Public Participation and Request for Comments'' portion of the **SUPPLEMENTARY INFORMATION** section for further instructions on submitting comments.

FOR FURTHER INFORMATION CONTACT: If you have questions about this proposed rulemaking, call or email Mr. Ron Houck, Sector Maryland-National Capital Region Waterways Management Division, U.S. Coast Guard; telephone 410–576–2674, email *Ronald.L.Houck@uscg.mil.*

SUPPLEMENTARY INFORMATION:

I. Table of Abbreviations

CFR Code of Federal Regulations
COTP Captain of the Port
DHS Department of Homeland Security
FR Federal Register
NPRM Notice of proposed rulemaking
§ Section
U.S.C. United States Code

II. Background, Purpose, and Legal Basis

On May 4, 2020, the National Park Service notified the Coast Guard that, on behalf of the United States, it will be conducting a fireworks display on July 4, 2020, in Washington, DC, with a start time between 9:09 p.m. and 9:20 p.m. On May 27, 2020, the event sponsor notified the Coast Guard that the fireworks launch site was changed. The 20-minute public fireworks display will be launched from multiple sites along Ohio Drive SW, located adjacent to the Upper Potomac River in Washington, DC. Multiple fireworks fallout areas of different sizes span an area adjacent to the southern three-quarters of West Potomac Park. A portion of the fireworks fallout area includes certain waters of the Tidal Basin. In the event of inclement weather, the fireworks display will be scheduled for July 5, 2020. Hazards from the fireworks display includes accidental discharge of fireworks, dangerous projectiles, and falling hot embers or other debris. The COTP Maryland-National Capital Region has determined that potential hazards associated with the fireworks to be used in this display would be a safety concern for anyone near these fireworks discharge sites.

The Coast Guard is requesting that interested parties provide comments within a shortened comment period of 10 days instead of the more typical 30 days for this notice of proposed rulemaking. The Coast Guard believes a shortened comment period is necessary and reasonable to ensure the Coast Guard has time to review and respond to any significant comments submitted by the public in response to this NPRM and has a final rule in effect in time for the scheduled event.

The Coast Guard is proposing this rulemaking under authority in 46 U.S.C. 70034 (previously 33 U.S.C. 1231).

III. Discussion of Proposed Rule

The COTP proposes to establish a temporary safety zone in the Upper Potomac River from 8 p.m. on July 4, 2020, to 11 p.m. on July 5, 2020. The safety zone would cover all navigable waters of the Upper Potomac River, (i) encompassed by a line connecting the following points, beginning at the Washington, DC shoreline at latitude 38°53′05.7″ N, longitude 077°02′54.7″ W, thence southwest to latitude 38°52′58.4″ N, longitude 077°03′04.0″ W, thence southeast to the northern extent of the 14th Street Bridge Complex (I–395/US–1), at mile 96, at latitude 38°52’34.9’’ N, longitude 077°02′30.9″ W, thence northeast to the Washington, DC shoreline at latitude 38°52′43.9″ N, longitude 077°02′22.1″ W, thence northwest across the entrance to the Tidal Basin and along the shoreline to the point of origin; and (ii) within the Tidal Basin, from shoreline to shoreline, bounded on the east by a line drawn from the northern shoreline at latitude 38°53′12.6″ N, longitude 077°02′27.1″ W, thence southeast to the Thomas Jefferson Memorial shoreline, at latitude 38°52′55.2″ N, longitude 077°02′15.2″ W, located at Washington, DC. The area of the safety zone on the Upper Potomac River is approximately 1,200 yards in length and 750 yards in width. The duration of the zone is intended to ensure the safety of vessels on these navigable waters before, during, and after the scheduled 9:09 p.m. to 9:40 p.m. fireworks display. No vessel or person would be permitted to enter the safety zone without obtaining permission from the COTP or a designated representative. The regulatory text we are proposing appears at the end of this document.

IV. Regulatory Analyses

We developed this proposed rule after considering numerous statutes and Executive orders related to rulemaking. Below we summarize our analyses based on a number of these statutes and Executive orders, and we discuss First Amendment rights of protestors.

A. Regulatory Planning and Review

Executive Orders 12866 and 13563 direct agencies to assess the costs and benefits of available regulatory alternatives and, if regulation is necessary, to select regulatory approaches that maximize net benefits. Executive Order 13771 directs agencies to control regulatory costs through a budgeting process. This NPRM has not been designated a ‘‘significant regulatory action,’’ under Executive Order 12866. Accordingly, the NPRM has not been reviewed by the Office of Management and Budget (OMB), and pursuant to OMB guidance it is exempt from the requirements of Executive Order 13771.

This regulatory action determination is based on location, duration, and time-of-day of the safety zone. Vessel traffic would be able to safely transit around this safety zone which would impact a small designated area of the Upper Potomac River for 3 hours during the evening when vessel traffic is normally low. Moreover, the Coast Guard would issue a Broadcast Notice to Mariners via VHF–FM marine channel 16 about the zone.

B. Impact on Small Entities

The Regulatory Flexibility Act of 1980, 5 U.S.C. 601–612, as amended, requires Federal agencies to consider the potential impact of regulations on small entities during rulemaking. The term ‘‘small entities’’ comprises small businesses, not-for-profit organizations that are independently owned and operated and are not dominant in their fields, and governmental jurisdictions with populations of less than 50,000. The Coast Guard certifies under 5 U.S.C. 605(b) that this proposed rule would not have a significant economic impact on a substantial number of small entities.

While some owners or operators of vessels intending to transit the safety zone may be small entities, for the reasons stated in section IV.A above, this proposed rule would not have a significant economic impact on any vessel owner or operator.

If you think that your business, organization, or governmental jurisdiction qualifies as a small entity and that this rule would have a significant economic impact on it, please submit a comment (see **ADDRESSES**) explaining why you think it qualifies and how and to what degree this rule would economically affect it.

Under section 213(a) of the Small Business Regulatory Enforcement Fairness Act of 1996 (Pub. L. 104–121), we want to assist small entities in understanding this proposed rule. If the rule would affect your small business, organization, or governmental jurisdiction and you have questions concerning its provisions or options for compliance, please call or email the person listed in the **FOR FURTHER INFORMATION CONTACT** section. The Coast Guard will not retaliate against small entities that question or complain about this proposed rule or any policy or action of the Coast Guard.

C. Collection of Information

This proposed rule would not call for a new collection of information under the Paperwork Reduction Act of 1995 (44 U.S.C. 3501–3520).

D. Federalism and Indian Tribal Governments

A rule has implications for federalism under Executive Order 13132 (Federalism), if it has a substantial direct effect on the States, on the relationship between the National

Government and the States, or on the distribution of power and responsibilities among the various levels of government. We have analyzed this proposed rule under that Order and have determined that it is consistent with the fundamental federalism principles and preemption requirements described in Executive Order 13132.

Also, this proposed rule does not have tribal implications under Executive Order 13175 (Consultation and Coordination with Indian Tribal Governments) because it would not have a substantial direct effect on one or more Indian tribes, on the relationship between the Federal Government and Indian tribes, or on the distribution of power and responsibilities between the Federal Government and Indian tribes. If you believe this proposed rule has implications for federalism or Indian tribes, please call or email the person listed in the **FOR FURTHER INFORMATION CONTACT** section.

E. Unfunded Mandates Reform Act

The Unfunded Mandates Reform Act of 1995 (2 U.S.C. 1531–1538) requires Federal agencies to assess the effects of their discretionary regulatory actions. In particular, the Act addresses actions that may result in the expenditure by a State, local, or tribal government, in the aggregate, or by the private sector of $100,000,000 (adjusted for inflation) or more in any one year. Though this proposed rule would not result in such an expenditure, we do discuss the effects of this rule elsewhere in this preamble.

F. Environment

We have analyzed this proposed rule under Department of Homeland Security Directive 023–01, Rev. 1, associated implementing instructions, and Environmental Planning COMDTINST 5090.1 (series), which guide the Coast Guard in complying with the National Environmental Policy Act of 1969 (42 U.S.C. 4321–4370f), and have made a preliminary determination that this action is one of a category of actions that do not individually or cumulatively have a significant effect on the human environment. This proposed rule involves a safety zone lasting 3 hours that would prohibit entry within a portion of the Upper Potomac River, including the Tidal Basin. Normally such actions are categorically excluded from further review under paragraph L60(a) of Appendix A, Table 1 of DHS Instruction Manual 023–01–001–01, Rev. 1. A preliminary Record of Environmental Consideration supporting this determination is available in the docket. For instructions on locating the docket, see the **ADDRESSES** section of this preamble. We seek any comments or information that may lead to the discovery of a significant environmental impact from this proposed rule.

G. Protest Activities

The Coast Guard respects the First Amendment rights of protesters. Protesters are asked to call or email the person listed in the **FOR FURTHER INFORMATION CONTACT** section to coordinate protest activities so that your message can be received without jeopardizing the safety or security of people, places, or vessels.

V. Public Participation and Request for Comments

We view public participation as essential to effective rulemaking, and will consider all comments and material received during the comment period. Your comment can help shape the outcome of this rulemaking. If you submit a comment, please include the docket number for this rulemaking, indicate the specific section of this document to which each comment applies, and provide a reason for each suggestion or recommendation.

We encourage you to submit comments through the Federal eRulemaking Portal at *https://www.regulations.gov.* If your material cannot be submitted using *https://www.regulations.gov,* call or email the person in the **FOR FURTHER INFORMATION CONTACT** section of this document for alternate instructions.

We accept anonymous comments. All comments received will be posted without change to *https://www.regulations.gov* and will include any personal information you have provided. For more about privacy and submissions in response to this document, see DHS's eRulemaking System of Records notice (85 FR 14226, March 11, 2020).

Documents mentioned in this NPRM as being available in the docket, and all public comments, will be in our online docket at *https://www.regulations.gov* and can be viewed by following that website's instructions. Additionally, if you go to the online docket and sign up for email alerts, you will be notified when comments are posted or a final rule is published.

List of Subjects in 33 CFR Part 165

Harbors, Marine safety, Navigation (water), Reporting and recordkeeping requirements, Security measures, Waterways.

For the reasons discussed in the preamble, the Coast Guard is proposing to amend 33 CFR part 165 as follows:

PART 165—REGULATED NAVIGATION AREAS AND LIMITED ACCESS AREAS

■ 1. The authority citation for part 165 continues to read as follows:

Authority: 46 U.S.C. 70034, 70051; 33 CFR 1.05–1, 6.04–1, 6.04–6, and 160.5; Department of Homeland Security Delegation No. 0170.1.

■ 2. Add § 165.T05–0251 to read as follows:

§ 165.T05–0251 Safety Zone for Fireworks Display; Upper Potomac River, Washington, DC.

(a) *Location.* The following areas are a safety zone: (1) All navigable waters of the Upper Potomac River, encompassed by a line connecting the following points, beginning at the Washington, DC shoreline at latitude 38°53′05.7″ N, longitude 077°02′54.7″ W, thence southwest to latitude 38°52′58.4″ N, longitude 077°03′04.0″ W, thence southeast to the northern extent of the 14th Street Bridge Complex (I–395/US–1), at mile 96, at latitude 38°52′34.9″ N, longitude 077°02′30.9″ W, thence northeast to the Washington, DC shoreline at latitude 38°52′43.9″ N, longitude 077°02′22.1″ W, thence northwest across the entrance to the Tidal Basin and along the shoreline to the point of origin.

(2) All navigable waters of the Upper Potomac River, within the Tidal Basin, from shoreline to shoreline, bounded on the east by a line drawn from the northern shoreline at latitude 38°53′12.6″ N, longitude 077°02′27.1″ W, thence southeast to the Thomas Jefferson Memorial shoreline, at latitude 38°52′55.2″ N, longitude 077°02′15.2″ W, located at Washington, DC.

(3) These coordinates are based on datum NAD 1983.

(b) *Definitions.* As used in this section—

Captain of the Port (COTP) means the Commander, U.S. Coast Guard Sector Maryland-National Capital Region.

Designated representative means any Coast Guard commissioned, warrant, or petty officer who has been authorized by the Captain of the Port Maryland-National Capital Region to assist in enforcing the safety zone described in paragraph (a) of this section.

(c) *Regulations.* (1) Under the general safety zone regulations in subpart C of this part, you may not enter the safety zone described in paragraph (a) of this section unless authorized by the COTP or the COTP's designated representative.

(2) To seek permission to enter, contact the COTP or the COTP's

representative by telephone at 410–576–2693 or on Marine Band Radio VHF–FM channel 16 (156.8 MHz). The Coast Guard vessels enforcing this section can be contacted on Marine Band Radio VHF–FM channel 16 (156.8 MHz).

(3) Those in the safety zone must comply with all lawful orders or directions given to them by the COTP or the COTP's designated representative.

(d) *Enforcement officials.* The U.S. Coast Guard may be assisted in the patrol and enforcement of the safety zone by Federal, State, and local agencies.

(e) *Enforcement period.* This section will be enforced from 8 p.m. to 11 p.m. on July 4, 2020, or if necessary due to inclement weather on July 4, 2020, from 8 p.m. to 11 p.m. on July 5, 2020.

Dated: June 2, 2020.

Joseph B. Loring,

Captain, U.S. Coast Guard Captain of the Port Maryland-National Capital Region.

[FR Doc. 2020–12310 Filed 6–5–20; 8:45 am]

BILLING CODE 9110–04–P

ENVIRONMENTAL PROTECTION AGENCY

40 CFR Part 52

[EPA–R07–OAR–2020–0277; FRL–10010–45–Region 7]

Air Plan Approval; Missouri; Control of Sulfur Emissions From Stationary Boilers

AGENCY: Environmental Protection Agency (EPA).

ACTION: Proposed rule.

SUMMARY: The Environmental Protection Agency (EPA) is proposing approval of a State Implementation Plan (SIP) revision submitted by the State of Missouri on January 14, 2019. Missouri requests that the EPA revise a state regulation approved in the SIP related to sulfur emissions from industrial, commercial, or institutional boilers or process heaters in the St. Louis metropolitan area. The revisions to this rule include adding incorporations by reference to other state rules, including definitions specific to the rule, and wording changes that are administrative in nature and do not change the interpretation of the rule or the applicability of the rule. The EPA's proposed approval of this rule revision is in accordance with the requirements of the Clean Air Act (CAA).

DATES: Comments must be received on or before July 8, 2020.

ADDRESSES: You may send comments, identified by Docket ID No. EPA–R07–OAR–2020–0277 to *https://www.regulations.gov.* Follow the online instructions for submitting comments.

Instructions: All submissions received must include the Docket ID No. for this rulemaking. Comments received will be posted without change to *https://www.regulations.gov/,* including any personal information provided. For detailed instructions on sending comments and additional information on the rulemaking process, see the ''Written Comments'' heading of the **SUPPLEMENTARY INFORMATION** section of this document.

FOR FURTHER INFORMATION CONTACT: William Stone, Environmental Protection Agency, Region 7 Office, Air Quality Planning Branch, 11201 Renner Boulevard, Lenexa, Kansas 66219; telephone number (913) 551–7714; email address *stone.william@epa.gov.*

SUPPLEMENTARY INFORMATION: Throughout this document ''we,'' ''us,'' and ''our'' refer to the EPA.

Table of Contents

I. Written Comments
II. What is being addressed in this document?
III. Have the requirements for approval of a SIP revision been met?
IV. What action is the EPA taking?
V. Incorporation by Reference
VI. Statutory and Executive Order Reviews

I. Written Comments

Submit your comments, identified by Docket ID No. EPA–R07–OAR–2020–0277 at *https://www.regulations.gov.* Once submitted, comments cannot be edited or removed from *Regulations.gov*. The EPA may publish any comment received to its public docket. Do not submit electronically any information you consider to be Confidential Business Information (CBI) or other information whose disclosure is restricted by statute. Multimedia submissions (audio, video, etc.) must be accompanied by a written comment. The written comment is considered the official comment and should include discussion of all points you wish to make. The EPA will generally not consider comments or comment contents located outside of the primary submission (*i.e.,* on the web, cloud, or other file sharing system). For additional submission methods, the full EPA public comment policy, information about CBI or multimedia submissions, and general guidance on making effective comments, please visit *https://www.epa.gov/dockets/commenting-epa-dockets.*

II. What is being addressed in this document?

The EPA is proposing to approve the revisions to 10 Code of State Regulations (CSR) 10–5.570, *Control of Sulfur Emissions from Stationary Boilers* in the Missouri SIP. The revisions include wording changes that are administrative in nature, add definitions to the rule rather than referring to definitions in a separate rule, and updates and consolidates incorporation by reference to federal regulations. These revisions are described in detail in the technical support document (TSD) included in the docket for this action.

Missouri received sixteen comments from the EPA during the state public comment period. Missouri responded to all comments as noted in the state submission included in the docket for this action, and made revisions to the rule concerning incorporation by reference of Federal regulations or other testing methods, removal of definitions that were inconsistent with Federal definitions, and several non-substantive changes to the text of the regulation.

III. Have the requirements for approval of a SIP revision been met?

The State submission has met the public notice requirements for SIP submissions in accordance with 40 CFR 51.102. The submission also satisfied the completeness criteria of 40 CFR part 51, appendix V. The State provided public notice on this SIP revision from June 25, 2018, to July 26, 2018. In addition, the revision meets the substantive SIP requirements of the CAA, including section 110 and implementing regulations.

IV. What action is the EPA taking?

The EPA is proposing to approve Missouri's request to amend 10 CSR 10–5.570. We are processing this as a proposed action because we are soliciting comments on the substantive and administrative revisions detailed in this proposal and the TSD. The EPA is not soliciting comment on existing rule text that has been previously approved by EPA into the SIP. Final rulemaking will occur after consideration of any comments.

V. Incorporation by Reference

In this document, the EPA is proposing to include regulatory text in an EPA final rule that includes incorporation by reference. In accordance with requirements of 1 CFR 51.5, the EPA is proposing to incorporate by reference the Missouri Regulations described in the proposed amendments to 40 CFR part 52 set forth

below. The EPA has made, and will continue to make, these materials generally available through *www.regulations.gov* and at the EPA Region 7 Office (please contact the person identified in the **FOR FURTHER INFORMATION CONTACT** section of this preamble for more information).

VI. Statutory and Executive Order Reviews

Under the CAA, the Administrator is required to approve a SIP submission that complies with the provisions of the Act and applicable Federal regulations. 42 U.S.C. 7410(k); 40 CFR 52.02(a). Thus, in reviewing SIP submissions, EPA's role is to approve state choices, provided that they meet the criteria of the CAA. Accordingly, this action merely approves state law as meeting Federal requirements and does not impose additional requirements beyond those imposed by state law. For that reason, this action:

- Is not a significant regulatory action subject to review by the Office of Management and Budget under Executive Orders 12866 (58 FR 51735, October 4, 1993) and 13563 (76 FR 3821, January 21, 2011);
- Is not an Executive Order 13771 (82 FR 9339, February 2, 2017) regulatory action because SIP approvals are exempted under Executive Order 12866.
- Does not impose an information collection burden under the provisions of the Paperwork Reduction Act (44 U.S.C. 3501 *et seq.*);
- Is certified as not having a significant economic impact on a substantial number of small entities under the Regulatory Flexibility Act (5 U.S.C. 601 *et seq.*);
- Does not contain any unfunded mandate or significantly or uniquely affect small governments, as described in the Unfunded Mandates Reform Act of 1995 (Pub. L. 104–4);
- Does not have Federalism implications as specified in Executive Order 13132 (64 FR 43255, August 10, 1999);
- Is not an economically significant regulatory action based on health or safety risks subject to Executive Order 13045 (62 FR 19885, April 23, 1997);
- Is not a significant regulatory action subject to Executive Order 13211 (66 FR 28355, May 22, 2001);
- Is not subject to requirements of the National Technology Transfer and Advancement Act (NTTA) because this rulemaking does not involve technical standards; and
- Does not provide EPA with the discretionary authority to address, as appropriate, disproportionate human health or environmental effects, using practicable and legally permissible methods, under Executive Order 12898 (59 FR 7629, February 16, 1994).

The SIP is not approved to apply on any Indian reservation land or in any other area where EPA or an Indian tribe has demonstrated that a tribe has jurisdiction. In those areas of Indian country, the rule does not have tribal implications and will not impose substantial direct costs on tribal governments or preempt tribal law as specified by Executive Order 13175 (65 FR 67249, November 9, 2000).

List of Subjects in 40 CFR Part 52

Environmental protection, Air pollution control, Incorporation by reference, Reporting and recordkeeping requirements, Sulfur dioxide.

Dated: June 1, 2020.

James Gulliford,

Regional Administrator, Region 7.

For the reasons stated in the preamble, the EPA proposes to amend 40 CFR part 52 as set forth below:

PART 52—APPROVAL AND PROMULGATION OF IMPLEMENTATION PLANS

■ 1. The authority citation for part 52 continues to read as follows:

Authority: 42 U.S.C. 7401 *et seq.*

Subpart AA—Missouri

■ 2. In § 52.1320, the table in paragraph (c) is amended by revising the entry ''10–5.570'' to read as follows:

§ 52.1320 Identification of plan.

* * * * *

(c) * * *

EPA-APPROVED MISSOURI REGULATIONS

Missouri citation	Title	State effective date	EPA approval date	Explanation
Missouri Department of Natural Resources				
*	* *	*	* *	*
Chapter 5—Air Quality Standards and Air Pollution Control Regulations for the St. Louis Metropolitan Area				
*	10–5.570 * *	Control of Sulfur Emissions From Stationary Boilers	1/30/2019 * *	[Date of publication of the final rule in the **Federal Register**], [**Federal Register** citation of the final rule]
*	* *	*	* *	*

* * * * *

[FR Doc. 2020–12149 Filed 6–5–20; 8:45 am]

BILLING CODE 6560–50–P

ENVIRONMENTAL PROTECTION AGENCY

40 CFR Part 52

[EPA–R08–OAR–2020–0002; FRL–10009–92–Region 8]

Determination of Attainment by the Attainment Date for the Salt Lake City, Utah and Provo, Utah 2006 24-Hour $PM_{2.5}$ Nonattainment Areas

AGENCY: Environmental Protection Agency (EPA).

ACTION: Proposed rule.

SUMMARY: The Environmental Protection Agency (EPA) is proposing a determination of attainment by the attainment date for the 2006 24-hour fine particulate matter ($PM_{2.5}$) Salt Lake City, Utah (Salt Lake City) and Provo, Utah (Provo) Serious nonattainment areas (NAAs). The determination is based upon quality-assured, quality-controlled and certified ambient air monitoring data showing that the area has attained the 2006 24-hour $PM_{2.5}$ National Ambient Air Quality Standards (NAAQS) based on the 2017–2019 data available in the EPA's Air Quality System (AQS) database.

DATES: Written comments must be received on or before July 8, 2020.

ADDRESSES: Submit your comments, identified by Docket ID No. EPA–R08–OAR–2020–0002, to the Federal Rulemaking Portal: *https://www.regulations.gov.* Follow the online instructions for submitting comments. Once submitted, comments cannot be edited or removed from *www.regulations.gov.* The EPA may publish any comment received to its public docket. Do not submit electronically any information you consider to be Confidential Business Information (CBI) or other information whose disclosure is restricted by statute. Multimedia submissions (audio, video, etc.) must be accompanied by a written comment. The written comment is considered the official comment and should include discussion of all points you wish to make. The EPA will generally not consider comments or comment contents located outside of the primary submission (*i.e.,* on the web, cloud, or other file sharing system). For additional submission methods, the full EPA public comment policy, information about CBI or multimedia submissions, and general guidance on making effective comments, please visit *http://www2.epa.gov/dockets/commenting-epa-dockets.*

Docket: All documents in the docket are listed in the *www.regulations.gov* index. Although listed in the index, some information is not publicly available, *e.g.,* CBI or other information whose disclosure is restricted by statute. Certain other material, such as copyrighted material, will be publicly available only in hard copy. Publicly available docket materials are available electronically in *www.regulations.gov.* To reduce the risk of COVID–19 transmission, for this action we do not plan to offer hard copy review of the docket. Please email or call the person listed in the **FOR FURTHER INFORMATION CONTACT** section if you need to make alternative arrangements for access to the docket.

FOR FURTHER INFORMATION CONTACT: Crystal Ostigaard, Air and Radiation Division, EPA, Region 8, Mailcode 8ARD–QP, 1595 Wynkoop Street, Denver, Colorado 80202–1129, (303) 312–6602, *ostigaard.crystal@epa.gov.*

SUPPLEMENTARY INFORMATION: Throughout this document wherever ''we,'' ''us,'' or ''our'' is used, we mean the EPA.

I. Background

A. Designation and Classification of $PM_{2.5}$ Nonattainment Areas

On October 17, 2006 (71 FR 61144), the EPA revised the level of the 24-hour $PM_{2.5}$ NAAQS, lowering the primary and secondary standards from the 1997 standard of 65 micrograms per cubic meter (μg/m^3) to 35 μg/m^3. The EPA retained the form of the 1997 24-hour standard, that is, the 98th percentile of the annual 24-hour concentrations at each population-oriented monitor within an area, averaged over 3 years. *See* 71 FR 61164–5 (October 17, 2006).

On November 13, 2009 (74 FR 58688), the EPA designated a number of areas as nonattainment for the 24-hour $PM_{2.5}$ NAAQS of 35 μg/m^3, including the Salt Lake City and Provo NAAs. The EPA originally designated these areas under the general provisions of Clean Air Act (CAA) title I, part D, subpart 1 (''subpart 1''), under which attainment plans must provide for the attainment of a specific NAAQS (in this case, the 2006 $PM_{2.5}$ standards) as expeditiously as practicable, but no later than 5 years from the date the areas were designated nonattainment.

Subsequently, on January 4, 2013, the U.S. Court of Appeals for the District of Columbia Circuit held in *NRDC* v. *EPA* that the EPA should have implemented the 2006 24-hour $PM_{2.5}$ standard based on both the general NAA requirements in subpart 1 and the PM-specific requirements of CAA title I, part D, subpart 4 (''subpart 4''). In response to the Court's decision in *NRDC* v. *EPA*, on June 2, 2014 (79 FR 31566), the EPA finalized the ''Identification of Nonattainment Classification and Deadlines for Submission of State Implementation Plan (SIP) Provisions for the 1997 Fine Particulate ($PM_{2.5}$) NAAQS and 2006 $PM_{2.5}$ NAAQS.'' This rule classified the areas that were designated in 2009 as nonattainment to Moderate and set the attainment SIP submittal due date for those areas at December 31, 2014.

After the court's decision, on December 16, 2014, the Utah Division of Air Quality (UDAQ) withdrew all prior Salt Lake City and Provo $PM_{2.5}$ SIP submissions and submitted a new SIP to address both the general requirements of subpart 1 and the PM-specific requirements of subpart 4 for Moderate areas.

On August 24, 2016, the EPA finalized the Fine Particulate Matter National Ambient Air Quality Standards: State Implementation Plan Requirements (''$PM_{2.5}$ SIP Requirements Rule''), 81 FR 58010, which addressed the January 4, 2013 court ruling. The final $PM_{2.5}$ SIP Requirements Rule provides the EPA's interpretation of the requirements applicable to $PM_{2.5}$ NAAs and explains how air agencies can meet the statutory SIP requirements that apply under subparts 1 and 4 to areas designated nonattainment for any $PM_{2.5}$ NAAQS.

B. Reclassification of Salt Lake City and Provo Nonattainment Area

CAA section 188(b)(2) requires the EPA to determine whether any $PM_{2.5}$ NAA classified as ''Moderate'' attained the relevant $PM_{2.5}$ standard by the area's attainment date and requires EPA to make such determination within 6 months after that date.[1] The CAA requires that a Moderate area that has not attained the standard by the relevant attainment date be reclassified to ''Serious.''

On May 10, 2017 (82 FR 21711), the EPA finalized the determination that the Salt Lake City and Provo $PM_{2.5}$ NAAs failed to attain by the Moderate area attainment date of December 31, 2015 and were reclassified to Serious $PM_{2.5}$ NAAs. A Serious $PM_{2.5}$ NAA is required to attain the standard as expeditiously as practicable, but no later than by the

[1] An area's highest design value for the 24-hour $PM_{2.5}$ NAAQS is the highest of the 3-year average of annual 98th percentile 24-hour average $PM_{2.5}$ mass concentration values recorded at each eligible monitoring site (40 CFR part 50, appendix N, 1.0(c)(2)).

end of the tenth year after designation (December 31, 2019).

II. EPA Evaluation

A. Determination of Attainment by the Attainment Date

Under CAA section 188(c)(2), the EPA is required to determine within 6 months of the applicable attainment date whether a NAA attained the standard by that date. The 2006 primary and secondary 24-hour $PM_{2.5}$ NAAQS are met when the 24-hour $PM_{2.5}$ NAAQS design value at each eligible monitoring site is less than or equal to 35 μg/m³. *See* 40 CFR 50.13 and 40 CFR part 50, appendix N, section 4.2. For the 24-hour $PM_{2.5}$ standards, appendix N defines eligible monitoring sites as those that meet the technical requirements in 40 CFR 58.11 and 58.30. Three years of valid annual $PM_{2.5}$ 98th percentile mass concentrations are required to produce a valid 24-hour $PM_{2.5}$ NAAQS design value. A year meets data completeness requirements when quarterly data capture rates for all four quarters are at least 75%. Nonetheless, where the 75% data capture requirement is not met, the 24-hour $PM_{2.5}$ NAAQS design value shall still be considered valid if it passes the maximum quarterly value data substitution test.

In accordance with the EPA regulations at 40 CFR part 50, appendix N, a finding of attainment of the 2006 24-hour $PM_{2.5}$ NAAQS must be based upon complete, quality-assured data gathered at established state and local air monitoring stations (SLAMS) and national air monitoring stations (NAMS) in the NAA and entered in AQS. Data from air monitors operated by state/local/tribal agencies in compliance with the EPA monitoring requirements must be submitted to AQS. Monitoring agencies annually certify that these data are accurate to the best of their knowledge. Accordingly, the EPA relies primarily on data in AQS when determining the attainment status of areas.

A determination that an area attained by their attainment date is not equivalent to a redesignation, and the state must still meet the statutory requirements for redesignation in order to be redesignated to attainment.

B. Monitoring Network and Data Considerations

Determining whether an area has attained the NAAQS pursuant to CAA section 188(b)(2) is based on monitored air quality data. Thus, the validity of a determination of attainment depends in part on whether the monitoring network adequately measures ambient $PM_{2.5}$ levels in the NAA.

The UDAQ is the governmental agency with the authority and responsibility under the State's laws for collecting ambient air quality data for the Salt Lake City and Provo NAAs. UDAQ submits annual monitoring network plans (AMNPs) to the EPA. These plans document the establishment and maintenance of the air monitoring network, as required under 40 CFR part 58. With respect to $PM_{2.5}$ monitoring in the Salt Lake City and Provo NAAs, the EPA has found that UDAQ's AMNPs met the applicable requirements under 40 CFR part 58 for the relevant period, 2017–2019. Also, UDAQ annually certifies that the data they submit to AQS are quality assured.

The UDAQ operated $PM_{2.5}$ SLAMS monitors during the 2017–2019 period within the Salt Lake City and Provo $PM_{2.5}$ NAAs. The UDAQ operated five $PM_{2.5}$ SLAMS monitors throughout the 2017–2019 period within the Salt Lake City $PM_{2.5}$ NAA: Bountiful; Rose Park; Hawthorn; Herrimam #3; and Erda.[2] Additionally, UDAQ operated two $PM_{2.5}$ SLAMS monitors throughout the 2017–2019 period within the Provo, UT $PM_{2.5}$ NAA: Lindon and Spanish Fork.[3]

On October 27, 2017, March 20, 2019 and April 29, 2020, the EPA approved Utah's 2017, 2018 and 2019 AMNPs, respectively, and on April 10, 2018, February 1, 2019 and February 24, 2020, the UDAQ submitted letters to certify the 2017, 2018 and 2019 air quality data.

Based on our review, the $PM_{2.5}$ monitoring network for the Salt Lake City and Provo, NAAs meets the requirements stated above and is therefore adequate for use in determining whether the areas attained the 2006 24-hour $PM_{2.5}$ NAAQS.

C. Evaluation of Current Attainment

As discussed above, the EPA's evaluation on whether the Salt Lake City and Provo $PM_{2.5}$ NAAs have attained the 2006 24-hour $PM_{2.5}$ NAAQS are based on our review of the monitoring data, and takes into account the adequacy of the $PM_{2.5}$ monitoring network in the NAAs and the reliability of the data collected by the network as discussed in the previous section of this document.

The EPA reviewed the $PM_{2.5}$ ambient air monitoring data from the Salt Lake City and Provo, NAA monitors. These monitoring sites are consistent with the requirements contained in 40 CFR part 50, as recorded in the EPA AQS database for the NAAs. For purposes of determining attainment by the December 31, 2019 Serious attainment date, the EPA determined that UDAQ met the minimum monitoring site requirements under 40 CFR part 58 where the Provo NAA is required to have at least two monitors and the Salt Lake City NAA is required to have at least three monitors. The design values for the 2006 24-hour $PM_{2.5}$ NAAQS for the years 2017–2019 at the monitors in the Salt Lake City and Provo NAAs are less than the standard of 35 μg/m³. See Table 1 below for the annual 98th percentiles and 3-year design value for the 2017–2019 monitoring period. On the basis of this review, we are proposing to determine that the Salt Lake City and Provo NAAs attained the 2006 24-hour $PM_{2.5}$ NAAQS by the Serious area attainment date.

TABLE 1—SALT LAKE CITY AND PROVO NAAS 2017–2019 24-HOUR $PM_{2.5}$ AIR QUALITY DATA

[μg/m³]

NAA	Monitor site	Monitor ID	98th percentile values			2017–2019 design value
			2017	2018	2019	
Salt Lake City	Bountiful	49–011–0004	35.2	25.7	19.3	27
	Rose Park	49–035–3010	32.4	29.2	27.9	30
	Hawthorn	49–035–3006	35.7	26.2	27.3	30
	Herrimam #3	49–035–3013	28.2	29.0	18.8	25

[2] The Salt Lake City, UT NAA had two monitors shutdown due to the loss of each site and UDAQ is working to re-establish new sites. These monitors are Brigham City (49–003–0003), which shutdown in June 2019, and Ogden 2 (49–057–0002), which shutdown in May 2019. A new site for Ogden 2 was established in Weber County (Harrisville, 49–057–1003) in September 2019. UDAQ is still working with Box Elder County on new potential sites.

[3] The Provo, UT NAA had one monitor (North Provo, 49–049–0002) shutdown the end of 2018 due to safety issues at the site and UDAQ is working to re-establish a new site.

TABLE 1—SALT LAKE CITY AND PROVO NAAS 2017–2019 24-HOUR $PM_{2.5}$ AIR QUALITY DATA—Continued

[μg/m³]

NAA	Monitor site	Monitor ID	98th percentile values			2017–2019 design value
			2017	2018	2019	
Provo	Erda	49–045–0004	20.9	30.6	22.9	25
	Lindon	49–049–4001	27.6	49.6	17.5	32
	Spanish Fork	49–049–5010	27.6	49.6	17.5	32

III. Proposed Action

Pursuant to CAA section 188(c)(2), the EPA is proposing to determine, based on the most recent 3 years (2017–2019) of valid data,[4] that the Salt Lake City and Provo NAAs have attained the 2006 primary and secondary 24-hour $PM_{2.5}$ NAAQS by the December 31, 2019 attainment date.

IV. Statutory and Executive Order Reviews

This action proposes to make a determination of attainment based on air quality and thus would not impose additional requirements beyond those imposed by state law. For that reason, this action:

- Is not a ''significant regulatory action'' subject to review by the Office of Management and Budget under Executive Orders 12866 (58 FR 51735, October 4, 1993) and 13563 (76 FR 3821, January 21, 2011);
- Is not an Executive Order 13771 (82 FR 9339, February 2, 2017) regulatory action because SIP approvals are exempted under Executive Order 12866;
- Does not impose an information collection burden under the provisions of the Paperwork Reduction Act (44 U.S.C. 3501 *et seq.*);
- Is certified as not having a significant economic impact on a substantial number of small entities under the Regulatory Flexibility Act (5 U.S.C. 601 *et seq.*);
- Does not contain any unfunded mandate or significantly or uniquely affect small governments, as described in the Unfunded Mandates Reform Act of 1995 (Pub. L. 104–4);
- Does not have Federalism implications as specified in Executive Order 13132 (64 FR 43255, August 10, 1999);
- Is not an economically significant regulatory action based on health or safety risks subject to Executive Order 13045 (62 FR 19885, April 23, 1997);
- Is not a significant regulatory action subject to Executive Order 13211 (66 FR 28355, May 22, 2001);
- Is not subject to requirements of section 12(d) of the National Technology Transfer and Advancement Act of 1995 (15 U.S.C. 272 note) because application of those requirements would be inconsistent with the CAA; and
- Does not provide EPA with the discretionary authority to address, as appropriate, disproportionate human health or environmental effects, using practicable and legally permissible methods, under Executive Order 12898 (59 FR 7629, February 16, 1994).

In addition, the proposed rule does not apply on any Indian reservation land or in any other area where EPA or an Indian tribe has demonstrated that a tribe has jurisdiction. In those areas of Indian country, the proposed rule does not have tribal implications and will not impose substantial direct costs on tribal governments or preempt tribal law as specified by Executive Order 13175 (65 FR 67249, November 9, 2000).

List of Subjects in 40 CFR Part 52

Environmental protection, Air pollution control, Carbon monoxide, Greenhouse gases, Incorporation by reference, Intergovernmental relations, Lead, Nitrogen dioxide, Ozone, Particulate matter, Reporting and recordkeeping requirements, Sulfur oxides, Volatile organic compounds.

Authority: 42 U.S.C. 7401 *et seq.*

Dated: May 29, 2020.

Gregory Sopkin,

Regional Administrator, EPA Region 8.

[FR Doc. 2020–12074 Filed 6–5–20; 8:45 am]

BILLING CODE 6560–50–P

[4] Meeting the requirements of 40 CFR part 50, appendix N, and 40 CFR part 58.

ENVIRONMENTAL PROTECTION AGENCY

40 CFR Part 52

[EPA–R04–OAR–2020–0170; FRL–10010–10–Region 4]

Air Plan Approval; Alabama: Air Quality Control, VOC Definition

AGENCY: Environmental Protection Agency (EPA).

ACTION: Proposed rule.

SUMMARY: The Environmental Protection Agency (EPA) is proposing to approve a State Implementation Plan (SIP) revision submitted by the State of Alabama, through the Alabama Department of Environmental Management (ADEM) on February 27, 2020. The revision modifies the State's air quality regulations as incorporated into the SIP by changing the definition of ''volatile organic compounds'' (VOC) to be consistent with federal regulations. EPA is proposing to approve this SIP revision because the State has demonstrated that these changes are consistent with the Clean Air Act (CAA or Act).

DATES: Comments must be received on or before July 8, 2020.

ADDRESSES: Submit your comments, identified by Docket ID No. EPA–R04–OAR–2020–0170 at *www.regulations.gov.* Follow the online instructions for submitting comments. Once submitted, comments cannot be edited or removed from *Regulations.gov.* EPA may publish any comment received to its public docket. Do not submit electronically any information you consider to be Confidential Business Information (CBI) or other information whose disclosure is restricted by statute. Multimedia submissions (audio, video, etc.) must be accompanied by a written comment. The written comment is considered the official comment and should include discussion of all points you wish to make. EPA will generally not consider comments or comment contents located outside of the primary submission (*i.e.,* on the web, cloud, or other file sharing system). For additional submission methods, the full EPA public comment policy, information about CBI or multimedia submissions, and general guidance on making effective comments, please visit *www2.epa.gov/dockets/commenting-epa-dockets.*

FOR FURTHER INFORMATION CONTACT: Sarah LaRocca, Air Regulatory Management Section, Air Planning and Implementation Branch, Air and Radiation Division, U.S. Environmental Protection Agency, Region 4, 61 Forsyth Street SW, Atlanta, Georgia 30303–8960.

The telephone number is (404) 562–8994. Ms. LaRocca can also be reached via electronic mail at *larocca.sarah@epa.gov.*

SUPPLEMENTARY INFORMATION:

I. Background

Tropospheric ozone, commonly known as smog, occurs when VOC and nitrogen oxides (NO_X) react in the atmosphere in the presence of sunlight. Because of the harmful health effects of ozone, EPA and state governments implement rules to limit the amount of certain VOC and NO_X that can be released into the atmosphere. VOC have different levels of reactivity; they do not react at the same speed or do not form ozone to the same extent. Section 302(s) of the CAA specifies that EPA has the authority to define the meaning of ''VOC,'' and hence, what compounds shall be treated as VOC for regulatory purposes.

EPA determines whether a given carbon compound has ''negligible'' reactivity by comparing the compound's reactivity to the reactivity of ethane. It is EPA's policy that compounds of carbon with negligible reactivity be excluded from the regulatory definition of VOC. *See* 42 FR 35314 (July 8, 1977), 70 FR 54046 (September 13, 2005). EPA lists these compounds in its regulations at 40 CFR 51.100(s) and excludes them from the definition of VOC. The chemicals on this list are often called ''negligibly reactive.'' EPA may periodically revise the list of negligibly reactive compounds to add or delete compounds.

II. Analysis of State Submission

EPA is proposing to approve the change to the Alabama SIP submitted by the State of Alabama through a letter dated February 27, 2020 [1] that revises the definition of ''Volatile Organic Compounds (VOC)'' at subparagraph (gggg) of Rule 335–3–1–.02—''Definitions'' by adding *cis*-1,1,1,4,4,4—hexafluorobut-2-ene (HFO–1336mzz–Z) to the list of organic compounds having negligible photochemical reactivity.[2] Alabama submitted this SIP revision in response to EPA adding *cis*-1,1,1,4,4,4-hexafluorobut-2-ene to the exclusion list at 40 CFR 51.100(s). *See* 83 FR 61127 (January 28, 2019). EPA proposes to find that this change to the SIP will not interfere with attainment or maintenance of any national ambient air quality standard, reasonable further progress, or any other applicable requirement of the CAA, consistent with CAA section 110(l), because EPA has found this chemical to be negligibly reactive.

III. Incorporation by Reference

In this document, EPA is proposing to include in a final EPA rule regulatory text that includes incorporation by reference. In accordance with requirements of 1 CFR 51.5, EPA is proposing to incorporate by reference Alabama Rule 335–3–1–.02—''Definitions,'' Subparagraph (gggg)—''Volatile Organic Compounds (VOC),'' state-effective April 13, 2020, to revise this definition by adding *cis*-1,1,1,4,4,4—hexafluorobut-2-ene (HFO–1336mzz–Z) to the list of organic compounds having negligible photochemical activity. EPA has made, and will continue to make, these materials generally available through *www.regulations.gov* and at the EPA Region 4 office (please contact the person identified as the **FOR FURTHER INFORMATION CONTACT** section of this preamble for more information).

IV. Proposed Action

EPA is proposing to approve the State of Alabama's February 27, 2020 SIP submission that revises the definition of ''Volatile Organic Compounds (VOC)'' at Rule 335–3–1-.02(gggg) to be consistent with federal regulations and CAA requirements.

V. Statutory and Executive Order Reviews

Under the CAA, the Administrator is required to approve a SIP submission that complies with the provisions of the Act and applicable Federal regulations. *See* 42 U.S.C. 7410(k); 40 CFR 52.02(a). Thus, in reviewing SIP submissions, EPA's role is to approve state choices, provided that they meet the criteria of the CAA. This action merely proposes to approve state law as meeting Federal requirements and does not impose additional requirements beyond those imposed by state law. For that reason, this proposed action:

- Is not a significant regulatory action subject to review by the Office of Management and Budget under Executive Orders 12866 (58 FR 51735, October 4, 1993) and 13563 (76 FR 3821, January 21, 2011;
- Is not an Executive Order 13771 (82 FR 9339, February 2, 2017) regulatory action because SIP approvals are exempted under Executive Order 12866;
- Does not impose an information collection burden under the provisions of the Paperwork Reduction Act (44 U.S.C. 3501 *et seq.*);
- Is certified as not having a significant economic impact on a substantial number of small entities under the Regulatory Flexibility Act (5 U.S.C. 601 *et seq.);*
- Does not contain any unfunded mandate or significantly or uniquely affect small governments, as described in the Unfunded Mandates Reform Act of 1955 (Pub. L. 104–4);
- Does not have Federalism implications as specified in the Executive Order 13132 (64 FR 43255, August 10, 1999);
- Is not an economically significant regulatory action based on health or safety risks subject to Executive Order 13045 (62 FR 19885, April 23, 1997);
- Is not a significant regulatory action subject to Executive Order 13211 (66 FR 28355, May 22, 2001);
- Is not subject to requirements of Section 12(d) of the national Technology Transfer and Advancement Act of 1995 (15 U.S.C. 272 note) because application of those requirements would be inconsistent with the CAA; and
- Does not provide EPA with the discretionary authority to address, as appropriate, disproportionate human health or environmental effects, using practicable and legally permissible methods, under Executive Order 12898 (59 FR 7629, February 16, 1994).

The SIP is not approved to apply on any Indian reservation land or any other area where EPA or an Indian tribe has demonstrated that a tribe has jurisdiction. In those areas of Indian country, the rule does not have tribal implications as specified by Executive Order 13175 (65 FR 67249, November 9, 2000), nor will it impose substantial direct costs on tribal governments or preempt tribal law.

List of Subjects in 40 CFR Part 52

Environmental protection, Air pollution control, Incorporation by reference, Intergovernmental relations, Ozone, Reporting and recordkeeping requirements, Volatile organic compounds.

Authority: 42 U.S.C. 7401 *et seq.*

Dated: May 29, 2020.

Mary Walker,

Regional Administrator, Region 4.

[FR Doc. 2020–12140 Filed 6–5–20; 8:45 am]

BILLING CODE 6560–50–P

[1] EPA received Alabama's SIP revision on March 5, 2020.

[2] On February 27, 2020, Alabama submitted other SIP revisions which will be addressed in separate actions.

ENVIRONMENTAL PROTECTION AGENCY

40 CFR Part 52

[EPA–R04–OAR–2019–0619; FRL–10010–22–Region 4]

Air Plan Approval; TN; Removal of the Vehicle I/M Program, Hamilton County, TN

AGENCY: Environmental Protection Agency (EPA).

ACTION: Proposed rule.

SUMMARY: The Environmental Protection Agency (EPA) is proposing to approve a State Implementation Plan (SIP) revision submitted by the State of Tennessee, through the Tennessee Department of Environment and Conservation (TDEC), through a letter dated February 26, 2020. Specifically, EPA is proposing to approve the removal of Tennessee's inspection and maintenance (I/M) program requirements for Hamilton County from the federally approved SIP. EPA is proposing to approve the removal of the I/M program requirements for Hamilton County from the federally approved SIP because removing the requirements is consistent with the Clean Air Act (CAA or Act) and applicable regulations.

DATES: Comments must be received on or before July 8, 2020.

ADDRESSES: Submit your comments, identified by Docket ID No. EPA–R04–OAR–2019–0619 at *http://www.regulations.gov.* Follow the online instructions for submitting comments. Once submitted, comments cannot be edited or removed from *Regulations.gov*. EPA may publish any comment received to its public docket. Do not submit electronically any information you consider to be Confidential Business Information (CBI) or other information whose disclosure is restricted by statute. Multimedia submissions (audio, video, etc.) must be accompanied by a written comment. The written comment is considered the official comment and should include discussion of all points you wish to make. EPA will generally not consider comments or comment contents located outside of the primary submission (*i.e.,* on the web, cloud, or other file sharing system). For additional submission methods, the full EPA public comment policy, information about CBI or multimedia submissions, and general guidance on making effective comments, please visit *http://www.epa.gov/dockets/commenting-epa-dockets.*

FOR FURTHER INFORMATION CONTACT: Kelly Sheckler, Air Regulatory Management Section, Air Planning and Implementation Branch, Air and Radiation Division, U.S. Environmental Protection Agency, Region 4, 61 Forsyth Street SW, Atlanta, Georgia 30303–8960. The telephone number is (404) 562–9222. Ms. Sheckler can also be reached via electronic mail at *sheckler.kelly@epa.gov.*

SUPPLEMENTARY INFORMATION:

I. Background

On July 18, 1997 (62 FR 38856), EPA promulgated a revised 8-hour ozone standard of 0.08 parts per million (ppm). In December 2002, Hamilton and Meigs counties in Tennessee and Catoosa county in Georgia (also known as the Chattanooga Ozone Area) entered into EPA's Early Action Compact (EAC) program.[1] *See* 70 FR 50199 (August 26, 2005). As part of the EAC as a control strategy to meet the 1997 8-hour ozone national ambient air quality standard (NAAQS or standard), Tennessee added Hamilton County to the State's I/M rules at Chapter 29 of the Tennessee Air Pollution Control Regulations (TAPCR 1200–03–29) to require all light-duty motor vehicles registered in Hamilton County to be inspected annually for compliance with emissions performance and anti-tampering test criteria.[2] *See id.* The I/M program in Hamilton County began in April 2005. The Chattanooga Ozone Area met the EAC requirements by December 31, 2007, demonstrating attainment of the 1997 8-hour ozone NAAQS. As a result of meeting the EAC agreement, on April 2, 2008, EPA designated the Chattanooga Ozone Area as attainment for the 1997 8-hour ozone NAAQS. *See* 73 FR 17897. The ozone NAAQS was revised in 2008 to a value of 0.075 ppm and again in 2015 to 0.070 ppm. *See* 73 FR 16483 (March 27, 2008) and 80 FR 65292 (October 26, 2015). Hamilton County was designated as unclassifiable/attainment and attainment/unclassifiable for the 2008 and 2015 ozone NAAQS, respectively. *See* 40 CFR 81.343. Hamilton County is currently in attainment with all ozone NAAQS. *See id.*

On July 18, 1997, EPA set the 24-hour fine particulate matter ($PM_{2.5}$) NAAQS at 65 micrograms per cubic meter (μg/m^3) and the annual $PM_{2.5}$ NAAQS at 15 μg/m^3. *See* 62 FR 38652 (July 18, 1997). On January 5, 2005, EPA designated Hamilton County in Tennessee, Catoosa and Walker counties in Georgia, and a portion of Jackson County in Alabama (also known as the Chattanooga $PM_{2.5}$ Area) as nonattainment for the 1997 annual $PM_{2.5}$ NAAQS. *See* 70 FR 944 (January 5, 2005). On October 15, 2009, Tennessee submitted a $PM_{2.5}$ attainment SIP and identified the I/M program, which had already been implemented to comply with the ozone NAAQS, as a control measure for the on-road mobile sector. *See* 80 FR 56418 (September 18, 2015) and 80 FR 68253 (November 4, 2015). It was determined that no additional emission reductions were necessary for on-road mobile sources beyond the fully implemented (existing) I/M program because the Chattanooga $PM_{2.5}$ Area was modeled to attain the NAAQS with the current regulatory scheme in 2009. *See id.* On November 4, 2015, Hamilton County was redesignated to attainment for the 1997 annual $PM_{2.5}$ NAAQS. *See* 80 FR 68253. On August 24, 2016, EPA took final action to revoke the 1997 $PM_{2.5}$ NAAQS for areas designated attainment or in maintenance for the standard. *See* 81 FR 58010.

On May 15, 2018, a Tennessee law which states that ''no inspection and maintenance program shall be employed in this state on or after the effective date of this act'' was signed. *See* Tenn. Code Ann. § 68–201–119. The Tennessee law states that it ''shall take effect [120] calendar days following the date on which the [EPA] approves a revised state implementation plan. . . .'' *See* Motor Vehicles—Inspection and Inspectors—Air Pollution, 2018 Tennessee Laws Pub. Ch. 953 (H.B. 1782). Accordingly, Tennessee submitted the February 26, 2020, SIP revision requesting that EPA remove the requirements to implement an I/M program for Hamilton County. A description of the SIP revision and EPA's analysis is provided in Section II below.

II. What is EPA's analysis of Tennessee's submittal?

Through a letter dated February 26, 2020,[3] Tennessee requested that TAPCR 1200–03–29 be removed from the Tennessee SIP. In addition, Tennessee requested that EPA remove the requirement for Hamilton County to implement an I/M program as part of the EAC that was approved by EPA into the non-regulatory portion of the Tennessee SIP on August 26, 2005. *See* 70 FR

[1] In December 2002, several states submitted early action compact agreements pledging to meet the 1997 8-hour ozone standard earlier than required. The states had to meet certain criteria and milestones. The most significant milestone was that the EAC areas had to attain the 1997 8-hour ozone standard by December 31, 2007.

[2] The I/M program in Hamilton County was not required by the CAA because the Act only requires I/M programs in ozone nonattainment areas classified as moderate, serious, severe, or extreme.

[3] EPA received Tennessee's SIP revision on February 27, 2020.

50199. Tennessee also provided a noninterference demonstration to support the removal of the requirements for the I/M program in Hamilton County.

As discussed in Section I above, Hamilton County implemented the I/M program requirements as a control strategy in the EAC to meet the 1997 8-hour ozone NAAQS. Currently, Hamilton County is designated attainment, unclassifiable/attainment, or attainment/unclassifiable for all ozone and $PM_{2.5}$ NAAQS. *See* 40 CFR 81.343.

EPA is proposing to approve the removal of the I/M requirements for Hamilton County from the Tennessee SIP, including Chapter 29 of the Tennessee Air Pollution Control Regulations (TAPCR 1200–03–29).[4] EPA is also proposing to find that the removal of the I/M program requirements for Hamilton County is consistent with CAA section 110(l). Section 110(l) of the CAA requires that a revision to the SIP not interfere with any applicable requirements concerning attainment, reasonable further progress (as defined in section 171), or any other applicable requirements of the CAA. EPA evaluates section 110(l) non-interference demonstrations on a case-by-case basis considering the circumstances of each SIP revision. EPA interprets section 110(l) as applying to all NAAQS that are in effect. For I/M SIP revisions, the most relevant pollutants to consider are ozone precursors (*i.e.,* nitrogen oxides (NO_X) and volatile organic compounds (VOCs)).

As mentioned above, Tennessee's February 26, 2020, SIP revision included a non-interference demonstration to support the State's request to remove the SIP-approved I/M program requirements for Hamilton County. Tennessee's non-interference demonstration evaluates the impact that the removal of the I/M program for Hamilton County would have on the ability to attain and maintain any of the NAAQS. Based on the analysis below, EPA is proposing to find that removal of the I/M program requirements for Hamilton County meets the requirements of CAA section 110(l) because it would not interfere with attainment or maintenance of any NAAQS or any other requirement of the CAA.[5] [6] [7]

Non-Interference Analysis for the Ozone NAAQS

As discussed in Section I above, on July 18, 1997 (62 FR 38856), EPA promulgated a revised 8-hour ozone standard of 0.08 ppm. Subsequently, on March 12, 2008, EPA revised both the primary and secondary NAAQS for ozone to a level of 0.075 ppm to provide increased protection of public health and the environment. *See* 73 FR 16436 (March 27, 2008). The 2008 ozone NAAQS retain the same general form and averaging time as the 0.08 ppm NAAQS set in 1997 but are set at a more protective level. Under EPA's regulations at 40 CFR part 50, the 2008 8-hour ozone NAAQS are attained when the 3-year average of the annual fourth highest daily maximum 8-hour average ambient air quality ozone concentrations is less than or equal to 0.075 ppm. *See* 40 CFR 50.15. On October 26, 2015 (80 FR 65292), EPA published a final rule lowering the level of the 8-hour ozone NAAQS to 0.070 ppm or 70 parts per billion (ppb) and retaining the same form.

Hamilton County is currently designated as attainment, unclassifiable/attainment, or attainment/unclassifiable for all ozone NAAQS.[8] *See* 40 CFR 81.343. Ambient air quality monitoring for ozone is being conducted at two locations in the Chattanooga, TN–GA metropolitan statistical area (MSA).[9] In the SIP submittal, the State provides recent 8-hour ozone design values in ppb (see Table 1). The values in Table 1 below indicate attainment of the 2015 8-hour NAAQS of 70 ppb.

TABLE 1—HAMILTON COUNTY MONITOR DESIGN VALUES

Site name	Ozone design value, ppb				
	2013–2015	2014–2016	2015–2017	2016–2018	2017–2019
Eastside Utility	66	68	67	66	64
Soddy Daisy	64	65	65	64	64

Tennessee's noninterference analysis includes modeling to calculate ozone precursor emissions, as well as a sensitivity analysis to demonstrate the impact of emissions increases on monitored ozone values. Tennessee's non-interference demonstration utilized EPA's MOVES2014 emission modeling system to estimate ozone precursor

[4] EPA cannot propose to remove TAPCR 1200–03–29 from the SIP in its entirety at this time because this regulation also applies to Rutherford, Sumner, Williamson, and Wilson Counties. Therefore, EPA is proposing to remove Hamilton County from TAPCR 1200–03–29.

[5] The initial designations for the PM_{10} NAAQS were completed on March 15, 1991. *See* 56 FR 11101. The entire state of Tennessee was designated as attainment for PM_{10} and has been attainment for every PM_{10} standard thereafter. The pollution control systems for light-duty gasoline vehicles subject to the I/M program are not designed to reduce emissions of PM_{10}; therefore, removing the I/M program requirements will not have any impact on ambient concentrations of PM_{10}. EPA proposes to find that removal of the SIP-approved I/M program requirements for Hamilton County would not interfere with continued attainment or maintenance of the PM_{10} NAAQS.

[6] On June 22, 2010, EPA revised the 1-hour SO_2 NAAQS to 75 ppb which became effective on August 23, 2010. *See* 75 FR 35520. On January 9, 2018, EPA designated most of the state of Tennessee, including Hamilton County, as attainment/unclassifiable for the 2010 SO_2 NAAQS. *See* 83 FR 1098. EPA has designated Sullivan County, Tennessee nonattainment and Sumner County as unclassifiable for the 2010 1-hour SO_2 NAAQS. *See* 78 FR 47191 (August 5, 2013), and 81 FR 45039 (July 12, 2016). The pollution control systems for light-duty gasoline vehicles subject to the I/M program are not designed to reduce emissions for SO_2; therefore, removing the I/M program requirements will not have any impact on ambient concentrations of SO_2. EPA proposes to find that removal of the SIP-approved I/M program requirements for Hamilton County would not interfere with continued attainment or maintenance of the SO_2 NAAQS.

[7] On November 12, 2008, EPA promulgated a revised lead NAAQS of 0.15 μg/m^3. *See* 73 FR 66964. On November 22, 2011, EPA designated a majority of the State of Tennessee, including Hamilton County as unclassifiable/attainment for the 2008 lead NAAQS. The Bristol Area in Sullivan County was designated as nonattainment; and the Knox County Area was later designated as unclassifiable. *See* 76 FR 72907; *see also* 75 FR 71033 (November 22, 2011). Subsequently, the Bristol Area was redesignated to attainment. *See* 81 FR 44210 (July 7, 2016). Effective January 1, 1996, EPA banned the sale of leaded fuel for use in on-road vehicles. The pollution control systems for light-duty gasoline vehicles subject to the I/M program are not designed to reduce emissions for lead; therefore, removal of the I/M program requirements would not cause an increase in emissions of lead. EPA proposes to find that removal of the SIP-approved I/M program requirements for Hamilton County would not interfere with continued attainment or maintenance of the lead NAAQS.

[8] Visit *https://gispub.epa.gov/air/trendsreport/2019/#home* or *https://www.epa.gov/outdoor-air-quality-data* for air quality data including current status and trends for all NAAQS.

[9] The Chattanooga TN–GA MSA is comprised of Hamilton, Marion, and Sequatchie counties in Tennessee and Catoosa, Dade, and Walker counties in Georgia.

emissions for mobile sources, both on-road and non-road. Tennessee chose 2022 as the future year for the State's non-interference demonstration because it is the year that Hamilton County anticipates that it will cease implementation of the I/M program due to the CAA's SIP processing timeframe and the language of Tenn. Code Ann. § 68–201–119. The point source emissions for Hamilton County were obtained from the 2014 version 2 National Emissions Inventory (NEI) and grown to the year 2022 using the appropriate EPA growth factors or using engineering judgment based on potential growth in demand. For non-point sources, the inventory was developed using EPA established methodologies published by EPA,[10] as detailed in Appendix G of the February 26, 2020, SIP revision. Tennessee calculated projected emissions in the year 2022 by adding all four sectors (on-road, point, non-road, and non-point) together.

Table 2 shows the total projected emissions in 2022 with the I/M program in Hamilton County. Table 3 shows the total projected emissions in 2022 without the I/M program in Hamilton County.[11] By 2022, the emissions benefits resulting from Tennessee's I/M program for Hamilton County are predicted to be a 99.7 tons per year (tpy) reduction of NO_X and a 146.23 tpy reduction of VOCs. *See* Table 4. On a percentage basis, removal of the I/M program in Hamilton County is expected to result in a 1.1 percent increase in total NO_X emissions and a 1.5 percent increase in on-road VOCs.

TABLE 2—HAMILTON COUNTY AREA

[Total 2022 projected emissions of NO_X and VOC (in tpy) with the I/M program]

Sector	NO_X	VOC
On-road	4,613	2,127
Point	1,314	825
Non-road	2,220	935
Non-Point	1,220	5,744
Total	9,367	9,632

TABLE 3—HAMILTON COUNTY AREA

[Total 2022 projected emissions of NO_X and VOC (in tpy) without the I/M program]

Sector	NO_X	VOC
On-road	4,712	2,273
Point	1,314	825
Non-road	2,220	935
Non-Point	1,220	5,744
Total	9,467	9,778

TABLE 4—SUMMARY OF NO_X AND VOC EMISSIONS INCREASES ASSOCIATED WITH REMOVING THE HAMILTON COUNTY FROM THE I/M PROGRAM

	NO_X Emissions in 2022	VOC Emissions in 2022
Total On-Road Emissions for Hamilton County in Current I/M Program (tpy)	4,613	2,127
Total On-Road Emissions after Removing Hamilton County from I/M Program (tpy)	4,712	2,273
Total Emissions for Hamilton County in Current I/M Program (all sectors) (tpy)	9,367	9,632
Total Emissions after Removing Hamilton County from I/M Program (all sectors) (tpy)	9,467	9,778
Emissions Increases (tpy)	99.7	146.2
Emissions Increases (% of On-Road Emissions for Hamilton County)	2.2%	6.9%
Emissions Increases (% of Total Emissions for Hamilton County, all sectors)	1.1%	1.5%

To further quantify the potential impact of removal of the I/M program, Tennessee completed a photochemical modeling sensitivity analysis. As shown in Table 5, the sensitivity analysis indicates that the largest increase in ozone concentration would be at the Eastside Utility monitor at 0.209 ppb.

[10] *See* 2017 NEI Final Plan: Revised July 2018, available at *https://www.epa.gov/sites/production/files/2018-07/documents/2017_nei_plan_final_revised_jul2018.pdf.*

[11] Since the I/M program only impacts emissions in the on-road sector, the projected emissions in other sectors (point, non-road and non-point) are the same between the ''with the I/M program'' and the ''without the I/M program'' scenarios.

TABLE 5—RESULTS OF SENSITIVITY ANALYSIS, PREDICTED INCREASES OF OZONE CONCENTRATIONS AT MONITORS IN THE CHATTANOOGA OZONE AREA

Site name	2016–2018 ozone design value (ppb)	Predicted ozone increase due to combined NO_X and VOC increases
Eastside Utility	66	0.209
Soddy Daisy	64	0.148

EPA has evaluated the State's analysis and preliminarily agrees with its findings and conclusions. EPA therefore proposes to find that removal of the SIP-approved I/M program requirements for Hamilton County would not interfere with any applicable requirement concerning attainment or maintenance of the ozone NAAQS.

Non-Interference Analysis for the $PM_{2.5}$ NAAQS

On July 16, 1997, EPA established an annual $PM_{2.5}$ NAAQS of 15.0 μg/m³, based on a 3-year average of annual mean $PM_{2.5}$ concentrations, and a 24-hour $PM_{2.5}$ NAAQS of 65 μg/m³, based on a 3-year average of the 98th percentile of 24-hour concentrations. *See* 62 FR 38652 (July 18, 1997). On August 24, 2016, EPA took final action to revoke the 1997 $PM_{2.5}$ NAAQS for areas designated attainment or in maintenance. *See* 81 FR 58010.

On September 21, 2006, EPA retained the 1997 annual $PM_{2.5}$ NAAQS of 15.0 μg/m³ but revised the 24-hour $PM_{2.5}$ NAAQS to 35 μg/m³, based again on a 3-year average of the 98th percentile of 24-hour concentrations. *See* 71 FR 61144 (October 17, 2006). On December 14, 2012, EPA retained the 2006 24-hour $PM_{2.5}$ NAAQS of 35 μg/m³ but revised the annual primary $PM_{2.5}$ NAAQS to 12.0 μg/m³, based again on a 3-year average of annual mean $PM_{2.5}$ concentrations. *See* 78 FR 3086 (January 15, 2013).

As discussed in Section I above, EPA published designations for the 1997 annual $PM_{2.5}$ NAAQS on January 5, 2005 (70 FR 944), and April 14, 2005 (70 FR 19844). On January 5, 2005, EPA designated the Chattanooga $PM_{2.5}$ Area nonattainment for the 1997 annual $PM_{2.5}$ NAAQS. *See* 70 FR 944. On November 4, 2015, Hamilton County was redesignated to attainment for the 1997 annual $PM_{2.5}$ NAAQS, and EPA approved a maintenance plan and reasonably available control measure demonstration for the Chattanooga $PM_{2.5}$ Area. *See* 80 FR 68253. The Chattanooga $PM_{2.5}$ Area has continued to attain the 1997 annual $PM_{2.5}$ NAAQS. On November 13, 2009, and on January 15, 2015, EPA published notices determining that the Hamilton County was designated unclassifiable/attainment for the 2006 24-hour $PM_{2.5}$ NAAQS and the 2012 annual $PM_{2.5}$ NAAQS, respectively. *See* 74 FR 58688 and 80 FR 2206, respectively.

In Tennessee's February 26, 2020, SIP revision, the State concluded that the removal of Hamilton County from Tennessee's SIP-approved I/M program would not interfere with attainment or maintenance of the $PM_{2.5}$ NAAQS for the reasons outlined below. First, photochemical modeling using source apportionment analysis, performed in connection with the November 13, 2014, redesignation request and associated maintenance plan for the Chattanooga $PM_{2.5}$ Area (also known as the Chattanooga $PM_{2.5}$ Redesignation Request and Maintenance Plan) showed that the greatest contribution to ambient $PM_{2.5}$ concentrations in the Chattanooga $PM_{2.5}$ Area is from secondary sulfates, which are formed from atmospheric reactions with sulfur dioxide (SO_2), and that a very small portion of the total $PM_{2.5}$ in the atmosphere is formed from NO_X and VOCs.[12] Second, when the 2022 projected NO_X emissions in the I/M removal request are compared to the emissions inventory for 2022 within the Chattanooga $PM_{2.5}$ Redesignation Request and Maintenance Plan, the projections in the I/M removal request are 2,850 tons less. Third, the Chattanooga $PM_{2.5}$ Redesignation Request and Maintenance Plan did not rely on the I/M program as a permanent and federally-enforceable measure to maintain compliance with the $PM_{2.5}$ NAAQS, and the approved maintenance plan demonstrates maintenance through 2025 without the I/M program (*i.e.,* projected on-road mobile emissions were modeled without the I/M program). Furthermore, the pollution control systems for light-duty gasoline vehicles subject to the I/M program are not designed to reduce emissions of direct $PM_{2.5}$ and sulfate (*i.e.,* the primary precursor for $PM_{2.5}$ formation in the Southeast); therefore, removing counties from the program will not have any impact on ambient concentrations of $PM_{2.5}$ NAAQS.

In addition, Tennessee provided information regarding the monitored values of $PM_{2.5}$ in the Chattanooga $PM_{2.5}$ Area. Ambient air monitoring shows that the 2019 design value for the 24-hour $PM_{2.5}$ NAAQS for the Chattanooga $PM_{2.5}$ Area is 19 μg/m³, which is below the 24-hour NAAQS of 35 μg/m³. The 2019 design value for the 2012 annual $PM_{2.5}$ NAAQS for the Chattanooga $PM_{2.5}$ Area is 8.8 μg/m³, which is below the 2012 annual NAAQS of 12.0 μg/m³.[13] The small increases in NO_X emissions of 1.1 percent and VOC emissions of 1.5 percent that are anticipated to result in 2022 from the removal of the I/M program in Hamilton County is expected to only cause a small increase (if any) in the $PM_{2.5}$ design value for the Chattanooga $PM_{2.5}$ Area.

EPA has evaluated the State's analysis and preliminarily agrees with its findings and conclusions. Therefore, EPA proposes to find that removal of the SIP-approved I/M program requirements for Hamilton County would not interfere with continued attainment or maintenance of the $PM_{2.5}$ NAAQS.

Non-Interference Analysis for the 2010 Nitrogen Dioxide (NO_2) NAAQS[14]

The 2010 1-hour NO_2 standard is set at 100 ppb, based on the 3-year average of the 98th percentile of the yearly distribution of 1-hour daily maximum concentrations. *See* 75 FR 6474 (February 9, 2010). On February 17, 2012, EPA designated all counties in Tennessee as unclassifiable/attainment for the 2010 NO_2 NAAQS. *See* 77 FR 9532.

Based on the technical analysis in Tennessee's February 26, 2020, SIP revision, the projected increase in total NO_X emissions (of which NO_2 is a component) in 2022 associated with the

[12] *See* document EPA–R04–OAR–2014–0904–0002 at *regulations.gov*.

[13] The design value for the Chattanooga $PM_{2.5}$ Area is at monitor 132950002 in Walker County, Georgia.

[14] The annual standard of 53 ppb is based on the annual mean concentration. *See* 36 FR 8186 (April 30, 1971).

removal of Hamilton County from the I/M program is 1.1 percent. All NO_2 monitors in the State are measuring below the annual NO_2 standard, and all near road monitors are measuring well below the 1-hour NO_2 standard. There are no NO_2 monitors in the Chattanooga $PM_{2.5}$ Area.

EPA has evaluated the State's analysis and preliminarily agrees with its findings and conclusions. Therefore, EPA proposes to find that removal of the SIP-approved I/M program requirements for Hamilton County would not interfere with continued attainment or maintenance of the NO_2 NAAQS.

Non-Interference Analysis for the Carbon Monoxide (CO) NAAQS

EPA promulgated the CO NAAQS in 1971 and has retained the standards since its last review of the standards in 2011. The primary NAAQS for CO consist of: (1) An 8-hour standard of 9 ppm, not to be exceeded more than once in a year (*i.e.,* the second highest, non-overlapping 8-hour average concentration cannot exceed the standard); and (2) a 1-hour average of 35 ppm, not to be exceeded more than once in a year. Hamilton County has always been designated as unclassifiable/attainment for the CO NAAQS.

In Tennessee's February 26, 2020, SIP revision, the State concluded that the removal of Hamilton County from the SIP-approved I/M program would not interfere with attainment or maintenance of the CO NAAQS. MOVES2014 mobile emissions modeling results show an increase in CO emissions of 6.9 percent in Hamilton County in 2022 as a result of removing the I/M program for Hamilton County. This increase is not expected to interfere with continued attainment of the CO NAAQS in Hamilton County. Design values for Tennessee for the 1-hour and 8-hour CO NAAQS in 2019 were 1.6 and 1.8, respectively, which are less than 20 percent of the CO NAAQS for both the 1-hour and 8-hour standards.

EPA has evaluated the State's analysis and preliminarily agrees with its findings and conclusions. For these reasons, EPA proposes to find that removal of the SIP-approved I/M program requirements for Hamilton County would not interfere with continued attainment or maintenance of the CO NAAQS.

III. Proposed Action

EPA is proposing to approve the removal of the I/M requirements for Hamilton County from the Tennessee SIP. EPA is proposing to approve the removal of the I/M program requirements for Hamilton County from the federally approved SIP because removing the requirements is consistent with the CAA and applicable regulations.

IV. Statutory and Executive Order Reviews

Under the CAA, the Administrator is required to approve a SIP submission that complies with the provisions of the Act and applicable Federal regulations. *See* 42 U.S.C. 7410(k); 40 CFR 52.02(a). Thus, in reviewing SIP submissions, EPA's role is to approve state choices, provided they meet the criteria of the CAA. This proposed action merely proposes to approve state law as meeting Federal requirements and does not impose additional requirements beyond those imposed by state law. For that reason, this proposed action:

- Is not a significant regulatory action subject to review by the Office of Management and Budget under Executive Orders 12866 (58 FR 51735, October 4, 1993) and 13563 (76 FR 3821, January 21, 2011);
- Is not an Executive Order 13771 (82 FR 9339, February 2, 2017) regulatory action because SIP approvals are exempted under Executive Order 12866;
- Does not impose an information collection burden under the provisions of the Paperwork Reduction Act (44 U.S.C. 3501 *et seq.*);
- Is certified as not having a significant economic impact on a substantial number of small entities under the Regulatory Flexibility Act (5 U.S.C. 601 *et seq.*);
- Does not contain any unfunded mandate or significantly or uniquely affect small governments, as described in the Unfunded Mandates Reform Act of 1995 (Pub. L. 104–4);
- Does not have Federalism implications as specified in Executive Order 13132 (64 FR 43255, August 10, 1999);
- Is not an economically significant regulatory action based on health or safety risks subject to Executive Order 13045 (62 FR 19885, April 23, 1997);
- Is not a significant regulatory action subject to Executive Order 13211 (66 FR 28355, May 22, 2001);
- Is not subject to requirements of Section 12(d) of the National Technology Transfer and Advancement Act of 1995 (15 U.S.C. 272 note) because application of those requirements would be inconsistent with the CAA; and
- Does not provide EPA with the discretionary authority to address, as appropriate, disproportionate human health or environmental effects, using practicable and legally permissible methods, under Executive Order 12898 (59 FR 7629, February 16, 1994).

The SIP is not approved to apply on any Indian reservation land or in any other area where EPA or an Indian tribe has demonstrated that a tribe has jurisdiction. In those areas of Indian country, the rule does not have tribal implications as specified by Executive Order 13175 (65 FR 67249, November 9, 2000), nor will it impose substantial direct costs on tribal governments or preempt tribal law.

List of Subjects in 40 CFR Part 52

Environmental protection, Air pollution control, Carbon monoxide, Incorporation by reference, Intergovernmental relations, Lead, Nitrogen dioxide, Ozone, Particulate matter, Reporting and recordkeeping requirements, Sulfur oxides, Volatile organic compounds.

Authority: 42 U.S.C. 7401 *et seq.*

Dated: May 29, 2020.

Mary Walker,

Regional Administrator, Region 4.

[FR Doc. 2020–12136 Filed 6–5–20; 8:45 am]

BILLING CODE 6560–50–P

ENVIRONMENTAL PROTECTION AGENCY

40 CFR Part 52

[EPA–R06–OAR–2018–0716; FRL–10010–04–Region 6]

Air Plan Approval; Texas; Beaumont-Port Arthur Area Second Maintenance Plan for 1997 Ozone National Ambient Air Quality Standards

AGENCY: Environmental Protection Agency (EPA).

ACTION: Proposed rule.

SUMMARY: Pursuant to the Federal Clean Air Act (CAA or the Act), the Environmental Protection Agency (EPA) is proposing to approve a revision to the Texas State Implementation Plan (SIP). The EPA is proposing to approve the plan for maintaining the 1997 8-hour ozone National Ambient Air Quality Standards (NAAQS or standard) through 2032 in the Beaumont-Port Arthur (BPA) area.

DATES: Written comments must be received on or before July 8, 2020.

ADDRESSES: Submit your comments, identified by Docket No. EPA–R06–OAR–2018–0716, at *https://www.regulations.gov* or via email to *riley.jeffrey@epa.gov.* Follow the online instructions for submitting comments. Once submitted, comments cannot be edited or removed from *Regulations.gov*. The EPA may publish any comment received to its public docket. Do not

submit electronically any information you consider to be Confidential Business Information (CBI) or other information whose disclosure is restricted by statute. Multimedia submissions (audio, video, etc.) must be accompanied by a written comment. The written comment is considered the official comment and should include discussion of all points you wish to make. The EPA will generally not consider comments or comment contents located outside of the primary submission (*i.e.*, on the web, cloud, or other file sharing system). For additional submission methods, please contact Jeff Riley, 214–665–8542, *riley.jeffrey@epa.gov.* For the full EPA public comment policy, information about CBI or multimedia submissions, and general guidance on making effective comments, please visit *https://www.epa.gov/dockets/commenting-epa-dockets.*

Docket: The index to the docket for this action is available electronically at *www.regulations.gov.* While all documents in the docket are listed in the index, some information may not be publicly available due to docket file size restrictions or content (*e.g.,* CBI).

FOR FURTHER INFORMATION CONTACT: Jeff Riley, EPA Region 6 Office, Infrastructure and Ozone Section, 214–665–8542, *riley.jeffrey@epa.gov.* Out of an abundance of caution for members of the public and our staff, the EPA Region 6 office will be closed to the public to reduce the risk of transmitting COVID–19. We encourage the public to submit comments via *https://www.regulations.gov,* as there will be a delay in processing mail and no courier or hand deliveries will be accepted. Please call or email the contact listed above if you need alternative access to material indexed but not provided in the docket.

SUPPLEMENTARY INFORMATION: Throughout this document wherever ''we,'' ''us,'' or ''our'' is used, we mean the EPA.

Table of Contents

I. Summary of EPA's Proposed Action
II. Background
III. The EPA's Evaluation
A. Second Maintenance Plan
B. Transportation Conformity
IV. Proposed Action
V. Statutory and Executive Order Reviews

I. Summary of EPA's Proposed Action

EPA is proposing to approve, as a revision to the Texas SIP, an updated 1997 ozone NAAQS maintenance plan for the Beaumont-Port Arthur area. The maintenance plan is designed to keep the area in attainment of the 1997 ozone NAAQS through the end of the second 10-year maintenance period.

II. Background

Ground-level ozone is formed when oxides of nitrogen (NO_X) and volatile organic compounds (VOC) react in the presence of sunlight. These two pollutants are referred to as ozone precursors. Scientific evidence indicates that adverse public health effects occur following exposure to ozone.

In 1979, under section 109 of the Clean Air Act (CAA), EPA established primary and secondary NAAQS for ozone at 0.12 parts per million (ppm), averaged over a 1-hour period. 44 FR 8202 (February 8, 1979). On July 18, 1997, EPA revised the primary and secondary NAAQS for ozone to set the acceptable level of ozone in the ambient air at 0.08 ppm, averaged over an 8-hour period. 62 FR 38856 (July 18, 1997).[1] EPA set the 8-hour ozone NAAQS based on scientific evidence demonstrating that ozone causes adverse health effects at lower concentrations and over longer periods of time than was understood when the pre-existing 1-hour ozone NAAQS was set.

Following promulgation of a new or revised NAAQS, EPA is required by the CAA to designate areas throughout the nation as attaining or not attaining the NAAQS. On April 15, 2004 (69 FR 23857), EPA designated certain areas for the 1997 ozone NAAQS, including the Beaumont-Port Arthur area, consisting of Hardin, Jefferson and Orange Counties as nonattainment. These designations became effective on June 15, 2004. Under the CAA, states are also required to adopt and submit SIPs to implement, maintain, and enforce the NAAQS in designated nonattainment areas and throughout the state.

When a nonattainment area has three years of complete, certified air quality data that has been determined to attain the 1997 ozone NAAQS, and the area has met other required criteria described in section 107(d)(3)(E) of the CAA, the state can submit to EPA a request to be redesignated to attainment, and if approved, would then be referred to as a ''maintenance area''.[2]

One of the criteria for redesignation is to have an approved maintenance plan under CAA section 175A. The maintenance plan must demonstrate that the area will continue to maintain the standard for the period extending 10 years after redesignation, and it must contain such additional measures as necessary to ensure maintenance and such contingency provisions as necessary to assure that violations of the standard will be promptly corrected. At the end of the eighth year after the effective date of the redesignation, the state must also submit a second maintenance plan to ensure ongoing maintenance of the standard for an additional 10 years. CAA section 175A.

EPA has long-standing guidance for states on developing maintenance plans. This includes ''Procedures for Processing Requests to Redesignate Areas to Attainment,'' Memorandum from John Calcagni, Director, Air Quality Management Division, September 4, 1992 (the ''Calcagni Memorandum'').[3] The Calcagni Memorandum provides that states may generally demonstrate maintenance by either performing air quality modeling to show that the future mix of sources and emission rates will not cause a violation of the NAAQS or by showing that future emissions of a pollutant and its precursors will not exceed the level of emissions during a year when the area was attaining the NAAQS (*i.e.,* attainment year inventory). *See* Calcagni Memorandum at 3.

On December 16, 2008, the Texas Commission on Environmental Quality (TCEQ) submitted a request to EPA to redesignate the Beaumont-Port Arthur area to attainment for the 1997 ozone NAAQS. This submittal included a plan to maintain the 1997 ozone NAAQS in the BPA area through 2021 as a revision to the Texas SIP. EPA approved the maintenance plan for the BPA area and redesignated the area to attainment of the 1997 ozone NAAQS effective November 19, 2010 (75 FR 64675). The Beaumont-Port Arthur area continues to meet the 1997 standard. In fact, air quality has continued to improve. The area's preliminary design value for

[1] In March 2008, EPA completed another review of the primary and secondary ozone standards and tightened them further by lowering the level for both to 0.075 ppm. 73 FR 16436 (March 27, 2008). Additionally, in October 2015, EPA completed a review of the primary and secondary ozone standards and tightened them by lowering the level for both to 0.70 ppm. 80 FR 65292 (October 26, 2015).

[2] Section 107(d)(3)(E) of the CAA sets out the requirements for redesignation. They include attainment of the NAAQS, full approval under section 110(k) of the applicable SIP, determination that improvement in air quality is a result of permanent and enforceable reductions in emissions, demonstration that the state has met all applicable section 110 and part D requirements, and a fully approved maintenance plan under CAA section 175A.

[3] ''Procedures for Processing Requests to Redesignate Areas to Attainment,'' Memorandum from John Calcagni, Director, Air Quality Management Division, September 4, 1992. To view the memo, please visit *https://www.epa.gov/sites/production/files/2016–03/documents/calcagni_memo_-_procedures_for_processing_requests_to_redesignate_areas_to_attainment_090492.pdf.*

2017–2019 is 70 ppb which not only complies with the 1997 standard but also the more stringent 2008 and 2015 ozone standards.

Under CAA section 175A(b), states must submit a revision to the first maintenance plan eight years after redesignation to provide for maintenance of the NAAQS for ten additional years following the end of the first 10-year period. EPA's final implementation rule for the 2008 ozone NAAQS revoked the 1997 ozone NAAQS and provided that one consequence of revocation was that areas that had been redesignated to attainment (*i.e.,* maintenance areas) for the 1997 standard no longer needed to submit second 10-year maintenance plans under CAA section 175A(b).[4] However, in *South Coast Air Quality Management District* v. *EPA*[5] (South Coast II), the D.C. Circuit vacated EPA's interpretation that, because of the revocation of the 1997 ozone standard, second maintenance plans were not required for ''orphan maintenance areas,'' *i.e.,* areas that had been redesignated to attainment for the 1997 NAAQS and were designated attainment for the 2008 ozone NAAQS. Thus, states with these ''orphan maintenance areas'' under the 1997 ozone NAAQS must submit maintenance plans for the second maintenance period. Accordingly, on February 5, 2019, the Texas Commission on Environmental Quality (TCEQ) submitted the second maintenance plan for the Beaumont-Port Arthur area. The maintenance plan shows that the area is expected to remain in attainment of the 1997 ozone NAAQS through the end of the full 20-year maintenance period. The State's submittal also included a request to EPA to redesignate the BPA area to attainment for the revoked 1979 1-hour ozone NAAQS[6] and a plan to provide for maintenance of the 1-hour ozone standard in the BPA area through 2032. EPA is not addressing the 1-hour ozone standard portion of the State's submission at this time.

III. The EPA's Evaluation

A. Second Maintenance Plan

Section 175A of the CAA sets forth the elements of a maintenance plan for areas seeking redesignation from nonattainment to attainment. Under section 175A, the maintenance plan must demonstrate continued attainment of the NAAQS for at least 10 years after the Administrator approves a redesignation to attainment. Eight years after the redesignation, the state must submit a revised maintenance plan which demonstrates that attainment of the NAAQS will continue for an additional 10 years beyond the initial 10-year maintenance period. To address the possibility of future NAAQS violations, the maintenance plan must contain contingency measures, as EPA deems necessary, to assure prompt correction of the future NAAQS violation.

The Calcagni Memorandum provides further guidance on the content of a maintenance plan, explaining that a maintenance plan should address five elements: (1) An attainment emission inventory; (2) a maintenance demonstration; (3) a commitment for continued air quality monitoring; (4) a process for verification of continued attainment; and (5) a contingency plan.

On February 5, 2019, TCEQ submitted, as a SIP revision, a plan to provide for maintenance of the 1997 ozone standard in the Beaumont-Port Arthur area through 2032, more than 20 years after the effective date of redesignation to attainment. As discussed below, EPA finds that Texas' second maintenance plan includes the necessary components and proposes to approve the maintenance plan as a revision to the Texas SIP.

1. Attainment Inventory

For maintenance plans, a state should develop a comprehensive, accurate inventory of actual emissions for an attainment year to identify the level of emissions which is sufficient to maintain the NAAQS. A state should develop this inventory consistent with EPA's most recent guidance on emissions inventory development. For ozone, the inventory should be based on typical summer day VOC and NO_X emissions, as these pollutants are precursors to ozone formation.

The CAA section 175A maintenance plan approved by EPA for the first 10-year period included an attainment inventory that reflects typical summer day VOC and NO_X emissions for the 2005 attainment year. In addition, because the BPA maintenance area continued to monitor attainment of the 1997 ozone NAAQS in 2014, this is also an appropriate year to use for an attainment year inventory. As such, the TCEQ has developed a 2014 attainment year inventory for the BPA area, presented in Table 1 below, to represent the VOC and NO_X emissions that occur on a typical summer weekday. The 2014 attainment year inventory was developed from the 2014 periodic emissions inventory (PEI), in accordance with the Air Emissions Reporting Requirements. *See* 80 FR 8787 (February 19, 2015). For some source categories, the TCEQ developed state-specific emissions estimates by acquiring state-specific activity data and applying appropriate emissions factors in developing the 2014 attainment year inventory, as well as projections for the 2032 maintenance year inventory presented in Table 2 below. These source categories include but are not limited to: Storage tanks, structural fires, dry cleaners, and automobile fires. In particular, the TCEQ focused on refining the oil and gas area source inventory production categories. These inventories also include descriptions of the methods used to estimate emissions.[7] Table 1 shows 2014 attainment year VOC and NO_X emission totals for all sectors for the BPA maintenance area.

TABLE 1—BEAUMONT-PORT ARTHUR AREA TYPICAL SUMMER DAY VOC AND NO_X EMISSIONS FOR ATTAINMENT YEAR 2014 IN TONS PER DAY (tpd)

Source category	VOC	NO_X
Nonroad	2.67	16.66
Onroad	6.27	18.49
Point	32.20	62.25
Area	54.99	3.89
Total	96.13	101.29

2. Maintenance Demonstration

TCEQ is demonstrating maintenance through 2032 by showing that future emissions of VOC and NO_X for the Beaumont-Port Arthur area remain at or below attainment year emission levels. 2032 is an appropriate maintenance year for the BPA area because it is more than 10 years beyond the first 10-year maintenance period. The 2032 emissions inventory is projected from the 2014 PEI, which was the most recent available inventory at the time the TCEQ was preparing the maintenance plan submittal for the BPA area. The 2032 summer day emissions inventory for the Beaumont-Port Arthur area is summarized in Table 2 below.

[4] *See* 80 FR 12315 (March 6, 2015).

[5] 882 F.3d 1138 (D.C. Cir. 2018).

[6] In April 2004, EPA published a rule governing implementation of the 1997 ozone NAAQS (Phase 1 Rule). 69 FR 23951 (April 30, 2004). The Phase 1 Rule revoked the 1-hour ozone NAAQS along with designations and classifications for that standard.

[7] For more information on EIs, including guidance, reports, and resources, see EPA's website at *https://www.epa.gov/air-emissions-inventories.*

TABLE 2—BEAUMONT-PORT ARTHUR AREA TYPICAL SUMMER DAY VOC AND NO_X EMISSIONS FOR MAINTENANCE YEAR 2032

[tpd]

Source category	VOC	NO_X
Nonroad	2.29	7.64
Onroad	2.21	4.76
Point	32.73	62.32
Area	43.65	3.95
Total	80.88	78.67

Table 3 below shows the changes in VOC and NO_X emissions between the attainment year (2014) and maintenance year (2032) for the BPA maintenance area.

TABLE 3—CHANGE IN TYPICAL SUMMER DAY VOC AND NO_X EMISSIONS IN THE BEAUMONT-PORT ARTHUR AREA BETWEEN 2014 AND 2032

[tpd]

Source category	VOC			NO_X		
	2014	2032	Net change (2014–2032)	2014	2032	Net change (2014–2032)
Nonroad	2.67	2.29	−0.38	16.66	7.64	−9.02
Onroad	6.27	2.21	−4.06	18.49	4.76	−13.73
Point	32.20	32.73	+0.53	62.25	62.32	+0.07
Area	54.99	43.65	−11.34	3.89	3.95	+0.06
Total	96.13	80.88	−15.25	101.29	78.67	−22.62

We note the slight increase in point source VOC emissions, which is offset by the decreases in area and mobile source VOC emissions. Additionally, the slight increases in stationary source NO_X emissions are offset by decreases in mobile source NO_X emissions. We also note that the projections for the on-road mobile source inventory for 2032, which TCEQ submitted as motor vehicle emissions budgets, are consistent with maintenance of the 1997 ozone NAAQS. The maintenance demonstration for the BPA area shows maintenance of the 1997 ozone NAAQS by providing emissions information to support the demonstration that future emissions of NO_X and VOC will remain at or below 2014 emission levels when considering both future source growth and implementation of future controls. We are proposing that TCEQ has met the maintenance demonstration requirements on the basis that the approach and methods of calculating the attainment year and future year emission inventories that were used are consistent with EPA guidance.[8]

3. Continued Air Quality Monitoring

TCEQ has committed to continue to operate an approved ozone monitoring network in the Beaumont-Port Arthur area. TCEQ has committed to consult with EPA prior to making changes to the existing monitoring network should changes become necessary in the future. TCEQ remains obligated to meet monitoring requirements and continue to quality assure monitoring data in accordance with 40 CFR part 58, and to enter all data into the Air Quality System in accordance with Federal guidelines.

4. Verification of Continued Attainment

The State of Texas has confirmed that it has the legal authority to enforce and implement the requirements of the maintenance plans for the areas addressed in this action. This includes the authority to adopt, implement, and enforce any subsequent emission control measures determined to be necessary to correct future ozone attainment problems.

Verification of continued attainment is accomplished through operation of the ambient ozone monitoring network and the periodic update of the area's emissions inventory. TCEQ has committed to continue to operate an approved ozone monitoring network in the Beaumont-Port Arthur maintenance area. TCEQ will not discontinue operation, relocate, or otherwise change the existing ozone monitoring network other than through revisions in the network approved by EPA.

In addition, to track future levels of emissions, TCEQ has committed to continue to develop and submit to EPA updated emission inventories for all source categories at least once every three years, consistent with the requirements of 40 CFR part 51, subpart A, and in 40 CFR 51.122. The Consolidated Emissions Reporting Rule (CERR) was promulgated by EPA on June 10, 2002 (67 FR 39602). The CERR was replaced by the Annual Emissions Reporting Requirements on December 17, 2008 (73 FR 76539).

5. Contingency Plan

Section 175A of the CAA requires that the state must adopt a maintenance plan, as a SIP revision, that includes such contingency measures as EPA deems necessary to assure that the state will promptly correct a violation of the NAAQS that occurs after redesignation of the area to attainment of the NAAQS. The maintenance plan must identify: The contingency measures to be considered and, if needed for

[8] See EPA's web page for Emission Models and Other Methods to Produce Emission Inventories. The web page includes general guidance for preparing inventories; estimating commercial marine emission inventories and port emissions; estimating emissions from locomotives; and estimating emissions from aircraft: *https://www.epa.gov/moves/emissions-models-and-other-methods-produce-emission-inventories.*

maintenance, adopted and implemented; a schedule and procedure for adoption and implementation; and, a time limit for action by the state. The state should also identify specific indicators to be used to determine when the contingency measures need to be considered, adopted, and implemented. The maintenance plan must include a commitment that the state will implement all measures with respect to the control of the pollutant that were contained in the SIP before redesignation of the area to attainment in accordance with section 175A(d) of the CAA.

As required by section 175A of the CAA, Texas has adopted a contingency plan for the Beaumont-Port Arthur maintenance area to address possible future ozone air quality problems. The adopted contingency plan maintains the same contingency measures included in the BPA area's first 1997 ozone NAAQS 10-year maintenance plan, approved by EPA on October 20, 2010 (75 FR 64675). The potential contingency measures identified by the TCEQ include, but are not limited to the following:

- Revision to Title 30 of the Texas Administrative Code (TAC) Chapter 117, Subchapter B, Division 1 or Subchapter E, Division 4, to control rich-burn, gas-fired, reciprocating internal combustion engines located in the BPA area.
- Inclusion of one or more counties in the BPA area in 30 TAC Chapter 115 VOC rules for the control of crude and condensate storage tanks at upstream oil and gas exploration and production sites or midstream pipeline breakout stations with uncontrolled flash emissions greater than 25 tons per year.
- Inclusion of one or more counties in the BPA area in 30 TAC Chapter 115 VOC rules for more stringent controls for tank fittings on floating roof tanks, such as slotted guidepoles and other openings on internal and external floating roofs.
- Inclusion of one or more counties in the BPA area in 30 TAC Chapter 115 VOC rules limiting emissions from landings of floating roofs in floating roof tanks.
- Inclusion of one or more counties in the BPA area in 30 TAC Chapter 115 VOC rules for control of VOC emissions from degassing operations for storage tanks with a nominal capacity of 75,000 gallons or more storing materials with a true vapor pressure greater than 2.6 pounds per square inch absolute (psia), or with a nominal capacity of 250,000 gallons or more storing materials with a true vapor pressure of 0.5 psia or greater. Degassing vapors from storage vessels, transport vessels, and marine vessels would be required to vent to a control device until the VOC concentration of the vapors is reduced to less than 34,000 parts per million by volume as methane.
- Expand the Texas Low Emission Diesel marine diesel requirements in 30 TAC § 114.319(c) to include one or more counties in the BPA area.

To qualify as a contingency measure, emissions reductions from that measure must not be factored into the emissions projections used in the maintenance plan. The maintenance plan provides that a monitored and certified violation of the NAAQS triggers the requirement to consider, adopt, and implement the plan's contingency measures. The schedule and procedure for adoption and implementation by the State is no longer than 18 months following a monitored and certified violation of the NAAQS.[9] Given the estimated emissions in the Beaumont nonattainment area, we believe the proposed contingency measures are sufficient to address any potential future violations.

TCEQ's maintenance plan adequately addresses the five basic components of a maintenance plan: attainment inventory, maintenance demonstration, monitoring network, verification of continued attainment, and a contingency plan. As such, EPA is proposing to approve the maintenance plan SIP revision submitted by the TCEQ on the basis that it meets the requirements of CAA section 175A.

B. Transportation Conformity

Transportation conformity is required by section 176(c) of the CAA. Conformity to a SIP means that transportation activities will not cause or contribute to new air quality violations, worsen existing violations, or delay timely attainment of the relevant NAAQS or interim milestones (CAA 176(c)(1)). EPA's conformity rule at 40 CFR part 93 establishes the criteria and procedures for determining whether transportation plans, transportation improvement programs (TIPs), and federally supported highway and transit projects conform to the SIP. EPA's regulation at 40 CFR 93.109 specifies the conformity criteria for each transportation action. *See* Table 1, 40 CFR 93.109.

The BPA maintenance plan submission includes motor vehicle emissions budgets (MVEBs) for the last year of the maintenance plan (in this case 2032). MVEBs are used to conduct regional emissions analyses for transportation conformity purposes. *See* 40 CFR 93.118. The MVEB is the portion of the total allowable emissions in the maintenance demonstration that is allocated to highway and transit vehicle use and emissions. *See* 40 CFR 93.101. The *South Coast II* court decision upheld EPA's revocation of the 1997 ozone NAAQS, which was effective on April 6, 2015. EPA's current transportation conformity regulation requires a regional emissions analysis only during the time period beginning one year after a nonattainment designation for a particular NAAQS until the effective date of revocation of that NAAQS (40 CFR 93.109(c)). Therefore, pursuant to the conformity regulation, a regional emissions analysis using MVEBs is not required for conformity determinations for the 1997 ozone NAAQS because that NAAQS has been revoked (80 FR 12264). As no regional emissions analysis is required for the BPA maintenance area, transportation conformity for the 1997 ozone NAAQS can be demonstrated for transportation plans and TIPs by showing that the remaining criteria contained in Table 1 in 40 CFR 93.109, and 40 CFR 93.108 have been met. Therefore, EPA is not taking any action on the submitted 2032 NO_X and VOC MVEBs for transportation conformity purposes. As noted previously, EPA is proposing to find that the projected emissions inventory which reflects these budgets are consistent with maintenance of the 1997 8-hour ozone standard.

IV. Proposed Action

Under section 175A of the CAA and for the reasons set forth above, based on Texas' representations and commitments set forth above, EPA is proposing to approve the second maintenance plan for the 1997 ozone NAAQS for the Beaumont-Port Arthur area, submitted by TCEQ on February 5, 2019, as a revision to the Texas SIP. This maintenance plan is designed to keep the area in attainment of the 1997 ozone NAAQS through the second 10-year maintenance period.

V. Statutory and Executive Order Reviews

Under the CAA, the Administrator is required to approve a SIP submission that complies with the provisions of the Act and applicable Federal regulations. 42 U.S.C. 7410(k); 40 CFR 52.02(a). Thus, in reviewing SIP submissions, the EPA's role is to approve state choices, provided that they meet the criteria of the CAA. Accordingly, this action

[9] The 1997 eight-hour ozone NAAQS is violated by any consecutive three-year average of each annual fourth-highest daily maximum eight-hour ozone average at or above 85 ppb.

merely proposes to approve state law as meeting Federal requirements and does not impose additional requirements beyond those imposed by state law. For that reason, this action:

- Is not a ''significant regulatory action'' subject to review by the Office of Management and Budget under Executive Orders 12866 (58 FR 51735, October 4, 1993) and 13563 (76 FR 3821, January 21, 2011);
- Is not an Executive Order 13771 (82 FR 9339, February 2, 2017) regulatory action because SIP approvals are exempted under Executive Order 12866;
- Does not impose an information collection burden under the provisions of the Paperwork Reduction Act (44 U.S.C. 3501 *et seq.*);
- Is certified as not having a significant economic impact on a substantial number of small entities under the Regulatory Flexibility Act (5 U.S.C. 601 *et seq.*);
- Does not contain any unfunded mandate or significantly or uniquely affect small governments, as described in the Unfunded Mandates Reform Act of 1995 (Pub. L. 104–4);
- Does not have federalism implications as specified in Executive Order 13132 (64 FR 43255, August 10, 1999);
- Is not an economically significant regulatory action based on health or safety risks subject to Executive Order 13045 (62 FR 19885, April 23, 1997);
- Is not a significant regulatory action subject to Executive Order 13211 (66 FR 28355, May 22, 2001);
- Is not subject to requirements of section 12(d) of the National Technology Transfer and Advancement Act of 1995 (15 U.S.C. 272 note) because application of those requirements would be inconsistent with the CAA; and
- Does not provide EPA with the discretionary authority to address, as appropriate, disproportionate human health or environmental effects, using practicable and legally permissible methods, under Executive Order 12898 (59 FR 7629, February 16, 1994).

In addition, the SIP is not approved to apply on any Indian reservation land or in any other area where EPA or an Indian tribe has demonstrated that a tribe has jurisdiction. In those areas of Indian country, the proposed rule does not have tribal implications and will not impose substantial direct costs on tribal governments or preempt tribal law as specified by Executive Order 13175 (65 FR 67249, November 9, 2000).

List of Subjects in 40 CFR Part 52

Environmental protection, Air pollution control, Incorporation by reference, Intergovernmental relations, Nitrogen dioxide, Ozone, Reporting and recordkeeping requirements, Volatile organic compounds.

Authority: 42 U.S.C. 7401 *et seq.*

Dated: May 29, 2020.

Kenley McQueen,

Regional Administrator, Region 6.

[FR Doc. 2020–12044 Filed 6–5–20; 8:45 am]

BILLING CODE 6560–50–P

ENVIRONMENTAL PROTECTION AGENCY

40 CFR Part 52

[EPA–R04–OAR–2018–0631; FRL–10010–11–Region 4]

Air Plan Approval; TN; Nitrogen Oxides SIP Call Plan

AGENCY: Environmental Protection Agency (EPA).

ACTION: Proposed rule.

SUMMARY: The Environmental Protection Agency (EPA) is proposing to approve a State Implementation Plan (SIP) revision concerning nitrogen oxides (NO_X) emissions submitted by the State of Tennessee, through the Tennessee Department of Environment and Conservation (TDEC), through a letter dated December 19, 2019, which revises the Tennessee Air Pollution Control Rule (TAPCR) titled ''NO_X SIP Call Requirements for Stationary Boilers and Combustion Turbines'' (TN 2017 NO_X SIP Call Rule) to correct the definition of ''affected unit'' and to clarify requirements related to stationary boilers and combustion turbines. EPA is also proposing to convert the conditional approval of the TN 2017 NO_X SIP Call Rule to a full approval.

DATES: Comments must be received on or before July 8, 2020.

ADDRESSES: Submit your comments, identified by Docket ID No. EPA–R04–OAR–2018–0631 at *www.regulations.gov.* Follow the online instructions for submitting comments. Once submitted, comments cannot be edited or removed from *Regulations.gov.* EPA may publish any comment received to its public docket. Do not submit electronically any information you consider to be Confidential Business Information (CBI) or other information whose disclosure is restricted by statute. Multimedia submissions (audio, video, etc.) must be accompanied by a written comment. The written comment is considered the official comment and should include discussion of all points you wish to make. EPA will generally not consider comments or comment contents located outside of the primary submission (*i.e.,* on the web, cloud, or other file sharing system). For additional submission methods, the full EPA public comment policy, information about CBI or multimedia submissions, and general guidance on making effective comments, please visit *www2.epa.gov/dockets/commenting-epa-dockets.*

FOR FURTHER INFORMATION CONTACT: Gobeail McKinley, Air Regulatory Management Section, Air Planning and Implementation Branch, Air and Radiation Division, U.S. Environmental Protection Agency, Region 4, 61 Forsyth Street SW, Atlanta, Georgia 30303–8960. The telephone number is (404) 562–9230. Ms. McKinley can also be reached via electronic mail at *mckinley.gobeail@epa.gov.*

SUPPLEMENTARY INFORMATION:

I. Background

Under Clean Air Act (CAA or Act) section 110(a)(2)(D)(i)(I), which EPA has traditionally termed the good neighbor provision, states are required to address the interstate transport of air pollution. Specifically, the good neighbor provision requires that each state's implementation plan contain adequate provisions to prohibit air pollutant emissions from within the state that will significantly contribute to nonattainment of the national ambient air quality standards (NAAQS), or that will interfere with maintenance of the NAAQS, in any other state.

In October 1998 (63 FR 57356), EPA finalized the ''Finding of Significant Contribution and Rulemaking for Certain States in the Ozone Transport Assessment Group Region for Purposes of Reducing Regional Transport of Ozone'' (''NO_X SIP Call''). The NO_X SIP Call required eastern states, including Tennessee, to submit SIPs that prohibit excessive emissions of ozone season NO_X by implementing statewide emissions budgets.[1] The NO_X SIP Call addressed the good neighbor provision for the 1979 ozone NAAQS and was designed to mitigate the impact of transported NO_X emissions, one of the precursors of ozone. EPA developed the NO_X Budget Trading Program, an allowance trading program that states could adopt to meet their obligations under the NO_X SIP Call. This trading program allowed the following sources to participate in a regional cap and trade

[1] *See* 63 FR 57356 (October 27, 1998). As originally promulgated, the NO_X SIP Call also addressed good neighbor obligations under the 1997 8-hour ozone NAAQS, but EPA subsequently stayed and later rescinded the rule's provisions with respect to that standard. *See* 65 FR 56245 (September 18, 2000); 84 FR 8422 (March 8, 2019).

program: Generally electric generating units (EGUs) with capacity greater than 25 megawatts (MW); and large industrial non-EGUs, such as boilers and combustion turbines, with a rated heat input greater than 250 million British thermal units per hour (MMBtu/hr). The NO_X SIP Call also identified potential reductions from cement kilns and stationary internal combustion engines.

On January 22, 2004, EPA approved into the Tennessee SIP the State's NO_X Budget Trading Program rule.[2] The NO_X Budget Trading Program was implemented from 2003 to 2008. The provisions required EGUs and large non-EGUs in the state to participate in the NO_X Budget Trading Program.

In 2005, EPA published the Clean Air Interstate Rule (CAIR), which required eastern states, including Tennessee, to submit SIPs that prohibited emissions consistent with ozone season (and annual) NO_X budgets. *See* 70 FR 25162 (May 12, 2005). CAIR addressed the good neighbor provision for the 1997 ozone NAAQS and 1997 fine particulate matter ($PM_{2.5}$) NAAQS and was designed to mitigate the impact of transported NO_X emissions with respect to not only ozone but also $PM_{2.5}$. CAIR established several trading programs that EPA implemented through federal implementation plans (FIPs) for EGUs greater than 25 MW in each affected state, but not large non-EGUs; states could submit SIPs to replace the FIPs that achieved the required emission reductions from EGUs and/or other types of sources.[3] When the CAIR trading program for ozone season NO_X was implemented beginning in 2009, EPA discontinued administration of the NO_X Budget Trading Program; however, the requirements of the NO_X SIP Call continued to apply.

On August 20, 2007, EPA approved into the Tennessee SIP an abbreviated CAIR SIP revision with allowance allocations and opt-in provisions.[4] On November 25, 2009, EPA approved into the Tennessee SIP a further abbreviated CAIR SIP revision expanding applicability of the CAIR ozone season NO_X trading program to NO_X SIP Call non-EGUs.[5]

In 2011, EPA published the Cross-State Air Pollution Rule (CSAPR) to replace CAIR and address the good neighbor provisions for the 1997 ozone NAAQS, the 1997 $PM_{2.5}$ NAAQS, and the 2006 $PM_{2.5}$ NAAQS. *See* 76 FR 48208 (August 8, 2011). Through FIPs, CSAPR required EGUs in eastern states, including Tennessee, to meet annual and ozone season NO_X emission budgets and annual SO_2 emission budgets implemented through new trading programs. Implementation of CSAPR began on January 1, 2015.[6] CSAPR also contained provisions that would sunset CAIR-related obligations on a schedule coordinated with the implementation of the CSAPR compliance requirements.

In 2016, EPA published the CSAPR Update to address the good neighbor provision for the 2008 ozone NAAQS. *See* 81 FR 74504 (October 26, 2016). Although for most covered states the CSAPR Update may only partially address the states' good neighbor obligations for this NAAQS, the rule fully addresses Tennessee's good neighbor obligation for this NAAQS.[7] The CSAPR Update trading program replaced the original CSAPR trading program for ozone season NO_X for most covered states. Tennessee's EGUs participate in the CSAPR Update trading program, generally also addressing the state's obligations under the NO_X SIP Call for EGUs. However, Tennessee has not chosen to expand applicability of the CSAPR Update trading program to its large non-EGUs.

Through a letter to EPA dated February 27, 2017,[8] Tennessee provided a SIP revision to incorporate a new provision—TACPR 1200–03–27–.12, ''NO_X SIP Call Requirements for Stationary Boilers and Combustion Turbines'' (TN 2017 NO_X SIP Call Rule)—into the SIP. The TN 2017 NO_X SIP Call Rule established a state control program for sources that are subject to the NO_X SIP Call, but not covered under CSAPR or the CSAPR Update. The TN 2017 NO_X SIP Call Rule contains several subsections that together comprise a non-EGU control program under which Tennessee will allocate a specified budget of allowances to affected sources. Subsequently, on May 11, 2018 and October 11, 2018, Tennessee submitted letters requesting conditional approval of the 2017 NO_X SIP Call Rule and committing to provide a SIP revision to EPA by December 31, 2019, to address a deficiency by revising the definition of ''affected unit'' to remove the unqualified exclusion for any unit that serves a generator that produces power for sale. Based on the State's commitment to submit a SIP revision addressing the identified deficiency, EPA conditionally approved the February 27, 2017, submission. In the same action, EPA approved removal of the state's NO_X Budget Trading Program and CAIR rules from the State's SIP. *See* 84 FR 7998 (March 6, 2019).

II. EPA's Proposed Action

EPA is proposing to approve Tennessee's December 19, 2019, SIP submittal, which revises TAPCR 1200–03–27–.12, ''NO_X SIP Call Requirements for Stationary Boilers and Combustion Turbines'' to correct the definition of ''affected unit'' and to clarify requirements related to stationary boilers and combustion turbines (additional details are provided in section III of this proposal). In addition, EPA is proposing to convert EPA's March 6, 2019, conditional approval to a full approval.

III. Tennessee's SIP Submission and EPA's Analysis

In accordance with its commitment letters, Tennessee submitted a SIP revision on December 19, 2019, requesting EPA approval of revisions to TAPCR 1200–03–27–.12, ''NO_X SIP Call Requirements for Stationary Boilers and Combustion Turbines.'' To address the deficiency in the TN 2017 NO_X SIP Call Rule identified by EPA, in the December 19, 2019 submission, the State revises the definition of ''affected unit'' to remove the unqualified exclusion for any unit that serves a generator that produces power for sale and add exclusions for units that are subject to the current CSAPR Update trading program for ozone season NO_X. In addition, Tennessee is requesting EPA approve the following modifications to the rule: (1) Amending the definition of ''maximum design heat input'' by adding ''MM'' to ''BTU/hr'' to correct a minor typo; (2) clarifying the formula for the allocation of NO_X allowances to include the number of hours in Tennessee's ozone season; and (3) clarifying the requirements for a Responsible Official for purposes of compliance with 40 CFR part 75.[9]

EPA has reviewed the December 19, 2019, SIP submission and is proposing to find that the revisions to TAPCR 1200–03–27–.12 comply with the NO_X SIP Call requirements for non-EGUs and the CAA. With respect to the changes to

[2] *See* 69 FR 3015 (January 22, 2004).

[3] CAIR had separate trading programs for annual sulfur dioxide emissions, seasonal NO_X emissions and annual NO_X emissions.

[4] *See* 72 FR 46388.

[5] *See* 74 FR 61535.

[6] *See* 79 FR 71663 (December 3, 2014) and 81 FR 13275 (March 14, 2016).

[7] *See* 81 FR at 74540. EPA notes that the aspects of the CSAPR Update affecting Tennessee were not challenged in the litigation over the rule and are not affected by the remand of the rule in *Wisconsin* v. *EPA,* 983 F.3d 303 (D.C. Cir. 2019).

[8] EPA notes that it received the submittal on February 28, 2017.

[9] In addition, EPA is proposing to approve TAPCR 1200–03–27–.12(7)(b)4, which currently reads [Reserved] and thus has no substantive requirements, into the SIP. TAPCR 1200–03–27–.12(7)(b)4 has not previously been approved into the Tennessee SIP. *See* 84 FR 7998 (March 6, 2019).

the definition of ''affected unit,'' if approved, Tennessee's SIP will address all types of sources that must be covered to fully address NO_X SIP Call requirements. *See* 83 FR 64497 (December 17, 2018) (including a discussion of both sources covered under CSAPR and the sources subject to 1200–03–27–.12). With respect to the additional modifications to correct minor typographical errors, the formula for NO_X allocations, and the requirements for the Responsible Official, EPA preliminarily agrees that the modifications provide additional clarity to the SIP. In addition, EPA has preliminarily determined that the December 19, 2019, SIP revision satisfies the conditions listed in EPA's March 6, 2019 conditional approval and is proposing to convert its prior conditional approval to full approval.

IV. Incorporation by Reference

In this document, EPA is proposing to include in a final EPA rule regulatory text that includes incorporation by reference. In accordance with requirements of 1 CFR 51.5, EPA is proposing to incorporate by reference TAPCR 1200–03–27-.12, ''NO_X SIP Call Requirements for Stationary Boilers and Combustion Turbines,'' state effective December 12, 2019, which revises Tennessee's state control program to comply with the obligations of the NO_X SIP Call. EPA has made and will continue to make the State Implementation Plan generally available through *www.regulations.gov* and at the EPA Region 4 Office (please contact the person identified in the **FOR FURTHER INFORMATION CONTACT** section of this preamble for more information).

V. Proposed Action

EPA is proposing to approve Tennessee's December 19, 2019, submission, which revises TAPCR 1200–03–27–.12, ''NO_X SIP Call Requirements for Stationary Boilers and Combustion Turbines,'' to correct the definition of ''affected unit'' and to clarify requirements related to stationary boilers and combustion turbines. In addition, EPA is proposing to convert the March 6, 2019 conditional approval of TAPCR 1200–03–27-.12 to a full approval. EPA requests comment on these proposals.

VI. Statutory and Executive Order Reviews

Under the CAA, the Administrator is required to approve a SIP submission that complies with the provisions of the CAA and applicable Federal regulations. 42 U.S.C. 7410(k); 40 CFR 52.02(a). Thus, in reviewing SIP submissions, EPA's role is to approve state choices, provided that they meet the criteria of the CAA. Accordingly, this proposed action merely proposes to approve state law as meeting Federal requirements and does not impose additional requirements beyond those imposed by state law. For that reason, this proposed action:

- Is not a significant regulatory action subject to review by the Office of Management and Budget under Executive Orders 12866 (58 FR 51735, October 4, 1993) and 13563 (76 FR 3821, January 21, 2011);
- Is not an Executive Order 13771 (82 FR 9339, February 2, 2017) regulatory action because SIP approvals are exempted under Executive Order 12866;
- Does not impose an information collection burden under the provisions of the Paperwork Reduction Act (44 U.S.C. 3501 *et seq.*);
- Is certified as not having a significant economic impact on a substantial number of small entities under the Regulatory Flexibility Act (5 U.S.C. 601 *et seq.*);
- Does not contain any unfunded mandate or significantly or uniquely affect small governments, as described in the Unfunded Mandates Reform Act of 1995 (Pub. L. 104–4);
- Does not have Federalism implications as specified in Executive Order 13132 (64 FR 43255, August 10, 1999);
- Is not an economically significant regulatory action based on health or safety risks subject to Executive Order 13045 (62 FR 19885, April 23, 1997);
- Is not a significant regulatory action subject to Executive Order 13211 (66 FR 28355, May 22, 2001);
- Is not subject to requirements of Section 12(d) of the National Technology Transfer and Advancement Act of 1995 (15 U.S.C. 272 note) because application of those requirements would be inconsistent with the CAA; and
- Does not provide EPA with the discretionary authority to address, as appropriate, disproportionate human health or environmental effects, using practicable and legally permissible methods, under Executive Order 12898 (59 FR 7629, February 16, 1994).

In addition, the SIP is not approved to apply on any Indian reservation land or in any other area where EPA or an Indian tribe has demonstrated that a tribe has jurisdiction. In those areas of Indian country, the rule does not have tribal implications and will not impose substantial direct costs on tribal governments or preempt tribal law as specified by Executive Order 13175 (65 FR 67249, November 9, 2000).

List of Subjects in 40 CFR Part 52

Environmental protection, Air pollution control, Incorporation by reference, Intergovernmental relations, Nitrogen dioxide, Ozone, Particulate matter, Reporting and recordkeeping requirements, Sulfur oxides.

Authority: 42 U.S.C. 7401 *et seq.*

Dated: May 29, 2020.

Mary Walker,

Regional Administrator, Region 4.

[FR Doc. 2020–12141 Filed 6–5–20; 8:45 am]

BILLING CODE 6560–50–P

ENVIRONMENTAL PROTECTION AGENCY

40 CFR Part 80

[EPA–HQ–OAR–2020–0240; FRL–10009–02–OAR]

Proposed Anti-Backsliding Determination for Renewable Fuels and Air Quality

AGENCY: Environmental Protection Agency (EPA).

ACTION: Notice of availability and request for public comment.

SUMMARY: The Environmental Protection Agency (EPA) is proposing that no additional measures are necessary pursuant to Clean Air Act (CAA) section 211(v) to mitigate the adverse air quality impacts of the renewable fuel volumes required under CAA section 211(o). EPA is providing an opportunity for the public to comment on this proposed determination.

DATES: Comments must be received on or before July 8, 2020.

ADDRESSES: Submit your comments, identified by Docket ID No. EPA–HQ–OAR–2020–0240, at *https://www.regulations.gov.* Follow the online instructions for submitting comments. Once submitted, comments cannot be edited or removed from *Regulations.gov*. EPA may publish any comment received to its public docket. Do not submit electronically any information you consider to be Confidential Business Information (CBI) or other information whose disclosure is restricted by statute. Multimedia submissions (audio, video, etc.) must be accompanied by a written comment. The written comment is considered the official comment and should include discussion of all points you wish to make. EPA will generally not consider comments or comment contents located outside of the primary submission (*i.e.,* on the web, cloud, or other file sharing system). For additional submission methods, the full

EPA public comment policy, information about CBI or multimedia submissions, and general guidance on making effective comments, please visit *https://www.epa.gov/dockets/commenting-epa-dockets.*

FOR FURTHER INFORMATION CONTACT: Rich Cook, Office of Transportation and Air Quality, Assessment and Standards Division, Environmental Protection Agency, 2000 Traverwood Drive, Ann Arbor, MI 48105; telephone number: 734–214–4827; email address: *cook.rich@epa.gov.* Comments on this proposal should not be submitted to this email address, but rather through *https://www.regulations.gov* as discussed in the **ADDRESSES** section.

SUPPLEMENTARY INFORMATION:

I. Background

CAA section 211(v) requires EPA to take two actions. First, EPA must complete ''a study to determine whether the renewable fuel volumes required under [CAA section 211(o)] will adversely impact air quality as a result in changes of vehicle and engine emissions of air pollutants.'' The study, commonly known as the ''anti-backsliding study,'' must include consideration of different blend levels, types of renewable fuels, and available vehicle technologies, as well as appropriate national, regional, and local air quality control measures. EPA has completed the required study, which is available in the docket for this action and at *https://www.epa.gov/renewable-fuel-standard-program/anti-backsliding-determination-and-study.*

Second, considering the results of the study, EPA must proceed down one of two paths: Either ''promulgate fuel regulations to implement appropriate measures to mitigate, to the greatest extent achievable . . . any adverse impacts on air quality, as a result of the renewable volumes required by [Section 211]'' or ''make a determination that no such measures are necessary.''

II. Proposed Determination

We are proposing to determine that no additional appropriate fuel control measures are necessary to mitigate adverse air quality impacts of required renewable fuel volumes. More information on this determination can be found in the supporting document, which is available in the docket for this action and at *https://www.epa.gov/renewable-fuel-standard-program/anti-backsliding-determination-and-study.*

We seek comment on this proposed determination.

Andrew Wheeler,

Administrator.

[FR Doc. 2020–11991 Filed 6–5–20; 8:45 am]

BILLING CODE 6560–50–P

DEPARTMENT OF THE INTERIOR

Bureau of Land Management

43 CFR Parts 5000, 5400, 5410, 5420, 5430, 5440, 5450, 5460, 5470, and 5500

[LLWO200000 L63100000 PH0000 19X]

RIN 1004–AE61

Forest Management Decision Protest Process and Timber Sale Administration

AGENCY: Bureau of Land Management, Interior.

ACTION: Proposed rule.

SUMMARY: The Bureau of Land Management (BLM) proposes to revise its regulations for protests of forest management decisions and administration of the timber sale process. This proposed rule would streamline the process for sale of forest products by the BLM. Existing regulatory requirements are poorly defined, repetitive, and burdensome. The proposed rule would improve the BLM's ability to conduct active forest management, while reducing burdens to the public and the administration of BLM lands.

DATES: Please submit comments on this proposed rule to the BLM on or before August 7, 2020. The BLM is not obligated to consider any comments received after this date in making its decision on the final rule.

Information Collection Requirements: If you wish to comment on the information-collection requirements in this proposed rule, please note that the Office of Management and Budget (OMB) is required to make a decision concerning the collection of information contained in this proposed rule between 30 and 60 days after publication of this proposed rule in the **Federal Register**. Therefore, comments should be submitted to OMB by July 8, 2020.

ADDRESSES: You may submit comments on the proposed rule, identified by the number RIN 1004–AE61, by any of the following methods:

—*Mail, personal, or messenger delivery:* U.S. Department of the Interior, Director (630), Bureau of Land Management, Mail Stop 2134 LM, 1849 C St. NW, Washington, DC 20240, Attention: RIN 1004–AE61.

—*Federal eRulemaking portal: http://www.regulations.gov.* In the Searchbox, enter ''RIN 1004–AE61'' and click the ''Search'' button. Follow the instructions at this website.

Information Collection Requirements: Written comments and suggestions on the information-collection requirements should be submitted within 30 days of publication of this notice to *www.reginfo.gov/public/do/PRAMain.* Find this particular information collection by selecting ''Currently under 30-day Review—Open for Public Comments'' or by using the search function. Please provide a copy of your comments to Faith Bremner, Senior Regulatory Analyst, Bureau of Land Management, Mail Stop 2134 LM, 1849 C Street NW, Washington, DC 20240; or by email to *fbremner@blm.gov.* Please reference OMB Control Number 1004–AE61 in the subject line of your comments.

Comments not pertaining to the proposed rule's information-collection burdens should not be submitted to OMB. The BLM is not obligated to consider or include in the Administrative Record for the final rule any comments that are directed improperly to OMB.

FOR FURTHER INFORMATION CONTACT: Marlo Draper, Division Chief of Forest, Range, Riparian, and Plant Conservation, WO–220, 202–912–7222. Persons who use a telecommunications device for the deaf (TDD) may call the Federal Relay Service (FRS) at 1–800–877–8339, 24 hours a day,7 days a week, to leave a message or question with the above individuals. You will receive a reply during normal business hours.

SUPPLEMENTARY INFORMATION:

I. Public Comment Procedures
II. Background
III. Discussion of the Proposed Rule
IV. Procedural Matters

I. Public Comment Procedures

You may submit comments on the proposed rule, marked with the number RIN 1004–AE61, by any of the methods described in the **ADDRESSES** section. If you wish to comment on the information-collection requirements, you should send those comments as outlined under the **DATES** and **ADDRESSES** headings. Please make your comments on the proposed rule as specific as possible, confine them to issues pertinent to the proposed rule, and explain the reason for any changes you recommend. Where possible, your comments should reference the specific section or paragraph of the proposal that

you are addressing. The comments and recommendations that will be most useful and likely to influence agency decisions are:

1. Those supported by quantitative information or studies; and
2. Those that include citations to, and analyses of, the applicable laws and regulations.

The BLM is not obligated to consider or include in the Administrative Record for the final rule comments that we receive after the close of the comment period (see **DATES**) or comments delivered to an address other than those listed above (see **ADDRESSES**).

Comments on the proposed rule, including names and street addresses of respondents, will be available for public review at the address listed under ''**ADDRESSES:** Personal or messenger delivery'' during regular business hours (7:45 a.m. to 4:15 p.m.), Monday through Friday, except holidays.

Before including your address, telephone number, email address, or other personal identifying information in your comment, be advised that your entire comment—including your personal identifying information—may be made publicly available at any time. While you can ask us in your comment to withhold your personal identifying information from public review, we cannot guarantee that we will be able to do so.

II. Background

Pursuant to the Oregon and California Grant Lands Act (O&C Act) and the Coos Bay Wagon Road Grant Lands Act (CBWR Act) (43 U.S.C. 2601 *et seq.*), jointly referred to as the O&C Act, the BLM is required to manage approximately 2.4 million acres for forest production in conformity with the principle of sustained yield. In accordance with the O&C Act, the BLM declares the allowable sale quantity (ASQ) of timber for each sustained yield unit in its Resource Management Plans (RMPs) for western Oregon and then offers for sale a volume of timber equal to the declared ASQ on an annual basis. *See Swanson* v. *Bernhardt,* No. 1:15–cv–01419 (D.D.C) (September 30, 2019 Order). The O&C Act is a dominant use statute for sustained yield timber production. Under the Materials Act of 1947 (30 U.S.C. 601 *et seq.*); and other legal authorities, the BLM is authorized to convey timber and other vegetative materials on other lands owned by the United States. The Federal Land Policy and Management Act (FLPMA) (43 U.S.C. 1701 *et seq.*) charges the BLM with managing public lands on the basis of multiple use and sustained yield, unless otherwise specified by law.

The regulations pertaining to the Administration of Forest Management Decisions (43 CFR part 5000) were promulgated in 1984 (49 FR 28561 (July 13, 1984)), and 43 CFR part 5400 pertaining to the Sale of Forest Products were promulgated beginning in 1970 (35 FR 9785, June 13, 1970). These regulations were adopted to implement the Materials Act and the O&C Act. The BLM has amended these regulations since their original promulgation to expedite implementation of decisions relating to forest management, to improve agency procedures, and to update the regulations for consistency with statutory changes.

In 1984, the BLM proposed to add a 15-day public-protest process to certain forest management decisions, including advertised timber sales. This measure was expected to ''expedite implementation of decisions relating to timber management'' and ''increase the probability that private businesses dependent upon the Bureau of Land Management's timber management contracts would be able to accomplish their regularly scheduled activities'' (49 FR 3884, Jan. 31, 1984). The BLM issued a final rule adopting a 15-day protest period and establishing that filing a notice of appeal with the Interior Board of Land Appeals under 43 CFR part 4 does not automatically suspend the effect of forest management decisions that are posted and protested as described under 43 CFR 5003.2 and 5003.3 later that year. The BLM has not revised the protest process since the final rule was issued in 1984, although the way that the BLM plans forest management projects and completes the environmental review of these projects has changed significantly since that time.

When the forest management rules were promulgated in 1984, the BLM designed individual timber sales that were based on the location and extent of the forest management activity. Over time, the BLM has changed the way it designs its timber sales and other forest management projects and often conducts its environmental review on multiple projects in a single watershed or on a biologically relevant scale, such as wildlife habitat for a particular species. Moreover, the BLM promotes collaboration and information-sharing during the National Environmental Policy Act (NEPA) process, and today more interested individuals and parties participate in the public involvement opportunities during the decision-making process when their input is most helpful. While the protest process was originally proposed to ''expedite implementation of decisions relating to timber management,'' in some cases today individuals and organizations that are not satisfied with the final forest management decision are using the protest process to delay implementation by filing lengthy protests with the same comments that were previously raised during the NEPA process and with no explanation of how the BLM failed to address these previously submitted comments. Responding to these protests can be costly to the BLM in terms of time and other resources, and in many cases may not improve the agency decision or reduce appeals and litigation.

The proposed amendments eliminate the protest process after a forest management decision is issued. This change would help the BLM achieve the original purpose of the process, expediting the implementation of timber management decisions, while still providing ample opportunity for public comment and input, including, but not limited to, comment during the NEPA review process.

Under the current regulations, the BLM regularly issues forest management decisions that cannot be protested until the BLM issues a notice of an advertised timber sale, which, in many cases, occurs long after the environmental review has taken place. The proposed amendments streamline the procedures governing forest management decisions by allowing a single forest management decision to cover all forest management activities covered in an environmental review document. This change would allow the public to identify any resource conflicts or other issues of concern earlier in the BLM's forest management process, and enhance the BLM's ability to resolve those issues before it advertises a timber sale or implements other forest management activities. It would also enhance administrative efficiencies by allowing the BLM to simultaneously address issues associated with multiple individual sales and other forest management activities in a single decision. In addition, many of the BLM's decisions are time sensitive in nature, such as fire resilience thinning, thinning for insect and disease resilience, or post-fire salvage sales. The BLM desires to be more responsive to developing forest health issues and identified wildfire risks. Moreover, in western Oregon, streamlining the forest management decision-making process would help the BLM to more expeditiously offer timber sales on O&C lands in order to achieve the declared ASQ in accordance with the O&C Act.

The proposal also seeks to better utilize communications technology by

making decisions available online and allowing electronic submission of public comments. These changes would increase efficiency for both the public and the BLM.

Additionally, this proposed rule contains a number of updates and revisions to part 5400 Sale of Forest Products. This rule would update the regulations to conform to statutes prohibiting the export of unprocessed Federal timber, and proposes changes in scale sale procedures that respond to the increased interest in developing innovative methods to administer scale sales. In general, the proposed revisions seek to provide better clarity of sale contract terms and conditions, and to give the BLM greater flexibility to conduct sales efficiently.

III. Discussion of the Proposed Rule

Part 5000 Administration of Forest Management Decisions

While a protest process for forest management decisions is not required by statute, the BLM's current regulations include a discretionary protest process that may be available for certain authorizations relating to forest management. This discretionary protest process is largely duplicative of other opportunities for public involvement, including through the NEPA process. In general, the best opportunity to influence management of resources is during the early stages of public comment periods provided during the NEPA process and prior to the formulation of a decision. At least in some instances, the protest process adds time and expense to the decision-making process, contrary to the express purpose of the 1984 rulemaking; may not avert administrative appeals and judicial litigation; and, most importantly, may not produce better BLM decisions and resource management outcomes. In addition, a significant number of timber sales are developed to reduce the potential for high-severity wildfire. Prolonged decision-making processes delay implementation of critical wildfire mitigation treatments that often have the objective of protecting human health and safety. Consequently, the BLM is proposing to eliminate the protest process. Forest management decisions would still generally be subject to appeal to the Interior Board of Land Appeals (IBLA) or challengeable in Federal court.

In the alternative, through this rulemaking, the BLM is also considering and seeks comments from the public about replacing the current public protest process with a 10-day public comment period for proposed decisions, or maintaining a protest process, including by modifying the procedures governing that process.

The BLM proposes modifications to improve and streamline the forest management decision-making process. Specifically, the BLM proposes to add a definition of ''forest management activity,'' and describe how the BLM would provide notice of forest management decisions.

The proposed revision to 43 CFR 5003.1(a) would clarify that forest management decisions issued under § 5003.2 could, at the discretion of the authorized officer, be implemented immediately or at a different date specified in the decision. The proposed revision would also clarify that forest management decisions would not automatically be stayed under 43 CFR 4.21(a) if notice of appeal or a petition for a stay pending appeal were lodged with the IBLA. The BLM specifically seeks public comment on whether the BLM should have discretion to issue all or some forest management decisions in full force and effect, including whether there should be specific criteria that the BLM should consider.

The proposed revision to § 5003.2(a) now includes a reference to a new definition for a forest management activity in § 5003.4 and clarifies that the BLM authorizes forest management activities by issuing forest management decisions.

Revisions to § 5003.2(a) would change the primary medium of public notice from publication in a newspaper of general circulation in the area where the lands affected by the decision are located to posting it on a designated agency website. In general, web-based communication is more convenient and accessible than print newspapers. In many areas, print newspapers have transitioned to news websites, which makes the notice requirements in the current regulations impractical in areas that lack print newspapers.

Proposed changes to § 5003.2(b) also would require the authorized officer to provide notice of a forest management decision by publishing notice in a newspaper of general circulation in the area, sending notice to interested parties directly, or notifying the general public through various means, such as social media, email, or other mass-media platforms in addition to posting the decision on the agency website. This proposed change is intended to further facilitate notice reaching interested parties, including those who may not have web access.

This proposed rulemaking would eliminate § 5003.3, which governs the protest process. The BLM specifically requests comments about this proposed change, including about other opportunities to foster public involvement in forest management decisions, such as through the NEPA process, or whether, for some or all proposed forest management decisions, the BLM should allow for a protest process or a public comment period.

The current regulations address forest management decisions for forest management activities, but they do not define a forest management activity. Section 5003.4 of the proposed rules includes a definition of forest management activity that would clarify the type of activities that would fall under the scope of this section of the regulations. The proposed definition emphasizes that a forest management activity has a silvicultural or forest-protection objective. These activities result in changes to forest or forest adjacent vegetation that have an explicit forest output or ecological condition as the outcome of the activity, and may include other activities that facilitate or complement the forest management activity. Examples of forest management activities may include: Cutting of trees and vegetation; harvesting; tree planting; seedling protection; vegetation type conversions; fuels reduction; fire pre-suppression; and road construction and maintenance, when these activities are intended to provide, for example, a commercial forest product, improve tree and forest heath, reduce fire risk, increase forest resiliency to environmental stressors, or address insect or disease infestations. A forest management activity would not include, for example, clearing trees for the construction of a power line in a right of way.

The BLM specifically requests comments on the proposed elimination of the public protest procedures in § 5003.3, including comment on alternative procedures that the BLM should consider with respect to comments and protests, such as a discretionary 10-day public comment period to allow for substantive comment on a proposed forest management decision.

Part 5400 Sales of Forest Products; General

Section 5400.0–3 contains the authority for part 5400. Section 5400.0–3(c) references a law related to the prohibition of exporting unprocessed timber from Federal lands that was superseded by 16 U.S.C. 620. The proposed changes to this section would reference the BLM's current statutory requirements.

Section 5400.0–5 contains the definitions for part 5400. The proposed rule would add new definitions for ''lump sum sale'' and ''scale sale,'' which are used, but not defined, in the current regulations. These two sale types are the only sale types the BLM uses. These definitions would ensure a common understanding of the key difference between these sale types, which relates to how the volume of the forest product is determined.

The Fair Market Value definition would be updated by deleting the second sentence referencing a BLM Manual that is no longer effective. This change would have no effect because appraisal guidance was updated in 1996 to address this change. Three other proposed changes in § 5400.0–5 relate to the administration of the export provisions of this rule. The terms ''export'' and ''sourcing area'' would be added to provide a basis for determining a violation of the export prohibition. The substitution definition would be changed to update the time period from 12 months to 24 months to conform to 16 U.S.C. 620, and to also delete a reference to a substitution exception for rights-of-way that is not included in the statute.

Changes to § 5402.0–6(d) would delete an exception to substitution restrictions that is not provided by statute 16 U.S.C. 620. This exception was established in the BLM's regulations prior to the passage of the statute.

Section 5402.0–6(e) would amend the rule to clarify how special forest product prices would be determined. The BLM sells permits to the public for special forest products, which include fuelwood, Christmas trees, edibles, pine nuts, cones, seedlings, and other forest products other than sawtimber. BLM State Offices generally publish a price list based on estimated values within a State. Current regulations in § 5420.0–6 require that all vegetative resources be appraised and in no case be sold at less than appraised value. BLM offices are concerned that selling products at the published price for the State is not consistent with subpart 5420, because the value of products across a State can vary. The addition of § 5402.0–6(e) would clarify that vegetative products can be sold by permit without appraisal after payment of adequate compensation, which is the standard in the authorizing statute. This means that price lists developed by BLM managers for special forest product permits could be used, and that individual appraisals for each permit sale would not be required.

Section 5420.0–6 currently requires appraisal of all timber and vegetative resources that are sold, and in no case sold for less than the appraised value. An exemption for special forest products would be added which references § 5402.0–6(e) as described in the previous section. The proposed rule removes the phrase ''prohibiting the sale of products at less than appraised value'' to allow the BLM to award timber sale contracts or vegetative material permits if bids come in below the appraised value. The Materials Act of 1947 (30 U.S.C 601) requires the BLM to advertise timber sales and to award sales to the highest bidder. The BLM is not required by law to sell timber at or above the appraised value. Producing highly accurate appraisals is costly due to factors such as acquiring log price data, labor costs, and equipment costs, including fuel, maintenance, and depreciation. This has two potentially negative consequences. First, the BLM could incur a high cost to produce an appraisal, which is particularly counterproductive for lower value products. Second, an appraisal could over-price a sale and result in no bids. No-bid sales result in increased costs associated with reappraising and reoffering a sale and are particularly costly for salvage sales where the timber quality rapidly deteriorates. The proposed changes to this section are intended to continue the practice of appraising timber as a guide to determining a reasonable price, but also to allow the BLM to sell products to the highest bidder at a price below the appraised price if the authorized officer receives a reasonable bid. This provision recognizes that an appraisal is an estimate of the market price, but that competitive bidding through an auction or a sealed bid is generally superior at identifying the true market price. The proposed revision anticipates increased efficiency in appraisals and a reduction in no bid sales.

This proposed rule would also change the title of § 5422.1 from ''Cruise Sales'' to ''Lump-Sum Sales.'' This section would be revised to say that a lump-sum sale is most often estimated using a tree cruise method. The BLM does not use the term ''cruise sale,'' though it is generally understood to mean lump sum. This revision is intended to clarify that both sale types are legitimate and available for use based on an authorized officer's discretion.

Changes to § 5422.2 would revise some of the rules for the use of scale sales and reorganize the section for clarity. The current regulations limit the use of scale sales to events such as timber disasters or imminent resource loss. Other circumstances in which its use is permitted are ambiguous. Implementation of this section in the existing rule has generally discouraged scale sales, despite the fact that it is a standard practice in the logging industry and its use is common among other sellers of timber, such as State governments and the U.S. Forest Service. The proposed rule would permit the use of scale sales at the discretion of the authorized officer and would not limit the use of scale sales to events such as timber disasters or imminent resource loss. The term ''scale sales'' includes the use of weight scales, including third party weight scales that are certified by a State government for timber sold on a per-ton basis. Section 5422.2 currently does not mention weight scales, which can lead to the incorrect conclusion that the term scale sale in the current rule is only referring to log scaling using a log rule.

Section 5424.1 relates to the enforcement of the export prohibition. Timber export laws are designed to not only prohibit the timber cut from Federal land from being exported, but also to prohibit Federal timber from being used as a substitute for other timber the purchaser owns and exports. The revision to this section would update the time period for tracking and reporting the export of private timber for a purchaser or an affiliate of a purchaser of Federal timber from 1 year to 2 years. This proposed revision is intended to bring the rule into conformance with the Forest Resources Conservation and Shortage Relief Act of 1990, as amended.

Section 5430.0–6 would give the BLM the option to advertise competitive timber sales on an agency website.

Section 5441.1 would establish the qualifications for bidders on BLM timber sales. Proposed revisions to this section pertain to the debarment regulations at 2 CFR part 180. Under proposed § 5441.1(c), an individual or entity could be disqualified as a bidder on a BLM timber sale if that individual or entity is debarred in the Federal Government-wide debarment list. In accordance with 2 CFR part 180, there is a process for petitioning for an exception from debarment which is noted in the proposed § 5441.1(c)(1). The revision to this section would bring it into conformance with 2 CFR part 180.

Section 5441.1–1 sets forth the proposed requirements for a bid deposit that must accompany a bid on a timber sale. The proposed rule would allow the BLM to refund up to half of the bid deposit if the award of the sale is delayed for more than 90 days. In some

instances in which a sale is conducted, a high bidder is announced, and then before award of the contract, circumstances, such as a court injunction, delay the award of the timber sale contract. Given that bid deposits are 10 percent of the appraised value, a deposit can be substantial. The BLM recognizes that delays in the award of timber sale contracts is a burden for purchasers; thus, this proposed revision would help reduce that burden.

Section 5441.1–2 refers to a Small Business Administration road construction loan program that no longer exists. This section would be deleted because it is obsolete.

Section 5451.1 pertains to performance bonds for timber sale contracts, which function to protect the government's interest in Federal lands and resources by helping to ensure the fulfillment of a purchaser's contract obligations and the BLM's resource objectives. Performance bonds may be held by the BLM when a purchaser is not in compliance with contract terms and conditions. The bond can be forfeited to the BLM to cover costs of remedying unfinished contract obligations. Currently, a performance bond is required for all contracts for the sale of products greater than or equal to $2,500, and for installment contracts of less than $2,500. For cash sales of less than $2,500, bond requirements are at the discretion of the authorized officer. The proposed rule would require a performance bond for all contracts for the sale of products greater than or equal to $10,000, and impose a minimum performance bond of not less than $500 or 20 percent of the contract price, whichever is greater, for all installment contracts of less than $10,000. For all cash sales less than $10,000, bond requirements would be at the discretion of the authorized officer. Under the proposed changes, the BLM would retain discretion to require performance bonds within the specific limits established in the regulations, and would determine the amount of bond required on a case-by-case basis after site-specific analysis. These changes are being proposed to account for estimated inflation, since the rule was established in 1970 when the amount of material covered by the bond was four to five times the amount of material covered at current prices. For example, three to five truckloads of timber might have been sold for $2,500 in 1970, whereas, at current dollar valuation, a single truckload of the same quality timber might exceed the threshold for the bonding requirement. This change would adjust the BLM's risk exposure to a level that is similar to when the bond threshold in the current regulations was originally published.

The BLM is also proposing changes to § 5473.4 that would allow the authorized officer to grant a purchaser's request to extend the amount of operating time on a timber sale contract without reappraisal. The proposed revision to § 5473.4(c) adds unusual weather conditions to the list of reasons the BLM may grant a request for a contract extension. It is the BLM's experience that some pause in operations occurs due to normal weather, such as a halt in log hauling during heavy rain events or a shutdown of yarding due to wet soils during spring melt, which would not amount to unusual weather conditions. Unusual weather conditions could be record drought leading to prolonged fire hazard or record rainfall leading to prolonged wet soil conditions.

Section 5473.4(d) also contains proposed criteria for contract extension related to fire and other natural and man-made disasters. The purpose of this proposed extension is to allow the BLM to extend contracts when a disaster results in significant salvage timber that needs to be harvested elsewhere. Timber impacted by a disaster often deteriorates rapidly and attracts insects and pathogens, and it is prudent that those sales be prioritized over sales that harvest live timber. The proposed revisions to this section would expand the BLM's authority to extend timber contracts in response to disasters on both Federal and non-Federal lands. The revision would also put a 36-month limit on the amount of time that a contract could be extended, which is not in the current regulations. The BLM recognizes that disasters can pose a serious hardship on local communities. The proposed changes would allow the BLM to extend the contract terms and provide additional time for a purchaser to harvest green timber in areas not impacted by the disaster, which could benefit businesses and land owners by allowing them to focus their resources on areas impacted by the disaster, including salvage removal.

Section 5500.0–5(e) (Definitions) would revise the definition of public lands to make it consistent with the definition in FLPMA at 43 U.S.C. 1702(e), and to clarify that for this part of the regulations O&C grant lands are considered public lands. Moreover, this section would clarify that there are conditions for the free use of vegetative and mineral materials on O&C grant lands.

Miscellaneous

Technical Note: The BLM is proposing changes to the authority sections to reflect that the O&C Act, which was previously codified at Title 43, Chapter 28, Subchapter V, (43 U.S.C. 1181a-j), was transferred to Title 43, Chapter 44, (43 U.S.C. 2601–2634) on July 1, 2017. The BLM is also proposing to remove Statute at Large citations that have already been codified.

IV. Procedural Matters

Regulatory Planning and Review (Executive Orders 12866 and 13563)

Executive Order (E.O.) 12866 provides that the Office of Information and Regulatory Affairs in the Office of Management and Budget will review all significant rules. The Office of Information and Regulatory Affairs has determined that this proposed rule is not significant.

E.O. 13563 reaffirms the principles of E.O. 12866 while calling for improvements in the nation's regulatory system to promote predictability, reduce uncertainty, and use the best, most innovative, and least burdensome tools for achieving regulatory ends. The E.O. directs agencies to consider regulatory approaches that reduce burdens and maintain flexibility and freedom of choice for the public where these approaches are relevant, feasible, and consistent with regulatory objectives. E.O. 13563 emphasizes further that regulations must be based on the best available science and that the rule making process must allow for public participation and an open exchange of ideas. We have developed this rule in a manner consistent with these requirements.

The BLM reviewed the requirements of the proposed rule and determined that it would not adversely affect in a material way the economy, a sector of the economy, productivity, competition, jobs, the environment, public health or safety, or State, local, or tribal governments or communities. For more detailed information, see the Regulatory Impact Analysis (''Economic and Threshold Analysis for Proposed Forest Management Rule'') (RIA) prepared for this proposed rule. The RIA has been posted in the docket for the proposed rule on the Federal eRulemaking Portal: *https://www.regulations.gov.* In the Searchbox, enter ''RIN 1004–AE61,'' click the ''Search'' button, open the Docket Folder, and look under Supporting Documents.

Reducing Regulation and Controlling Regulatory Costs (E.O. 13771)

The Office of Information and Regulatory Affairs has determined that

this proposed rule is not a significant regulatory action as defined in E.O. 12866. Therefore, the proposed rule is not an ''E.O. 13771 regulatory action'' as defined by Office of Management and Budget (OMB) guidance implementing E.O. 13771. As such, the proposed rule would not be subject to the requirement for ''regulatory actions'' under E.O. 13771.[1]

Regulatory Flexibility Act

This proposed rule would not have a significant economic effect on a substantial number of small entities under the Regulatory Flexibility Act (5 U.S.C. 601 *et seq.*) (RFA). The RFA generally requires that Federal agencies prepare a regulatory flexibility analysis for rules subject to the notice-and-comment rulemaking requirements under the Administrative Procedure Act (5 U.S.C. 500 *et seq.*), if the rule would have a significant economic impact, whether detrimental or beneficial, on a substantial number of small entities. *See* 5 U.S.C. 601–612. Congress enacted the RFA to ensure that government regulations do not unnecessarily or disproportionately burden small entities. Small entities include small businesses, small governmental jurisdictions, and small not-for-profit enterprises.

The Small Business Administration (SBA) has developed size standards to carry out the purposes of the Small Business Act, which can be found in 13 CFR 121.201. For a specific industry identified by the North American Industry Classification System (NAICS), small entities are defined by the SBA as an individual, limited partnership, or small company considered at ''arm's length'' from the control of any parent company, which meet certain size standards. The size standards are expressed either in number of employees or annual receipts. The proposed rule would most likely affect entities that participate in timber sales or the related protest process. The industries most likely to be directly affected are listed in the table below along with the relevant SBA size standards.

Industry	Size standards in millions of dollars	Size standards in number of employees
Timber Tract Operations	$11.0	
Forest Nurseries and Gathering of Forest Products	11.0	
Logging		500
Support Activities for Forestry	7.5	
Environmental Consulting Services	15.0	
Environment, Conservation and Wildlife Organizations	15.0	

BLM timber sales are commonly bid on by, and awarded to, small businesses. The BLM is also required by the SBA regulations (13 CFR part 121) to set aside a proportion of BLM timber sales for small businesses. The proposed regulations would not change this process. Four changes in the proposed rule to subparts 5422, 5441, 5451, and 5463 would have small beneficial economic effects to small businesses by lowering financial requirements to enter into a sale contract and by providing more flexibility in the timber sale contract. Section 5441.1–2 refers to a SBA road construction loan program that has expired, and therefore the deletion of this section would have no effect. The proposed revisions to the forest management decision process should benefit small entities that elect to submit comments by more clearly defining the process.

For the purpose of carrying out its review pursuant to the RFA, the BLM believes that the proposed rule would not have a ''significant economic impact on a substantial number of small entities,'' as that phrase is used in 5 U.S.C. 605. An initial regulatory flexibility analysis is therefore not required.

Small Business Regulatory Enforcement Fairness Act (SBREFA)

This proposed rule is not a major rule under 5 U.S.C. 804(2), the Small Business Regulatory Enforcement Fairness Act. This rule:

(a) Does not have an annual effect on the economy of $100 million or more. The total appraised value of all timber offered by the BLM over the last five years is approximately $48 million per year. To the extent that the BLM can become more efficient and meet the increased timber volume offered when authorized in Resource Management Plans, this rule could have positive effects to the economy. Additional details can be found in the RIA for this rule.

(b) Will not cause a major increase in costs or prices for consumers, individual industries, Federal, State, or local government agencies, or geographic regions. The primary commodity affected by this rule is lumber. The BLM does not anticipate that a reduction in timber production would occur due to this proposed rule.

(c) Does not have significant adverse effects on competition, employment, investment, productivity, innovation, or the ability of U.S.-based enterprises to compete with foreign-based enterprises. The BLM believes this rule would result in positive effects in each of these areas. This proposed rule could have a small positive effect on competition by lowering the financial requirements for entering into a small sale contract. To the extent that the BLM can become more efficient and meet the increased timber volume authorized in Resource Management Plans, this rule could have positive effects on employment, investment, and productivity.

Unfunded Mandates Reform Act

This proposed rule would not impose an unfunded mandate on State, local, tribal governments, or the private sector of more than $100 million per year. The rule does not have a significant or unique effect on State, local, or tribal governments, or the private sector. This proposed rule would only affect the BLM's administrative process for protest of forest management decisions and provide minor revisions to enhance flexibility in developing and administering timber sales. A statement containing the information required by the Unfunded Mandates Reform Act (2 U.S.C. 1531 *et seq.*) is not required.

Takings (E.O. 12630)

This proposed rule would not effect a taking of private property or otherwise have taking implications under E.O. 12630. Section 2(a) of E.O. 12630

[1] Executive Office of the President, OMB Memorandum No. M–17–21, Guidance Implementing Executive Order 13771, Titled ''Reducing Regulation and Controlling Regulatory Costs,'' April 5, 2017.

identifies policies that do not have takings implications, such as those that abolish regulations, discontinue governmental programs, or modify regulations in a manner that lessens interference with the use of private property. There are no cases where a BLM timber sale or forest management decision has affected private property rights. The proposed rule would revise the timber sale and decision protest processes and would not affect private property rights. A takings implication assessment is not required.

Federalism (E.O. 13132)

Under the criteria in section 1 of E.O. 13132, this proposed rule would not have sufficient federalism implications to warrant the preparation of a federalism summary impact statement. It does not have substantial direct effects on the States, on the relationship between the national government and the States, or on the distribution of power and responsibilities among the various levels of government. The proposed rule would revise processes that have been implemented numerous times over decades and which have not been found to have effects on the relationship or distribution of power between the national government and the States.

Civil Justice Reform (E.O. 12988)

This proposed rule complies with the requirements of E.O. 12988. Specifically, this rule:

(a) Meets the criteria of section 3(a) requiring that all regulations be reviewed to eliminate errors and ambiguity and be written to minimize litigation; and

(b) Meets the criteria of section 3(b)(2) requiring that all regulations be written in clear language and contain clear legal standards.

Consultation With Indian Tribes (E.O. 13175 and Departmental Policy)

The Department of the Interior strives to strengthen its government to-government relationship with Indian tribes through a commitment to consultation with Indian tribes and recognition of their right to self-governance and tribal sovereignty. We have evaluated this rule under the Department's consultation policy and under the criteria in E.O. 13175 and have determined that it has no substantial direct effects on federally recognized Indian tribes and that consultation under the Department's tribal consultation policy is not required. The BLM consults with tribes at multiple decision support stages, including development of Resource Management Plans, NEPA scoping, consultation under the National Historic Preservation Act, as well as in other circumstances identified in the BLM Tribal Consultation policy. Decisions affected by this proposed rule are included in all these decision support stages. The proposed rule would not affect these tribal consultation processes.

Paperwork Reduction Act (44 U.S.C. 3501 et seq.)

This proposed rule would revise existing information collections. All information collections require approval under the Paperwork Reduction Act of 1995 (44 U.S.C. 3501 *et seq.*). We may not conduct or sponsor and you are not required to respond to a collection of information unless it displays a currently valid Office of Management and Budget (OMB) control number. The OMB has reviewed and approved the information collection requirements associated with timber sales and forest management decision making processes under the following OMB control numbers:

- 1004–0058, ''Forest Management Decision Protest Process and Log Export and Substitution'' (expires 11/30/2022);
- 1004–0001, ''Free Use Application and Permit for Vegetative or Mineral Materials (43 CFR parts 3600, 3620, and 5510)'' (expires 01/31/2023); and,
- 0596–0085, ''Forest Products Removal Permits and Contracts'' (expires 12/31/2021).

OMB Control Number 1004–0058, as currently approved, authorizes the collection of information that assists the BLM in enforcing export and substitution prohibitions. This Control Number also provides the public an opportunity to comment on a proposed forest management decision. At present, control number 1004–0058 authorizes four IC activities. Three of these activities assist the BLM in enforcing statutory prohibitions against:

- The export of unprocessed timber harvested from Federal lands; and
- The use of Federal timber in processing facilities while exporting non-Federal unprocessed timber that could have been used in those facilities (*i.e.,* substitution).

The fourth IC activity in this control number provides a process for persons to comment on proposed forest management decisions.

Proposed revisions to § 5003.3 are intended to clarify when comments must be received and to improve the process by providing more instruction to the public about how to comment on proposed forest management decisions and by providing for the submission of comments electronically or by other means rather than exclusively by mail, as is currently required for protests. Proposed revisions to § 5424.1 would update that regulation in accordance with statutory amendments. The proposed revisions to § 5003.3 and § 5424.1, explained in more detail below, would not change our previously approved burden estimates under OMB Control Number 1004–0058, but they do require approval by OMB:

(1) Proposed revisions to § 5003 would remove the current protest process and replace it with a public comment process as described below:

(a) Section 5003.3(a) currently authorizes protests of a forest management decision to be filed within 15 days of the publication of a notice of decision or notice of sale in a newspaper of general circulation. A proposed revision of that provision would change the 15-day deadline for submitting protests to a discretionary 10-day public comment period for a proposed decision and clarify when comments on a proposed decision must be received.

(b) Proposed § 5003.3(b) would require comments to be substantive and allow the authorized officer to disregard non-substantive comments or a repeat of comments already submitted during an environmental-review process.

(c) Proposed § 5003.3(c) would provide that the BLM shall not consider comments on a proposed decision that are not timely filed and would allow comments on a proposed decision to be filed via regular mail, fax, hand-delivery, express delivery, messenger service, or be posted electronically to an agency website, if available.

(d) Proposed § 5003.3(d) would allow a proposed decision to become final upon expiration of the 10-day comment period if no comments are received.

(e) Proposed § 5003.3(e) would allow the authorized officer, at the conclusion of his/her review of submitted comments, to include any responses to comments in the final decision document.

(f) Proposed § 5003.3(f) includes a new provision that would require a final forest management decision to provide instructions to the public describing the process for submitting an appeal under 43 CFR part 4.

(2) Proposed revisions to § 5424.1(a)(1) and (2) update the reporting requirement for purchasers and affiliates to report the export of private timber from within 1 year to 2 years.

Title: Forest Management Decision Protest Process and Log Export and Substitution.

OMB Control Number: 1004–0058.

Form Numbers: 5450–17, 5460–15, and 5460–17.

Type of Review: Revision of a currently approved collection.

Description of Respondents: Purchasers of Federal timber, their affiliates, and any person who wishes to comment on a proposed BLM forest management decision.

Estimated Number of Annual Respondents: 325.

Estimated Number of Responses: 325.

Estimated Completion Time per Response: Completion time varies between 100 hours and 250 hours, depending on activity.

Estimated Total Annual Burden Hours: 550.

Respondents' Obligation: Required to obtain or retain a benefit.

Frequency of Collection: On occasion.

Estimated Total Non-Hour Cost: $0.

As part of our continuing effort to reduce paperwork and respondent burdens, we invite the public and other Federal agencies to comment on any aspect of this information collection, including:

(1) Whether or not the collection of information is necessary for the proper performance of the functions of the agency, including whether or not the information will have practical utility;

(2) The accuracy of our estimate of the burden for this collection of information, including the validity of the methodology and assumptions used;

(3) Ways to enhance the quality, utility, and clarity of the information to be collected; and

(4) Ways to minimize the burden of the collection of information on those who are to respond, including through the use of appropriate automated, electronic, mechanical, or other technological collection techniques or other forms of information technology, *e.g.,* permitting electronic submission of response.

Written comments and recommendations for the proposed information collection should be sent within 30 days of publication of this notice to *www.reginfo.gov/public/do/PRAMain.* Find this particular information collection by selecting ''Currently under 30-day Review—Open for Public Comments'' or by using the search function. Please provide a copy of your comments to Faith Bremner, Senior Regulatory Analyst, Bureau of Land Management, Mail Stop 2134 LM, 1849 C Street NW, Washington, DC 20240; or by email to *fbremner@blm.gov.* Please reference OMB Control Number 1004–AE61in the subject line of your comments.

National Environmental Policy Act

The BLM does not believe this rule would constitute a major Federal action significantly affecting the quality of the human environment, and has prepared preliminary documentation to this effect, explaining that a detailed statement under the National Environmental Policy Act (NEPA) would not be required because the rule is categorically excluded from NEPA review. This rule would be excluded from the requirement to prepare a detailed statement because, as proposed, it would be a regulation entirely procedural in nature. (For further information see 43 CFR 46.210(i)). We have also determined, as a preliminary matter, that the rule does not involve any of the extraordinary circumstances listed in 43 CFR 46.215 that would require further analysis under NEPA.

Documentation of the proposed reliance upon a categorical exclusion has been prepared and is available for public review with the other supporting documents for this proposed rule.

Effects on the Energy Supply (E.O. 13211)

This rule is not a significant energy action under the definition in E.O. 13211. A Statement of Energy Effects is not required.

Clarity of This Regulation

We are required by E.O. 12866 (section 1(b)(12)), 12988 (section 3(b)(1)(B)), and 13563 (section 1(a)), and by the Presidential Memorandum of June 1, 1998, to write all rules in plain language. This means that each rule we publish must:

(a) Be logically organized;

(b) Use the active voice to address readers directly;

(c) Use common, everyday words and clear language rather than jargon;

(d) Be divided into short sections and sentences; and

(e) Use lists and tables wherever possible.

If you believe that we have not met these requirements, send us comments by one of the methods listed in the **ADDRESSES** section. To better help us revise the rule, your comments should be as specific as possible. For example, you should tell us the numbers of the sections or paragraphs that you find unclear, which sections or sentences are too long, the sections where you feel lists or tables would be useful, etc.

Author

The principal authors of this rule are: Wade Salverson and Christian Schumacher, Division of Forest, Range, Riparian, and Plant Conservation; Jennifer Noe, Division of Regulatory Affairs; assisted by the Office of the Solicitor.

List of Subjects

43 CFR Part 5000

Administrative practice and procedure, Forests and forest products, Public lands.

43 CFR Part 5400

Administrative practice and procedure, Forests and forest products, Public lands, Reporting and recordkeeping requirements.

43 CFR Part 5420

Forests and forest products, Government contracts, Public lands, Reporting and recordkeeping requirements.

43 CFR Part 5440

Forests and forest products, Government contracts, Public lands, Reporting and recordkeeping requirements.

43 CFR Part 5450

Forests and forest products, Government contracts, Public lands, Reporting and recordkeeping requirements.

Surety bonds

43 CFR Part 5460

Forests and forest products, Government contracts, Public lands.

43 CFR Part 5470

Forests and forest products, Government contracts, Public lands, Reporting and recordkeeping requirements.

43 CFR Part 5500

Forests and forest products, Public lands.

Casey Hammond,

Principal Deputy Assistant Secretary—Land and Minerals Management, Exercising the Authority of the Assistant Secretary—Land and Minerals Management.

43 CFR Chapter II

For the reasons set out in the preamble, the Bureau of Land Management proposes to amend 43 CFR parts 5000, 5400, 5410, 5420, 5430, 5440, 5450, 5460, 5470, and 5500 as follows:

PART 5000—ADMINISTRATION OF FOREST MANAGEMENT DECISIONS

■ 1. Revise part 5000 to read as follows:

Sec.
5003.1 Effect of decisions; general.

5003.2 Notice of forest management decisions.
5003.3 [Reserved]
5003.4 Definitions: general.

Authority: 43 U.S.C. 2601; 30 U.S.C. 601 *et seq.;* 43 U.S.C. 1701.

§ 5003.1 Effect of decisions; general.

Notwithstanding the provisions of 43 CFR 4.21(a),

(a) The authorized officer may make a forest management decision, as described in § 5003.2, effective immediately or on a date established in the decision. The filing of a petition for a stay pending appeal under 43 CFR part 4 shall not automatically suspend the effect of a forest management decision issued under § 5003.2.

(b) Where the BLM determines that vegetation, soil, or other resources on the public lands are at substantial risk of wildfire due to drought, fuels buildup, or other reasons, or at immediate risk of erosion or other damage due to wildfire, BLM may make a wildfire management decision made under this part and parts 5400 through 5510 of this subchapter effective immediately or on a date established in the decision. Wildfire management includes but is not limited to:

(1) Fuel reduction or fuel treatment such as prescribed burns and mechanical, chemical, and biological thinning methods (with or without removal of thinned materials); and

(2) Projects to stabilize and rehabilitate lands affected by wildfire.

(c) The Interior Board of Land Appeals will issue a decision on the merits of an appeal of a wildfire management decision under paragraph (b) of this section within the time limits prescribed in 43 CFR 4.416.

§ 5003.2 Notice of forest management decisions.

(a) The BLM authorizes forest management activities, which are defined in § 5003.4, by issuing forest management decisions. Forest management decisions shall be posted on a designated agency website while also:

(1) Publishing a notice in a newspaper of general circulation in the area;

(2) Sending a notice by direct or electronic mail to a list of parties requesting direct notification; or

(3) Broadcasting a notice on one or more mass-media platforms.

(b) The posting date of the final forest management decision on the agency website establishes the official date of the decision for purposes of an appeal under 43 CFR part 4.

§ 5003.3 [Reserved]

§ 5003.4 Definitions: general.

Forest management activity generally means activities with a silvicultural or forest protection objective including associated actions needed to carry out the silvicultural or forest protection objective, such as construction and maintenance of roads and improvements.

PART 5400—SALES OF FOREST PRODUCTS; GENERAL

■ 2. The authority citation for part 5400 is revised to read as follows:

Authority: 30 U.S.C. 601 *et seq.,* 43 U.S.C. 315, 2601, 16 U.S.C. 607a, and 43 U.S.C. 1701 *et seq.*

■ 3. Amend § 5400.0–3 by revising paragraphs (a) and (c) to read as follows:

§ 5400.0–3 Authority.

(a) The Act of August 28, 1937 (43 U.S.C. 2601) authorizes the sale of timber from the Revested Oregon and California Railroad and Reconveyed Coos Bay Wagon Road Grant Lands and directs that such lands shall be managed for permanent forest production and the timber thereon sold, cut and removed in conformity with the principle of sustained yield for the purpose of providing a permanent source of timber supply, protecting watersheds, regulating streamflow and contributing to the economic stability of local communities and industries, and providing recreational facilities.

* * * * *

(c) Public Law 101–382 (104 Stat. 714) Forest Resources Conservation and Shortage Relief Act of 1990 (16 U.S.C. 620) Restrictions on exports of unprocessed timber originating from Federal lands.

* * * * *

■ 4. Amend § 5400.0–5 by adding the definitions for ''Export,'' ''Lump sum,'' ''Scale sale,'' and ''Sourcing area'' in alphabetical order and revising the definitions of ''Fair Market value'', ''Substitution,'' and ''Third party scaling,'' to read as follows:

§ 5400.0–5 Definitions.

* * * * *

Export means the transporting or causing to be transported, either directly or through another party, unprocessed timber to a foreign country. Export occurs on the date that a person enters into an agreement to sell, trade, or otherwise convey such timber to a person for delivery to a foreign country. If the date in the preceding sentence cannot be established, export occurs when unprocessed timber is placed in an export facility for preparation, including but not limited to, sorting or bundling, and container loading, for shipment outside the United States, or when unprocessed timber is placed on board an oceangoing vessel, rail car, or other conveyance destined for a foreign country, port, or facility.

Fair Market value means the price forest products will return when offered for competitive sale on the open market.

* * * * *

Lump-sum means a sale where the total quantity of forest product that is designated for removal is estimated and established prior to the sale.

* * * * *

Scale sale means a sale where the total quantity of forest product that is designated for removal is determined after cutting, but before its conversion or end use.

* * * * *

Sourcing area means a geographic area approved by the Secretary of the Interior where prohibitions for direct and indirect substitution shall not apply with respect to the acquisition of unprocessed timber originating from Federal lands west of the 100th meridian in the contiguous 48 States by a person who, in the previous 24 months, has not exported unprocessed timber originating from private lands within the sourcing area; and during the period in which such approval is in effect, does not export unprocessed timber originating from private lands within the sourcing area.

Substitution means:

(1) The purchase of a greater volume of Federal timber by an individual purchaser than has been his historic pattern within twenty-four (24) months of the sale of export by the same purchaser of a greater volume of his private timber than has been his historic pattern during the preceding twenty-four (24) months; and

(2) The increase of both the purchase of Federal timber and export of timber from private lands tributary to the plant for which Bureau of Land Management timber covered by a specific contract is delivered or expected to be delivered.

Third party scaling means the measurement of logs by a scaling organization or weight scale certified by a State, other than a Government agency, approved by the Bureau.

* * * * *

■ 5. Amend § 5402.0–6 by revising paragraph (d), adding paragraph (e), and removing the parenthetical authority citation at the end of the section to read as follows:

§ 5402.0–6 Policy.

* * * * *

(d) All negotiated sales shall be subject to the restrictions relating to the export and substitution from the United States of unprocessed timber.

(e) Special forest products, including firewood, Christmas trees, boughs, greenery, mushrooms and other similar vegetative resources, may be sold by permit, without appraisal, after payment to the government of adequate compensation for the material and may include the expense of issuance of the permit.

PART 5410—ANNUAL TIMBER SALE PLAN

■ 6. The authority citation for part 5410 is revised to read as follows:

Authority: 30 U.S.C. 601 *et seq.;* 43 U.S.C. 2604.

■ 7. Revise § 5410.0–6 to read as follows:

§ 5410.0–6 Policy.

Plans for the sale of timber from the O. and C. and public lands will be developed annually. Suggestions from prospective purchasers of such timber may be received to assist in the development of a sound annual timber sale plan. Such plan may be advertised in a newspaper of general circulation in the area in which the timber is located or an agency website. Such advertisement shall indicate generally the probable time when the various tracts of timber included in the plan will be offered for sale, set-asides if any, and the probable location and anticipated volumes of such tracts. The authorized officer may subsequently change, alter or amend the annual timber sale plan.

PART 5420—PREPARATION FOR SALE

■ 8. The authority citation for part 5420 is revised to read as follows:

Authority: 30 U.S.C. 601 *et seq.;* 43 U.S.C. 2604.

■ 9. Revise § 5420.0–6 to read as follows:

§ 5420.0–6 Policy.

All timber or other vegetative resources to be sold, except materials that qualify under § 5402.0–6(e) of this chapter, will be appraised to estimate fair market value. Measurement shall be by tree cruise, log scale, weight, or such other form of measurement as may be determined to be in the public interest.

■ 10. Revise § 5422.1 to read as follows:

§ 5422.1 Lump-sum sales.

As the general practice, the Bureau will estimate volume for a lump-sum sale using a tree cruise basis.

■ 11. Revise § 5422.2 to read as follows:

§ 5422.2 Scale sales.

(a) Scaling will be performed by the BLM or third party scaling organization approved by the BLM or any operator of a State-certified weight scale.

(b) The BLM may also order third party scaling for administrative reasons. Such reasons would include, but are not limited to, the following: To improve cruising standards, to check accuracy of cruising practices, and for volumetric analysis.

■ 12. Amend § 5424.0–6 by revising paragraph (d) to read as follows:

§ 5424.0–6 Policy.

* * * * *

(d) The contract or permit form and any additional provisions shall be made available for inspection by prospective bidders during the advertising period. When sales are negotiated, all additional provisions shall be made part of the contract or permit.

* * * * *

■ 13. Amend § 5424.1 by revising paragraphs (a)(1) and (2) to read as follows:

§ 5424.1 Reporting provisions for substitution determination.

(a) * * *

(1) A purchaser who has exported private timber within two years preceding the purchase date of Federal timber; and/or

(2) An affiliate of a timber purchaser who exported private timber within two years before the acquisition of Federal timber from the purchaser.

* * * * *

PART 5430—ADVERTISEMENT

Subpart 5430—Advertisement; General

■ 14. The authority citation for subpart 5430, is revised to read as follows:

Authority: 43 U.S.C. 2604, 30 U.S.C. 601 *et seq.*

■ 15. Revise § 5430.0–6 to read as follows:

§ 5430.0–6 Policy.

Competitive timber sales shall be advertised in a newspaper of general circulation or agency website in the area in which the timber or other vegetative resources are located and a notice of the sale shall be posted in a conspicuous place in the office where bids are to be submitted. Such advertisement shall be published on the same day once a week for two consecutive weeks, except that sales amounting to less than 500 M board feet, need be published once only. When in the discretion of the authorized officer longer advertising periods are desired, such longer periods are permitted.

PART 5440—CONDUCT OF SALES

■ 16. The authority citation for part 5440 is revised to read as follows:

Authority: 43 U.S.C. 2604, 30 U.S.C. 601 *et seq.*

■ 17. Amend § 5441.1 by revising paragraph (c) to read as follows:

§ 5441.1 Qualification of bidders.

* * * * *

(c) Timber sale contracts are ''covered transactions'' under the suspension and debarment rules for discretionary assistance, loan, and benefit award programs at 2 CFR part 180, implemented as a regulation by the Department at 2 CFR part 1400. See 2 CFR 180.200, 180.210, and 1400.970.

(1) A bidder or purchaser that has been suspended, debarred or otherwise determined to be ineligible for award is prohibited from bidding on a timber sale unless an award specific written compelling reasons exception determination pursuant to 2 CFR 180.135 and 1400.137 is issued by the Department's Director, Office of Acquisition and Property Management to permit an excluded party to participate in the covered transaction.

(2) A bidder or purchaser suspended, debarred or otherwise award ineligible may continue to bid on timber purchase contracts; however, absent issuance of a written compelling reasons determination under paragraph (c)(1) of this section, no award shall be made during the period of award ineligibility.

(3) As required by 2 CFR 180.335, prior to awarding a timber sale contract, a bidder or purchaser (*i.e.,* a nonprocurement award participant) shall certify to BLM that neither the entity nor any of its principals, as defined at 2 CFR 180.995, is suspended, debarred, or otherwise disqualified.

(4) If a participant enters into a covered transaction with another person at the next lower tier, the participant must verify that the person with whom they intend to enter into that transaction is not suspended, debarred, or otherwise award disqualified. See 2 CFR 180.300 and 1400.220.

■ 18. Revise § 5441.1–1 to read as follows:

§ 5441.1–1 Bid deposits.

Sealed bids shall be accompanied by a deposit of not less than 10 percent of

the appraised value of the timber or other vegetative resources. For offerings at oral auction, bidders shall make a deposit of not less than 10 percent of the appraised value prior to the opening of the bidding. The authorized officer may, in his or her discretion, require larger deposits. Deposits may be in the form of cash, money orders, bank drafts, cashiers or certified checks made payable to the Bureau of Land Management, or bid bonds of a corporate surety shown on the approved list of the United States Treasury Department or any guaranteed remittance approved by the authorized officer. Upon conclusion of the bidding, the bid deposits of all bidders, except the high bidder, will be returned. The deposit of the successful bidder will be applied to the purchase price at the time the contract is signed by the authorized officer unless the deposit is a corporate surety bid bond, in which case the surety bond will be returned to the purchaser. If the BLM fails to award the timber sale within 90 days of the determination of the high bidder, a portion of the bid deposit may be refunded to the high bidder upon written request to the authorized officer, such that the BLM retains a deposit of at least 5% of the appraised value. The remainder of the full bid deposit must be resubmitted to the BLM once the high bidder is notified in writing that the delay of award has been remedied and the authorized officer is prepared to issue the contract. If the high bidder is unable to provide the full amount of the bid deposit within 30 days of the written notification, the sale will be re-auctioned and the high bidder will be barred from participating in any subsequent auctions for the same tracts.

§ 5441.1–2 [Removed]

■ 19. Remove § 5441.1–2.

§ 5441.1–3 [Redesignated as § 5441.1–2]

■ 20. Redesignate § 5441.1–3 as § 5441.1–2.

PART 5450—AWARD OF CONTRACT

■ 21. The authority citation for part 5450 is revised to read as follows:

Authority: 43 U.S.C. 2604; 30 U.S.C. 601 *et seq.*

■ 22. Amend § 5451.1 by revising paragraph (a) introductory text to read as follows:

§ 5451.1 Minimum performance bond requirements; types.

(a) A minimum performance bond of not less than 20 percent of the total contract price shall be required for all contracts of $10,000 or more, but the amount of the bond shall not be in excess of $500,000, except when the purchaser opts to increase the minimum bond as provided in § 5451.2. A minimum performance bond of not less than $500 or 20% of the contract price, whichever is greater, will be required for all installment contracts less than $10,000. For cash sales less than $10,000, bond requirements, if any, will be at the discretion of the authorized officer. The performance bond may be:

* * * * *

PART 5460—SALES ADMINISTRATION

■ 23. The authority citation for part 5460 is revised to read as follows:

Authority: 30 U.S.C. 601 *et seq.,* 43 U.S.C. 2604.

■ 24. Revise § 5461.3 to read as follows:

§ 5461.3 Total payment.

The total amount of the contract purchase price must be paid prior to expiration of the time for cutting and removal under the contract. For a lump sum sale, the purchaser shall not be entitled to a refund even though the amount of timber cut, removed, or designated for cutting may be less than the estimated total volume shown in the contract. For a scale sale, if it is determined after all designated timber has been cut and measured that the total payments made under the contract exceed the total sale value of the timber measured, such excess shall be refunded to the purchaser within 60 days after such determination is made.

PART 5470—CONTRACT MODIFICATION—EXTENSION—ASSIGNMENT

■ 25. The authority citation for part 5470 is revised to read as follows:

Authority: 30 U.S.C. 601; 43 U.S.C. 2604 and 1740.

■ 26. Amend § 5473.4 by:
■ a. Removing the word ''or'' at the end of paragraph (c)(4);
■ b. Revising paragraph (c)(5);
■ c. Adding paragraph (c)(6); and
■ d. Revising paragraph (d).

The revisions and addition read as follows:

§ 5473.4 Approval of request.

* * * * *

(c) * * *

(5) Closure of operations by BLM or State fire protection agencies due to fire danger; or

(6) Closure of operations due to unusual weather, where the BLM restricted operations during periods with specific environmental conditions, including but not limited to restrictions for low soil moisture, sustained dry periods, frozen soils, or operations requiring snow cover of specific depth.

(d) Upon written request of the purchaser, the State Director may extend a contract to harvest green timber to allow that purchaser to harvest timber as salvage from other Federal or non-Federal lands that have been damaged by fire or other natural or man-made disaster. The duration of the extension shall not exceed the time necessary to meet the salvage objectives, or a maximum of 36 months. The State Director may also waive reappraisal for such extension.

PART 5500—NONSALE DISPOSALS; GENERAL

Subpart 5500—Nonsale Disposals; General

■ 27. The authority citation for part 5500, subpart 5500, continues to read as follows:

Authority: 30 U.S.C. 601 *et seq.,* 43 U.S.C. 315, 423.

■ 28. Amend § 5500.0–5 by revising paragraph (e) to read as follows:

§ 5500.0–5 Definitions.

* * * * *

(e) *Public Lands* means any land and interest in land owned by the United States within the several States and administered by the Secretary of the Interior through the Bureau of Land Management including O. and C. Lands, without regard to how the United States acquired ownership, except:

(1) Lands located on the Outer Continental Shelf; and

(2) Lands held for the benefit of Indians, Aleuts, and Eskimos.

* * * * *

[FR Doc. 2020–12123 Filed 6–5–20; 8:45 am]

BILLING CODE 4310–84–P

Notices

Federal Register
Vol. 85, No. 110
Monday, June 8, 2020

This section of the FEDERAL REGISTER contains documents other than rules or proposed rules that are applicable to the public. Notices of hearings and investigations, committee meetings, agency decisions and rulings, delegations of authority, filing of petitions and applications and agency statements of organization and functions are examples of documents appearing in this section.

DEPARTMENT OF AGRICULTURE

Forest Service

Collaborative Forest Restoration Program Technical Advisory Panel

AGENCY: Forest Service, USDA.

ACTION: Notice of meeting.

SUMMARY: The Collaborative Forest Restoration Program Technical Advisory Panel (Panel) will hold a virtual meeting. The Panel is established consistent with the Federal Advisory Committee Act of 1972 (FACA), and Title VI of the Community Forest Restoration Act (the Act). Additional information concerning the Panel, including the meeting summary/minutes, can be found by visiting the Panel's website at: *http://www.fs.usda.gov/goto/r3/cfrp.*

DATES: The meeting will be held on July 14–16, 2020 (Tuesday–Thursday), with meetings each day from 9:00 a.m. to 5:00 p.m.

All meetings are subject to cancellation. For status of meeting prior to attendance, please contact the person listed under **FOR FURTHER INFORMATION CONTACT.**

ADDRESSES: The meeting will be held with virtual attendance only. For virtual meeting information, please contact the person listed under the **FOR FURTHER INFORMATION CONTACT.**

Written comments may be submitted as described under **SUPPLEMENTARY INFORMATION**. All comments, including names and addresses when provided, are placed in the record and are available for public inspection and copying. The public may inspect comments received at USDA Forest Service Region 3 Regional Office. Please call ahead to facilitate entry into the building.

FOR FURTHER INFORMATION CONTACT: Ian Fox, Designated Federal Officer, by phone at 505–842–3425 or via email at *ian.fox@usda.gov.*

Individuals who use telecommunication devices for the deaf (TDD) may call the Federal Information Relay Service (FIRS) at 1–800–877–8339 between 8:00 a.m. and 8:00 p.m., Eastern Standard Time, Monday through Friday.

SUPPLEMENTARY INFORMATION: The purpose of the meeting is to:

(1) Review Panel Bylaws, Charter, and what it means to be a Federal Advisory Committee;

(2) Evaluate and score the 2019 and 2020 CFRP grant applications to determine which applications best meet the program objectives;

(3) Develop prioritized 2019 and 2020 CFRP project funding recommendations for the Secretary;

(4) Develop an agenda and identify members for the 2020 CFRP Sub-Committee for the review of multi-party monitoring reports from completed projects; and

(5) Discuss the proposal review process used by the Panel to identify what went well and what could be improved.

The meeting is open to the public. The agenda will include time for people to make oral statements of three minutes or less. Individuals wishing to make an oral statement should request in writing by June 8, 2020, to be scheduled on the agenda. Anyone who would like to bring related matters to the attention of the committee may file written statements with the committee staff before or after the meeting. Written comments and requests for time to make oral comments must be sent to Ian Fox, Designated Federal Officer, USDA Forest Service, Region 3 Regional Office, 333 Broadway Bouleveard Southwest, Albuqueque, New Mexico 87102; or by email to *ian.fox@usda.gov.*

Meeting Accommodations: If you are a person requiring reasonable accommodation, please make requests in advance for sign language interpreting, assistive listening devices, or other reasonable accommodation. For access to the facility or proceedings, please contact the person listed in the section titled **FOR FURTHER INFORMATION CONTACT.** All reasonable accommodation requests are managed on a case-by-case basis.

Dated: June 3, 2020.

Cikena Reid,

USDA Committee Management Officer.

[FR Doc. 2020–12349 Filed 6–5–20; 8:45 am]

BILLING CODE 3411–15–P

COMMISSION ON CIVIL RIGHTS

Notice of Public Meeting of the Massachusetts Advisory Committee

AGENCY: Commission on Civil Rights.

ACTION: Announcement of meeting.

SUMMARY: Notice is hereby given, pursuant to the provisions of the rules and regulations of the U.S. Commission on Civil Rights (Commission), and the Federal Advisory Committee Act (FACA), that a meeting of the Massachusetts Advisory Committee to the Commission will convene by conference call on Tuesday, June 23, 2020 at 12:00 p.m. (EDT). The purpose of the web conference is to hear from advocates and others on water issues in Massachusetts.

DATES: Tuesday, June 23, 2020 at 12:00 p.m. (EDT).

Public Call-In Information: 1–800–367–2403; conference ID: 1503627; to view the video portion, *https://cc.readytalk.com/r/a8xcvcm2ld60&eom.*

FOR FURTHER INFORMATION CONTACT: Evelyn Bohor at *ero@usccr.gov* or by phone at 202–376–7533.

SUPPLEMENTARY INFORMATION: Interested members of the public may listen to the discussion by calling the following toll-free conference call-in numbers: 1–800–367–2403; conference ID: 1503627. Please be advised that before placing them into the conference call, the conference call operator will ask callers to provide their names, their organizational affiliations (if any), and email addresses (so that callers may be notified of future meetings). Callers can expect to incur charges for calls they initiate over wireless lines, and the Commission will not refund any incurred charges. Callers will incur no charge for calls they initiate over land-line connections to the toll-free conference call-in number.

Persons with hearing impairments may also follow the discussion by first calling the Federal Relay Service at 1–800–877–8339 and providing the operator with the toll-free conference

call-in numbers: 1–800–367–2403; conference ID: 1503627.

Members of the public are invited to make statements during the open comment period of the meeting or submit written comments. The comments must be received in the regional office approximately 30 days after each scheduled meeting. Written comments may be emailed to Evelyn Bohor at *ero@usccr.gov.* Persons who desire additional information may contact the Eastern Regional Office at (202) 376–7533.

Records and documents discussed during the meeting will be available for public viewing as they become available at this FACA link, click the ''Meeting Details'' and ''Documents'' links. Records generated from this meeting may also be inspected and reproduced at the Eastern Regional Office, as they become available, both before and after the meetings. Persons interested in the work of this advisory committee are advised to go to the Commission's website, *www.usccr.gov,* or to contact the Eastern Regional Office at the above phone numbers, email or street address.

Agenda: Tuesday, June 23, 2020 at 12:00 p.m. (EDT)

1. Roll Call
2. Web Briefing on Water Project
3. Next Steps
4. Open Comment
5. Adjourn

Dated: June 3, 2020.

David Mussatt,

Supervisory Chief, Regional Programs Unit.

[FR Doc. 2020–12341 Filed 6–5–20; 8:45 am]

BILLING CODE P

DEPARTMENT OF COMMERCE

Office of the Secretary

Agency Information Collection Activities; Submission to the Office of Management and Budget (OMB) for Review and Approval; Comment Request; The Pledge to America's Workers Presidential Award Program

The Department of Commerce will submit the following information collection request to the Office of Management and Budget (OMB) for review and clearance in accordance with the Paperwork Reduction Act of 1995, on or after the date of publication of this notice. We invite the general public and other Federal agencies to comment on proposed, and continuing information collections, which helps us assess the impact of our information collection requirements and minimize the public's reporting burden. Public comments were previously requested via the **Federal Register** on March 31, 2020 (85 FR 17854) during a 60-day comment period. This notice allows for an additional 30 days for public comments.

Agency: National Institute of Standards and Technology, Commerce.

Title: The Pledge to America's Workers Presidential Award Program.

OMB Control Number: 0690–NEW.

Form Number(s): None.

Type of Request: Regular submission (new information collection).

Number of Respondents: 100 per year.

Average Hours per Response: 3 hours.

Annual Burden Hours: 1,000.

Needs and Uses: President Trump has outlined key workforce policy priorities through two Executive Orders. In June 2017, he signed the Presidential Executive Order 13801 Expanding Apprenticeships in America to ''provide more affordable pathways to secure, high paying jobs by promoting apprenticeships and effective workforce development programs.'' In July 2018, he signed the Executive Order 13845 Establishing the President's National Council for the American Worker as amended by Executive Order 13853 (83 FR 35099 as amended by 83 FR 65073), ''to work with private employers, educational institutions, labor unions, other non-profit organizations, and State, territorial, tribal, and local governments to update and reshape our education and job training landscape so that it better meets the needs of American students, workers, and businesses.'' The National Council is creating a national workforce strategy in accordance with the Trump Administration's workforce policy priorities and achievements.

In July 2018, President Trump also launched the Pledge to America's Workers, through which companies and trade groups commit to expanding programs that educate, train, and reskill American workers from high-school age to near-retirement. As of March 2020, more than 430 companies, trade associations, and unions have signed the Pledge, contributing to over 15.8 million new education and training opportunities for American students and workers over the next five years.

The Department of Commerce through the National Institute of Standards and Technology's Baldrige Performance Excellence program is creating a new Presidential Award to recognize demonstrated excellence in implementing the Pledge to America's Workers. This program fulfills the requirements of both Executive Orders, each of which called for the creation of programs to recognize excellence in employer training investments. The Department of Commerce will administer the award program, with support from the Department of Labor, on behalf of the National Council for the American Worker.

Affected Public: Business or other for-profit organizations.

Frequency: Annually.

Respondent's Obligation: Voluntary.

This information collection request may be viewed at *www.reginfo.gov.* Follow the instructions to view the Department of Commerce collections currently under review by OMB.

Written comments and recommendations for the proposed information collection should be submitted within 30 days of the publication of this notice on the following website *www.reginfo.gov/public/do/PRAMain.* Find this particular information collection by selecting ''Currently under 30-day Review—Open for Public Comments'' or by using the search function and entering the title of the collection.

Sheleen Dumas,

Department PRA Clearance Officer, Office of the Chief Information Officer, Commerce Department.

[FR Doc. 2020–12348 Filed 6–5–20; 8:45 am]

BILLING CODE 3510–13–P

DEPARTMENT OF COMMERCE

International Trade Administration

[C–570–942]

Certain Kitchen Appliance Shelving and Racks From the People's Republic of China: Final Results of the Expedited Second Sunset Review of the Countervailing Duty Order

AGENCY: Enforcement and Compliance, International Trade Administration, Department of Commerce.

SUMMARY: The Department of Commerce (Commerce) finds that revocation of the countervailing duty (CVD) order on certain kitchen appliance shelving and racks (kitchen racks) from the People's Republic of China (China) would be likely to lead to continuation or recurrence of countervailing subsidies at the levels indicated in the ''Final Results of Sunset Review'' section of this notice.

DATES: Applicable June 8, 2020.

FOR FURTHER INFORMATION CONTACT: Rachel Greenberg AD/CVD Operations, Office V, Enforcement and Compliance, International Trade Administration, U.S. Department of Commerce, 14th Street and Constitution Avenue NW,

Washington, DC 20230; telephone: (202) 482–3053.

SUPPLEMENTARY INFORMATION:

Background

On September 14, 2009, Commerce published in the **Federal Register** the CVD order on kitchen racks from China.[1] On February 3, 2020, Commerce published the notice of initiation of the second sunset review of the *Order,* pursuant to section 751(c) of the Tariff Act of 1930, as amended (the Act).[2] On February 14, 2020, Commerce received a timely-filed notice of intent to participate from Nashville Wire Products, Inc. and SSW Holding Company, LLC (collectively, the domestic interested parties), within the deadline specified in 19 CFR 351.218(d)(1)(i).[3] The domestic interested parties claimed interested party status under section 771(9)(C) of the Act as producers of the domestic like product in the United States.

On March 4, 2020, Commerce received an adequate substantive response to the *Initiation Notice* from the domestic interested parties within the 30-day deadline specified in 19 CFR 351.218(d)(3)(i).[4] We received no substantive responses from any other interested parties, including the Government of China, nor was a hearing requested. On March 24, 2020, Commerce notified the U.S. International Trade Commission that it did not receive an adequate substantive response from respondent interested parties.[5] As a result, pursuant to section 751(c)(3)(B) of the Act and 19 CFR 351.218(e)(1)(ii)(B)–(C), Commerce conducted an expedited (120-day) sunset review of the *Order.*

Scope of the Order

The scope of this order consists of shelving and racks for refrigerators, freezers, combined refrigerator-freezers, other refrigerating or freezing equipment, cooking stoves, ranges, and ovens (''certain kitchen appliance shelving and racks'' or ''the subject merchandise''). Certain kitchen appliance shelving and racks are defined as shelving, baskets, racks (with or without extension slides, which are carbon or stainless steel hardware devices that are connected to shelving, baskets, or racks to enable sliding), side racks (which are welded wire support structures for oven racks that attach to the interior walls of an oven cavity that does not include support ribs as a design feature), and subframes (which are welded wire support structures that interface with formed support ribs inside an oven cavity to support oven rack assemblies utilizing extension slides) with the following dimensions:

—Shelving and racks with dimensions ranging from 3 inches by 5 inches by 0.10 inch to 28 inches by 34 inches by 6 inches; or

—Baskets with dimensions ranging from 2 inches by 4 inches by 3 inches to 28 inches by 34 inches by 16 inches; or

—Side racks from 6 inches by 8 inches by 0.10 inch to 16 inches by 30 inches by 4 inches; or

—Subframes from 6 inches by 10 inches by 0.10 inch to 28 inches by 34 inches by 6 inches.

The subject merchandise is comprised of carbon or stainless steel wire ranging in thickness from 0.050 inch to 0.500 inch and may include sheet metal of either carbon or stainless steel ranging in thickness from 0.020 inch to 0.20 inch. The subject merchandise may by coated or uncoated and may by formed and/or welded. Excluded from the scope of this order is shelving in which the support surface is glass.

The merchandise subject to this order is currently classified in the Harmonized Tariff Schedule of the United States (HTSUS) statistical reporting numbers 8418.99.8050, 8418.99.8060, 7321.90.5000, 7321.90.6090, 8516.90.8000, 8516.90.8010, 7321.90.6040, 8514.90.4000 and 8419.90.9520. Although the HTSUS subheadings are provided for convenience and customs purposes, the written description of the scope of this order is dispositive.

Analysis of Commerce Received

All issues raised in this sunset review are addressed in the accompanying Issues and Decision Memorandum,[6] which is hereby adopted by this notice. The issues discussed in the Issues and Decision Memorandum are the likelihood of continuation or recurrence of a countervailable subsidy and the net countervailable subsidy likely to prevail if the *Order* were revoked. The Issues and Decision Memorandum is a public document and is on file electronically via Enforcement and Compliance's Antidumping and Countervailing Duty Centralized Electronic Service System (ACCESS). ACCESS is available to registered users at *http://access.trade.gov.* In addition, a complete version of the Issues and Decision Memorandum can be accessed directly on the internet at *http://enforcement.trade.gov/frn/.* The signed and electronic versions of the Issues and Decision Memorandum are identical in content.

Final Results of Sunset Review

Pursuant to sections 751(c)(1) and 752(b) of the Act, Commerce determines that revocation of the *Order* would likely lead to continuation or recurrence of countervailable subsidy at the rates listed below.

Exporter/producer	Net subsidy rate (percent)
Guangdong Wire King Co., Ltd. (formerly known as Foshan Shunde Wireking Housewares & Hardware)	19.13
Asber Enterprises Co., Ltd. (China)	175.03
Changzhou Yixiong Metal Products Co., Ltd.	154.12
Foshan Winleader Metal Products Co., Ltd.	154.12
Kingsun Enterprises Group Co, Ltd.	154.12
Yuyao Hanjun Metal Work Co./Yuyao Hanjun Metal Products Co., Ltd.	154.12
Zhongshan Iwatani Co., Ltd.	154.12

[1] *See Certain Kitchen Appliance Shelving and Racks from the People's Republic of China: Countervailing Duty Order,* 74 FR 46973 (September 14, 2009) (*Order*).

[2] *See Initiation of Five-Year (Sunset) Reviews,* 85 FR 5940 (February 3, 2020) (*Initiation Notice*).

[3] *See* Domestic Interested Parties' Letter, ''Kitchen Appliance Shelving and Racks from the People's Republic of China—Domestic Interested Parties' Notice of Intent to Participate,'' dated February 14, 2020.

[4] *See* Domestic Interested Parties' Letter, ''Certain Kitchen Appliance Shelving and Racks from the People's Republic of China—Domestic Interested Parties' Substantive Response,'' dated March 4, 2020.

[5] *See* Commerce's Letter, ''Sunset Reviews Initiated on February 3, 2020,'' dated March 24, 2020.

[6] *See* Memorandum, ''Issues and Decision Memorandum for the Final Results of the Expedited Second Sunset Review of the Countervailing Duty Order on Certain Kitchen Appliance Shelving and Racks from the People's Republic of China,'' dated concurrently with this notice (Issues and Decision Memorandum).

Exporter/producer	Net subsidy rate (percent)
All Others	17.51

Administrative Protective Order (APO)

This notice serves as the only reminder to interested parties subject to an APO of their responsibility concerning the return or destruction of proprietary information disclosed under APO in accordance with 19 CFR 351.305. Timely notification of the return or destruction of APO materials or conversion to judicial protective order is hereby requested. Failure to comply with the regulations and terms of an APO is a violation which is subject to sanction.

Notification to Interested Parties

We are issuing and publishing these final results and notice in accordance with sections 751(c), 752(b), and 777(i)(1) of the Act and 19 CFR 351.218. Note that Commerce has temporarily modified certain of its requirements for serving documents containing business proprietary information, until July 17, 2020, unless extended.[7]

Dated: June 1, 2020.

Jeffrey I. Kessler,

Assistant Secretary for Enforcement and Compliance.

Appendix

List of Topics Discussed in the Issues and Decision Memorandum

I. Summary
II. Background
III. Scope of the Order
IV. History of the Order
V. Legal Framework
VI. Discussion of the Issues
1. Likelihood of Continuation or Recurrence of a Countervailable Subsidy
2. Net Countervailable Subsidy Rate Likely to Prevail
3. Nature of the Subsidies
VII. Final Results of Sunset Review
VIII. Recommendation

[FR Doc. 2020–12365 Filed 6–5–20; 8:45 am]

BILLING CODE 3510–DS–P

[7] *See Temporary Rule Modifying AD/CVD Service Requirements Due to COVID–19; Extension of Effective Period,* 85 FR 29615 (May 18, 2020).

DEPARTMENT OF COMMERCE

International Trade Administration

[A–570–941]

Certain Kitchen Appliance Shelving and Racks From the People's Republic of China: Final Results of the Expedited Second Sunset Review of the Antidumping Duty Order

AGENCY: Enforcement and Compliance, International Trade Administration, Department of Commerce.

SUMMARY: The Department of Commerce (Commerce) finds that revocation of the antidumping duty order on certain kitchen appliance shelving and racks from the People's Republic of China (China) would be likely to lead to continuation or recurrence of dumping at the levels indicated in the ''Final Results of Sunset Review'' section of this notice.

DATES: Applicable June 8, 2020.

FOR FURTHER INFORMATION CONTACT: Rachel Greenberg, AD/CVD Operations, Office V, Enforcement and Compliance, International Trade Administration, U.S. Department of Commerce, 14th Street and Constitution Avenue NW, Washington, DC 20230; telephone: (202) 482–0652.

SUPPLEMENTARY INFORMATION:

Background

On September 14, 2009, the Department of Commerce (Commerce) published the antidumping duty order on certain kitchen appliance shelving and racks from China.[1] On February 3, 2020, Commerce initiated the second sunset review of the *Order* pursuant to 751(c) of the Tariff Act of 1930, as amended (the Act).[2] Commerce received a notice of intent to participate from domestic interested parties, Nashville Wire Products, Inc. (Nashville Wire) and SSW Holding Company, LLC (SSW), within the deadline specified in 19 CFR 351.218(d)(1)(i).[3] Both Nashville Wire and SSW claimed interested party status under section 771(9)(C) of the Act as producers of the domestic like product. On March 4, 2020, Commerce received a substantive response from Nashville Wire and SSW within the 30-day deadline specified in 19 CFR 351.218(d)(3)(i).[4] Commerce received no substantive responses from respondent interested parties, nor was a hearing requested. On March 24, 2020, Commerce notified the U.S. International Trade Commission (ITC) that it did not receive an adequate substantive response from respondent interested parties.[5] As a result, pursuant to section 751(c)(3)(B) of the Act and 19 CFR 351.218(e)(1)(ii)(C)(2), Commerce conducted an expedited (120-day) sunset review of the *Order.*

Scope of the Order

The product covered by the *Order* consists of shelving and racks for refrigerators, freezers, combined refrigerator-freezers, other refrigerating or freezing equipment, cooking stoves, ranges, and ovens (''certain kitchen appliance shelving and racks'' or ''the merchandise under order''). Certain kitchen appliance shelving and racks are defined as shelving, baskets, racks (with or without extension slides, which are carbon or stainless steel hardware devices that are connected to shelving, baskets, or racks to enable sliding), side racks (which are welded wire support structures for oven racks that attach to the interior walls of an oven cavity that does not include support ribs as a design feature), and subframes (which are welded wire support structures that interface with formed support ribs inside an oven cavity to support oven rack assemblies utilizing extension slides) with the following dimensions:

—Shelving and racks with dimensions: ranging from 3 inches by 5 inches by 0.10 inch to 28 inches by 34 inches by 6 inches; or
—baskets with dimensions ranging from 2 inches by 4 inches by 3 inches to 28 inches by 34 inches by 16 inches; or

[1] *See Certain Kitchen Appliance Shelving and Racks from the People's Republic of China: Amended Final Determination of Sales at Less Than Fair Value and Notice of Antidumping Duty Order,* 74 FR 46971 (September 14, 2009) (*Order*).

[2] *See Initiation of Five-Year (Sunset) Reviews,* 85 FR 5940 (February 3, 2020).

[3] *See* Nashville Wire's and SSW's Letter, ''Kitchen Appliance Shelving and Racks from the People's Republic of China—Domestic Interested Parties' Notice of Intent to Participate,'' dated February 14, 2020.

[4] *See* Nashville Wire's and SSW's Letter, ''Certain Kitchen Appliance Shelving and Racks from the People's Republic of China—Domestic Interested Parties' Substantive Response,'' dated March 4, 2020.

[5] *See* Commerce's Letter, ''Sunset Reviews Initiated on February 3, 2020,'' dated March 24, 2020.

—side racks from 6 inches by 8 inches by 0.1 inch to 16 inches by 30 inches by 4 inches; or
—subframes from 6 inches by 10 inches by 0.1 inch to 28 inches by 34 inches by 6 inches.

The merchandise under order is comprised of carbon or stainless steel wire ranging in thickness from 0.050 inch to 0.500 inch and may include sheet metal of either carbon or stainless steel ranging in thickness from 0.020 inch to 0.2 inch. The merchandise under order may by coated or uncoated and may by formed and/or welded. Excluded from the scope of this order is shelving in which the support surface is glass.

The merchandise subject to this order is currently classified in the Harmonized Tariff Schedule of the United States (HTSUS) statistical reporting numbers 8418.99.8050, 8418.99.8060, 7321.90.5000, 7321.90.6090, 8516.90.8000, 8516.90.8010, 7321.90.6040, 8514.90.4000 and 8419.90.9520. Although the HTSUS subheadings are provided for convenience and customs purposes, the written description of the scope of this order is dispositive.

Analysis of Commerce Received

All issues raised in this review, including the likelihood of continuation or recurrence of dumping in the event of revocation and the magnitude of the margins likely to prevail if the order were revoked, are addressed in the accompanying Issues and Decision Memorandum. A list of topics discussed in the Issues and Decision Memorandum is included as an appendix to this notice. The Issues and Decision Memorandum is a public document and is on file electronically via Enforcement and Compliance's Antidumping and Countervailing Duty Centralized Electronic Service System (ACCESS). ACCESS is available to registered users at *http://access.trade.gov.* In addition, a complete version of the Issues and Decision Memorandum can be accessed directly at *http://enforcement.trade.gov/frn/.* The signed Issues and Decision Memorandum and the electronic version of the Issues and Decision Memorandum are identical in content.

Final Results of Sunset Review

Pursuant to sections 751(c)(1) and 752(c)(1) and (3) of the Act, Commerce determines that revocation of the antidumping duty order on certain kitchen appliance shelving and racks from China would likely lead to continuation or recurrence of dumping and that the magnitude of the margins is up to 95.99 percent.[6]

Administrative Protective Order (APO)

This notice serves as the only reminder to interested parties subject to an APO of their responsibility concerning the return or destruction of proprietary information disclosed under APO in accordance with 19 CFR 351.305. Timely notification of the return or destruction of APO materials or conversion to judicial protective order is hereby requested. Failure to comply with the regulations and terms of an APO is a violation which is subject to sanction.

Notification to Interested Parties

We are issuing and publishing these final results and notice in accordance with sections 751(c), 752(c), and 777(i)(1) of the Act and 19 CFR 351.218.

Dated: June 1, 2020.

Jeffrey I. Kessler,

Assistant Secretary for Enforcement and Compliance.

Appendix

List of Topics Discussed in the Issues and Decision Memorandum

I. Summary
II. Background
III. Scope of the Order
IV. History of the Order
V. Legal Framework
VI. Discussion of the Issues
  1. Likelihood of Continuation or Recurrence of Dumping
  2. Magnitude of the Margins Likely to Prevail
VII. Final Results of Sunset Review
VIII. Recommendation

[FR Doc. 2020–12262 Filed 6–5–20; 8:45 am]

BILLING CODE 3510–DS–P

[6] *See* Memorandum, ''Issues and Decision Memorandum for the Final Results of the Expedited Second Sunset Review of the Antidumping Duty Order on Certain Kitchen Appliance Shelving and Racks from the People's Republic of China,'' dated concurrently with this notice.

DEPARTMENT OF COMMERCE

International Trade Administration

[A–570–865]

Certain Hot-Rolled Carbon Steel Flat Products From the People's Republic of China: Rescission of Antidumping Duty Administrative Review; 2018–2019

AGENCY: Enforcement and Compliance, International Trade Administration, Department of Commerce.

SUMMARY: The Department of Commerce (Commerce) is rescinding the administrative review of the antidumping duty order on certain hot-rolled carbon steel flat products (hot-rolled steel) from the People's Republic of China (China) for the period of review (POR) November 1, 2018 through October 31, 2019.

DATES: Applicable June 8, 2020.

FOR FURTHER INFORMATION CONTACT: Matthew Renkey, AD/CVD Operations, Office V, Enforcement and Compliance, International Trade Administration, U.S. Department of Commerce, 1401 Constitution Avenue NW, Washington, DC 20230; telephone: (202) 482–2312.

SUPPLEMENTARY INFORMATION:

Background

On November 1, 2019, Commerce published a notice of opportunity to request an administrative review of the antidumping duty order on hot-rolled steel from China.[1] On January 17, 2020, pursuant to a request from interested parties,[2] Commerce initiated an administrative review with respect to 238 companies, in accordance with section 751(a) of the Tariff Act of 1930, as amended (the Act), and 19 CFR 351.213(b).[3] On April 16, 2020, the Domestic Interested Parties timely withdrew their request for an administrative review with respect to all of the companies for which a review had been requested.[4] No other party requested an administrative review.

Rescission of Review

Pursuant to 19 CFR 351.213(d)(1), Commerce will rescind an administrative review, in whole or in part, if the party that requested the review withdraws its request within 90 days of the publication date of the notice of initiation. The Domestic Interested Parties timely withdrew their review request for all companies within 90 days of the publication date of the *Initiation Notice.* No other party requested an administrative review of the order for this POR. Therefore, in accordance with 19 CFR 351.213(d)(1), we are rescinding this review, in its entirety.

[1] *See Antidumping or Countervailing Duty Order, Finding, or Suspended Investigation; Opportunity to Request Administrative Review,* 84 FR 58690 (November 1, 2019).

[2] The following parties requested the review: Nucor Corporation; AK Steel Corporation; ArcelorMittal USA LLC; United States Steel Corporation; California Steel Industries; SSAB Enterprises LLC; and Steel Dynamics, Inc. (Domestic Interested Parties).

[3] *See Initiation of Antidumping and Countervailing Duty Administrative Reviews,* 85 FR 3014 (January 17, 2020) (*Initiation Notice*).

[4] *See* Domestic Interested Parties' Letter, ''Withdrawal of Request for Administrative Review,'' dated April 16, 2020.

Assessment

Commerce will instruct U.S. Customs and Border Protection (CBP) to assess antidumping duties on all appropriate entries of hot-rolled steel from China. Antidumping duties shall be assessed at rates equal to the cash deposit rate of estimated antidumping duties required at the time of entry, or withdrawal from warehouse, for consumption, in accordance with 19 CFR 351.212(c)(1)(i). Commerce intends to issue appropriate assessment instructions to CBP 15 days after publication of this notice in the **Federal Register**.

Notification to Importers

This notice serves as the only reminder to importers whose entries will be liquidated as a result of this rescission notice, of their responsibility under 19 CFR 351.402(f)(2) to file a certificate regarding the reimbursement of antidumping duties prior to liquidation of the relevant entries during this review period. Failure to comply with this requirement could result in the presumption that reimbursement of the antidumping duties occurred and the subsequent assessment of double antidumping duties.

Notification Regarding Administrative Protective Order

This notice also serves as the only reminder to parties subject to administrative protective order (APO) of their responsibility concerning the disposition of proprietary information disclosed under APO in accordance with 19 CFR 351.305(a)(3). Timely written notification of the return or destruction of APO materials or conversion to judicial protective order is hereby requested. Failure to comply with the regulations and terms of an APO is a sanctionable violation.

Notification to Interested Parties

This notice is issued and published in accordance with sections 751 and 777(i)(1) of the Act and 19 CFR 351.213(d)(4).

Dated: June 1, 2020.

James Maeder,

Deputy Assistant Secretary for Antidumping and Countervailing Duty Operations.

[FR Doc. 2020–12323 Filed 6–5–20; 8:45 am]

BILLING CODE 3510–DS–P

DEPARTMENT OF COMMERCE

International Trade Administration

[A–201–844]

Steel Concrete Reinforcing Bar From Mexico: Final Affirmative Determination of Circumvention of the Antidumping Duty Order

AGENCY: Enforcement and Compliance, International Trade Administration, Department of Commerce.

SUMMARY: We determine that steel concrete reinforcing bar (rebar) from Mexico that is bent on one or both ends and otherwise meeting the description of in-scope merchandise—if produced and/or exported by Deacero S.A.P.I. de C.V. (Deacero) to the United States—is circumventing the antidumping duty order on rebar from Mexico.

DATES: Applicable June 8, 2020.

FOR FURTHER INFORMATION CONTACT: Jonathan Hall-Eastman, Office III, Antidumping and Countervailing Duty Operations, International Trade Administration, U.S. Department of Commerce, 1401 Constitution Avenue NW, Washington, DC 20230; telephone: (202) 482–1468.

SUPPLEMENTARY INFORMATION:

Background

On September 15, 2014, the Department of Commerce (Commerce) published the antidumping duty (AD) *Order* on rebar from Mexico.[1] On October 18, 2019, in response to a request from the Rebar Trade Action Coalition (the petitioner),[2] Commerce initiated a circumvention inquiry into whether imports of otherwise straight rebar bent on one or both ends (also referred to as hooked rebar) that is produced and/or exported to the United States by Deacero and otherwise meeting the description of in-scope merchandise, constitutes merchandise ''altered in form or appearance in minor respects'' from in-scope merchandise that should be considered subject to the AD *Order* on rebar from Mexico.[3] On March 18, 2020, Commerce published the *Preliminary Determination* of the anti-circumvention inquiry into Deacero's hooked rebar.[4] For a full description of the issues raised by parties for this final determination, *see* the Issues and Decision Memorandum.[5]

Scope of the Order

The merchandise subject to this *Order* is steel concrete reinforcing bar imported in either straight length or coil form (rebar) regardless of metallurgy, length, diameter, or grade. The subject merchandise is classifiable in the Harmonized Tariff Schedule of the United States (HTSUS) primarily under item numbers 7213.10.0000, 7214.20.0000, and 7228.30.8010.

The subject merchandise may also enter under other HTSUS numbers including 7215.90.1000, 7215.90.5000, 7221.00.0017, 7221.00.0018, 7221.00.0030, 7221.00.0045, 7222.11.0001, 7222.11.0057, 7222.11.0059, 7222.30.0001, 7227.20.0080, 7227.90.6085, 7228.20.1000, and 7228.60.6000. Specifically excluded are plain rounds (*i.e.,* non-deformed or smooth rebar). Also excluded from the scope is deformed steel wire meeting ASTM A1064/A1064M with no bar markings (*e.g.,* mill mark, size or grade) and without being subject to an elongation test. HTSUS numbers are provided for convenience and customs purposes, however, the written description of the scope remains dispositive.

Scope of the Circumvention Inquiry

The merchandise subject to this circumvention inquiry consists of otherwise straight steel concrete reinforcing bar bent on one or both ends and otherwise meeting the description of in-scope merchandise under the *Order* produced and/or exported by Deacero from Mexico to the United States.

Statutory and Regulatory Framework

Commerce reached this anti-circumvention determination under section 781(c) of the Tariff Act of 1930, as amended (the Act), which deals with minor alterations of merchandise. For a full description of the methodology

[1] *See Steel Concrete Reinforcing Bar from Mexico: Final Determination of Sales at Less Than Fair Value and Final Affirmative Determination of Critical Circumstances,* 79 FR 54967 (September 15, 2014) (*Order*).

[2] *See* Petitioner's Letter, ''Steel Concrete Reinforcing Bar from Mexico: Request for Scope Ruling or, Alternatively, an Anti-Circumvention Ruling,'' dated September 3, 2019.

[3] *See Steel Concrete Reinforcing Bar from Mexico: Initiation of Anti-Circumvention Inquiry of Antidumping Duty Order,* 84 FR 58132 (October 30, 2019), and accompanying Initiation Memorandum.

[4] *See Steel Concrete Reinforcing Bar from Mexico: Affirmative Preliminary Determination of Circumvention of the Antidumping Duty Order,* 85 FR 15430 (March 18, 2020) (*Preliminary Determination*), and accompanying Preliminary Decision Memorandum.

[5] *See* Memorandum, ''Final Affirmative Circumvention Decision Memorandum Concerning Certain Hooked or Bent Steel Concrete Reinforcing Bar Produced and/or Exported by Deacero S.A.P.I. de C.V (Deacero),'' dated concurrently with, and hereby adopted by, this notice (Issues and Decision Memorandum).

underlying our conclusions, *see* the Issues and Decision Memorandum.[6]

Final Affirmative Determination

We determine, pursuant to section 781(c) of the Act that hooked rebar produced and/or exported to the United States by Deacero constitutes merchandise ''altered in form or appearance in minor respects'' that should be considered within the class or kind of merchandise subject to the *Order.*

Suspension of Liquidation

As stated above, Commerce has made an affirmative finding of circumvention of the *Order* with respect to hooked rebar produced and/or exported by Deacero. In accordance with 19 CFR 351.225(l)(2), we will direct U.S. Customs and Border Protection (CBP) continue to suspend liquidation of entries of otherwise straight steel concrete reinforcing bar bent on one or both ends and otherwise meeting the description of in-scope merchandise under the *Order,* if such entries are (1) produced and/or exported to the United States by Deacero, and (2) entered, or withdrawn from warehouse, for consumption on or after October 18, 2019, the date of the initiation of this inquiry. Pursuant to 19 CFR 351.225(l)(2), we will also instruct CBP to continue to require a cash deposit of estimated duties equal to the AD rate in effect for Deacero for each such unliquidated entry. The suspension of liquidation instructions remains in effect until further notice.

Hooked rebar produced and/or exported by Deacero that has been sold in connection with a specific, identified construction project and produced according to an engineer's structural design, consistent with industry standards, is not subject to this inquiry. However, imports of such merchandise are subject to certification requirements, and cash deposits may be required if the certification requirements are not satisfied. Accordingly, if an importer imports hooked rebar from Mexico produced and/or exported by Deacero and claims that the hooked rebar has been sold in connection with a specific, identified construction project and produced according to an engineer's structural design, consistent with industry standards, the importer is required to meet the certification and documentation requirements described in Appendices II and III. In the situation where the importer has not maintained the requisite certification, Commerce will instruct CBP to suspend the entry and collect cash deposits at the rate in effect for Deacero at the time of entry.

Notification Regarding Administrative Protective Orders

This notice will serve as the only reminder to parties subject to administrative protective order (APO) of their responsibility concerning the destruction of proprietary information disclosed under APO in accordance with 19 CFR 351.305(a)(3). Timely written notification of return/destruction or APO materials or conversion to judicial protective order is hereby requested. Failure to comply with the regulations and the terms of an APO is a sanctionable violation.

Notification to Interested Parties

This final affirmative circumvention determination is in accordance with section 781(c) of the Act and 19 CFR 351.225(f).

Dated: May 29, 2020.

Jeffrey I. Kessler,

Assistant Secretary for Enforcement and Compliance.

Appendix I

List of Topics Discussed in the Final Decision Memorandum

I. Summary
II. Background
III. Scope of the Order
IV. Merchandise Subject to the Anti-Circumvention Inquiry
V. Discussion of the Issues
  Comment 1: Whether Deacero's Hooked Rebar was Seen as Straight Rebar
  Comment 2: First Prong of the Minor Alteration Analysis—Overall Physical Characteristics
  Comment 3: Second Prong of the Minor Alteration Analysis—Expectations of Ultimate Users
  Comment 4: Third Prong of the Minor Alteration Analysis—Use of Merchandise
  Comment 5: Fourth Prong of the Minor Alteration Analysis—Channels of Marketing
  Comment 6: Fifth Prong of the Minor Alteration Analysis—Cost of Modification
  Comment 7: Whether Commerce Should Modify the Certification Requirement to Allow Deacero to Certify Hooked Rebar Not Directly Connected to Construction Projects and/or to Allow Deacero to Complete the Certification Within a ''Reasonable'' Number of Days After Entry
VI. Recommendation

Appendix II

Certification Requirements

If an importer imports otherwise straight rebar bent on one or both ends (hooked rebar) from Mexico produced and/or exported by Deacero and claims that the hooked rebar has been sold in connection with a specific, identified construction project and produced according to an engineer's structural design, consistent with industry standards, the importer is required to complete and maintain the importer certification attached hereto as Appendix III and all supporting documentation. Where the importer uses a broker to facilitate the entry process, the importer should obtain the entry summary number from the broker. Agents of the importer, such as brokers, however, are not permitted to make this certification on behalf of the importer.

For entries on or after the date of publication of this notice in the **Federal Register**, for which certifications are required, importers should use the certification contained in Appendix III and should complete the required certification at or prior to the date of Entry Summary.

The importer is also required to maintain sufficient documentation supporting its certifications. The importer will not be required to submit the certifications or supporting documentation to U.S. Customs and Border Protection (CBP) as part of the entry process at this time. However, the importer will be required to present the certifications and supporting documentation to Commerce and/or CBP, as applicable, upon request by the respective agency. Additionally, the claims made in the certifications and any supporting documentation are subject to verification by Commerce and/or CBP. The importer is required to maintain the certification and supporting documentation for the later of: (1) A period of five years from the date of entry, or (2) a period of three years after the conclusion of any litigation in United States courts regarding such entries.

In the situation where no certification is provided for an entry, Commerce intends to instruct CBP to suspend liquidation of the entry and collect cash deposits at the rate applicable to Deacero for subject merchandise.

Appendix III

Importer Certification

I hereby certify that:

(A) My name is {IMPORTING COMPANY OFFICIAL'S NAME} and I am an official of {IMPORTING COMPANY};

(B) I have direct personal knowledge of the facts regarding the importation into the Customs territory of the United States of the otherwise straight rebar bent on one or both ends (hooked rebar) from Mexico produced and/or exported by Deacero S.A.P.I. (Deacero) that entered under entry summary number(s), identified below, and which are covered by this certification. ''Direct personal knowledge'' for purposes of this certification refers to facts in records maintained by the importing company in the normal course of its business.

(C) The hooked rebar covered by this certification was produced and/or exported by Deacero.

(D) If the importer is acting on behalf of the first U.S. customer, complete this paragraph, if not put ''NA'' at the end of this paragraph:

The hooked rebar from Mexico produced and/or exported by Deacero covered by this certification was imported by {NAME OF

[6] *Id.*

IMPORTING COMPANY} on behalf of {NAME OF U.S. CUSTOMER}, located at {ADDRESS OF U.S. CUSTOMER}.

(E) The hooked rebar from Mexico produced and/or exported by Deacero covered by this certification was shipped to {NAME OF PARTY TO WHOM MERCHANDISE WAS FIRST SHIPPED IN THE UNITED STATES}, located at {ADDRESS OF SHIPMENT}.

(F) I have personal knowledge of the facts regarding the production of hooked rebar from Mexico produced and/or exported by Deacero identified below. ''Personal knowledge'' includes facts obtained from another party (*e.g.,* correspondence received by the importer from the producer regarding the country of manufacture of the imported products).

(G) The hooked rebar from Mexico was produced and/or exported by Deacero.

(H) The imports of hooked rebar have been sold in connection with a specific, identified construction project and produced according to an engineer's structural design, consistent with industry standards.

(I) This certification applies to the following entries (repeat this block as many times as necessary):

Producer:
Exporter:
Entry Summary #:
Entry Summary Line Item #:
Invoice #:
Invoice Line Item #:

(J) I understand that {NAME OF IMPORTING COMPANY} is required to maintain a copy of this certification and sufficient documentation supporting this certification (*i.e.,* documents maintained in the normal course of business, or documents obtained by the certifying party, for example, mill certificates, production records, invoices, *etc.*) for the later of (1) a period of five years from the date of entry or (2) a period of three years after the conclusion of any litigation in the United States courts regarding such entries.

(K) I understand that {NAME OF IMPORTING COMPANY} is required to provide this certification and supporting records, upon request, to U.S. Customs and Border Protection (CBP) and/or the Department of Commerce (Commerce).

(L) I understand that the claims made herein, and the substantiating documentation, are subject to verification by CBP and/or Commerce.

(M) I understand that failure to maintain the required certifications, and/or failure to substantiate the claims made herein, and/or failure to allow CBP and/or Commerce to verify the claims made herein, may result in a determination that all entries to which this certification applies are within the scope of the antidumping duty order on steel concrete reinforcing bar from Mexico. I understand that such finding could result in:

(i) suspension of liquidation of all unliquidated entries (and entries for which liquidation has not become final) for which these requirements were not met;

(ii) the requirement that the importer post applicable antidumping duty cash deposits (as appropriate) equal to the rates determined by Commerce; and

(iii) the revocation of {NAME OF IMPORTING COMPANY}'s privilege to certify future imports of steel concrete reinforcing bar from Mexico.

(N) I understand that agents of the importer, such as brokers, are not permitted to make this certification.

(O) This certification was completed at or prior to the time of entry summary.

(P) I am aware that U.S. law (including, but not limited to, 18 U.S.C. 1001) imposes criminal sanctions on individuals who knowingly and willfully make material false statements to the U.S. government.

Signature
NAME OF COMPANY OFFICIAL
TITLE
DATE

[FR Doc. 2020–12261 Filed 6–5–20; 8:45 am]

BILLING CODE 3510–DS–P

DEPARTMENT OF COMMERCE

International Trade Administration

[A–570–121]

Difluorormethane (R–32) From the People's Republic of China: Postponement of Preliminary Determination in the Less-Than-Fair-Value Investigation

AGENCY: Enforcement and Compliance, International Trade Administration, Department of Commerce.

DATES: Applicable June 8, 2020.

FOR FURTHER INFORMATION CONTACT: Joshua Tucker or William Miller, AD/CVD Operations, Office II, Enforcement and Compliance, International Trade Administration, U.S. Department of Commerce, 1401 Constitution Avenue NW, Washington, DC 20230; telephone: (202) 482–2044 or (202) 482–3906, respectively.

SUPPLEMENTARY INFORMATION:

Background

On February 12, 2020, the Department of Commerce (Commerce) initiated a less-than-fair-value (LTFV) investigation of imports of difluoromethane (R–32) from the People's Republic of China.[1] Currently, the preliminary determination is due no later than July 1, 2020.

Postponement of Preliminary Determination

Section 733(b)(1)(A) of the Tariff Act of 1930, as amended (the Act), requires Commerce to issue the preliminary determination in a LTFV investigation within 140 days after the date on which Commerce initiated the investigation. However, section 733(c)(1)(A)(b)(1) of the Act permits Commerce to postpone the preliminary determination until no later than 190 days after the date on which Commerce initiated the investigation if: (A) The petitioner makes a timely request for a postponement; or (B) Commerce concludes that the parties concerned are cooperating, that the investigation is extraordinarily complicated, and that additional time is necessary to make a preliminary determination. Under 19 CFR 351.205(e), the petitioner must submit a request for postponement 25 days or more before the scheduled date of the preliminary determination and must state the reasons for the request. Commerce will grant the request unless it finds compelling reasons to deny the request.

On May 22, 2020, the petitioner[2] submitted a timely request that Commerce postpone the preliminary determination in this LTFV investigation.[3] The petitioner stated that it requests postponement of the preliminary determination to allow Commerce to analyze supplemental questionnaire responses and request further clarification to thoroughly investigate the issues presented in this case.[4]

In accordance with 19 CFR 351.205(e), the petitioner has stated the reasons for requesting a postponement of the preliminary determination, and Commerce finds no compelling reasons to deny the request. Therefore, in accordance with section 733(c)(1)(A) of the Act, Commerce is postponing the deadline for the preliminary determination to August 20, 2020, 190 days after the date on which this investigation was initiated. In accordance with section 735(a)(1) of the Act and 19 CFR 351.210(b)(1), the deadline for the final determination of this investigation will continue to be 75 days after the date of the preliminary determination.

This notice is issued and published pursuant to section 733(c)(2) of the Act and 19 CFR 351.205(f)(1).

Dated: June 1, 2020.

Jeffrey I. Kessler,

Assistant Secretary for Enforcement and Compliance.

[FR Doc. 2020–12324 Filed 6–5–20; 8:45 am]

BILLING CODE 3510–DS–P

[1] *See Difluoromethane (R–32) from the People's Republic of China: Initiation of Less-Than-Fair-Value Investigation,* 85 FR 10406 (February 24, 2020).

[2] The petitioner is Arkema, Inc.

[3] *See* Petitioner's Letter, ''Difluoromethane (R–32) from the People's Republic of China: Petitioner's Request to Postpone Preliminary Determination,'' dated May 22, 2020.

[4] *Id.* at 2.

DEPARTMENT OF COMMERCE

International Trade Administration

Initiation of Antidumping and Countervailing Duty Administrative Reviews

AGENCY: Enforcement and Compliance, International Trade Administration, Department of Commerce.

SUMMARY: The Department of Commerce (Commerce) has received requests to conduct administrative reviews of various antidumping duty (AD) and countervailing duty (CVD) orders and findings with April anniversary dates. In accordance with Commerce's regulations, we are initiating those administrative reviews.

DATES: Applicable June 8, 2020.

FOR FURTHER INFORMATION CONTACT: Brenda E. Brown, AD/CVD Operations, Customs Liaison Unit, Enforcement and Compliance, International Trade Administration, U.S. Department of Commerce, 1401 Constitution Avenue NW, Washington, DC 20230, telephone: (202) 482–4735.

SUPPLEMENTARY INFORMATION:

Background

Commerce has received timely requests, in accordance with 19 CFR 351.213(b), for administrative reviews of various AD and CVD orders and findings with April anniversary dates.

All deadlines for the submission of various types of information, certifications, or comments or actions by Commerce discussed below refer to the number of calendar days from the applicable starting time.

Notice of No Sales

If a producer or exporter named in this notice of initiation had no exports, sales, or entries during the period of review (POR), it must notify Commerce within 30 days of publication of this notice in the **Federal Register**. All submissions must be filed electronically at *https://access.trade.gov* in accordance with 19 CFR 351.303.[1] Such submissions are subject to verification, in accordance with section 782(i) of the Tariff Act of 1930, as amended (the Act). Further, in accordance with 19 CFR 351.303(f)(1)(i), a copy must be served on every party on Commerce's service list.

Respondent Selection

In the event Commerce limits the number of respondents for individual examination for administrative reviews initiated pursuant to requests made for the orders identified below, Commerce intends to select respondents based on U.S. Customs and Border Protection (CBP) data for U.S. imports during the POR. We intend to place the CBP data on the record within five days of publication of the initiation notice and to make our decision regarding respondent selection within 30 days of publication of the initiation **Federal Register** notice. Comments regarding the CBP data and respondent selection should be submitted within seven days after the placement of the CBP data on the record of this review. Parties wishing to submit rebuttal comments should submit those comments within five days after the deadline for the initial comments.

In the event Commerce decides it is necessary to limit individual examination of respondents and conduct respondent selection under section 777A(c)(2) of the Act, the following guidelines regarding collapsing of companies for purposes of respondent selection will apply. In general, Commerce has found that determinations concerning whether particular companies should be ''collapsed'' (*e.g.,* treated as a single entity for purposes of calculating antidumping duty rates) require a substantial amount of detailed information and analysis, which often require follow-up questions and analysis. Accordingly, Commerce will not conduct collapsing analyses at the respondent selection phase of this review and will not collapse companies at the respondent selection phase unless there has been a determination to collapse certain companies in a previous segment of this AD proceeding (*e.g.,* investigation, administrative review, new shipper review, or changed circumstances review). For any company subject to this review, if Commerce determined, or continued to treat, that company as collapsed with others, Commerce will assume that such companies continue to operate in the same manner and will collapse them for respondent selection purposes. Otherwise, Commerce will not collapse companies for purposes of respondent selection. Parties are requested to (a) identify which companies subject to review previously were collapsed, and (b) provide a citation to the proceeding in which they were collapsed. Further, if companies are requested to complete the Quantity and Value (Q&V) Questionnaire for purposes of respondent selection, in general, each company must report volume and value data separately for itself. Parties should not include data for any other party, even if they believe they should be treated as a single entity with that other party. If a company was collapsed with another company or companies in the most recently completed segment of this proceeding where Commerce considered collapsing that entity, complete Q&V data for that collapsed entity must be submitted.

Deadline for Withdrawal of Request for Administrative Review

Pursuant to 19 CFR 351.213(d)(1), a party that has requested a review may withdraw that request within 90 days of the date of publication of the notice of initiation of the requested review. The regulation provides that Commerce may extend this time if it is reasonable to do so. Determinations by Commerce to extend the 90-day deadline will be made on a case-by-case basis.

Deadline for Particular Market Situation Allegation

Section 504 of the Trade Preferences Extension Act of 2015 amended the Act by adding the concept of a particular market situation (PMS) for purposes of constructed value under section 773(e) of the Act.[2] Section 773(e) of the Act states that ''if a particular market situation exists such that the cost of materials and fabrication or other processing of any kind does not accurately reflect the cost of production in the ordinary course of trade, the administering authority may use another calculation methodology under this subtitle or any other calculation methodology.'' When an interested party submits a PMS allegation pursuant to section 773(e) of the Act, Commerce will respond to such a submission consistent with 19 CFR 351.301(c)(2)(v). If Commerce finds that a PMS exists under section 773(e) of the Act, then it will modify its dumping calculations appropriately.

Neither section 773(e) of the Act nor 19 CFR 351.301(c)(2)(v) set a deadline for the submission of PMS allegations and supporting factual information. However, in order to administer section 773(e) of the Act, Commerce must receive PMS allegations and supporting factual information with enough time to consider the submission. Thus, should an interested party wish to submit a PMS allegation and supporting new factual information pursuant to section 773(e) of the Act, it must do so no later than 20 days after submission of initial

[1] *See Antidumping and Countervailing Duty Proceedings: Electronic Filing Procedures; Administrative Protective Order Procedures,* 76 FR 39263 (July 6, 2011).

[2] *See* Trade Preferences Extension Act of 2015, Public Law 114–27, 129 Stat. 362 (2015).

responses to section D of the questionnaire.

Separate Rates

In proceedings involving non-market economy (NME) countries, Commerce begins with a rebuttable presumption that all companies within the country are subject to government control and, thus, should be assigned a single antidumping duty deposit rate. It is Commerce's policy to assign all exporters of merchandise subject to an administrative review in an NME country this single rate unless an exporter can demonstrate that it is sufficiently independent so as to be entitled to a separate rate.

To establish whether a firm is sufficiently independent from government control of its export activities to be entitled to a separate rate, Commerce analyzes each entity exporting the subject merchandise. In accordance with the separate rates criteria, Commerce assigns separate rates to companies in NME cases only if respondents can demonstrate the absence of both *de jure* and *de facto* government control over export activities.

All firms listed below that wish to qualify for separate rate status in the administrative reviews involving NME countries must complete, as appropriate, either a separate rate application or certification, as described below. For these administrative reviews, in order to demonstrate separate rate eligibility, Commerce requires entities for whom a review was requested, that were assigned a separate rate in the most recent segment of this proceeding in which they participated, to certify that they continue to meet the criteria for obtaining a separate rate. The Separate Rate Certification form will be available on Commerce's website at *https://enforcement.trade.gov/nme/nme-sep-rate.html* on the date of publication of this **Federal Register** notice. In responding to the certification, please follow the ''Instructions for Filing the Certification'' in the Separate Rate Certification. Separate Rate Certifications are due to Commerce no later than 30 calendar days after publication of this **Federal Register** notice. The deadline and requirement for submitting a Certification applies equally to NME-owned firms, wholly foreign-owned firms, and foreign sellers who purchase and export subject merchandise to the United States.

Entities that currently do not have a separate rate from a completed segment of the proceeding [3] should timely file a Separate Rate Application to demonstrate eligibility for a separate rate in this proceeding. In addition, companies that received a separate rate in a completed segment of the proceeding that have subsequently made changes, including, but not limited to, changes to corporate structure, acquisitions of new companies or facilities, or changes to their official company name,[4] should timely file a Separate Rate Application to demonstrate eligibility for a separate rate in this proceeding. The Separate Rate Application will be available on Commerce's website at *https://enforcement.trade.gov/nme/nme-sep-rate.html* on the date of publication of this **Federal Register** notice. In responding to the Separate Rate Application, refer to the instructions contained in the application. Separate Rate Applications are due to Commerce no later than 30 calendar days after publication of this **Federal Register** notice. The deadline and requirement for submitting a Separate Rate Application applies equally to NME-owned firms, wholly foreign-owned firms, and foreign sellers that purchase and export subject merchandise to the United States.

For exporters and producers who submit a Separate Rate Application or Certification and subsequently are selected as mandatory respondents, these exporters and producers will no longer be eligible for separate rate status unless they respond to all parts of the questionnaire as mandatory respondents.

Initiation of Reviews

In accordance with 19 CFR 351.221(c)(1)(i), we are initiating administrative reviews of the following AD and CVD orders and findings. We intend to issue the final results of these reviews not later than April 30, 2021.

	Period to be reviewed
AD Proceedings	
ARGENTINA: Biodiesel, A–357–820	4/1/19–3/31/20
Aceitera General Deheza S.A.	
Bio Nogoya S.A.	
Bunge Argentina S.A.	
Cámara Argentina de Biocombustibles	
Cargill S.A.C.I.	
COFCO Argentina S.A.	
Explora	
GEFCO Argentina	
LDC Argentina S.A.	
Molinos Agro S.A.	
Noble Argentina	
Oleaginosa Moreno Hermanos S.A.	
Patagonia Bioenergia	
Renova S.A.	
T6 Industrial SA (EcoFuel)	
Unitec Bio S.A.	
Vicentin S.A.I.C.	
Viluco S.A.	
INDONESIA: Biodiesel, A–560–830	4/1/19–3/31/20

[3] Such entities include entities that have not participated in the proceeding, entities that were preliminarily granted a separate rate in any currently incomplete segment of the proceeding (*e.g.,* an ongoing administrative review, new shipper review, *etc.*) and entities that lost their separate rate in the most recently completed segment of the proceeding in which they participated.

[4] Only changes to the official company name, rather than trade names, need to be addressed via a Separate Rate Application. Information regarding new trade names may be submitted via a Separate Rate Certification.

	Period to be reviewed
PT Cermerlang Energi Perkasa (CEP)	
PT Ciliandra Perkasa	
PT. Musim Mas, Medan	
Wilmar International Ltd.	
THE PEOPLE'S REPUBLIC OF CHINA: 1,1,1,2-Tetrafluoroethane (R–134a), A–570–044	4/1/19–3/31/20
Puremann, Inc.	
THE PEOPLE'S REPUBLIC OF CHINA: Certain Activated Carbon, A–570–904	4/1/19–3/31/20
AM Global Shipping Lines Co., Ltd.	
Apex Maritime (Tianjin) Co., Ltd.	
Ardic Worldwide Logistics Ltd.	
Beijing Kang Jie Kong International Cargo Agent Co Ltd	
Beijing Pacific Activated Carbon Products Co., Ltd.	
Bengbu Modern Environmental Co., Ltd.	
Brilliant Logistics Group Inc.	
Carbon Activated Tianjin Co., Ltd.	
China Combi Works Oy Ltd.	
China International Freight Co., Ltd.	
Cohesion Freight (HK) Ltd.	
Datong Juqiang Activated Carbon Co., Ltd.	
Datong Municipal Yunguang	
Datong Municipal Yunguang Activated Carbon Co., Ltd.	
De Well Container Shipping Corp.	
Derun Charcoal Carbon Co., Ltd.	
Endurance Cargo Management Co., Ltd.	
Envitek (China) Ltd.	
Excel Shipping Co., Ltd.	
Fujian Xinsen Carbon Co., Ltd.	
Fuzhou Yihuan Carbon Co., Ltd.	
Fuzhou Yuemengfeng Trade Co., Ltd.	
Gongyi City Bei Shan Kou Water Purification Materials Factory	
Guangdong Hanyan Activated Carbon Manufacturing Co., Ltd.	
Guangzhou Four E'S Scientific Co., Ltd.	
Hangzhou Hengxing Activated Carbon	
Henan Dailygreen Trading Co., Ltd.	
Honour Lane Shipping Ltd.	
Ingevity Corp.	
Ingevity Performance Materials	
Jacobi Carbons AB/Tianjin Jacobi International Trade Co., Ltd./Jacobi Carbons Industry (Tianjin) [5]	
Jiangsu Kejing Carbon Fiber Co., Ltd.	
Jiangxi Yuanli Huaiyushan Active Carbon	
Jilin Bright Future Chemicals Co.	
King Freight International Corp.	
M Chemical Company, Inc.	
Meadwestvaco Trading (Shanghai)	
Muk Chi Trade Co., Ltd.	
Nanping Yuanli Active Carbon Co.	
Ningxia Guanghua Cherishmet Activated Carbon Co., Ltd.	
Ningxia Huahui Activated Carbon Co., Ltd.	
Ningxia Mineral & Chemical Limited	
Pacific Star Express (China) Company Ltd.	
Panalpina World Transport (PRC) Ltd.	
Pingdingshan Green Forest Activated Carbon Factory	
Pingdingshan Lvlin Activated Carbon Co., Ltd.	
Pudong Prime International Logistics	
Safround Logistics Co.	
Seatrade International Transportation	
Shanghai Caleb Industrial Co. Ltd.	
Shanghai Express Global International	
Shanghai Line Feng Int'l Transportation	
Shanghai Pudong International Transportation	
Shanghai Sunson Activated Carbon	
Shanghai Xinjinhu Activated Carbon	
Shanxi Dapu International Trade Co., Ltd.	
Shanxi DMD Corp.	
Shanxi Industry Technology Trading (ITT)	
Shanxi Industry Technology Trading Co., Ltd.	
Shanxi Sincere Industrial Co., Ltd.	
Shanxi Tianxi Purification Filter Co., Ltd.	
Shenzhen Calux Purification Technology Co., Ltd.	
Shijiazhuang Tangju Trading Co.	
Sinoacarbon International Trading Co., Ltd.	
Tancarb Activated Carbon Co., Ltd.	

	Period to be reviewed
The Ultimate Solid Logistics Ltd.	
T.H.I. Group (Shanghai) Ltd.	
Tianjin Channel Filters Co., Ltd.	
Tianjin Maijin Industries Co., Ltd.	
Translink Shipping Inc.	
Trans-Power International Logistics Co., Ltd.	
Triple Eagle Container Line	
U.S. United Logistics (Ningbo) Inc.	
Yusen Logistics Co., Ltd.	
Zhejiang Topc Chemical Industry	
Zhengzhou Zhulin Activated Carbon	
THE PEOPLE'S REPUBLIC OF CHINA: Certain Aluminum Foil, A–570–053	4/1/19–3/31/20
Alcha International Holdings Limited	
Anhui Maximum Aluminium Industries Company Ltd.	
Baotou Alcha Aluminum Co., Ltd.	
Dingsheng Aluminum Industries (Hong Kong) Trading Co., Ltd.	
Granges Aluminum (Shanghai) Co., Ltd.	
Guangxi Baise Xinghe Aluminum Industry Co., Ltd.	
Hangzhou DingCheng Aluminum Co., Ltd.	
Hangzhou Dingsheng Import & Export Co. Ltd.	
Hangzhou Dingsheng Industrial Group Co. Ltd.	
Hangzhou Five Star Aluminum Co., Ltd.	
Hangzhou Teemful Aluminum Co., Ltd.	
Huafon Nikkei Aluminium Corporation	
Hunan Suntown Marketing Limited	
Jiangsu Alcha Aluminium Co., Ltd.	
Jiangsu Huafeng Aluminum Industry Co., Ltd.	
Jiangsu Dingsheng New Materials Joint-Stock Co., Ltd.	
Jiangsu Zhongji Lamination Materials Co., Ltd.	
Jiangsu Zhongji Lamination Materials Co., (HK) Ltd.	
Jiangsu Zhongji Lamination Materials Stock Co., Ltd.	
Jiangyin Dolphin Pack Ltd. Co.	
Luoyang Longding Aluminium Industries Co., Ltd.	
Shandong Yuanrui Metal Material Co., Ltd.	
Shantou Wanshun Package Material Stock Co., Ltd.	
SNTO International Trade Limited	
Suntown Technology Group Corporation Limited	
Suntown Technology Group Limited	
Suzhou Manakin Aluminum Processing Technology Co., Ltd.	
Walson (HK) Trading Co., Limited	
Xiamen Xiashun Aluminum Foil Co. Ltd.	
Yantai Donghai Aluminum Foil Co., Ltd.	
Yantai Jintai International Trade Co., Ltd.	
Yinbang Clad Material Co., Ltd.	
Zhejiang Zhongjin Aluminum Industry Co., Ltd.	
THE PEOPLE'S REPUBLIC OF CHINA: Drawn Stainless Steel Sinks, A–570–983	4/1/19–3/31/20
B&R Industries Limited	
Feidong Import and Export Co., Ltd.	
Foshan Shunde MingHao Kitchen Utensils Co., Ltd.	
Foshan Zhaoshun Trade Co., Ltd.	
Franke Asia Sourcing Ltd.	
Grand Hill Work Company	
Guangdong Dongyuan Kitchenware Industrial Co., Ltd.	
Guangdong G-Top Import & Export Co., Ltd.	
Guangdong New Shichu Import & Export Company Limited	
Guangdong Yingao Kitchen Utensils Co., Ltd.	
Hangzhou Heng's Industries Co., Ltd.	
Hubei Foshan Success Imp & Exp Co. Ltd.	
J&C Industries Enterprise Limited	
Jiangmen Hongmao Trading Co., Ltd.	
Jiangmen New Star Hi-Tech Enterprise Ltd.	
Jiangmen Pioneer Import & Export Co., Ltd.	
Jiangxi Zoje Kitchen & Bath Industry Co., Ltd.	
KaiPing Dawn Plumbing Products, Inc.	
Ningbo Afa Kitchen and Bath Co., Ltd.	
Ningbo Oulin Kitchen Utensils Co., Ltd.	
Primy Cooperation Limited	
Shenzhen Kehuaxing Industrial Ltd.	
Shunde Foodstuffs Import & Export Company Limited of Guangdong	
Shunde Native Produce Import and Export Co., Ltd. of Guangdong	
Xinhe Stainless Steel Products Co., Ltd.	
Yuyao Afa Kitchenware Co., Ltd.	
Zhongshan Newecan Enterprise Development Corporation	

	Period to be reviewed
Zhongshan Silk Imp. & Exp. Group Co., Ltd. of Guangdong	
Zhongshan Superte Kitchenware Co., Ltd.	
Zhuhai Kohler Kitchen & Bathroom Products, Ltd.	
THE PEOPLE'S REPUBLIC OF CHINA: Magnesium Metal, A–570–896	4/1/19–3/31/20
Tianjin Magnesium International Co., Ltd.	
Tianjin Magnesium Metal Co., Ltd.	
THE PEOPLE'S REPUBLIC OF CHINA: Stainless Steel Sheet and Strip, A–570–042	4/1/19–3/31/20
Ahonest Changjiang Stainless Co., Ltd.	
Angang Hanyang Stainless Steel Corp. (LISCO)	
Angang Guangzhou Stainless Steel Corporation (LISCO)	
Anping Yuanjing Metal Products Co., Ltd.	
Apex Industries Corporation	
Baofeng Xianglong Stainless Steel (Baofeng Steel Group Co.)	
Baojing Steel Ltd.	
Baosteel Stainless Steel Co., Ltd.	
Baosteel Desheng Stainless Steel Co., Ltd.	
Baotou Huayong Stainless Steel Co., Ltd.	
Beihai Chengde Ferronickel Stainless Steel	
Beijing Dayang Metal Industry Co.	
Beijing Hengsheng Tongda Stainless Steel	
Beijing Jingnanfang Decoration Engineering Co., Ltd.	
Benxi Iron and Steel	
Chain Chon Metal (Kunshan)	
Chain Chon Metal (Foshan)	
Changhai Stainless Steel	
Changzhou General Import and Export	
Changzhou Taiye Sensing Technology Co., Ltd.	
Compart Precision Co.	
Dalian Yirui Import and Export Agent Co., Ltd.	
Daming International Import and Export Co., Ltd.	
Dongbei Special Steel Group Co., Ltd.	
Double Stone Steel	
Etco (China) International Trading Co., Ltd.	
FHY Corporation	
Foshan Foreign Economic Enterprise	
Foshan Hermes Steel Co., Ltd.	
Foshan Jinfeifan Stainless Steel Co.	
Foshan Topson Stainless Steel Co.	
Fugang Group	
Fujian Fuxin Special Steel Co., Ltd.	
Fujian Kaixi Stainless Steel	
Fujian Wuhang STS Products Co., Ltd.	
Gangzhan Steel Developing Co., Ltd.	
Globe Express Services Co., Ltd.	
Golden Fund International Trading Co.	
Guangdong Forward Metal Supply Chain Co., Ltd.	
Guangdong Guangxin Suntec Metal Holdings Co., Ltd.	
Guanghan Tiancheng Stainless Steel Products Co., Ltd.	
Guangxi Beihai Chengde Group	
Guangxi Wuzhou Jinhai Stainless Steel Co.	
Guangzhou Eversunny Trading Co., Ltd.	
Haimen Senda Decoration Material Co.	
Hanyang Stainless Steel Co. (LISCO)	
Hebei Iron & Steel	
Henan Tianhong Metal (Subsidiary of Foshan Mellow Stainless Steel Company)	
Henan Xinjinhui Stainless Steel Co., Ltd. (aka Jinhui Group)	
Huadi Steel Group Co., Ltd.	
Ideal Products of Dongguan Ltd.	
Irestal Shanghai Stainless Pipe (ISSP)	
Jaway Metal Co., Ltd.	
Jiangdu Ao Jian Sports Apparatus Factory	
Jiangsu Daming Metal Products Co., Ltd.	
Jiangsu Jihongxin Stainless Steel Co., Ltd.	
Jiaxing Winner Import and Export Co., Ltd.	
Jiaxing Zhongda Import and Export Co., Ltd.	
Jieyang Baowei Stainless Steel Co., Ltd.	
Jinyun Xinyongmao	
Jiuquan Iron & Steel (JISCO)	
Kuehne & Nagel, Ltd. (Ningbo)	
Lianzhong Stainless Steel Corp. (LISCO)	
Lu Qin (Hong Kong) Co., Ltd.	
Maanshan Sungood Machinery Equipment Co., Ltd.	
Minmetals Steel Co., Ltd.	

	Period to be reviewed
Nanhi Tengshao Metal Manufacturing Co.	
NB (Ningbo) Rilson Export & Import Corp.	
Ningbo Baoxin Stainless Steel Co., Ltd.	
Ningbo Bestco Import & Export Co., Ltd.	
Ningbo Bingcheng Import & Export Co., Ltd.	
Ningbo Chinaworld Grand Import & Export Co., Ltd.	
Ningbo Dawon Resources Co., Ltd.	
Ningbo Economic and Technological Development Zone (Beilun Xiapu)	
Ningbo Hog Slat Trading Co., Ltd.	
Ningbo New Hailong Import & Export Co.	
Ningbo Polaris Metal Products Co.	
Ningbo Portec Sealing Component	
Ningbo Qiyi Precision Metals Co., Ltd.	
Ningbo Seduno Import & Export Co., Ltd.	
Ningbo Sunico International Ltd.	
Ningbo Swoop Import & Export	
Ningbo Yaoyi International Trading Co., Ltd.	
Onetouch Business Service, Ltd.	
Qianyuan Stainless Steel	
Qingdao-Pohang Stainless Steel (QPSS)	
Qingdao Rising Sun International Trading Co., Ltd.	
Qingdao Sincerely Steel	
Rihong Stainless Co., Ltd.	
Ruitian Steel	
Samsung Precision Stainless Steel (Pinghu) Co., Ltd.	
Sejung Sea & Air Co., Ltd.	
Shandong Huaye Stainless Steel Group Co., Ltd.	
Shandong Mengyin Huarun Imp and Exp Co., Ltd.	
Shandong Mingwei Stainless Steel Products Co., Ltd.	
Shanghai Dongjing Import & Export Co.	
Shanghai Fengye Industry Co., Ltd.	
Shanghai Ganglian E-Commerce Holdings Co., Ltd.	
Shanghai Krupp Stainless (SKS)	
Shanghai Metal Corporation	
Shanghai Tankii Alloy Material Co., Ltd.	
Shanxi Taigang Stainless Steel Co., Ltd. (TISCO)	
Shaoxing Andrew Metal Manufactured Co., Ltd.	
Shenzhen Brilliant Sign Co., Ltd.	
Shaoxing Yuzhihang Import & Export Trade Co., Ltd.	
Shenzhen Wide International Trade Co., Ltd.	
Sichuan Southwest Stainless Steel	
Sichuan Tianhong Stainless Steel	
Sino Base Metal Co., Ltd.	
Suzhou Xinchen Precision Industrial Materials Co., Ltd.	
Taishan Steel	
Taiyuan Accu Point Technology, Co., Ltd.	
Taiyuan Iron & Steel (TISCO)	
Taiyuan Ridetaixing Precision Stainless Steel Incorporated Co., Ltd.	
Taizhou Durable Hardware Co., Ltd.	
Tiancheng Stainless Steel Products	
Tianjin Fulida Supply Co., Ltd.	
Tianjin Hongji Stainless Steel Products Co., Ltd.	
Tianjin Jiuyu Trade Co., Ltd.	
Tianjin Taigang Daming Metal Product Co., Ltd.	
Tianjin Teda Ganghua Trade Co., Ltd.	
Tianjin Tianchengjida Import & Export Trade Co., Ltd.	
Tianjin Tianguan Yuantong Stainless Steel	
TISCO Stainless Steel (HK), Ltd.	
Top Honest Stainless Steel Co., Ltd.	
TPCO Yuantong Stainless Steel Ware	
Tsingshan Qingyuan	
World Express Freight Co., Ltd.	
Wuxi Baochang Metal Products Co., Ltd.	
Wuxi Fangzhu Precision Materials Co.	
Wuxi Grand Tang Metal Co., Ltd.	
Wuxi Jinyate Steel Co., Ltd.	
Wuxi Joyray International Corp.	
Wuxi Shuoyang Stainless Steel Co., Ltd.	
Xiamen Lizhou Hardware Spring Co., Ltd.	
Xinwen Mining	
Henan Xuyuan Stainless Steel Co., Ltd.	
Yieh Corp., Ltd.	
Yongjin Metal Technology	

	Period to be reviewed
Yuyao Purenovo Stainless Steel Co., Ltd.	
Zhangjiagang Pohang Stainless Steel Co., Ltd. (ZPSS)	
Zhejiang Baohong Stainless Steel Co., Ltd.	
Zhejiang Huashun Metals Co., Ltd.	
Zhejiang Jaguar Import & Export Co., Ltd.	
Zhejiang New Vision Import & Export	
Zhejiang Yongjin Metal Technology Co., Ltd.	
Zhengzhou Mingtai Industry Co., Ltd.	
Zhenjiang Huaxin Import & Export	
Zhenjiang Yongyin Metal Tech Co.	
Zhenshi Group Eastern Special Steel Co., Ltd.	
Zun Hua City Transcend Ti-Gold	
CVD Proceedings	
THE PEOPLE'S REPUBLIC OF CHINA: Certain Aluminum Foil, C–570–054	1/1/19–12/31/19
Alcha International Holdings Limited	
Anhui Maximum Aluminium Industries Company Ltd.	
Baotou Alcha Aluminum Co., Ltd.	
Dingsheng Aluminum Industries (Hong Kong) Trading Co. Ltd.	
Granges Aluminum (Shanghai) Co., Ltd.	
Guangxi Baise Xinghe Aluminum Industry Co., Ltd.	
Hangzhou DingCheng Aluminum Co., Ltd.	
Hangzhou Dingsheng Import & Export Co. Ltd.	
Hangzhou Dingsheng Industrial Group Co. Ltd.	
Hangzhou Five Star Aluminum Co., Ltd.	
Hangzhou Teemful Aluminum Co., Ltd.	
Huafon Nikkei Aluminium Corporation	
Hunan Suntown Marketing Limited	
Jiangsu Alcha Aluminum Co., Ltd.	
Jiangsu Dingsheng New Materials Joint-Stock Co., Ltd.	
Jiangsu Huafeng Aluminum Industry Co., Ltd.	
Jiangsu Zhongji Lamination Materials Co., Ltd.	
Jiangsu Zhongji Lamination Materials Co., (HK) Limited	
Jiangsu Zhongji Lamination Materials Stock Co., Ltd.	
Jiangyin Dolphin Pack Ltd. Co.	
Luoyang Longding Aluminium Industries Co., Ltd.	
Shandong Yuanrui Metal Material Co., Ltd.	
Shantou Wanshun Package Material Stock Co., Ltd.	
SNTO International Trade Limited	
Suntown Technology Group Corporation Limited	
Suntown Technology Group Limited	
Suzhou Manakin Aluminum Processing Technology Co., Ltd.	
Walson (HK) Trading Co., Limited	
Xiamen Xiashun Aluminum Foil Co., Ltd.	
Yantai Donghai Aluminum Foil Co., Ltd.	
Yantai Jintai International Trade Co., Ltd.	
Yinbang Clad Material Co., Ltd.	
Zhejiang Zhongiin Aluminum Industry Co., Ltd.	
THE PEOPLE'S REPUBLIC OF CHINA: Stainless Steel Sheet and Strip, C–570–043	1/1/19–12/31/19
Ahonest Changjiang Stainless Co., Ltd.	
Angang Hanyang Stainless Steel Corp. (LISCO)	
Angang Guangzhou Stainless Steel Corporation (LISCO)	
Anping Yuanjing Metal Products Co., Ltd.	
Apex Industries Corporation	
Baofeng Xianglong Stainless Steel (Baofeng Steel Group Co.)	
Baojing Steel Ltd.	
Baosteel Stainless Steel Co., Ltd.	
Baosteel Desheng Stainless Steel Co., Ltd.	
Baotou Huayong Stainless Steel Co., Ltd.	
Beihai Chengde Ferronickel Stainless Steel	
Beijing Dayang Metal Industry Co.	
Beijing Hengsheng Tongda Stainless Steel	
Beijing Jingnanfang Decoration Engineering Co., Ltd.	
Benxi Iron and Steel	
Chain Chon Metal (Kunshan)	
Chain Chon Metal (Foshan)	
Changhai Stainless Steel	
Changzhou General Import and Export	
Changzhou Taiye Sensing Technology Co., Ltd.	
Compart Precision Co.	
Dalian Yirui Import and Export Agent Co., Ltd.	
Daming International Import and Export Co., Ltd.	
Dongbei Special Steel Group Co., Ltd.	
Double Stone Steel	

	Period to be reviewed
Etco (China) International Trading Co., Ltd.	
FHY Corporation	
Foshan Foreign Economic Enterprise	
Foshan Hermes Steel Co., Ltd.	
Foshan Jinfeifan Stainless Steel Co.	
Foshan Topson Stainless Steel Co.	
Fugang Group	
Fujian Fuxin Special Steel Co., Ltd.	
Fujian Kaixi Stainless Steel	
Fujian Wuhang STS Products Co., Ltd.	
Gangzhan Steel Developing Co., Ltd.	
Globe Express Services Co., Ltd.	
Golden Fund International Trading Co.	
Guangdong Forward Metal Supply Chain Co., Ltd.	
Guangdong Guangxin Suntec Metal Holdings Co., Ltd.	
Guanghan Tiancheng Stainless Steel Products Co., Ltd.	
Guangxi Beihai Chengde Group	
Guangxi Wuzhou Jinhai Stainless Steel Co.	
Guangzhou Eversunny Trading Co., Ltd.	
Haimen Senda Decoration Material Co.	
Hanyang Stainless Steel Co. (LISCO)	
Hebei Iron & Steel	
Henan Tianhong Metal (Subsidiary of Foshan Mellow Stainless Steel Company)	
Henan Xinjinhui Stainless Steel Co., Ltd. (aka Jinhui Group)	
Huadi Steel Group Co., Ltd.	
Ideal Products of Dongguan Ltd.	
Irestal Shanghai Stainless Pipe (ISSP)	
Jaway Metal Co., Ltd.	
Jiangdu Ao Jian Sports Apparatus Factory	
Jiangsu Daming Metal Products Co., Ltd.	
Jiangsu Jihongxin Stainless Steel Co., Ltd.	
Jiaxing Winner Import and Export Co., Ltd.	
Jiaxing Zhongda Import and Export Co., Ltd.	
Jieyang Baowei Stainless Steel Co., Ltd.	
Jinyun Xinyongmao	
Jiuquan Iron & Steel (JISCO)	
Kuehne & Nagel, Ltd. (Ningbo)	
Lianzhong Stainless Steel Corp. (LISCO)	
Lu Qin (Hong Kong) Co., Ltd.	
Maanshan Sungood Machinery Equipment Co., Ltd.	
Minmetals Steel Co., Ltd.	
Nanhi Tengshao Metal Manufacturing Co.	
NB (Ningbo) Rilson Export & Import Corp.	
Ningbo Baoxin Stainless Steel Co., Ltd.	
Ningbo Bestco Import & Export Co., Ltd.	
Ningbo Bingcheng Import & Export Co., Ltd.	
Ningbo Chinaworld Grand Import & Export Co., Ltd.	
Ningbo Dawon Resources Co., Ltd.	
Ningbo Economic and Technological Development Zone (Beilun Xiapu)	
Ningbo Hog Slat Trading Co., Ltd.	
Ningbo New Hailong Import & Export Co.	
Ningbo Polaris Metal Products Co.	
Ningbo Portec Sealing Component	
Ningbo Qiyi Precision Metals Co., Ltd.	
Ningbo Seduno Import & Export Co., Ltd.	
Ningbo Sunico International Ltd.	
Ningbo Swoop Import & Export	
Ningbo Yaoyi International Trading Co., Ltd.	
Onetouch Business Service, Ltd.	
Qianyuan Stainless Steel	
Qingdao-Pohang Stainless Steel (QPSS)	
Qingdao Rising Sun International Trading Co., Ltd.	
Qingdao Sincerely Steel	
Rihong Stainless Co., Ltd.	
Ruitian Steel	
Samsung Precision Stainless Steel (Pinghu) Co., Ltd.	
Sejung Sea & Air Co., Ltd.	
Shandong Huaye Stainless Steel Group Co., Ltd.	
Shandong Mengyin Huarun Imp and Exp Co., Ltd.	
Shandong Mingwei Stainless Steel Products Co., Ltd.	
Shanghai Dongjing Import & Export Co.	
Shanghai Fengye Industry Co., Ltd.	
Shanghai Ganglian E-Commerce Holdings Co., Ltd.	

	Period to be reviewed
Shanghai Krupp Stainless (SKS)	
Shanghai Metal Corporation	
Shanghai Tankii Alloy Material Co., Ltd.	
Shanxi Taigang Stainless Steel Co., Ltd. (TISCO)	
Shaoxing Andrew Metal Manufactured Co., Ltd.	
Shenzhen Brilliant Sign Co., Ltd.	
Shaoxing Yuzhihang Import & Export Trade Co., Ltd.	
Shenzhen Wide International Trade Co., Ltd.	
Sichuan Southwest Stainless Steel	
Sichuan Tianhong Stainless Steel	
Sino Base Metal Co., Ltd.	
Suzhou Xinchen Precision Industrial Materials Co., Ltd.	
Taishan Steel	
Taiyuan Accu Point Technology, Co., Ltd.	
Taiyuan Iron & Steel (TISCO)	
Taiyuan Ridetaixing Precision Stainless Steel Incorporated Co., Ltd.	
Taizhou Durable Hardware Co., Ltd.	
Tiancheng Stainless Steel Products	
Tianjin Fulida Supply Co., Ltd.	
Tianjin Hongji Stainless Steel Products Co., Ltd.	
Tianjin Jiuyu Trade Co., Ltd.	
Tianjin Taigang Daming Metal Product Co., Ltd.	
Tianjin Teda Ganghua Trade Co., Ltd.	
Tianjin Tianchengjida Import & Export Trade Co., Ltd.	
Tianjin Tianguan Yuantong Stainless Steel	
TISCO Stainless Steel (HK), Ltd.	
Top Honest Stainless Steel Co., Ltd.	
TPCO Yuantong Stainless Steel Ware	
Tsingshan Qingyuan	
World Express Freight Co., Ltd.	
Wuxi Baochang Metal Products Co., Ltd.	
Wuxi Fangzhu Precision Materials Co.	
Wuxi Grand Tang Metal Co., Ltd.	
Wuxi Jinyate Steel Co., Ltd.	
Wuxi Joyray International Corp.	
Wuxi Shuoyang Stainless Steel Co., Ltd.	
Xiamen Lizhou Hardware Spring Co., Ltd.	
Xinwen Mining	
Henan Xuyuan Stainless Steel Co., Ltd.	
Yieh Corp., Ltd.	
Yongjin Metal Technology	
Yuyao Purenovo Stainless Steel Co., Ltd.	
Zhangjiagang Pohang Stainless Steel Co., Ltd. (ZPSS)	
Zhejiang Baohong Stainless Steel Co., Ltd.	
Zhejiang Huashun Metals Co., Ltd.	
Zhejiang Jaguar Import & Export Co., Ltd.	
Zhejiang New Vision Import & Export	
Zhejiang Yongjin Metal Technology Co., Ltd.	
Zhengzhou Mingtai Industry Co., Ltd.	
Zhenjiang Huaxin Import & Export	
Zhenjiang Yongyin Metal Tech Co.	
Zhenshi Group Eastern Special Steel Co., Ltd.	
Zun Hua City Transcend Ti-Gold	

Suspension Agreements

None.

Duty Absorption Reviews

During any administrative review covering all or part of a period falling between the first and second or third and fourth anniversary of the publication of an AD order under 19 CFR 351.211 or a determination under 19 CFR 351.218(f)(4) to continue an order or suspended investigation (after sunset review), Commerce, if requested by a domestic interested party within 30 days of the date of publication of the notice of initiation of the review, will determine whether AD duties have been absorbed by an exporter or producer subject to the review if the subject merchandise is sold in the United States through an importer that is affiliated with such exporter or producer. The request must include the name(s) of the exporter or producer for which the inquiry is requested.

Gap Period Liquidation

For the first administrative review of any order, there will be no assessment of antidumping or countervailing duties on entries of subject merchandise entered, or withdrawn from warehouse, for consumption during the relevant ''gap'' period of the order (*i.e.,* the period following the expiry of provisional measures and before

[5] In past reviews, Commerce has treated these companies as a single entity. *See, e.g., Certain Activated Carbon From the People's Republic of China: Final Results of Antidumping Duty Administrative Review; 2017–2018.* We also received a review request for Jacobi Carbons, Inc., however, Jacobi Carbons, Inc. is a U.S. affiliate of Jacobi Carbons AB.

definitive measures were put into place), if such a gap period is applicable to the POR.

Administrative Protective Orders and Letters of Appearance

Interested parties must submit applications for disclosure under administrative protective orders in accordance with the procedures outlined in Commerce's regulations at 19 CFR 351.305. Those procedures apply to administrative reviews included in this notice of initiation. Parties wishing to participate in any of these administrative reviews should ensure that they meet the requirements of these procedures (*e.g.,* the filing of separate letters of appearance as discussed at 19 CFR 351.103(d)).

Factual Information Requirements

Commerce's regulations identify five categories of factual information in 19 CFR 351.102(b)(21), which are summarized as follows: (i) Evidence submitted in response to questionnaires; (ii) evidence submitted in support of allegations; (iii) publicly available information to value factors under 19 CFR 351.408(c) or to measure the adequacy of remuneration under 19 CFR 351.511(a)(2); (iv) evidence placed on the record by Commerce; and (v) evidence other than factual information described in (i)–(iv). These regulations require any party, when submitting factual information, to specify under which subsection of 19 CFR 351.102(b)(21) the information is being submitted and, if the information is submitted to rebut, clarify, or correct factual information already on the record, to provide an explanation identifying the information already on the record that the factual information seeks to rebut, clarify, or correct. The regulations, at 19 CFR 351.301, also provide specific time limits for such factual submissions based on the type of factual information being submitted. Please review the *Final Rule,*[6] available at *https://enforcement.trade.gov/frn/2013/1304frn/2013-08227.txt,* prior to submitting factual information in this segment. Note that Commerce has temporarily modified certain of its requirements for serving documents containing business proprietary information, until July 17, 2020, unless extended.[7]

Any party submitting factual information in an AD or CVD proceeding must certify to the accuracy and completeness of that information using the formats provided at the end of the *Final Rule.*[8] Commerce intends to reject factual submissions in any proceeding segments if the submitting party does not comply with applicable certification requirements.

Extension of Time Limits Regulation

Parties may request an extension of time limits before a time limit established under Part 351 expires, or as otherwise specified by Commerce.[9] In general, an extension request will be considered untimely if it is filed after the time limit established under Part 351 expires. For submissions which are due from multiple parties simultaneously, an extension request will be considered untimely if it is filed after 10:00 a.m. on the due date. Examples include, but are not limited to: (1) Case and rebuttal briefs, filed pursuant to 19 CFR 351.309; (2) factual information to value factors under 19 CFR 351.408(c), or to measure the adequacy of remuneration under 19 CFR 351.511(a)(2), filed pursuant to 19 CFR 351.301(c)(3) and rebuttal, clarification and correction filed pursuant to 19 CFR 351.301(c)(3)(iv); (3) comments concerning the selection of a surrogate country and surrogate values and rebuttal; (4) comments concerning CBP data; and (5) Q&V questionnaires. Under certain circumstances, Commerce may elect to specify a different time limit by which extension requests will be considered untimely for submissions which are due from multiple parties simultaneously. In such a case, Commerce will inform parties in the letter or memorandum setting forth the deadline (including a specified time) by which extension requests must be filed to be considered timely. This policy also requires that an extension request must be made in a separate, stand-alone submission, and clarifies the circumstances under which Commerce will grant untimely-filed requests for the extension of time limits. Please review the *Final Rule,* available at *https://www.gpo.gov/fdsys/pkg/FR-2013-09-20/html/2013-22853.htm,* prior to submitting factual information in these segments.

These initiations and this notice are in accordance with section 751(a) of the Act (19 U.S.C. 1675(a)) and 19 CFR 351.221(c)(1)(i).

Dated: May 29, 2020.

James Maeder,

Deputy Assistant Secretary for Antidumping and Countervailing Duty Operations.

[FR Doc. 2020–12260 Filed 6–5–20; 8:45 am]

BILLING CODE 3510–DS–P

[6] *See Certification of Factual Information To Import Administration During Antidumping and Countervailing Duty Proceedings,* 78 FR 42678 (July 17, 2013) (*Final Rule*); *see also* the frequently asked questions regarding the *Final Rule,* available at *https://enforcement.trade.gov/tlei/notices/factual_info_final_rule_FAQ_07172013.pdf.*

[7] *See Temporary Rule Modifying AD/CVD Service Requirements Due to COVID–19,* 85 FR 29615 (May 18, 2020).

[8] *See* section 782(b) of the Act; *see also Final Rule;* and the frequently asked questions regarding the *Final Rule,* available at *https://enforcement.trade.gov/tlei/notices/factual_info_final_rule_FAQ_07172013.pdf.*

[9] *See* 19 CFR 351.302.

DEPARTMENT OF COMMERCE

National Oceanic and Atmospheric Administration

[RTID 0648–XQ010]

Virtual Meeting of the Advisory Committee to the U.S. Section to the International Commission for the Conservation of Atlantic Tunas' (ICCAT) Species Working Groups

AGENCY: National Marine Fisheries Service (NMFS), National Oceanic and Atmospheric Administration (NOAA), Commerce.

ACTION: Notice of Advisory Committee's Species Working Group meetings.

SUMMARY: The Advisory Committee (Committee) to the U.S. Section to the International Commission for the Conservation of Atlantic Tunas (ICCAT) announces two upcoming open session virtual meetings of its Species Working Groups, to be held June 22 and June 25, 2020.

DATES: The Species Working Groups will meet in two open sessions, on June 22, 2020, 1 p.m. to 4 p.m. and June 25, 2020, 2:30 p.m. to 4:30 p.m. The Species Working Groups will separately convene several closed session meetings, which will take place between June 22 and June 24, 2020, and are not open to the public.

ADDRESSES: Please register to attend the virtual meeting at *https://forms.gle/JPjSkcxBVFdfXjzy7.* Instructions will be emailed to registered meeting participants before the meetings occur.

FOR FURTHER INFORMATION CONTACT: Terra Lederhouse at *Terra.Lederhouse@noaa.gov.*

SUPPLEMENTARY INFORMATION: The Advisory Committee to the U.S. Section to ICCAT will meet in open session to receive and discuss information on NMFS research and monitoring activities and the results of the meetings of the Committee's Species Working Groups. The public will have access to the open sessions of the meeting. There will be no virtual session for public

comment but the Species Working Groups will review any comments submitted in writing for its consideration. The agenda is available from the Committee's Executive Secretary upon request (see **FOR FURTHER INFORMATION CONTACT**).

The Committee will convene separate closed session Species Working Groups between June 22 and June 24, 2020. These sessions are not open to the public, but the results of the Species Working Group discussions will be reported to the full Advisory Committee during the Committee's open session on June 25, 2020.

Special Accommodations

Requests for sign language interpretation or other auxiliary aids should be directed to Terra Lederhouse at *Terra.Lederhouse@noaa.gov* at least 5 days prior to the meeting date.

Dated: June 3, 2020.

Alexa Cole,

Director, Office of International Affairs and Seafood Inspection, National Marine Fisheries Service.

[FR Doc. 2020–12354 Filed 6–5–20; 8:45 am]

BILLING CODE 3510–22–P

DEPARTMENT OF COMMERCE

National Oceanic and Atmospheric Administration

Federal Consistency Appeal by WesternGeco of South Carolina Objection

AGENCY: National Oceanic and Atmospheric Administration (NOAA), Department of Commerce (DOC).

ACTION: Notice of reopening and of closure—administrative appeal decision record.

SUMMARY: This announcement provides notice that the decision record has reopened on June 5, 2020, and closed on June 5, 2020, for an administrative appeal filed by WesternGeco (Appellant) under the Coastal Zone Management Act requesting that the Secretary of Commerce (Secretary) override an objection by the South Carolina Department of Health and Environmental Control to a consistency certification for a proposed project to conduct a marine Geological and Geophysical seismic survey in the Atlantic Ocean.

DATES: The decision record for WesternGeco's Federal Consistency Appeal of South Carolina's objection reopened and closed on June 5, 2020.

ADDRESSES: NOAA has provided access to publicly available materials and related documents comprising the appeal record on the following website: *http://www.regulations.gov/#!docketDetail;D=NOAA-HQ-2019-0118.*

FOR FURTHER INFORMATION CONTACT: For questions about this Notice, contact Jonelle Dilley, NOAA Office of General Counsel, Oceans and Coasts Section, 1305 East-West Highway, Room 6111, Silver Spring, MD 20910, (301) 713–7383, *jonelle.dilley@noaa.gov.*

SUPPLEMENTARY INFORMATION: On September 20, 2019, the Secretary received a ''Notice of Appeal'' filed by WesternGeco pursuant to the Coastal Zone Management Act of 1972 (CZMA), 16 U.S.C. 1451 *et seq.,* and implementing regulations found at 15 CFR part 930, subpart H. The ''Notice of Appeal'' is taken from an objection by the South Carolina Department of Health and Environmental Control to a consistency certification for a proposed project to conduct a marine Geological and Geophysical seismic survey in the Atlantic Ocean. This matter constitutes an appeal of an ''energy project'' within the meaning of the CZMA regulations, *see* 15 CFR 930.123(c).

Under the CZMA, the Secretary may override South Carolina's objection on grounds that the project is consistent with the objectives or purposes of the CZMA, or is necessary in the interest of national security. To make the determination that the proposed activity is ''consistent with the objectives or purposes of the CZMA,'' the Department must find that: (1) The proposed activity furthers the national interest as articulated in sections 302 or 303 of the CZMA, in a significant or substantial manner; (2) the national interest furthered by the proposed activity outweighs the activity's adverse coastal effects, when those effects are considered separately or cumulatively; and (3) no reasonable alternative is available that would permit the proposed activity to be conducted in a manner consistent with the enforceable policies of the applicable coastal management program. 15 CFR 930.121. To make the determination that the proposed activity is ''necessary in the interest of national security,'' the Secretary must find that a national defense or other national security interest would be significantly impaired if the proposed activity is not permitted to go forward as proposed. 15 CFR 930.122.

The Secretary must close the decision record in a federal consistency appeal 160 days after the Notice of Appeal is published in the **Federal Register**. 15 CFR 930.130(a)(1). However, the CZMA authorizes the Secretary to stay closing the decision record for up to 60 days when the Secretary determines it necessary to receive, on an expedited basis, any supplemental information specifically requested by the Secretary to complete a consistency review or any clarifying information submitted by a party to the proceeding related to information in the consolidated record compiled by the lead Federal permitting agency. 15 CFR 930.130(a)(2), (3). In order to solicit supplemental and clarifying information from the Bureau of Ocean Energy Management pertaining to the withholding of certain information as proprietary, the Secretary stayed the closure of the decision record on two occasions for a total of 28 days. 85 FR 17538 (March 30, 2020); 85 FR 20475 (April 13, 2020). On April 27, 2020, NOAA published a **Federal Register** Notice announcing closure of the appeal decision record. 85 FR 23328.

On May 14, 2020, South Carolina submitted to NOAA a request to reopen the record so that South Carolina may provide a supplemental document in response to two documents added to the appeal record on March 30, 2020. On May 18, 2020, WesternGeco filed an opposition to South Carolina's motion, and, in the alternative, moved to supplement the record with one additional document. On June 5, 2020, NOAA issued an Order in the appeal determining that a limited reopening of the appeal decision record was necessary to receive supplemental or clarifying information that either of the parties may submit regarding the two record documents added on March 30, 2020.

Consistent with the above schedule, the decision record for WesternGeco's federal consistency appeal of South Carolina's objection reopened on June 5, 2020, for NOAA to receive supplemental record material, and it closed on June 5, 2020. No further information or briefs will be considered in deciding this appeal.

Public Availability of Appeal Documents

NOAA has provided access to publicly available materials and related documents comprising the appeal record on the following website: *http://www.regulations.gov/#!docketDetail;D=NOAA-HQ-2019-0118.*

Authority: 15 CFR 930.130(a)(2), (3).

Adam Dilts,

Chief, Oceans and Coasts Section, NOAA Office of General Counsel.

[FR Doc. 2020–12263 Filed 6–5–20; 8:45 am]

BILLING CODE 3510–JE–P

DEPARTMENT OF COMMERCE

National Oceanic and Atmospheric Administration

Federal Consistency Appeal by WesternGeco of North Carolina Objection

AGENCY: National Oceanic and Atmospheric Administration (NOAA), Department of Commerce (DOC).

ACTION: Notice of reopening and of closure—administrative appeal decision record.

SUMMARY: This announcement provides notice that the decision record reopened on June 5, 2020, and closed on June 5, 2020, for an administrative appeal filed with the Department of Commerce (Department) by WesternGeco requesting that the Secretary of Commerce (Secretary) override an objection by the North Carolina Division of Coastal Management to a consistency certification for a proposed project to conduct a marine Geological and Geophysical seismic survey in the Atlantic Ocean.

DATES: The decision record for WesternGeco's federal consistency appeal of North Carolina's objection reopened on June 5, 2020, and closed on June 5, 2020.

ADDRESSES: NOAA has provided access to publicly available materials and related documents comprising the appeal record on the following website: *http://www.regulations.gov/#!docketDetail;D=NOAA-HQ-2019-0089.*

FOR FURTHER INFORMATION CONTACT: For questions about this Notice, contact Martha McCoy, NOAA Office of General Counsel, Oceans and Coasts Section, 1305 East-West Highway, Room 6111, Silver Spring, MD 20910, (301) 713–7391, *martha.mccoy@noaa.gov.*

SUPPLEMENTARY INFORMATION:

I. Notice of Appeal

On September 20, 2019, the Secretary received a ''Notice of Appeal'' filed by WesternGeco pursuant to the Coastal Zone Management Act of 1972 (CZMA), 16 U.S.C. 1451 *et seq.,* and implementing regulations found at 15 CFR part 930, subpart H. The ''Notice of Appeal'' is taken from an objection by the North Carolina Division of Coastal Management to a consistency certification for a proposed project to conduct a marine Geological and Geophysical seismic survey in the Atlantic Ocean. This matter constitutes an appeal of an ''energy project'' within the meaning of the CZMA regulations, *see* 15 CFR 930.123(c).

Under the CZMA, the Secretary may override the North Carolina Division of Coastal Management's objection on grounds that the project is consistent with the objectives or purposes of the CZMA, or is necessary in the interest of national security. To make the determination that the proposed activity is ''consistent with the objectives or purposes of the CZMA,'' the Department must find that: (1) The proposed activity furthers the national interest as articulated in sections 302 or 303 of the CZMA, in a significant or substantial manner; (2) the national interest furthered by the proposed activity outweighs the activity's adverse coastal effects, when those effects are considered separately or cumulatively; and (3) no reasonable alternative is available that would permit the proposed activity to be conducted in a manner consistent with the enforceable policies of the applicable coastal management program. 15 CFR 930.121. To make the determination that the proposed activity is ''necessary in the interest of national security,'' the Secretary must find that a national defense or other national security interest would be significantly impaired if the proposed activity is not permitted to go forward as proposed. 15 CFR 930.122.

The Secretary must close the decision record in a federal consistency appeal 160 days after the Notice of Appeal is published in the **Federal Register**. 15 CFR 930.130(a)(1). However, the CZMA authorizes the Secretary to stay closing the decision record for up to 60 days when the Secretary determines it necessary to receive, on an expedited basis, any supplemental information specifically requested by the Secretary to complete a consistency review or any clarifying information submitted by a party to the proceeding related to information in the consolidated record compiled by the lead Federal permitting agency. 15 CFR 930.130(a).

On March 30, 2020, NOAA published a **Federal Register** Notice announcing closure of the appeal decision record. 85 FR 17539. On April 29, 2020, North Carolina submitted to NOAA a request to reopen the record so that North Carolina may provide a supplemental document in response to two documents added to the appeal record on March 30, 2020. On May 5, 2020, NOAA issued an Order in the appeal determining that a limited reopening of the appeal decision record was (1) appropriate to ensure efficiency and fairness to the parties and (2) necessary to receive supplemental or clarifying information that either of the parties may submit regarding the two record documents added on March 30, 2020.

Consistent with the above schedule, the decision record for WesternGeco's federal consistency appeal of North Carolina's objection reopened on June 5, 2020, for NOAA to receive supplemental record material, and it closed on June 5, 2020. No further information or briefs will be considered in deciding this appeal.

II. Public Availability of Appeal Record

NOAA has provided access to publicly available materials and related documents comprising the appeal record on the following website: *http://www.regulations.gov/#!docketDetail;D=NOAA-HQ-2019-0089.*

Authority: 15 CFR 930.130(a).

Adam Dilts,

Chief, Oceans and Coasts Section, NOAA Office of General Counsel.

[FR Doc. 2020–12264 Filed 6–5–20; 8:45 am]

BILLING CODE 3510–JE–P

DEPARTMENT OF COMMERCE

National Oceanic and Atmospheric Administration

National Sea Grant Advisory Board (Board); Public Meeting of the National Sea Grant Advisory Board

AGENCY: National Oceanic and Atmospheric Administration (NOAA), Office of Oceanic and Atmospheric Research (OAR), Department of Commerce (DOC).

ACTION: Notice of public meeting.

SUMMARY: This notice sets forth the schedule and proposed agenda of a forthcoming meeting of the National Sea Grant Advisory Board (Board). Board members will discuss and provide advice on the National Sea Grant College Program (Sea Grant) in the areas of program evaluation, strategic planning, education and extension, science and technology programs, and other matters as described in the agenda found on the Sea Grant website.

DATES: The announced meeting is scheduled for Tuesday June 23, 2020 from 3:00 p.m.–5:00 p.m. Eastern Time.

ADDRESSES: The meeting will be held virtually only. For more information and for virtual access see below in the **FOR FURTHER INFORMATION CONTACT** section.

Status: The meeting will be open to public participation with a 15-minute public comment period on Tuesday, June 23 from 3:15 p.m.–3:30 p.m. Eastern Time. (Check agenda using the

link in the Matters to be Considered section to confirm time.) The Board expects that public statements presented at its meetings will not be repetitive of previously submitted verbal or written statements. In general, each individual or group making a verbal presentation will be limited to a total time of three (3) minutes. Written comments should be received by Ms. Donna Brown by Thursday, June 18, 2020 to provide sufficient time for Board review. Written comments received after the deadline will be distributed to the Board, but may not be reviewed prior to the meeting date.

FOR FURTHER INFORMATION CONTACT: For any questions concerning the meeting, please contact Ms. Donna Brown, National Sea Grant College Program, National Oceanic and Atmospheric Administration, 1315 East-West Highway, SSMC3, Room 11717, Silver Spring, Maryland 20910. Phone Number: 301–734–1088, Fax Number: 301–713–1031, Email: *Donna.Brown@noaa.gov*). To attend via webinar, please R.S.V.P to Donna Brown (contact information above) by Thursday, June 18, 2020.

Special Accommodations: The Board meeting is virtually accessible to people with disabilities. Requests for sign language interpretation or other auxiliary aids should be directed to Ms. Donna Brown by Thursday, June 18, 2020.

SUPPLEMENTARY INFORMATION: The Board, which consists of a balanced representation from academia, industry, state government and citizens groups, was established in 1976 by Section 209 of the Sea Grant Improvement Act (Pub. L. 94–461, 33 U.S.C. 1128). The Board advises the Secretary of Commerce and the Director of the National Sea Grant College Program with respect to operations under the Act, and such other matters as the Secretary refers to them for review and advice.

Matters to be Considered: Board members will discuss and vote on two decisional matters—the 2020 Biennial Report to Congress text and the Evaluation Committee reports on the state Sea Grant program quadrennial review. *http://seagrant.noaa.gov/WhoWeAre/Leadership/NationalSeaGrantAdvisoryBoard/UpcomingAdvisoryBoardMeetings.aspx*.

Dated: May 18, 2020.

Eric Locklear,

Deputy Chief Financial Officer/Administrative Officer, Office of Oceanic and Atmospheric Research, National Oceanic and Atmospheric Administration.

[FR Doc. 2020–12269 Filed 6–5–20; 8:45 am]

BILLING CODE 3510–KA–P

DEPARTMENT OF COMMERCE

National Technical Information Service

National Technical Information Service Advisory Board

AGENCY: National Technical Information Service, Commerce.

ACTION: Notice of open meeting.

SUMMARY: This notice announces the next meeting of the National Technical Information Service (NTIS) Advisory Board (the Advisory Board).

DATES: The Advisory Board will meet on Monday, June 29, 2020 from 1:00 p.m. to approximately 4:30 p.m., Eastern Time, via teleconference.

ADDRESSES: The Advisory Board meeting will be via teleconference. Please note attendance instructions under the **SUPPLEMENTARY INFORMATION** section of this notice.

FOR FURTHER INFORMATION CONTACT: Mr. Daniel Ramsey, (703) 605–6703, *DRamsey@ntis.gov.*

SUPPLEMENTARY INFORMATION: The Advisory Board is established by Section 3704b(c) of Title 15 of the United States Code. The charter has been filed in accordance with the requirements of the Federal Advisory Committee Act, as amended (5 U.S.C. App.). The Advisory Board reviews and makes recommendations to improve NTIS programs, operations, and general policies in support of NTIS' mission to advance Federal data priorities, promote economic growth, and enable operational excellence by providing innovative data services to Federal agencies through joint venture partnerships with the private sector.

The meeting will focus on a review of the progress NTIS has made in implementing its data mission and strategic direction. A final agenda and summary of the proceedings will be posted on the NTIS website as soon as they are available (*http://www.ntis.gov/about/advisorybd.aspx*).

The teleconference will be via controlled access. Members of the public interested in attending via teleconference or speaking are requested to contact Mr. Ramsey at the contact information listed in the **FOR FURTHER INFORMATION CONTACT** section above not later than Friday, June 19, 2020. If there are sufficient expressions of interest, up to one-half hour will be reserved for public oral comments during the session. Speakers will be selected on a first-come, first-served basis. Each speaker will be limited to five minutes. Questions from the public will not be considered during this period. Speakers who wish to expand upon their oral statements, those who had wished to speak but could not be accommodated on the agenda, and those who were unable to attend are invited to submit written statements by emailing Mr. Ramsey at the email address provided in the **FOR FURTHER INFORMATION CONTACT** section above.

Dated: June 3, 2020.

Gregory Capella,

Deputy Director.

[FR Doc. 2020–12337 Filed 6–5–20; 8:45 am]

BILLING CODE 3510–04–P

DEPARTMENT OF DEFENSE

Office of the Secretary

[Docket ID DOD–2020–OS–0057]

Privacy Act of 1974; System of Records

AGENCY: National Reconnaissance Office (NRO), Department of Defense (DoD).

ACTION: Rescindment of a System of Records Notice (SORN).

SUMMARY: The NRO is rescinding a Privacy Act System of Records, ''QNRO–30, Technology Fellowship and Enrichment Programs and Events.'' This System of Records maintained information on controlling and tracking access for NRO Technology Fellowship and Enrichment Program participants to NRO networks, computer systems, and information technology databases. The System of Records also enabled information systems security officers to access, review, and grant requests for the creation, deletion, or transfer of network accounts to Program participants. The NRO Technology Fellowship and Enrichment Program was discontinued and the supporting information system decommissioned. The records from that system have been destroyed in accordance with the record retention and disposal policy as specified in the SORN.

DATES: This System of Records rescindment is applicable upon publication in the **Federal Register**.

FOR FURTHER INFORMATION CONTACT: Mr. Mike Lavergne, NRO, Advanced Systems and Technology Directorate, 14675 Lee Road, Chantilly, VA 20151–

1715 or by phone at (703) 227–9022 or email, *lavergnm@nro.mil.*

SUPPLEMENTARY INFORMATION: The NRO Technology Fellowship and Enrichment Program was discontinued. Following the decommissioning of the information system, all records were destroyed in accordance with the records retention and disposal policies as published in the SORN.

The DoD notices for Systems of Records subject to the Privacy Act of 1974 (5 U.S.C. 552a), as amended, have been published in the **Federal Register** and are available from the address in **FOR FURTHER INFORMATION CONTACT** or at the Defense Privacy, Civil Liberties and Transparency Division website at *https://dpcld.defense.gov.*

The proposed system reports, as required by the Privacy Act, as amended, were submitted on May 18, 2020, to the House Committee on Oversight and Reform, the Senate Committee on Homeland Security and Governmental Affairs, and the Office of Management and Budget (OMB) pursuant to Section 6 of OMB Circular No. A–108, ''Federal Agency Responsibilities for Review, Reporting, and Publication under the Privacy Act,'' revised December 23, 2016 (December 23, 2016, 81 FR 94424).

SYSTEM NAME AND NUMBER:

Technology Fellowship and Enrichment Programs and Events, QNRO–30.

HISTORY:

May 19, 2008, 73 FR 28801.

Dated: June 2, 2020.

Aaron T. Siegel,

Alternate OSD Federal Register Liaison Officer, Department of Defense.

[FR Doc. 2020–12296 Filed 6–5–20; 8:45 am]

BILLING CODE 5001–06–P

DEPARTMENT OF DEFENSE

Office of the Secretary

Department of Defense Board of Actuaries; Notice of Federal Advisory Committee Meeting

AGENCY: Under Secretary of Defense for Personnel and Readiness, Department of Defense (DoD).

ACTION: Notice of Federal Advisory Committee meeting.

SUMMARY: The DoD is publishing this notice to announce that the following Federal Advisory Committee meeting of the Department of Defense Board of Actuaries will take place.

DATES: Open Board meeting from 10:00 a.m. to 1:00 p.m. on Friday, June 26, 2020.

ADDRESSES: This meeting will be held virtually. For information regarding how to access the meeting, please contact Kathleen Ludwig, (703) 653–4758 or *Kathleen.A.Ludwig.civ@mail.mil* after June 12, 2020.

FOR FURTHER INFORMATION CONTACT: Inger Pettygrove, (703) 225–8803 (Voice), (571) 372–1975 (Facsimile), *inger.m.pettygrove.civ@mail.mil* (Email). Mailing address is Defense Human Resources Activity, DoD Office of the Actuary, 4800 Mark Center Drive, STE 03E25, Alexandria, VA 22350–8000. Website: *http://actuary.defense.gov/*. The most up-to-date changes to the meeting agenda can be found on the website.

SUPPLEMENTARY INFORMATION: This meeting is being held under the provisions of the Federal Advisory Committee Act (FACA) of 1972 (5 U.S.C., Appendix, as amended), the Government in the Sunshine Act of 1976 (5 U.S.C. 552b, as amended), and 41 CFR 102–3.140 and 102–3.150.

Purpose of the Meeting: The purpose of the meeting is for the Board to review DoD actuarial methods and assumptions to be used in the valuations of the Education Benefits Fund, the Military Retirement Fund, and the Voluntary Separation Incentive Fund, in accordance with the provisions of Section 183, Section 2006, Chapter 74 (10 U.S.C. 1464 *et seq.*), and 10 U.S.C. 1175.

Agenda

Military Retirement Fund/VSI Fund

1. Recent and Proposed Legislation
2. Briefing on Investment Experience
3. September 30, 2019, Valuation of the Military Retirement Fund *
4. Proposed Methods and Assumptions for September 30, 2020, Valuation of the Military Retirement Fund *
5. Proposed Methods and Assumptions for September 30, 2019, VSI Fund Valuation *

Education Benefits Fund

1. Fund Overview
2. Briefing on Investment Experience
3. September 30, 2019, Valuation Proposed Economic Assumptions *
4. September 30, 2019, Valuation Proposed Methods and Assumptions—Reserve Programs *
5. September 30, 2019, Valuation Proposed Methods and Assumptions—Active Duty Programs *
6. Developments in Education Benefits

* Board approval required

Meeting Accessibility: Pursuant to 5 U.S.C. 552b and 41 CFR 102–3.140 through 102–3.165, this meeting is open to the public.

Written Statements: Persons desiring to attend the DoD Board of Actuaries meeting or make an oral presentation or submit a written statement for consideration at the meeting must notify Kathleen Ludwig at (703) 653–4758, or *Kathleen.A.Ludwig.civ@mail.mil,* by June 12, 2020.

Dated: June 2, 2020.

Aaron T. Siegel,

Alternate OSD Federal Register Liaison Officer, Department of Defense.

[FR Doc. 2020–12292 Filed 6–5–20; 8:45 am]

BILLING CODE 5001–06–P

DEPARTMENT OF THE DEFENSE

Department of the Army, Corps of Engineers

Withdrawal of the Notice of Intent To Prepare an Environmental Impact Statement for the Nassau County Back Bay Coastal Storm Risk Management Feasibility Study

AGENCY: U.S. Army Corps of Engineers, DoD.

ACTION: Notice of intent; withdrawal.

SUMMARY: The U.S. Army Corps of Engineers, Philadelphia District, Planning Division is notifying interested parties that it has withdrawn the Notice of Intent (NOI) to develop an environmental impact statement (EIS) for the proposed Nassau County Back Bay (NCBB) Coastal Storm Risk Management (CSRM) Feasibility Study. The original NOI to prepare an EIS was published in the **Federal Register** on Friday, April 21, 2017. An Environmental Assessment (EA) will be prepared instead of an EIS.

DATES: The notice of intent to prepare an EIS published in the **Federal Register** on April 21, 2017 (82 FR 18746), is withdrawn as of June 8, 2020.

ADDRESSES: U.S. Army Corps of Engineers, Philadelphia District, Environmental Resources Branch, (CENAP–PL–E), 100 Penn Square East, Wanamaker Building, Philadelphia, PA 19107–3390.

FOR FURTHER INFORMATION CONTACT: Questions regarding the withdrawal of this NOI should be addressed to Ms. Angela Sowers, 410–962–7440, or *angela.sowers@usace.army.mil.*

SUPPLEMENTARY INFORMATION: On March 20, 2018, the Office of Management and Budget (OMB) and the Council on

Environmental Quality (CEQ) issued an OMB/CEQ Memorandum for Heads of Federal Departments and Agencies titled ''One Federal Decision Framework for the Environmental Review and Authorization Process for Major Infrastructure Projects under Executive Order [E.O.] 13807.'' Additionally, twelve Federal agencies, including Department of the Army, signed a Memorandum of Understanding (MOU) as an appendix to the OMB/CEQ Memorandum. The MOU is titled ''Memorandum of Understanding Implementing One Federal Decision Under Executive Order 13807'' and was effective on April 10, 2018. E.O. 13807 sets a goal for agencies by reducing the time for completing environmental reviews and authorization decisions to an agency average of not more than two years from publication of a NOI to prepare an EIS.

Subsequent to the publication of the NOI, the NCBB CSRM Feasibility Study was granted an exemption from the requirement to complete the feasibility study within 3 years, as required in Section 1001(a) of the Water Resources Reform and Development Act of 2014. This exemption was granted on 5 February 2020. Therefore, in order to align the revised study schedule with E.O. 13807, it is necessary to withdraw the existing NOI to develop and re-scope a NEPA coordination/review schedule with the appropriate Federal and state resource agencies that have statutory jurisdiction over the review process for any action being contemplated in the course of the feasibility study and development of an environmental impact statement. The exemption was contingent on reducing the scope of the study to focus on critical infrastructure and highly vulnerable areas outside of Coastal Barrier Resources Act units. Due to the resulting limited scope, it is appropriate at this time to prepare an EA rather than an EIS. Should information be identified during the study to support the need for an EIS, a NOI will be issued at a future time. Public, agency and stakeholder comments and feedback will continue to be accepted during the re-scoping of the NEPA review schedule.

Dated: June 2, 2020.

Karen J. Baker,

Programs Director, North Atlantic Division.

[FR Doc. 2020–12309 Filed 6–5–20; 8:45 am]

BILLING CODE 3720–58–P

DEPARTMENT OF ENERGY

[OE Docket No. EA–182–E]

Application To Export Electric Energy; H.Q. Energy Services (U.S) Inc.

AGENCY: Office of Electricity, Department of Energy.

ACTION: Notice of application.

SUMMARY: H.Q. Energy Services (U.S.) Inc. (Applicant or HQUS) has applied for authorization to transmit electric energy from the United States to Canada pursuant to the Federal Power Act.

DATES: Comments, protests, or motions to intervene must be submitted on or before July 8, 2020.

ADDRESSES: Comments, protests, motions to intervene, or requests for more information should be addressed by electronic mail to *Electricity.Exports@hq.doe.gov,* or by facsimile to (202) 586–8008.

SUPPLEMENTARY INFORMATION: The Department of Energy (DOE) regulates exports of electricity from the United States to a foreign country, pursuant to sections 301(b) and 402(f) of the Department of Energy Organization Act (42 U.S.C. 7151(b) and 42 U.S.C. 7172(f)). Such exports require authorization under section 202(e) of the Federal Power Act (16 U.S.C. 824a(e)).

On August 18, 2015, DOE issued Order No. EA–182–D, which authorized HQUS to transmit electric energy from the United States to Canada as a power marketer for a five-year term using existing international transmission facilities appropriate for open access. This authorization expires on August 21, 2020. On June 1, 2020, HQUS filed an application (Application or App.) with DOE for renewal of the export authorization contained in Order No. EA–182–D.

HQUS says its principal place of business is in Hartford, Connecticut, and that it ''is a wholly-owned subsidiary and the marketing arm of Hydro-Quebec Production, a division of Hydro-Quebec.'' *See* App. at 1. HQUS adds that it ''does not own or operate any facilities for the generation, transmission or distribution of electricity in the United States or any other country, and neither HQUS nor any of its affiliates has a franchise or service territory for the transmission, distribution or sale of electricity in the United States.'' *Id.* at 2.

HQUS further states that it ''will purchase the power to be exported from a variety of sources such as power marketers, independent power producers or U.S. electric utilities and Federal power marketing agencies.'' App. at 3. HQUS contends that its proposed exports ''will not impair the sufficiency of the electric power supply within the United States.'' *Id.*

The existing international transmission facilities to be utilized by the Applicant have previously been authorized by Presidential permits issued pursuant to Executive Order 10485, as amended, and are appropriate for open access transmission by third parties.

Procedural Matters: Any person desiring to be heard in this proceeding should file a comment or protest to the Application at the address provided above. Protests should be filed in accordance with Rule 211 of the Federal Energy Regulatory Commission's (FERC) Rules of Practice and Procedure (18 CFR 385.211). Any person desiring to become a party to this proceeding should file a motion to intervene at the above address in accordance with FERC Rule 214 (18 CFR 385.214).

Comments and other filings concerning HQUS's Application should be clearly marked with OE Docket No. EA–182–E. Additional copies are to be provided directly to Hélène Cossette, 4th Floor, 75, boul. René-Lévesque Ouest, Montréal, Québec H2Z 1A4, Canada, *Cossette.Helene@hydro.qc.ca;* and Jerry L. Pfeffer, 1440 New York Avenue, NW, Washington, DC 20005, *jerry.pfeffer@skadden.com.*

A final decision will be made on this Application after the environmental impacts have been evaluated pursuant to DOE's National Environmental Policy Act Implementing Procedures (10 CFR part 1021) and after DOE determines that the proposed action will not have an adverse impact on the sufficiency of supply or reliability of the U.S. electric power supply system.

Copies of this Application will be made available, upon request, by accessing the program website at *http://energy.gov/node/11845,* or by emailing Matthew Aronoff at *matthew.aronoff@hq.doe.gov.*

Signed in Washington, DC, on June 2, 2020.

Christopher Lawrence,

Management and Program Analyst, Transmission Permitting and Technical Assistance, Office of Electricity.

[FR Doc. 2020–12311 Filed 6–5–20; 8:45 am]

BILLING CODE 6450–01–P

DEPARTMENT OF ENERGY

Federal Energy Regulatory Commission

[Docket No. EL20–51–000]

Southern California Edison Company; Notice of Petition for Declaratory Order

Take notice that on June 1, 2020, pursuant to Rule 207 of the Federal Energy Regulatory Commission's (Commission) Rules of Practice and Procedure, 18 CFR 385.207, Southern California Edison Company (Petitioner), filed a petition for a declaratory order requesting that the Commission grant the rate incentives in connection with the Riverside Transmission Reliability Project, as more fully explained in the petition.

Any person desiring to intervene or to protest this filing must file in accordance with Rules 211 and 214 of the Commission's Rules of Practice and Procedure (18 CFR 385.211, 385.214). Protests will be considered by the Commission in determining the appropriate action to be taken, but will not serve to make protestants parties to the proceeding. Any person wishing to become a party must file a notice of intervention or motion to intervene, as appropriate. Such notices, motions, or protests must be filed on or before the comment date. Anyone filing a motion to intervene or protest must serve a copy of that document on the Petitioner.

The Commission strongly encourages electronic filings of comments, protests and interventions in lieu of paper using the eFiling link at *http://www.ferc.gov.* Persons unable to file electronically may mail similar pleadings to the Federal Energy Regulatory Commission, 888 First Street NE, Washington, DC 20426. Hand delivered submissions in docketed proceedings should be delivered to Health and Human Services, 12225 Wilkins Avenue, Rockville, Maryland 20852.

In addition to publishing the full text of this document in the **Federal Register**, the Commission provides all interested persons an opportunity to view and/or print the contents of this document via the internet through the Commission's Home Page (*http://ferc.gov*) using the eLibrary link. Enter the docket number excluding the last three digits in the docket number field to access the document. At this time, the Commission has suspended access to the Commission's Public Reference Room, due to the proclamation declaring a National Emergency concerning the Novel Coronavirus Disease (COVID–19), issued by the President on March 13, 2020. For assistance, contact FERC at *FERCOnlineSupport@ferc.gov,* or call toll-free, (886) 208–3676 or TYY, (202) 502–8659.

Comment Date: 5:00 p.m. Eastern time on July 1, 2020.

Dated: June 2, 2020.

Nathaniel J. Davis, Sr.,

Deputy Secretary.

[FR Doc. 2020–12327 Filed 6–5–20; 8:45 am]

BILLING CODE 6717–01–P

DEPARTMENT OF ENERGY

Federal Energy Regulatory Commission

Combined Notice of Filings

Take notice that the Commission has received the following Natural Gas Pipeline Rate and Refund Report filings:

Docket Numbers: RP19–1090–004.
Applicants: BBT AlaTenn, LLC.
Description: Compliance filing BBT AlaTenn NAESB Compliance Filing to be effective 6/1/2020.
Filed Date: 6/1/20.
Accession Number: 20200601–5121.
Comments Due: 5 p.m. ET 6/15/20.

Docket Numbers: RP19–1091–006.
Applicants: BBT Midla, LLC.
Description: Compliance filing BBT Midla NAESB Compliance Filing to be effective 6/1/2020.
Filed Date: 6/1/20.
Accession Number: 20200601–5122.
Comments Due: 5 p.m. ET 6/15/20.

Docket Numbers: RP19–1092–003.
Applicants: Destin Pipeline Company, L.L.C.
Description: Compliance filing Destin Pipeline Company NAESB Compliance Filing to be effective 6/1/2020.
Filed Date: 6/1/20.
Accession Number: 20200601–5119.
Comments Due: 5 p.m. ET 6/15/20.

Docket Numbers: RP19–1093–003.
Applicants: High Point Gas Transmission, LLC.
Description: Compliance filing High Point Gas Transmission NAESB Compliance Filing to be effective 6/1/2020.
Filed Date: 6/1/20.
Accession Number: 20200601–5120.
Comments Due: 5 p.m. ET 6/15/20.

Docket Numbers: RP19–1094–003.
Applicants: BBT Trans-Union Interstate Pipeline, L.P.
Description: Compliance filing BBT Trans Union NAESB Compliance Filing to be effective 6/1/2020.
Filed Date: 6/1/20.
Accession Number: 20200601–5123.
Comments Due: 5 p.m. ET 6/15/20.

Docket Numbers: RP20–926–000.
Applicants: Equitrans, L.P.
Description: § 4(d) Rate Filing: Negotiated Rate Capacity Release Agreements—6/1/2020 to be effective 6/1/2020.
Filed Date: 6/1/20.
Accession Number: 20200601–5065.
Comments Due: 5 p.m. ET 6/15/20.

Docket Numbers: RP20–927–000.
Applicants: Equitrans, L.P.
Description: § 4(d) Rate Filing: Negotiated Rate Agreement—Hill Top to be effective 6/1/2020.
Filed Date: 6/1/20.
Accession Number: 20200601–5080.
Comments Due: 5 p.m. ET 6/15/20.

Docket Numbers: RP20–928–000.
Applicants: Enable Gas Transmission, LLC.
Description: § 4(d) Rate Filing: Negotiated Rate Filing—June 1 2020 Weyerhaeuser 1007729 to be effective 6/1/2020.
Filed Date: 6/1/20.
Accession Number: 20200601–5096.
Comments Due: 5 p.m. ET 6/15/20.

Docket Numbers: RP20–929–000.
Applicants: Transcontinental Gas Pipe Line Company, LLC.
Description: § 4(d) Rate Filing: Negotiated Rates—Cherokee AGL—Replacement Shippers—Jun 2020 to be effective 6/1/2020.
Filed Date: 6/1/20.
Accession Number: 20200601–5099.
Comments Due: 5 p.m. ET 6/15/20.

Docket Numbers: RP20–930–000.
Applicants: Cheniere Corpus Christi Pipeline, LP.
Description: § 4(d) Rate Filing: TRA—June 2020—RP20–627 to be effective 7/1/2020.
Filed Date: 6/1/20.
Accession Number: 20200601–5115.
Comments Due: 5 p.m. ET 6/15/20.

Docket Numbers: RP20–931–000.
Applicants: Gulf South Pipeline Company, LLC.
Description: § 4(d) Rate Filing: Cap Rel Neg Rate Agmt (Constellation 52812 to Exelon 52853) to be effective 6/1/2020.
Filed Date: 6/1/20.
Accession Number: 20200601–5145.
Comments Due: 5 p.m. ET 6/15/20.

Docket Numbers: RP20–932–000.
Applicants: Gulf South Pipeline Company, LLC.
Description: § 4(d) Rate Filing: Cap Rel Neg Rate Agmt (Southern 49811 to Texla 52856) to be effective 6/2/2020.
Filed Date: 6/1/20.
Accession Number: 20200601–5146.
Comments Due: 5 p.m. ET 6/15/20.

Docket Numbers: RP20–933–000.
Applicants: Empire Pipeline, Inc.
Description: § 4(d) Rate Filing: Empire North Jackson CS Early In-Service to be effective 7/1/2020.

Filed Date: 6/1/20.
Accession Number: 20200601–5153.
Comments Due: 5 p.m. ET 6/15/20.

Docket Numbers: RP20–934–000.
Applicants: Northern Border Pipeline Company.
Description: § 4(d) Rate Filing: Negotiated Rate Filing—ONEOK to be effective 6/1/2020.
Filed Date: 6/1/20.
Accession Number: 20200601–5154.
Comments Due: 5 p.m. ET 6/15/20.

Docket Numbers: RP20–935–000.
Applicants: Questar Southern Trails Pipeline Company.
Description: Annual Fuel Gas Reimbursement Report of Questar Southern Trails Pipeline Company under RP20–935.
Filed Date: 6/1/20.
Accession Number: 20200601–5156.
Comments Due: 5 p.m. ET 6/15/20.

Docket Numbers: RP20–936–000.
Applicants: Enable Gas Transmission, LLC.
Description: Tariff Cancellation: Filing to Remove Rate Schedules RSS and SBS to be effective 7/1/2020.
Filed Date: 6/1/20.
Accession Number: 20200601–5170.
Comments Due: 5 p.m. ET 6/15/20.

Docket Numbers: RP20–937–000.
Applicants: Stagecoach Pipeline & Storage Company LLC.
Description: § 4(d) Rate Filing: Stagecoach Pipeline & Storage Company LLC—Filing of Tariff Changes to be effective 7/2/2020.
Filed Date: 6/1/20.
Accession Number: 20200601–5175.
Comments Due: 5 p.m. ET 6/15/20.

Docket Numbers: RP20–938–000.
Applicants: High Point Gas Transmission, LLC.
Description: Annual Unaccounted for Gas Retention Filing of High Point Gas Transmission, LLC under RP20–938.
Filed Date: 6/1/20.
Accession Number: 20200601–5351.
Comments Due: 5 p.m. ET 6/15/20.

The filings are accessible in the Commission's eLibrary system by clicking on the links or querying the docket number.

Any person desiring to intervene or protest in any of the above proceedings must file in accordance with Rules 211 and 214 of the Commission's Regulations (18 CFR 385.211 and 385.214) on or before 5:00 p.m. Eastern time on the specified date(s). Protests may be considered, but intervention is necessary to become a party to the proceeding.

eFiling is encouraged. More detailed information relating to filing requirements, interventions, protests, service, and qualifying facilities filings can be found at: *http://www.ferc.gov/docs-filing/efiling/filing-req.pdf.* For other information, call (866) 208–3676 (toll free). For TTY, call (202) 502–8659.

Dated: June 2, 2020.

Nathaniel J. Davis, Sr.,

Deputy Secretary.

[FR Doc. 2020–12326 Filed 6–5–20; 8:45 am]

BILLING CODE 6717–01–P

DEPARTMENT OF ENERGY

Federal Energy Regulatory Commission

Combined Notice of Filings #1

Take notice that the Commission received the following electric rate filings:

Docket Numbers: ER10–2042–032; ER10–1862–026; ER10–1877–006; ER10–1893–026; ER10–1934–026; ER10–1938–027; ER10–1942–024; ER10–2985–030; ER10–3049–031; ER10–3051–031; ER11–4369–011; ER16–2218–011; ER17–696–012.
Applicants: Calpine Energy Services, L.P., Calpine Construction Finance Company, LP, Calpine Energy Solutions, LLC, Calpine PowerAmerica—CA, LLC, CES Marketing IX, LLC, CES Marketing X, LLC, Champion Energy, LLC, Champion Energy Marketing LLC, Champion Energy Services, LLC, Hermiston Power, LLC, North American Power and Gas, LLC, North American Power Business, LLC, Power Contract Financing, L.L.C.
Description: Supplement to December 31, 2019 Updated Market Power Analysis of the Calpine Northwest MBR Sellers.
Filed Date: 6/2/20.
Accession Number: 20200602–5069.
Comments Due: 5 p.m. ET 6/23/20.

Docket Numbers: ER14–1818–020.
Applicants: Boston Energy Trading and Marketing LLC.
Description: Updated Market Power Analysis for the Northeast Region of Boston Energy Trading and Marketing LLC.
Filed Date: 6/1/20.
Accession Number: 20200601–5374.
Comments Due: 5 p.m. ET 7/31/20.

Docket Numbers: ER14–2798–015; ER18–494–004.
Applicants: Beech Ridge Energy II LLC, Beech Ridge Energy II Holdings LLC.
Description: Notification of Non-Material Change in Status of the BR Sellers.
Filed Date: 6/1/20.
Accession Number: 20200601–5366.
Comments Due: 5 p.m. ET 6/22/20.

Docket Numbers: ER15–1387–008.
Applicants: Appalachian Power Company, PJM Interconnection, L.L.C.
Description: Compliance filing: PJM TOs submit compliance filing per Commissions 4/3/2020 order in ER15–1387 to be effective 7/18/2016.
Filed Date: 6/2/20.
Accession Number: 20200602–5049.
Comments Due: 5 p.m. ET 6/23/20.

Docket Numbers: ER18–1314–006.
Applicants: PJM Interconnection, L.L.C.
Description: Compliance filing: Second Compliance in EL16–49 and EL18–178, Application of MOPR to be effective 12/31/9998.
Filed Date: 6/1/20.
Accession Number: 20200601–5193.
Comments Due: 5 p.m. ET 6/22/20.

Docket Numbers: ER19–1888–001.
Applicants: Southwest Power Pool, Inc.
Description: Compliance filing: Southwestern Public Service Company Formula Rate Compliance Filing to be effective 2/1/2019.
Filed Date: 5/29/20.
Accession Number: 20200529–5370.
Comments Due: 5 p.m. ET 6/19/20.

Docket Numbers: ER20–1642–000.
Applicants: Mariposa Energy, LLC.
Description: Supplement to April 23, 2020 Request for Waiver of Mariposa Energy, LLC.
Filed Date: 6/1/20.
Accession Number: 20200601–5371.
Comments Due: 5 p.m. ET 6/8/20.

Docket Numbers: ER20–1956–000.
Applicants: Liberty Utilities (Granite State Electric) Corp.
Description: § 205(d) Rate Filing: Borderline Sales Rate Sheet Update 2020 to be effective 5/1/2020.
Filed Date: 6/1/20.
Accession Number: 20200601–5198.
Comments Due: 5 p.m. ET 6/22/20.

Docket Numbers: ER20–1957–000.
Applicants: Gulf Power Company.
Description: Compliance filing: Order No. 864 Compliance Filing to be effective 1/27/2020.
Filed Date: 6/1/20.
Accession Number: 20200601–5201.
Comments Due: 5 p.m. ET 6/22/20.

Docket Numbers: ER20–1958–000.
Applicants: Puget Sound Energy, Inc.
Description: Compliance filing: Order 864 Compliance Filing to be effective 1/27/2020.
Filed Date: 6/1/20.
Accession Number: 20200601–5208.
Comments Due: 5 p.m. ET 6/22/20.

Docket Numbers: ER20–1960–000.
Applicants: Tampa Electric Company.
Description: § 205(d) Rate Filing: Section 205 Transmission Energy

Storage Depreciation Filing—2020 to be effective 5/15/2020.

Filed Date: 6/2/20.

Accession Number: 20200602–5027.

Comments Due: 5 p.m. ET 6/23/20.

Docket Numbers: ER20–1961–000.

Applicants: Southwest Power Pool, Inc.

Description: Compliance filing: NorthWestern Formula Rate Revisions to Incorporate Changes filed in ER20–1090 to be effective 1/27/2020.

Filed Date: 6/2/20.

Accession Number: 20200602–5028.

Comments Due: 5 p.m. ET 6/23/20.

Docket Numbers: ER20–1963–000.

Applicants: Nevada Power Company.

Description: § 205(d) Rate Filing: Service Agreement 19–00061 to be effective 8/2/2020.

Filed Date: 6/2/20.

Accession Number: 20200602–5034.

Comments Due: 5 p.m. ET 6/23/20.

Docket Numbers: ER20–1964–000.

Applicants: Midcontinent Independent System Operator, Inc., MidAmerican Energy Company.

Description: § 205(d) Rate Filing: 2020–06–02_MidAmerican Energy Company filing Att O to be effective 8/1/2020.

Filed Date: 6/2/20.

Accession Number: 20200602–5039.

Comments Due: 5 p.m. ET 6/23/20.

Docket Numbers: ER20–1965–000.

Applicants: Versant Power.

Description: § 205(d) Rate Filing: MBR Notice of Succession to Versant Power to be effective 5/11/2020.

Filed Date: 6/2/20.

Accession Number: 20200602–5062.

Comments Due: 5 p.m. ET 6/23/20.

Docket Numbers: ER20–1967–000.

Applicants: ISO New England Inc., New England Power Pool Participants Committee.

Description: § 205(d) Rate Filing: ISO–NE & NEPOOL; Energy Efficiency Treatment During Capacity Scarcity Conditions to be effective 8/1/2020.

Filed Date: 6/2/20.

Accession Number: 20200602–5067.

Comments Due: 5 p.m. ET 6/23/20.

Docket Numbers: ER20–1968–000.

Applicants: Alkali Solar LLC.

Description: Baseline eTariff Filing: Baseline new SFA Tap Line to be effective 6/3/2020.

Filed Date: 6/2/20.

Accession Number: 20200602–5080.

Comments Due: 5 p.m. ET 6/23/20.

Docket Numbers: ER20–1969–000.

Applicants: Alkali Solar LLC.

Description: § 205(d) Rate Filing: Normal SFA to be effective 6/3/2020.

Filed Date: 6/2/20.

Accession Number: 20200602–5083.

Comments Due: 5 p.m. ET 6/23/20.

Docket Numbers: ER20–1970–000.

Applicants: Diamond Spring, LLC.

Description: Baseline eTariff Filing: Diamond Spring MBR Application to be effective 8/1/2020.

Filed Date: 6/2/20.

Accession Number: 20200602–5084.

Comments Due: 5 p.m. ET 6/23/20.

The filings are accessible in the Commission's eLibrary system by clicking on the links or querying the docket number.

Any person desiring to intervene or protest in any of the above proceedings must file in accordance with Rules 211 and 214 of the Commission's Regulations (18 CFR 385.211 and 385.214) on or before 5:00 p.m. Eastern time on the specified comment date. Protests may be considered, but intervention is necessary to become a party to the proceeding.

eFiling is encouraged. More detailed information relating to filing requirements, interventions, protests, service, and qualifying facilities filings can be found at: *http://www.ferc.gov/docs-filing/efiling/filing-req.pdf.* For other information, call (866) 208–3676 (toll free). For TTY, call (202) 502–8659.

Dated: June 2, 2020.

Nathaniel J. Davis, Sr.,

Deputy Secretary.

[FR Doc. 2020–12325 Filed 6–5–20; 8:45 am]

BILLING CODE 6717–01–P

FEDERAL COMMUNICATIONS COMMISSION

[DA 20–576]

Media Bureau Announces Settlement Opportunity for Mutually Exclusive Low Power Television and TV Translator Applications—June 1, 2020–July 31, 2020

AGENCY: Federal Communications Commission.

ACTION: Notice.

SUMMARY: The Media Bureau has pending before it the mutually exclusive applications for new or modified digital low power television and television translator stations (LPTV/translator stations) listed in the Appendix to this Public Notice. Parties with applications in the mutually exclusive groups listed in the Appendix may resolve their mutual exclusivity by unilateral engineering amendment, legal settlement, or engineering settlement during a settlement period beginning today, June 1, 2020 and ending at 11:59 p.m. ET, July 31, 2020.

DATES: The settlement period will open June 1, 2020 and close on July 31, 2020 at 11:59 p.m. ET.

FOR FURTHER INFORMATION CONTACT: Mark Colombo (technical questions), *Mark.Colombo@fcc.gov,* (202) 418–7611, or Shaun Maher (legal questions), *Shaun.Maher@fcc.gov,* (202) 418–2324, of the Video Division, Media Bureau.

SUPPLEMENTARY INFORMATION: The applications listed in the Appendix to the Public Notice are subject to the Commission's competitive bidding procedures unless their mutual exclusivity is resolved. The Media Bureau will withhold further action on the mutually exclusive applications listed in the Appendix pending submission of settlement agreements or engineering amendments to resolve mutual exclusivity prior to the close of the settlement period.

Unilateral Engineering Amendments. Applicants may resolve their mutual exclusivity by filing an engineering amendment to their application. An amendment that does not implicate the application of another station may be filed by the station during the settlement period without coordination with any other entity. All such amendments must be submitted by filing an amended FCC Form 2100—Schedule C in the Media Bureau's Licensing and Management System (LMS) by 11:59 p.m. ET on July 31, 2020. Engineering amendments submitted by applicants to unilaterally resolve their mutual exclusivity must be minor, as defined by the applicable rules, and must not create new mutual exclusivities or application conflicts.

Legal Settlements. Applicants may also resolve their mutual exclusivity through a legal settlement that provides for the dismissal of one or more of the application(s) in their mutually exclusive group. Such agreements must be submitted for Commission approval. Parties submitting a legal settlement for approval must ensure that their agreements comply with the provisions of section 311(c) of the Communications Act of 1934, as amended, and the pertinent requirements of section 73.3525 of the Commission's rules, including, inter alia, the settlement reimbursement restrictions. Parties filing a request for approval of settlement agreement must include a copy of their agreement and: (1) A statement outlining the reasons why such agreement is in the public interest; (2) a statement that each party's application was not filed for the purpose of reaching or carrying out such agreement; (3) a certification that neither the dismissing applicant nor its

principals has received any money or other consideration in excess of the legitimate and prudent expenses of the applicant; (4) a statement outlining the exact nature and amount of any consideration paid or promised; (5) an itemized accounting of the expenses for which it seeks reimbursement; and (6) the terms of any oral agreement relating to the dismissal or withdrawal of its application. Requests for approval of settlement agreement and the above-outlined documents required by section 73.3525 must be submitted in the form of an amendment to each party's pending application in LMS by 11:59 p.m. ET on July 31, 2020.

Engineering Settlements. Applicants may also enter into a settlement agreement to resolve their mutual exclusivity by means of an engineering solution. As with unilateral engineering amendments, engineering settlements must be minor, as defined by the applicable rules, and must not create new mutual exclusivities or application conflicts. Such settlements may include proposing channel sharing as means to resolve their mutual exclusivity. Engineering settlement agreements must also be filed with the Commission for approval and must include the documentation required by section 73.3525. Requests for approval of engineering settlement agreements, accompanying documentation, and corresponding technical amendments must be submitted in the form of an amendment to each party's pending application in LMS by 11:59 p.m. ET on July 31, 2020. In the case of channel sharing settlements, the proposed sharee station shall file to modify its current license, specifying the technical parameters in the proposed host station's application and request that its application be dismissed upon grant of the channel sharing.

Applicants entering into engineering settlements should endeavor, wherever possible, to resolve their mutual exclusivity through minor engineering amendments, as defined by the applicable rules. However, applicants that are unable to resolve their mutual exclusivity through a minor engineering amendment may, as part of their engineering settlement, amend their application(s) to propose a new available channel. The new channel proposal may not create a new mutual exclusivity or conflict with any other previously-filed application.

Federal Communications Commission.

Thomas Horan,

Media Bureau.

[FR Doc. 2020–12282 Filed 6–5–20; 8:45 am]

BILLING CODE 6712–01–P

FEDERAL COMMUNICATIONS COMMISSION

[GN Docket No. 18–122, DA 20–586; FRS 16829]

Wireless Telecommunications Bureau Seeks Comment on Optional Lump Sum Payments for 3.7–4.2 GHz Band Incumbent Earth Station Relocation Expenses

AGENCY: Federal Communications Commission.

ACTION: Notice.

SUMMARY: In this document, the Wireless Telecommunications Bureau (Bureau) seeks comment on the preliminary lump sum categories and payment amounts available to Fixed Satellite Service incumbent earth station operators as part of the 3.7–4.2 GHz band transition.

DATES: Comments are due June 16, 2020.

ADDRESSES: You may submit comments and reply comments, identified by GN Docket No. 18–122, by any of the following methods:

- *Electronic Filers:* Elections may be filed electronically using the internet by accessing the ECFS: *http://apps.fcc.gov/ecfs/* in docket number GN 18–122.
- *Paper Filers:* Parties who choose to file by paper must file an original and one copy of each filing.
- Filings can be sent by commercial overnight courier, or by first-class or overnight U.S. Postal Service mail. All filings must be addressed to the Commission's Secretary, Office of the Secretary, Federal Communications Commission.
- Commercial overnight mail (other than U.S. Postal Service Express Mail and Priority Mail) must be sent to 9050 Junction Drive, Annapolis Junction, MD 20701.U.S.
- Postal Service first-class, Express, and Priority mail must be addressed to 445 12th Street SW, Washington DC 20554.
- Effective March 19, 2020, and until further notice, the Commission no longer accepts any hand or messenger delivered filings. This is a temporary measure taken to help protect the health and safety of individuals, and to mitigate the transmission of COVID–19. *See FCC Announces Closure of FCC Headquarters Open Window and Change in Hand-Delivery Policy,* Public Notice, DA 20–304 (March 19, 2020). *https://www.fcc.gov/document/fcc-closes-headquarters-open-window-and-changes-hand-delivery-policy.*
- During the time the Commission's building is closed to the general public and until further notice, if more than one docket or rulemaking number appears in the caption of a proceeding, paper filers need not submit two additional copies for each additional docket or rulemaking number; an original and one copy are sufficient.

FOR FURTHER INFORMATION CONTACT: Susan Mort, Wireless Telecommunications Bureau, at *Susan.Mort@fcc.gov* or 202–418–2429.

SUPPLEMENTARY INFORMATION: This is a summary of the Public Notice, *Wireless Telecommunications Bureau Seeks Comment on Optional Lump Sum Payments for 3.7–4.2 GHz Band Incumbent Earth Station Relocation Expenses,* GN Docket No. 18–122, DA 20–586 (*Public Notice*), released on June 4, 2020. The complete text of the *Public Notice* is available on the Commission's website at *https://docs.fcc.gov/public/attachments/DA-20-586A1.pdf* or by using the search function for GN Docket No. 18–122 on the Commission's ECFS web page at *www.fcc.gov/ecfs.*

Pursuant to sections 1.415 and 1.419 of the Commission's rules, 47 CFR 1.415, 1.419, interested parties may file elections on or before the date indicated on the first page of this document.

People with Disabilities: To request materials in accessible formats for people with disabilities (braille, large print, electronic files, audio format), send an email to *fcc504@fcc.gov* or call the Consumer & Governmental Affairs Bureau at 202–418–0530 (voice), 202–418–0432 (tty).

Ex Parte Rules: This proceeding shall be treated as a ''permit-but-disclose'' proceeding in accordance with the Commission's *ex parte* rules. Persons making *ex parte* presentations must file a copy of any written presentation or a memorandum summarizing any oral presentation within two business days after the presentation (unless a different deadline applicable to the Sunshine period applies). Persons making oral *ex parte* presentations are reminded that memoranda summarizing the presentation must: (1) List all persons attending or otherwise participating in the meeting at which the *ex parte* presentation was made; and (2) summarize all data presented and arguments made during the presentation. If the presentation consisted in whole or in part of the presentation of data or arguments already reflected in the presenters written comments, memoranda, or other filings in the proceeding, the presenter may provide citations to such data or arguments in his or her prior comments, memoranda, or other filings (specifying the relevant page and/or paragraph numbers where such data or arguments

can be found) in lieu of summarizing them in the memorandum. Documents shown or given to Commission staff during *ex parte* meetings are deemed to be written *ex parte* presentations and must be filed consistent with section 1.1206(b) of the Commission's rules. In proceedings governed by section 1.49(f) of the rules or for which the Commission has made available a method of electronic filing, written *ex parte* presentations and memoranda summarizing oral *ex parte* presentations, and all attachments thereto, must be filed through the electronic comment filing system available for that proceeding, and must be filed in their native format (*e.g.,* .doc, .xml., .ppt, searchable .pdf). Participants in this proceeding should familiarize themselves with the Commission's *ex parte* rules.

Synopsis: With this *Public Notice,* the Wireless Telecommunications Bureau (the Bureau) invites interested parties to provide additional comment on the preliminary lump sum categories and payment amounts available to Fixed Satellite Service (FSS) incumbent earth station operators as part of the 3.7–4.2 GHz band (C-band) transition.

In the *3.7 GHz Band Report and Order,* the Commission adopted rules to make 280 megahertz of mid-band spectrum available for flexible use, plus a 20 megahertz guard band, throughout the contiguous United States by transitioning existing services out of the lower portion and into the upper 200 megahertz of the C-band. The *3.7 GHz Report and Order* established that new 3.7 GHz Service licensees will reimburse the reasonable relocation costs of eligible incumbents, including incumbent FSS earth station operators, to transition to the upper 200 megahertz of the band. The *3.7 GHz Report and Order* established that incumbent FSS earth station operators may either accept: (1) Reimbursement for their actual reasonable relocation costs by maintaining satellite reception; or (2) a lump sum reimbursement ''based on the average, estimated costs of relocating all of their incumbent earth stations'' to the upper 200 megahertz of the C-band. The *3.7 GHz Report and Order* directed the Bureau to establish a cost category schedule of the types of expenses that incumbents may incur.

The Commission engaged a third-party contractor, RKF Engineering Solutions, LLC (RKF), to assist in identifying costs that incumbents might incur and to assist with the development of a cost category schedule. With assistance from RKF, the Bureau developed the 3.7 GHz Transition Preliminary Cost Category Schedule of Potential Expenses and Estimated Costs (Preliminary Cost Catalog), which proposed classes of earth stations eligible for lump sum payments but did not specify the amounts. The Bureau sought comment on the earth station classes and specific costs and prices that should ultimately be included in the lump sums. In response, commenters proposed additional classes of earth stations, including a separate category for multichannel video programming distributor (MVPD) earth stations. Some commenters offered methodologies for calculating the lump sum amounts and proposed lump sum amounts. Commenters also identified additional transition costs to be included in the calculation, such as modulation and encoding technology.

After considering the comments received in response to the *Cost Catalog Public Notice,* the Bureau, with assistance from RKF, has updated the classes of earth stations and developed proposed lump sum amounts for each class of earth station. The Bureau seeks additional comment on the proposed earth station classes and proposed lump sum amounts. The Bureau also seeks comment on the methodology for determining average estimated costs. Do the modified categories accurately reflect the relevant classes of earth stations? Do the lump sum amounts reflect the average estimated costs of relocation for each class of earth station, as required by the *3.7 GHz Report and Order*?

Updated Classes of Earth Stations. The Bureau proposes a modified list of earth station classes to more accurately reflect the types of earth stations currently operating in the contiguous United States and to account for the additional costs that MVPD earth station operators may incur during the transition. To determine the relevant lump sum amount, the threshold question is whether an earth station is used for MVPD or non-MVPD operations. Non-MVPD earth station operators would be eligible to receive the base amounts for the relevant class of earth station(s) they operate (*e.g.,* receive only single-feed; receive only multi-feed, small multi-beam, etc.). MVPD earth station operators would be eligible to receive the relevant base amount, as well as the amount associated with any relevant technology upgrades (*e.g.,* Integrated Receiver/Decoder (IRD) replacements) that would be required to transition each eligible MVPD earth station.

Methodology To Calculate Lump Sum Amounts. The Bureau calculated the base lump sum amounts using the relevant earth station cost components from the Preliminary Cost Catalog, with adjustments based on feedback from commenters. For each cost item from the Preliminary Cost Catalog, the Bureau determined the likely number of instances various cost items would be used in an average transition for that earth station class, *i.e.,* how many modifications or component replacements were needed for a given type of earth station in a typical transition. The cost of the modification or replacement used for the lump sum calculation was the average cost of the range from the Preliminary Cost Catalog. Depending on the type of earth station, the Bureau input different modifications or component changes based on the typical range of changes that would be necessary for this type of earth station transition. Some cost elements like soft costs, travel, and filtering apply to all types of earth stations, whereas monthly rental earth stations, fiber transmitters, and other cost elements only apply to more complex earth station transitions.

The Bureau seeks comment on the methodology for calculating the lump sum base amounts. Do the assumptions we make accurately represent the average transition for each class of earth station? For costs that will not be necessary in all transitions, in what percentage of typical transitions for each earth station class would those cost items be necessary? For example, if it is estimated that a rental antenna is needed for 33% of the transitions, the lump sum calculation includes 33% of the cost of such an item. We seek comment on this approach and invite commenters to provide specific data or information on the percentages of typical transitions that would require various expenses.

The Bureau lists two types of technology upgrades for MVPDs (MVPD downlink receiver replacement and program source uplink transmitter replacement and associated changes to shift to higher order modulation techniques) as separate line items and do not include them in the earth station base lump sum amounts. As indicated, these specific technology upgrade lump sum payments can be claimed by MVPD operators only for those MVPD earth stations where upgrades are necessary for the continued provision of existing services after the transition. Similar to the calculation method for earth station lump sum base amounts, the Bureau calculates the technology upgrade lump sum amounts from the average cost of relevant cost elements using a typical number of channels that will need to be upgraded, the amount of equipment to be replaced, and other expenses

necessary to achieve the technology upgrade. The Bureau seeks comment on whether the method of calculating the lump sum payment for technology upgrades adequately addresses the needs of the stakeholders that may need to replace equipment to operate higher order modulation technologies to meet service demands in the remaining 200 megahertz of the C-band. Should there be additional technology upgrade lump sum options based on a more specific demonstration of the level of equipment replacement that is needed? What type of demonstration should we require from MVPD earth station operators to receive technology upgrade lump sum payments? Are there other methods to address the technology upgrade needs for those interested in lump sum payments? How many received channels will need technology upgrades in a typical transition? What percentage of MVPD earth station sites will need technology upgrades? What percentage of various cost factors need to be deployed in the typical transition?

Lump Sum Amounts. The Bureau seeks comment on the base lump sum amounts for each class of earth station as well as the technology upgrade lump sum amounts.

Estimated lump sum payments per earth station	Average estimated cost ($)
Base Lump Sum Payments	
Receive-Only Earth Station (ES) Single-feed	5,217
Receive-Only ES Multi-feed	22,233
Receive-Only Small Multi-beam (2–4 beams) ES	43,159
Receive-Only Large Multi-beam (5+ beams) ES	53,381
Gateway ES (bi-directional)	20,726
Temporary Fixed ES (mobile Electronic News Gathering trucks)	3,060
Technology Upgrade Lump Sum Payments for Qualifying MVPD Earth Stations	
MVPD Downlink Technology Upgrades (per earth station)	70,782
Program Source Uplink Technology Upgrades	156,932

After this additional comment period, and consistent with the *3.7 GHz Report and Order,* the Bureau will consider the record compiled on these issues and publish the final lump sum amounts and provide instructions for making such an election.

Amy Brett,

Chief of Staff, Competition and Infrastructure Policy Division, Wireless Telecommunications Bureau.

[FR Doc. 2020–12493 Filed 6–5–20; 8:45 am]

BILLING CODE 6712–01–P

FEDERAL COMMUNICATIONS COMMISSION

[FRS 16819]

Radio Broadcasting Services; AM or FM Proposals To Change the Community of License

AGENCY: Federal Communications Commission.

ACTION: Notice.

DATES: The agency must receive comments on or before August 7, 2020.

ADDRESSES: Federal Communications Commission, 445 12th Street SW, Washington, DC 20554.

FOR FURTHER INFORMATION CONTACT: Rolanda F. Smith, 202–418–2054.

SUPPLEMENTARY INFORMATION: The following applicants filed AM or FM proposals to change the community of license: COCHISE MEDIA LICENSES LLC, KDVK(FM), Fac. ID No. 190470, From: DOVE CREEK, CO, To: NAVAJO MOUNTAIN, UT, File No. 0000106665; ROX RADIO GROUP, LLC, KREB(AM), Fac. ID No. 30935, From: BENTONVILLE-BELLA, AR, To: GENTRY, AR, File No. BP–20200330AAI; ROX RADIO GROUP, LLC, KFFK(AM), Fac. ID No. 31882, From: ROGERS, AR, To: DECATUR, AR, File No. BP–20200330AAH; RADIOACTIVE, LLC, WPLA(FM), Fac. ID No. 164251, From: DANNEMORA, NY, To: PLATTSBURGH WEST, NY, File No. 0000112361; RADIOACTIVE, LLC, WIRY-FM, Fac. ID No.166029, From: PLATTSBURGH WEST, NY, To: RAY BROOK, NY, File No. 0000112362; NORTH COUNTRY RADIO, INC., WSLP(FM), Fac. ID No. 165944, From: SARANAC LAKE, NY, To: WARRENSBURG, NY, File No. 0000112363; NELSON MULTIMEDIA, INC, WSPY(AM), Fac. ID No. 69700, From: GENEVA, IL, To: SOMONAUK, IL, File No. BP–20200508AAR; SUTTON RADIOCASTING CORPORATION, WFSC(AM), Fac. ID No. 14554, From: FRANKLIN, NC, To: CLAYTON, GA, File No. BP–20200511AAD; and WRBN Radio Station, WRBN(FM), Fac. ID No. 56201, From: CLAYTON, GA, To: TOCCOA, GA, File No. 0000113473. The full text of these applications are available electronically via the Media Bureau's Consolidated Data Base System, *https://licensing.fcc.gov/prod/cdbs/pubacc/prod/app_sear.htm* or Licensing and Management System (LMS), *https://apps2int.fcc.gov/dataentry/public/tv/publicAppSearch.html.*

Federal Communications Commission.

Nazifa Sawez,

Assistant Chief, Audio Division, Media Bureau.

[FR Doc. 2020–12280 Filed 6–5–20; 8:45 am]

BILLING CODE 6712–01–P

FEDERAL DEPOSIT INSURANCE CORPORATION

Notice to All Interested Parties of Intent To Terminate Receivership

Notice is hereby given that the Federal Deposit Insurance Corporation (FDIC or Receiver) as Receiver for the institution listed below intends to terminate its receivership for said institution.

NOTICE OF INTENT TO TERMINATE RECEIVERSHIP

Fund	Receivership name	City	State	Date of appointment of receiver
10097	First BankAmericano	Elizabeth	NJ	07/31/2009

The liquidation of the assets for the receivership has been completed. To the extent permitted by available funds and in accordance with law, the Receiver will be making a final dividend payment to proven creditors.

Based upon the foregoing, the Receiver has determined that the continued existence of the receivership will serve no useful purpose. Consequently, notice is given that the receivership shall be terminated, to be effective no sooner than thirty days after the date of this notice. If any person wishes to comment concerning the termination of the receivership, such comment must be made in writing, identify the receivership to which the comment pertains, and sent within thirty days of the date of this notice to: Federal Deposit Insurance Corporation, Division of Resolutions and Receiverships, Attention: Receivership Oversight Department 34.6, 1601 Bryan Street, Dallas, TX 75201.

No comments concerning the termination of this receivership will be considered which are not sent within this time frame.

Authority: 12 U.S.C. 1819.

Federal Deposit Insurance Corporation.

Dated at Washington, DC, on June 3, 2020.

Robert E. Feldman,

Executive Secretary.

[FR Doc. 2020–12350 Filed 6–5–20; 8:45 am]

BILLING CODE 6714–01–P

FEDERAL DEPOSIT INSURANCE CORPORATION

Notice to All Interested Parties of Intent To Terminate Receiverships

Notice is Hereby Given that the Federal Deposit Insurance Corporation (FDIC or Receiver), as Receiver for the institutions listed below, intends to terminate its receivership for said institutions.

NOTICE OF INTENT TO TERMINATE RECEIVERSHIPS

Fund	Receivership name	City	State	Date of appointment of receiver
10408	Old Harbor Bank	Clearwater	FL	10/21/2011
10493	The Bank of Union	El Reno	OK	01/24/2014

The liquidation of the assets for each receivership has been completed. To the extent permitted by available funds and in accordance with law, the Receiver will be making a final dividend payment to proven creditors.

Based upon the foregoing, the Receiver has determined that the continued existence of the receiverships will serve no useful purpose. Consequently, notice is given that the receiverships shall be terminated, to be effective no sooner than thirty days after the date of this notice. If any person wishes to comment concerning the termination of any of the receiverships, such comment must be made in writing, identify the receivership to which the comment pertains, and be sent within thirty days of the date of this notice to: Federal Deposit Insurance Corporation, Division of Resolutions and Receiverships, Attention: Receivership Oversight Department 34.6, 1601 Bryan Street, Dallas, TX 75201.

No comments concerning the termination of the above-mentioned receiverships will be considered which are not sent within this time frame.

(Authority: 12 U.S.C. 1819)

Federal Deposit Insurance Corporation.

Dated at Washington, DC, on June 2, 2020.

Robert E. Feldman,

Executive Secretary.

[FR Doc. 2020–12279 Filed 6–5–20; 8:45 am]

BILLING CODE 6714–01–P

FEDERAL MINE SAFETY AND HEALTH REVIEW COMMISSION

Temporary Suspension of In-Person Hearings

AGENCY: Federal Mine Safety and Health Review Commission.

ACTION: Notice.

SUMMARY: The Federal Mine Safety and Health Review Commission (the ''Commission'') is suspending all in-person hearings, settlement judge conferences, and mediations until July 10, 2020.

DATES: *Applicable:* June 2, 2020.

FOR FURTHER INFORMATION CONTACT: Sarah Stewart, Deputy General Counsel, Office of the General Counsel, Federal Mine Safety and Health Review Commission, at (202) 434–9935.

SUPPLEMENTARY INFORMATION: In view of the risks presented by the novel coronavirus COVID–19, the Commission's Office of the Chief Administrative Law Judge (''OCALJ'') is, effective June 2, 2020, suspending all in-person hearings, settlement judge conferences, and mediations until July 10, 2020.

At the discretion of the presiding administrative law judge and in coordination with the parties, hearings may proceed by videoconference or by telephone. Similarly, settlement judge conferences and mediations may be held by videoconference or by telephone. If the parties agree that an evidentiary hearing is not needed, cases may also be presented for a decision on the record.

The parties will be notified if the hearing needs to be rescheduled. OCALJ will reassess the risks presented by in-person hearings prior to July 10, 2020, and issue a subsequent order informing the public as to whether the suspension of in-person hearings will continue.

The presiding administrative law judge may be contacted with questions regarding this notice.

(Authority: 30 U.S.C. 823)

Dated: June 2, 2020.

Sarah L. Stewart,

Deputy General Counsel, Federal Mine Safety and Health Review Commission.

[FR Doc. 2020–12288 Filed 6–5–20; 8:45 am]

BILLING CODE 6735–01–P

FEDERAL MINE SAFETY AND HEALTH REVIEW COMMISSION

Sending Case Issuances through Electronic Mail

AGENCY: Federal Mine Safety and Health Review Commission.

ACTION: Notice.

SUMMARY: On a temporary basis, the Federal Mine Safety and Health Review Commission will be sending its issuances through electronic mail and will not be monitoring incoming physical mail or facsimile transmissions.

DATES: *Applicable:* June 2, 2020.

FOR FURTHER INFORMATION CONTACT: Sarah Stewart, Deputy General Counsel, Office of the General Counsel, Federal Mine Safety and Health Review Commission, at (202) 434–9935; *sstewart@fmshrc.gov.*

SUPPLEMENTARY INFORMATION: Until July 10, 2020, case issuances of the Federal Mine Safety and Health Review Commission (FMSHRC), including inter alia notices, decisions, and orders, will be sent only through electronic mail. This includes notices, decisions, and orders described in 29 CFR 2700.4(b)(1), 2700.24(f)(1), 2700.45(e)(3), 2700.54, and 2700.66(a). Further, FMSHRC will not be monitoring incoming physical mail or facsimile described in 29 CFR 2700.5(c)(2). If possible, all filings should be e-filed as described in 29 CFR 2700.5(c)(1).

Authority: 30 U.S.C. 823.

Dated: June 2, 2020.

Sarah L. Stewart,

Deputy General Counsel, Federal Mine Safety and Health Review Commission.

[FR Doc. 2020–12290 Filed 6–5–20; 8:45 am]

BILLING CODE 6735–01–P

FEDERAL MINE SAFETY AND HEALTH REVIEW COMMISSION

Sunshine Act Notice

TIME AND DATE: 10:00 a.m., Thursday, June 18, 2020.

PLACE: This meeting will be conducted through a videoconference involving all Commissioners. Any person wishing to listen to the proceedings may call the phone number listed below.

STATUS: Open.

MATTERS TO BE CONSIDERED: The Commission will consider and act upon the following in open session: *Secretary of Labor* v. *Scott and Thomas, employed by Mill Branch Coal Corp.,* Docket No. VA 2018–103 (Issues include whether the Judge erred by dismissing civil penalty proceedings involving individuals because he determined that the proposed penalty assessments were filed too late.)

Any person attending this meeting who requires special accessibility features and/or auxiliary aids, such as sign language interpreters, must inform the Commission in advance of those needs. Subject to 29 CFR 2706.150(a)(3) and § 2706.160(d).

CONTACT PERSON FOR MORE INFO: Emogene Johnson (202) 434–9935/(202) 708–9300 for TDD Relay/1–800–877–8339 for toll free.

PHONE NUMBER FOR LISTENING TO MEETING: 1–(866) 236–7472; Passcode: 678–100.

Authority: 5 U.S.C. 552b.

Dated: June 4, 2020.

Sarah L. Stewart,

Deputy General Counsel.

[FR Doc. 2020–12475 Filed 6–4–20; 4:15 pm]

BILLING CODE 6735–01–P

DEPARTMENT OF HEALTH AND HUMAN SERVICES

Agency for Healthcare Research and Quality; Notice of Meeting

AGENCY: Agency for Healthcare Research and Quality (AHRQ), HHS.

ACTION: Notice of meeting.

SUMMARY: The subcommittee listed below is part of AHRQ's Health Services Research Initial Review Group Committee. Grant applications are to be reviewed and discussed at this meeting. This subcommittee meeting will be closed to the public.

DATES: *See below for date of meeting:*

Health Care Research and Training (HCRT)

Date: July 10th, 2020

ADDRESSES: Agency for Healthcare Research and Quality (Video Assisted Review), 5600 Fishers Lane, Rockville, Maryland 20857.

FOR FURTHER INFORMATION CONTACT: (to obtain a roster of members, agenda or minutes of the non-confidential portions of this meeting.) Jenny Griffith, Committee Management Officer, Office of Extramural Research Education and Priority Populations, Agency for Healthcare Research and Quality (AHRQ), 5600 Fishers Lane, Rockville, Maryland 20857, Telephone (301) 427–1557.

SUPPLEMENTARY INFORMATION: In accordance with section 10(a)(2) of the Federal Advisory Committee Act (5 U.S.C. App. 2), AHRQ announces this meeting of the above-listed scientific peer review groups, which are subcommittees of AHRQ's Health Services Research Initial Review Group Committee. This subcommittee meeting will be closed to the public in accordance with the provisions set forth in 5 U.S.C. App. 2 section 10(d), 5 U.S.C. 552b(c)(4), and 5 U.S.C. 552b(c)(6). The grant applications and the discussions could disclose confidential trade secrets or commercial property such as patentable material, and personal information concerning individuals associated with the grant applications, the disclosure of which would constitute a clearly unwarranted invasion of personal privacy.

Agenda items for this meeting are subject to change as priorities dictate.

Virginia L. Mackay-Smith,

Associate Director.

[FR Doc. 2020–12291 Filed 6–5–20; 8:45 am]

BILLING CODE 4160–90–P

DEPARTMENT OF HEALTH AND HUMAN SERVICES

Agency for Healthcare Research and Quality

Agency Information Collection Activities: Proposed Collection; Comment Request

AGENCY: Agency for Healthcare Research and Quality, HHS.

ACTION: Notice.

SUMMARY: This notice announces the intention of the Agency for Healthcare Research and Quality (AHRQ) to request that the Office of Management and Budget (OMB) approve the proposed information collection project ''Identifying and Testing Strategies for Management of Opioid Use and Misuse in Older Adults in Primary Care Practices.''

DATES: Comments on this notice must be received by 60 days after date of publication of this Notice.

ADDRESSES: Written comments should be submitted to: Doris Lefkowitz, Reports Clearance Officer, AHRQ, by email at *doris.lefkowitz@AHRQ.hhs.gov.*

Copies of the proposed collection plans, data collection instruments, and specific details on the estimated burden

can be obtained from the AHRQ Reports Clearance Officer.

FOR FURTHER INFORMATION CONTACT: Doris Lefkowitz, AHRQ Reports Clearance Officer, (301) 427–1477, or by email at *doris.lefkowitz@AHRQ.hhs.gov.*

SUPPLEMENTARY INFORMATION:

Proposed Project

Identifying and Testing Strategies for Management of Opioid Use and Misuse in Older Adults in Primary Care Practices

The goals of this project are to assess and describe the current prevalence, awareness, and management of opioid use, misuse, and abuse in older adults, and identify gaps and areas of needed research. Additionally, this project will support primary care practices (PCP) in developing and testing innovative strategies, approaches, and/or tools for opioid management within the context of facilitated learning collaboratives, culminating in a Compendium of Strategies for opioid management in older adults in primary care settings. Through this project, AHRQ is addressing the gaps in knowledge around opioid use in older adults in primary care settings. To accomplish this we are synthesizing what is known about the development and testing of innovative strategies, approaches, and/or tools for opioid management of older adults with pain on opioid medication, and/or opioid use disorder.

This study is being conducted by AHRQ through its contractor, Abt Associates Inc., pursuant to AHRQ's statutory authority to conduct and support research on healthcare and on systems for the delivery of such care, including activities with respect to the quality, effectiveness, efficiency, appropriateness and value of healthcare services and with respect to quality measurement and improvement. 42 U.S.C. 299a(a)(1) and (2).

Method of Collection

To achieve the goals of this project the following data collections will be implemented:

1. We will conduct a web-based survey of primary care clinicians who care for older adults. The purpose of the survey is to assess primary care clinician experiences caring for older adult patients with chronic pain on opioids. The survey will be sent to 5,000 randomly selected primary care clinicians.

2. Participating learning collaborative practices will be asked to implement strategies related to each of the key areas on the continuum: Prevention, management and treatment of opioid use, misuse and OUD in older adults. We will collect primary data via observations, interviews, and a survey, and secondary data including practice and learning collaborative documents. The following primary data collection activities are proposed:

a. *PCP Clinical Staff Survey.* A brief web-based survey will be emailed to all clinical staff participating in the learning collaborative at baseline before starting implementation and approximately 15 months later. We assumed 20 clinical staff per clinic site, and 24 clinics for a total of 480 staff.

b. *Interviews.* In-depth interviews will occur with up to three staff at each health care organization participating in the learning collaborative, for a total of up to 72 individuals. The evaluation team will conduct these interviews with:

c. Quality Improvement (QI) champion for the initiative in the clinics at baseline, mid-point and post-implementation.

d. Two additional staff (*e.g.* clinician, information technology analyst, behavioral health specialist) per organization (mid-point and post-implementation).

3. *Self-Assessment.* The QI champion will complete a self-assessment tool at baseline. A similar tool is used in the Six Building Blocks program and the Centers for Disease Control (CDC) Opioid QI Collaborative. This tool is for clinics or health systems to assess the status of their QI efforts to improve opioid prescribing, and the extent to which care is consistent with the CDC Opioid Prescribing Guidelines.

4. *Quality Improvement Measures.* Each clinic will report quarterly on the QI measures. The QI measures include both process and outcome measures. Process measures are reflective of recommended clinical strategies or tools being implemented, and outcome measures examine intermediate outcomes. A data analyst at each organization will provide aggregate reports of the specified QI measures to the evaluation team on a quarterly basis over the course of a 15-month period. The QI measures are measures of opioid prescribing that are critical for understanding the potential improvements in opioid prescribing in implementing the strategies.

Estimated Annual Respondent Burden

Exhibit 1 presents estimates of the reporting burden hours for the data collection efforts. Time estimates are based on prior experiences and what can reasonably be requested of participating providers (survey) and PCPs. The number of respondents listed in column A, Exhibit 1 reflects a projected response rate for data collection efforts.

1. *Provider web-based survey.* A survey will be sent to 5,000 randomly selected primary care clinicians. The survey will include no more than 30 items and is expected to take approximately 15 minutes to complete. We anticipate a 30% response rate, resulting in 1,500 completed surveys.

2. *PCP Learning Collaboratives Primary Data Collection.*

a. *PCP Learning Collaborative Clinical Staff Survey.* A brief survey will be emailed to all clinicians at baseline before starting implementation and approximately 15 months later. We assume 20 clinical staff per clinic site, and 24 clinics for a total of 480 staff. We assume 360 clinical staff will complete the survey based on a 75% response rate. It is expected to take up to 20 minutes to complete.

b. *Interviews.* In-depth interviews will occur with up to 3 staff at each health care organization, for a total of up to 72 individuals. The evaluation team will conduct these interviews, each lasting up to 30 minutes with:

i. *QI champion* for the initiative in the clinics at baseline, mid-point and post-implementation.

ii. *Two additional staff* (*e.g.,* clinician, information technology analyst, behavioral health specialist) per PCP at mid-point and post-implementation.

c. *Self-Assessment.* A self-assessment tool used in the Six Building Blocks program, and CDC Opioid QI Collaborative for clinics or health systems will be provided to practices to assess where they are in their QI efforts to improve opioid prescribing, and the extent to which care is consistent with the CDC Opioid Prescribing Guideline. The QI champion or lead for the effort in each of the 24 participating PCPs will respond to the self-assessment which will take approximately 15 minutes to complete.

d. *QI Measures.* Aggregate reports of the specified quality measures will be provided on a quarterly basis over the course of a 15-month period by a data analyst at each PCP. This activity will involve 12 individuals at each learning collaborative for a total of 24. We assume 40 hours total for each data analyst to collect and provide these data: Twenty hours to develop a system for pulling these measures and five hours to pull and submit these reports each quarter. The QI measures are measures of opioid prescribing that are critical for understanding the potential improvements in opioid prescribing in implementing strategies and tools for management of opioid use, misuse, and

abuse. Each health care organization is asked to report quarterly on the QI measures. Clinics may obtain these measures from electronic health record (EHR) data, or they may not have the sophistication or capacity to do that and may track these measures using Excel files or other methods.

EXHIBIT 1—ESTIMATED ANNUALIZED BURDEN HOURS

Data collection method or project activity	Number of respondents A.	Number of responses per respondent B.	Hours per response C.	Total burden hours D.
1. Web-Based Provider Survey [1]	1,500	1	15/60	375
2a. Learning Collaborative Clinical Staff Survey [2]	360	2	20/60	240
2bi. Learning Collaborative QI Champion Interview	24	3	30/60	36
2bii. Learning Collaborative Staff Interview	48	2	30/60	48
2c. Learning Collaborative Self-Assessment	24	1	15/60	6
2di. Learning Collaborative QI Measures—develop system	24	1	20	480
2dii. Learning Collaborative QI Measures—pull and submit	24	4	5	480
Total	2,028	n/a	n/a	1,665

[1] Number of respondents reflects a 30% response rate.
[2] Number of respondents reflects a sample size assuming a 75% response rate.

Exhibit 2, below, presents the estimated annualized cost burden associated with the respondents' time to participate in this research. The total cost burden is estimated to be *$72,145.62.*

EXHIBIT 2—ESTIMATED ANNUALIZED COST BURDEN

Data collection method or project activity	Number of respondents	Total burden hours	Average hourly wage rate *	Total cost burden
1. Web-Based Provider Survey [1]	1,500	375	$101.82	$38,182.50
2a. Learning Collaborative Clinical Staff Survey [2]	360	240	39.42	9,460.80
2bi. Learning Collaborative QI Champion Interview [3]	24	36	54.68	1,968.48
2bii. Learning Collaborative Staff Interview [4]	48	48	39.42	1,892.16
2c. Learning Collaborative Self-Assessment [5]	24	6	54.68	328.08
2di. Learning Collaborative QI Measures—develop system [6]	24	480	21.16	10,156.80
2dii. Learning Collaborative QI Measures—pull and submit [7]	24	480	21.16	10,156.80
Total	2,028	1,917	n/a	72,145.62

[1] The average hourly rate of $101.82 for the provider survey was calculated based on the 2018 mean hourly wage rate for family and general practitioners, (occupation code 29–1062).
[2] The average hourly rate of $39.42 for the learning collaborative clinical staff survey was calculated based on the 2018 mean hourly wage rate for medical and health services managers (occupation code 29–0000).
[3] The average hourly rate of $54.68 for QI champion interviews was calculated based on the 2018 mean hourly wage rate for medical and health services managers (occupation code 11–9111).
[4] The average hourly rate of $39.42 for staff interviews was calculated based on the 2018 mean hourly wage rate for medical and health services managers (occupation code 29–0000).
[5] The average hourly rate of 54.68 for the Learning Collaborative QI champion to complete the self-assessment was calculated based on the 2018 mean hourly wage rate for medical and health services managers (occupation code 11–9111).
[6] The average hourly rate of $21.16 to develop the Learning Collaborative QI measures was calculated based on the 2018 mean hourly wage rate for medical records and health information technicians (occupation code 29–2071).
[7] The average hourly rate of $21.16 to pull and submit the Learning Collaborative QI measures was calculated based on the 2018 mean hourly wage rate for medical records and health information technicians (occupation code 29–2071).

Mean hourly wage rates for these groups of occupations were obtained from the Bureau of Labor & Statistics on ''Occupational Employment and Wages, May 2018'' found at the following URL: *http://www.bls.gov/oes/current/oes_nat.htm#b29-0000.htm.*

Request for Comments

In accordance with the Paperwork Reduction Act, 44 U.S.C. 3501–3520, comments on AHRQ's information collection are requested with regard to any of the following: (a) Whether the proposed collection of information is necessary for the proper performance of AHRQ's health care research and health care information dissemination functions, including whether the information will have practical utility; (b) the accuracy of AHRQ's estimate of burden (including hours and costs) of the proposed collection(s) of information; (c) ways to enhance the quality, utility and clarity of the information to be collected; and (d) ways to minimize the burden of the collection of information upon the respondents, including the use of automated collection techniques or other forms of information technology.

Comments submitted in response to this notice will be summarized and included in the Agency's subsequent request for OMB approval of the proposed information collection. All comments will become a matter of public record.

Dated: June 2, 2020.

Virginia L. Mackay-Smith,

Associate Director.

[FR Doc. 2020–12266 Filed 6–5–20; 8:45 am]

BILLING CODE 4160–90–P

DEPARTMENT OF HEALTH AND HUMAN SERVICES

Centers for Disease Control and Prevention

Board of Scientific Counselors, Center for Preparedness and Response, (BSC, CPR)

AGENCY: Centers for Disease Control and Prevention (CDC), Department of Health and Human Services (HHS).

ACTION: Notice of meeting.

SUMMARY: In accordance with the Federal Advisory Committee Act, the CDC announces the following meeting for the Board of Scientific Counselors, Center for Preparedness and Response, (BSC, CPR). This is a virtual meeting and is open to the public. The public is welcome to view the meeting via Zoom, limited only by the number of seats available, which is 500. Pre-registration is required by accessing the link at *https://cdc.zoomgov.com/webinar/register/WN_sAWlf9f4RO6UKTLI8_Jj9A.*

DATES: The meeting will be held on July 16, 2020, 12:30 p.m. to 4:30 p.m., EDT.

ADDRESSES: Zoom Virtual Meeting. If you wish to attend the virtual meeting, please pre-register by accessing the link at *https://cdc.zoomgov.com/webinar/register/WN_sAWlf9f4RO6UKTLI8_Jj9A.* Instructions to access the Zoom virtual meeting will be provided in the link following registration.

FOR FURTHER INFORMATION CONTACT: Dometa Ouisley, Office of Science and Public Health Practice, Centers for Disease Control and Prevention, 1600 Clifton Road NE, Mailstop-H21–6, Atlanta, Georgia 30333, Telephone: (404) 639–7450; Facsimile: (404) 471–8772; Email: *OPHPR.BSC.Questions@cdc.gov.*

SUPPLEMENTARY INFORMATION:

Purpose: This Board is charged with providing advice and guidance to the Secretary, Department of Health and Human Services (HHS), the Assistant Secretary for Health (ASH), the Director, Centers for Disease Control and Prevention (CDC), and the Director, Center for Preparedness and Response (CPR), concerning strategies and goals for the programs and research within CPR, monitoring the overall strategic direction and focus of the CPR Divisions and Offices, and administration and oversight of peer review for CPR scientific programs. For additional information about the Board, please visit: *http://www.cdc.gov/phpr/science/counselors.htm.*

Matters to be Considered: The agenda will include discussions on CPR Director Updates, Listening Session: BSC Members' Perspectives on COVID–19 Pandemic, Preparedness and Response 2.0: What does it look like and how do we get there, CPR BSC Workgroups Review and Future Directions. Agenda items are subject to change as priorities dictate.

The Director, Strategic Business Initiatives Unit, Office of the Chief Operating Officer, Centers for Disease Control and Prevention, has been delegated the authority to sign **Federal Register** notices pertaining to announcements of meetings and other committee management activities, for both the Centers for Disease Control and Prevention and the Agency for Toxic Substances and Disease Registry.

Kalwant Smagh,

Director, Strategic Business Initiatives Unit, Office of the Chief Operating Officer, Centers for Disease Control and Prevention.

[FR Doc. 2020–12268 Filed 6–5–20; 8:45 am]

BILLING CODE 4163–18–P

DEPARTMENT OF HEALTH AND HUMAN SERVICES

Centers for Disease Control and Prevention

[Docket No. CDC–2020–0066; NIOSH–232]

Board of Scientific Counselors, National Institute for Occupational Safety and Health, National Firefighter Registry Subcommittee Meeting

AGENCY: Centers for Disease Control and Prevention (CDC), Department of Health and Human Services (HHS).

ACTION: Notice of meeting and request for comment.

SUMMARY: In accordance with the Federal Advisory Committee Act, the CDC announces the following meeting of the National Institute for Occupational Safety and Health (BSC, NIOSH) for National Firefighter Registry Subcommittee. This meeting is open to the public via webcast and by teleconference. If you wish to attend by webcast or teleconference, please register at the NIOSH website (*https://www.cdc.gov/niosh/bsc/nfrs/registration.html*) or call (513–841–4203) at least five business days in advance of the meeting.

DATES: The meeting will be held on July 14, 2020, 1:00 p.m. to 5:00 p.m., EDT.

Written comments received by July 7, 2020 will be provided to the Subcommittee prior to the meeting. Docket number CDC–2020–0066; NIOSH–232 will close July 24, 2020 and will be considered by the National Firefighter Registry Program when developing the final protocol.

ADDRESSES: You may submit comments, identified by Docket No. CDC–2020–0066; NIOSH–232 by any of the following methods. CDC does not accept comments by email.

- *Federal eRulemaking Portal: https://www.regulations.gov.* Follow the instructions for submitting comments.
- *Mail:* National Institute for Occupational Safety and Health, NIOSH Docket Office, Docket number CDC–2020–0066; NIOSH–232, 1090 Tusculum Avenue, MS C–34, Cincinnati, Ohio 45226.

Instructions: All submissions received must include the Agency name and Docket number [CDC–2020–0066; NIOSH–232]. Written comments received by July 7, 2020 will be provided to the Subcommittee prior to the meeting. Docket number CDC–2020–0066; NIOSH–232 will close July 24, 2020 and will be considered by the National Firefighter Registry Program when developing the final protocol.

All information received in response to this notice must include the agency name and docket number [CDC–2020–0066; NIOSH–232]. All relevant comments received in conformance with the *https://www.regulations.gov* suitability policy will be posted without change to *https://www.regulations.gov,* including any personal information provided. For access to the docket to read background documents or comments received, go to *https://www.regulations.gov.*

Meeting Information: The web conference access is *https://odniosh.adobeconnect.com/nfrs/* and the teleconference access is (855) 644–0229, and the participant pass code is 9777483.

FOR FURTHER INFORMATION CONTACT: Paul J. Middendorf, Ph.D., Executive Secretary, National Firefighter Registry Subcommittee of the NIOSH Board of Scientific Counselors, NIOSH, CDC, 2400 Century Parkway NE, V24–4, Atlanta, GA 30345, telephone (404) 498–6439, or email at *pmiddendorf@cdc.gov.*

SUPPLEMENTARY INFORMATION: Adobe Connect webcast will be available at *https://odniosh.adobeconnect.com/nfrs/* for participants wanting to connect remotely, and teleconference is available toll-free at (855) 644–0229 with participant pass code 9777483. This meeting is open to the public, limited only by the number of Adobe license seats available, which is 100. The public is welcome to participate during the oral public comment period, 1:30 p.m. to 1:45 p.m. EDT, July 14,

2020. Please note that the oral public comment period ends at the time indicated above.

Comments should be specifically related to the National Firefighter Registry protocol draft report which can be found in docket number CDC–2020–0066; NIOSH–232 or by visiting the subcommittee website: *https://www.cdc.gov/niosh/bsc/nfrs/.* Each commenter will be provided up to five minutes for comment. A limited number of time slots are available and will be assigned on a first come-first served basis. Members of the public who wish to address the NIOSH BSC Subcommittee are requested to contact the Executive Secretary for scheduling purposes (see contact information above). Written comments will also be accepted from those unable to attend the public session per the instructions provided in the address section above. Written comments received in advance of the meeting will be included in the official record of the meeting.

Purpose: The Secretary, the Assistant Secretary for Health, and by delegation the Director, Centers for Disease Control and Prevention, are authorized under Sections 301 and 308 of the Public Health Service Act to conduct directly or by grants or contracts, research, experiments, and demonstrations relating to occupational safety and health and to mine health. The Board of Scientific Counselors Subcommittee for the National Firefighter Registry (the Subcommittee) provides guidance to the Director, National Institute for Occupational Safety and Health on matters related to the National Firefighter Registry. Specifically, the Subcommittee provides guidance and professional input to the Board of Scientific Counselors (BSC) that will assist the BSC in advising the Director about NIOSH's efforts to establish and operate the National Firefighter Registry. The Subcommittee advises the Board of Scientific Counselors (BSC) on the following issues pertaining to the ''required strategy'' as mandated by the Firefighter Cancer Registry Act of 2018 (the Act): (1) Increase awareness of the National Firefighter Registry and encouraging participation among all groups of firefighters, (2) consider data collection needs, (3) consider data storage and electronic access of health information, (4) in consultation with subject matter experts develop a method for estimating the number and type of fire incidents attended by a firefighter. Additional responsibilities of the Subcommittee are to provide guidance to the BSC regarding inclusion and the maintenance of data on firefighters as required by the Act.

Matters to be Considered: The agenda for the meeting addresses issues related to: The National Firefighter Registry Subcommittee draft report pertaining to the protocol including the questionnaire, enrollment process, and data sharing. The subcommittee will review the draft report, suggest and discuss changes, and vote on the draft report. Agenda items are subject to change as priorities dictate. An agenda is also posted on the NIOSH website *https://www.cdc.gov/niosh/bsc/nfrs/.*

The Director, Strategic Business Initiatives Unit, Office of the Chief Operating Officer, Centers for Disease Control and Prevention, has been delegated the authority to sign **Federal Register** notices pertaining to announcements of meetings and other committee management activities, for both the Centers for Disease Control and Prevention and the Agency for Toxic Substances and Disease Registry.

Kalwant Smagh,

Director, Strategic Business Initiatives Unit, Office of the Chief Operating Officer, Centers for Disease Control and Prevention.

[FR Doc. 2020–12267 Filed 6–5–20; 8:45 am]

BILLING CODE 4163–18–P

DEPARTMENT OF HEALTH AND HUMAN SERVICES

Centers for Medicare & Medicaid Services

[Document Identifier CMS–R–290]

Agency Information Collection Activities: Submission for OMB Review; Comment Request

AGENCY: Centers for Medicare & Medicaid Services, HHS.

ACTION: Notice.

SUMMARY: The Centers for Medicare & Medicaid Services (CMS) is announcing an opportunity for the public to comment on CMS' intention to collect information from the public. Under the Paperwork Reduction Act of 1995 (PRA), federal agencies are required to publish notice in the **Federal Register** concerning each proposed collection of information, including each proposed extension or reinstatement of an existing collection of information, and to allow a second opportunity for public comment on the notice. Interested persons are invited to send comments regarding the burden estimate or any other aspect of this collection of information, including the necessity and utility of the proposed information collection for the proper performance of the agency's functions, the accuracy of the estimated burden, ways to enhance the quality, utility, and clarity of the information to be collected, and the use of automated collection techniques or other forms of information technology to minimize the information collection burden.

DATES: Comments on the collection(s) of information must be received by the OMB desk officer by July 8, 2020.

ADDRESSES: Written comments and recommendations for the proposed information collection should be sent within 30 days of publication of this notice to *www.reginfo.gov/public/do/PRAMain.* Find this particular information collection by selecting ''Currently under 30-day Review—Open for Public Comments'' or by using the search function.

To obtain copies of a supporting statement and any related forms for the proposed collection(s) summarized in this notice, you may make your request using one of following:

1. Access CMS' website address at *https://www.cms.gov/Regulations-and-Guidance/Legislation/PaperworkReductionActof1995/PRA-Listing.html.*

1. Email your request, including your address, phone number, OMB number, and CMS document identifier, to *Paperwork@cms.hhs.gov.*

2. Call the Reports Clearance Office at (410) 786–1326.

FOR FURTHER INFORMATION CONTACT: William Parham at (410) 786–4669.

SUPPLEMENTARY INFORMATION: Under the Paperwork Reduction Act of 1995 (PRA) (44 U.S.C. 3501–3520), federal agencies must obtain approval from the Office of Management and Budget (OMB) for each collection of information they conduct or sponsor. The term ''collection of information'' is defined in 44 U.S.C. 3502(3) and 5 CFR 1320.3(c) and includes agency requests or requirements that members of the public submit reports, keep records, or provide information to a third party. Section 3506(c)(2)(A) of the PRA (44 U.S.C. 3506(c)(2)(A)) requires federal agencies to publish a 30-day notice in the **Federal Register** concerning each proposed collection of information, including each proposed extension or reinstatement of an existing collection of information, before submitting the collection to OMB for approval. To comply with this requirement, CMS is publishing this notice that summarizes the following proposed collection(s) of information for public comment:

1. *Type of Information Collection Request:* Reinstatement without change of a previously approved collection; *Title:* Medicare Program: Procedures for Making National Coverage Decisions;

Use: This collection is required by a notice (78 FR 48164–69) published on August 7, 2013 which delineates the process for making a national coverage determination (NCD) including information for external parties to submit a formal request for a new NCD or a reconsideration of an existing NCD. An NCD is defined in 1862(l) of the Social Security Act (the Act) as ''a determination by the Secretary with respect to whether or not a particular item or service is covered nationally under this title.'' This information collection will assist us in obtaining the information we require to make a national coverage determination in a timely manner and ensuring that the Medicare program continues to meet the needs of its beneficiaries. *Form Number:* CMS–R–290 (OMB control number: 0938–0776); *Frequency:* Annual; *Affected Public:* Private Sector: Business or other for-profits; *Number of Respondents:* 30; *Total Annual Responses:* 30; *Total Annual Hours:* 1,200. (For policy questions regarding this collection contact Lori M. Ashby at 410–786–6322.)

Dated: June 2, 2020.

William N. Parham, III,

Director, Paperwork Reduction Staff, Office of Strategic Operations and Regulatory Affairs.

[FR Doc. 2020–12287 Filed 6–5–20; 8:45 am]

BILLING CODE 4120–01–P

DEPARTMENT OF HEALTH AND HUMAN SERVICES

Centers for Medicare & Medicaid Services

[Document Identifier: CMS–10114, CMS–10199, CMS–R–52 and CMS–R–26]

Agency Information Collection Activities: Proposed Collection; Comment Request

AGENCY: Centers for Medicare & Medicaid Services, HHS.

ACTION: Notice.

SUMMARY: The Centers for Medicare & Medicaid Services (CMS) is announcing an opportunity for the public to comment on CMS' intention to collect information from the public. Under the Paperwork Reduction Act of 1995 (the PRA), federal agencies are required to publish notice in the **Federal Register** concerning each proposed collection of information (including each proposed extension or reinstatement of an existing collection of information) and to allow 60 days for public comment on the proposed action. Interested persons are invited to send comments regarding our burden estimates or any other aspect of this collection of information, including the necessity and utility of the proposed information collection for the proper performance of the agency's functions, the accuracy of the estimated burden, ways to enhance the quality, utility, and clarity of the information to be collected, and the use of automated collection techniques or other forms of information technology to minimize the information collection burden.

DATES: Comments must be received by August 7, 2020.

ADDRESSES: When commenting, please reference the document identifier or OMB control number. To be assured consideration, comments and recommendations must be submitted in any one of the following ways:

1. *Electronically.* You may send your comments electronically to *http://www.regulations.gov.* Follow the instructions for ''Comment or Submission'' or ''More Search Options'' to find the information collection document(s) that are accepting comments.

2. *By regular mail.* You may mail written comments to the following address: CMS, Office of Strategic Operations and Regulatory Affairs, Division of Regulations Development, Attention: Document Identifier/OMB Control Number _____, Room C4–26–05, 7500 Security Boulevard, Baltimore, Maryland 21244–1850.

To obtain copies of a supporting statement and any related forms for the proposed collection(s) summarized in this notice, you may make your request using one of following:

1. Access CMS' website address at *https://www.cms.gov/Regulations-and-Guidance/Legislation/PaperworkReductionActof1995/PRA-Listing.html.*

2. Email your request, including your address, phone number, OMB number, and CMS document identifier, to *Paperwork@cms.hhs.gov.*

3. Call the Reports Clearance Office at (410) 786–1326.

FOR FURTHER INFORMATION CONTACT: William N. Parham at (410) 786–4669.

SUPPLEMENTARY INFORMATION:

Contents

This notice sets out a summary of the use and burden associated with the following information collections. More detailed information can be found in each collection's supporting statement and associated materials (see **ADDRESSES**).

CMS–10114 National Provider Identifier (NPI) Application and Update Form and Supporting Regulations in 45 CFR 142.408, 45 CFR 162.406, 45 CFR 162.408

CMS–10199 Data Collection for Medicare Facilities Performing Carotid Artery Stenting with Embolic Protection in Patients at High Risk for Carotid Endarterectomy

CMS–R–52 Conditions for Coverage of Suppliers of End Stage Renal Disease (ESRD) Services and Supporting Regulations

CMS–R–26 Clinical Laboratory Improvement Amendments (CLIA) Regulations

Under the PRA (44 U.S.C. 3501–3520), federal agencies must obtain approval from the Office of Management and Budget (OMB) for each collection of information they conduct or sponsor. The term ''collection of information'' is defined in 44 U.S.C. 3502(3) and 5 CFR 1320.3(c) and includes agency requests or requirements that members of the public submit reports, keep records, or provide information to a third party. Section 3506(c)(2)(A) of the PRA requires federal agencies to publish a 60-day notice in the **Federal Register** concerning each proposed collection of information, including each proposed extension or reinstatement of an existing collection of information, before submitting the collection to OMB for approval. To comply with this requirement, CMS is publishing this notice.

Information Collection

1. *Type of Information Collection Request:* Extension of a currently approved collection; *Title of Information Collection:* National Provider Identifier (NPI) Application and Update Form and Supporting Regulations in 45 CFR 142.408, 45 CFR 162.406, 45 CFR 162.408; *Use:* The National Provider Identifier Application and Update Form is used by health care providers to apply for NPIs and furnish updates to the information they supplied on their initial applications. The form is also used to deactivate their NPIs if necessary. The form is available on paper or can be completed via a web-based process. Health care providers can mail a paper application, complete the application via the web-based process via the National Plan and Provider Enumeration System (NPPES), or have a trusted organization submit the application on their behalf via the Electronic File Interchange (EFI) process. The Enumerator uses the NPPES to process the application and generate the NPI. NPPES is the Medicare contractor tasked with issuing NPIs, and maintaining and storing NPI data. *Form Number:* CMS–10114 (OMB Control

Number: 0938–0931); *Frequency:* Reporting—On occasion; *Affected Public:* Business or other for-profit, Not-for-profit institutions, and Federal government; *Number of Respondents:* 996,042; *Total Annual Responses:* 996,042; *Total Annual Hours:* 169,327. (For policy questions regarding this collection contact Da'Vona Boyd at 410–786–7483.)

2. *Type of Information Collection Request: Extension of a currently approved collection; Title of Information Collection:* Data Collection for Medicare Facilities Performing Carotid Artery Stenting with Embolic Protection in Patients at High Risk for Carotid Endarterectomy; *Use:* CMS provides coverage for carotid artery stenting (CAS) with embolic protection for patients at high risk for carotid endarterectomy and who also have symptomatic carotid artery stenosis between 50 percent and 70 percent or have asymptomatic carotid artery stenosis ≥80 percent in accordance with the Category B IDE clinical trials regulation (42 CFR 405.201), a trial under the CMS Clinical Trial Policy (NCD Manual § 310.1, or in accordance with the National Coverage Determination on CAS post approval studies (Medicare NCD Manual 20.7 CMS also covers CAS with embolic protection for patients at high risk for carotid endarterectomy and who also have symptomatic carotid artery stenosis ≥70 percent performed in facilities that have been determined to be competent in performing the evaluation, procedure and follow-up necessary to ensure optimal patient outcomes. In accordance with this criteria, we consider coverage for CAS reasonable and necessary (section 1862 (A)(1)(a) of the Social Security Act). *Form Number:* CMS–10199 (OMB control number: 0938–1011)*; Frequency:* Yearly; *Affected Public:* Business or other for-profit and Not-for-profit institutions; *Number of Respondents:* 1,420; *Total Annual Responses:* 3,313; *Total Annual Hours:* 30,057. *(For policy questions regarding this collection contact Sarah Fulton at 410–786–2749.)*

3. *Type of Information Collection Request:* Extension of a previously approved collection; *Title of Information Collection:* Conditions for Coverage of Suppliers of End Stage Renal Disease (ESRD) Services and Supporting Regulations; *Use:* The information collection requirements described herein are part of the Medicare and Medicaid Programs; Conditions for Coverage for End-Stage Renal Disease Facilities. The requirements fall into three categories: Record keeping, reporting, and disclosure. With regard to the record keeping requirements, CMS uses these conditions for coverage to certify health care facilities that want to participate in the Medicare or Medicaid programs. For the reporting requirements, the information is needed to assess and ensure proper distribution and effective utilization of ESRD treatment resources while maintaining or improving quality of care. All of the reports specified in this document are geared toward ensuring that facilities achieve quality and cost-effective service provision. Collection of this information is authorized by Section 1881 of the Act and required by 42 CFR 405.2100 through 405.2171 (now at 42 CFR 414.330, 488.60, and 494.100–494.180). Depending on the outcome of litigation, disclosures may be required by Medicare-certified dialysis facilities that make payments of premiums for individual market health plans. *Form Number:* CMS–R–52 (OMB Control Number: 0938–0386); *Frequency:* Annually; *Affected Public:* Private sector—Business or other for-profit; *Number of Respondents:* 8,246; *Total Annual Responses:* 171,795; *Total Annual Hours:* 1,260,491. (For policy questions regarding this collection contact Eric Laib at 410–786–9759.)

4. *Type of Information Collection Request:* Extension of a currently approved collection; *Title of Information Collection:* Clinical Laboratory Improvement Amendments (CLIA) Regulations; *Use:* The information is necessary to determine an entity's compliance with the Congressionally-mandated program with respect to the regulation of laboratory testing (CLIA). In addition, laboratories participating in the Medicare program must comply with CLIA requirements as required by section 6141 of OBRA 89. Medicaid, under the authority of section 1902(a)(9)(C) of the Social Security Act, pays for services furnished only by laboratories that meet Medicare (CLIA) requirements. *Form Number:* CMS–R–26 (OMB Control Number: 0938–0612); *Frequency:* Monthly, occasionally; *Affected Public:* Business or other for-profits and Not-for-profit institutions, State, Local or Tribal Governments, and the Federal government; *Number of Respondents:* 34,579; *Total Annual Responses:* 74,476,376; *Total Annual Hours:* 14,514,802. (For policy questions regarding this collection contact Raelene Perfetto at 410–786–6876).

Dated: June 2, 2020.

William N. Parham, III,

Director, Paperwork Reduction Staff, Office of Strategic Operations and Regulatory Affairs.

[FR Doc. 2020–12285 Filed 6–5–20; 8:45 am]

BILLING CODE 4120–01–P

DEPARTMENT OF HEALTH AND HUMAN SERVICES

Food and Drug Administration

[Docket No. FDA–2010–N–0128]

Reauthorization of the Prescription Drug User Fee Act; Public Meeting; Request for Comments

AGENCY: Food and Drug Administration, HHS.

ACTION: Notice of public meeting; request for comments.

SUMMARY: The Food and Drug Administration (FDA or Agency) is hosting a virtual public meeting to discuss proposed recommendations for the reauthorization of the Prescription Drug User Fee Act (PDUFA) for fiscal years (FYs) 2023 through 2027. PDUFA authorizes FDA to collect user fees to support the process for the review of human drug applications. The current legislative authority for PDUFA expires in September 2022. At that time, new legislation will be required for FDA to continue collecting prescription drug user fees in future fiscal years. The Federal Food, Drug, and Cosmetic Act (FD&C Act) directs that FDA begin the PDUFA reauthorization process by publishing a notice in the **Federal Register** requesting public input and holding a public meeting where the public may present its views on the reauthorization. FDA invites public comment as the Agency begins the process to reauthorize the program in FYs 2023 through 2027. These comments will be published and available on FDA's website.

DATES: The public meeting will be held on July 23, 2020, from 9 a.m. to 2 p.m., and will take place virtually and will be held by webcast only. Submit either electronic or written comments on this public meeting by August 23, 2020.

ADDRESSES: Registration to attend the meeting and other information can be found at *https://pdufavii-publicmeeting.eventbrite.com.* See the **SUPPLEMENTARY INFORMATION** section for registration date and information.

You may submit comments as follows. Please note that late, untimely filed comments will not be considered. Electronic comments must be submitted on or before August 23, 2020. The

https://www.regulations.gov electronic filing system will accept comments until 11:59 p.m. Eastern Time at the end of August 23, 2020. Comments received by mail/hand delivery/courier (for written/paper submissions) will be considered timely if they are postmarked or the delivery service acceptance receipt is on or before that date.

Electronic Submissions

Submit electronic comments in the following way:

• *Federal eRulemaking Portal: https://www.regulations.gov.* Follow the instructions for submitting comments. Comments submitted electronically, including attachments, to *https://www.regulations.gov* will be posted to the docket unchanged. Because your comment will be made public, you are solely responsible for ensuring that your comment does not include any confidential information that you or a third party may not wish to be posted, such as medical information, your or anyone else's Social Security number, or confidential business information, such as a manufacturing process. Please note that if you include your name, contact information, or other information that identifies you in the body of your comments, that information will be posted on *https://www.regulations.gov.*

• If you want to submit a comment with confidential information that you do not wish to be made available to the public, submit the comment as a written/paper submission and in the manner detailed (see ''Written/Paper Submissions'' and ''Instructions'').

Written/Paper Submissions

Submit written/paper submissions as follows:

• *Mail/Hand delivery/Courier (for written/paper submissions):* Dockets Management Staff (HFA–305), Food and Drug Administration, 5630 Fishers Lane, Rm. 1061, Rockville, MD 20852.

• For written/paper comments submitted to the Dockets Management Staff, FDA will post your comment, as well as any attachments, except for information submitted, marked, and identified, as confidential, if submitted as detailed in ''Instructions.''

Instructions: All submissions received must include the Docket No. FDA–2010–N–0128 for ''Reauthorization of the Prescription Drug User Fee Act; Public Meeting; Request for Comments.'' Received comments, those filed in a timely manner (see **ADDRESSES**), will be placed in the docket and, except for those submitted as ''Confidential Submissions,'' publicly viewable at *https://www.regulations.gov* or at the Dockets Management Staff between 9 a.m. and 4 p.m., Monday through Friday.

• Confidential Submissions—To submit a comment with confidential information that you do not wish to be made publicly available, submit your comments only as a written/paper submission. You should submit two copies total. One copy will include the information you claim to be confidential with a heading or cover note that states ''THIS DOCUMENT CONTAINS CONFIDENTIAL INFORMATION.'' The Agency will review this copy, including the claimed confidential information, in its consideration of comments. The second copy, which will have the claimed confidential information redacted/blacked out, will be available for public viewing and posted on *https://www.regulations.gov.* Submit both copies to the Dockets Management Staff. If you do not wish your name and contact information to be made publicly available, you can provide this information on the cover sheet and not in the body of your comments and you must identify this information as ''confidential.'' Any information marked as ''confidential'' will not be disclosed except in accordance with 21 CFR 10.20 and other applicable disclosure law. For more information about FDA's posting of comments to public dockets, see 80 FR 56469, September 18, 2015, or access the information at: *https://www.govinfo.gov/content/pkg/FR-2015-09-18/pdf/2015-23389.pdf.*

Docket: For access to the docket to read background documents or the electronic and written/paper comments received, go to *https://www.regulations.gov* and insert the docket number, found in brackets in the heading of this document, into the ''Search'' box and follow the prompts and/or go to the Dockets Management Staff, 5630 Fishers Lane, Rm. 1061, Rockville, MD 20852, 240–402–7500. Transcripts of the meeting will be available on the FDA website at: *https://www.fda.gov/ForIndustry/UserFees/PrescriptionDrugUserFee* approximately 30 days after the meeting.

FOR FURTHER INFORMATION CONTACT:

Patrick Zhou, Center for Drug Evaluation and Research, Food and Drug Administration, 10903 New Hampshire Ave., Bldg. 51, Rm. 1148, Silver Spring, MD 20993–0002, 301–348–1817, *Patrick.Zhou@fda.hhs.gov.*

SUPPLEMENTARY INFORMATION:

I. Background

FDA is announcing a virtual public meeting to begin the reauthorization process of PDUFA, the legislation that authorizes FDA to collect user fees to support the process for the review of human drugs, including various components in FDA including the Center for Drug Evaluation and Research (CDER), the Center for Biologics Evaluation and Research (CBER), the Office of the Commissioner (OC), and the Office of Regulatory Affairs (ORA). The current authorization of the program (PDUFA VI) expires in September 2022. Without new legislation, FDA will no longer be able to collect user fees for future fiscal years to fund the human drug review process. Section 736B(f)(2) of the FD&C Act (21 U.S.C. 379h–2(f)(2)) requires that before FDA begins negotiations with the regulated industry on PDUFA reauthorization, the Agency performs the following: (1) Publish a notice in the **Federal Register** requesting public input on the reauthorization; (2) hold a public meeting where the public may present its views on the reauthorization; (3) provide a period of 30 days after the public meeting to obtain written comments from the public; and (4) publish the comments at *https://www.fda.gov.* This notice, the public meeting, the 30-day comment period after the meeting, and the posting of the comments on the FDA website will satisfy these requirements. The purpose of the meeting is to hear stakeholder views on PDUFA as we consider the features to propose, update, and discontinue in the next PDUFA. FDA is interested in responses to the following three questions and welcomes any other pertinent information stakeholders would like to share:

• What is your assessment of the overall performance of PDUFA VI thus far?

• What current features of PDUFA should be reduced or discontinued to ensure the continued efficiency and effectiveness of the human drug review process?

• What new features should FDA consider adding to the program to enhance the efficiency and effectiveness of the human drug review process?

II. What is PDUFA? What does it do?

The following information is provided to help potential meeting participants better understand the history and evolution of PDUFA and its status. The Prescription Drug User Fee Act (PDUFA) is a law that authorizes FDA to collect fees from drug companies that submit marketing applications for certain human drug and biological products. PDUFA was originally enacted in 1992 as the Prescription Drug User Fee Act (Pub. L. 102–571) for a period of 5 years.

In 1997, Congress passed the Food and Drug Administration Modernization Act of 1997 (FDAMA, Pub. L. 105–115), which renewed the program (PDUFA II) for an additional 5 years. Congress extended PDUFA again for another 5 years (PDUFA III), through FY 2007, in the Public Health Security and Bioterrorism Preparedness and Response Act of 2002 (Pub. L. 107–188). In 2007, Title I of the Food and Drug Administration Amendments Act of 2007 (FDAAA, Pub. L. 110–85) reauthorized PDUFA through FY 2012 (PDUFA IV, Pub. L. 112–144) and in 2012 the Food and Drug Administration Safety and Innovation Act (FDASIA) reauthorized the law again through FY 2017 (PDUFA V). PDUFA was most recently renewed in 2017 under Title I of the FDA Reauthorization Act of 2017 (FDARA) which lasts through FY 2022 (PDUFA VI).

PDUFA's intent is to provide additional revenues so that FDA can hire more staff, improve systems, and establish a better managed human drug review process to make important therapies available to patients sooner without compromising review quality or FDA's high standards for safety, efficacy, and quality. As part of FDA's negotiated agreement with industry during each reauthorization, the Agency agrees to certain performance and procedural goals and other commitments that apply to aspects of the human drug review program. These goals apply, for example, to the process for the review of original new human drug and biological product applications, postmarket safety activities, and new data standards and technology enhancements.

During the first few years of PDUFA I, the additional funding enabled FDA to eliminate backlogs of original applications and supplements. Phased in over the 5 years of PDUFA I, the goals were to review and act on 90 percent of priority new drug applications (NDAs), biologics license applications (BLAs), and efficacy supplements within 6 months of submission of a complete application; to review and act on 90 percent of standard original NDAs, BLAs, and efficacy supplements within 12 months, and to review and act on resubmissions and manufacturing supplements within 6 months. Over the course of PDUFA I, FDA exceeded all these performance goals and significantly reduced median review times of both priority and standard NDAs and BLAs.

Under PDUFA II, the review performance goals were shortened, and new procedural goals were added to improve FDA's interactions with industry sponsors and to help facilitate the drug development process. The procedural goals, for example, articulated time frames for scheduling sponsor-requested meetings intended to address issues or questions regarding specific drug development programs, as well as time frames for the timely response to industry-submitted questions on special study protocols. FDA met or exceeded all the review and procedural goals under PDUFA II. However, concerns grew that overworked review teams often had to return applications as ''approvable'' because they did not have the resources and sufficient staff time to work with the sponsors to resolve issues so that applications could be approved in the first review cycle.

A sound financial footing and support for limited postmarket risk management were key themes of PDUFA III. Base user fee resources were significantly increased and a mechanism to account for changes in human drug review workload was adopted. PDUFA III also expanded the scope of user fee activities to include postmarket surveillance of new therapies for up to 3 years after marketing approval. FDA committed to the development of guidance for industry on risk assessment, risk management, and pharmacovigilance, as well as guidance to review staff and industry on review management principles. In September 2018 the draft guidance, ''Good Review Management Principles and Practices for New Drug Applications and Biologics License Applications'' (GRMPs), available at *https://www.fda.gov/regulatory-information/search-fda-guidance-documents/good-review-management-principles-and-practices-new-drug-applications-and-biologics-license,* was published.[1] Initiatives to improve application submission and Agency-sponsor interactions during the drug development and application review processes were also adopted.

With PDUFA's reauthorization under FDAAA Title I (PDUFA IV), FDA obtained a significant increase in base fee funding and committed to full implementation of GRMPs, which included providing a planned review timeline for premarket review, development of new guidance for industry on innovative clinical trials, modernization of postmarket safety, and elimination of the 3-year limitation on fee support for postmarket surveillance. Additional provisions in FDAAA (Titles IV, V, and IX) gave FDA additional statutory authority that increased the pre- and postmarket review process requirements, added new deadlines, and effectively increased review workload. Specifically, the new provisions expanded FDA's drug safety authorities, such as the authority to require risk evaluation mitigation strategies (REMS), order safety labeling changes, and require postmarket studies.

Under Title I of FDASIA, the fourth renewal of PDUFA, FDA implemented a new review program (''the Program'') to promote greater transparency and increase communication between the FDA review team and the applicant on the most innovative products reviewed by the Agency. The Program applied to all new molecular entity (NME) NDAs and original BLAs received by the Agency from October 1, 2012, through September 30, 2017. The Program added new opportunities for communication between the FDA review team and the applicant during review of a marketing application, including mid-cycle communications and late-cycle meetings, while adding 60 days to the review clock to provide for this increased interaction and to address review issues for these complex applications. PDUFA V also required an assessment of the impact of the Program. The independent assessment of the Program entitled ''Assessment of the Program for Enhanced Review Transparency and Communication for NME NDAs and Original BLAs in PDUFA V,'' is available at: *https://www.fda.gov/media/101907/download.*

In addition to continued commitment to a significant set of review, processing, and procedural goals, PDUFA V also included commitments related to enhancing regulatory science and expediting drug development, enhancing benefit-risk assessment in regulatory decision-making, modernizing the FDA drug safety system, and improving the efficiency of human drug review by requiring electronic submissions and standardization of electronic drug application data.

In August 2017, FDARA was enacted, which renewed the prescription drug user fee program for a sixth time. This iteration of the program continued and built upon the successes of PDUFA V. In PDUFA VI, FDA and industry members agreed to continue ''the Program'' model developed in PDUFA V to continue to promote the efficiency and effectiveness of the first cycle review process. PDUFA VI includes commitments to enhance regulatory science and expedite drug development by focusing on enhancing communication between FDA and sponsors during drug development,

[1] When finalized this will represent FDA's current thinking on this issue.

early consultation on the use of new surrogate endpoints, and exploring the use of real world evidence for use in regulatory decision-making, among other enhancements. This iteration includes commitments to enhance the use of regulatory tools to support drug development and review through incorporation of the patient's voice in drug development, expanded use of a benefit-risk framework in drug reviews, and advancing the use of complex innovative trial designs and model informed drug development. More information on these commitments can be found in the PDUFA VI commitment letter at: *https://www.fda.gov/media/99140/download.*

As part of the current authorization, FDA also modernized the user fee structure to improve program funding predictability, stability, and administrative efficiency. The new structure eliminated the supplement fees, replaced the establishment and product fees with a program fee, and shifted a greater proportion of the target revenue to the new more predictable and stable annual program fee. The agreement also included commitments to enhance management of user fee resources through the development of a resource capacity planning capability and third-party evaluation of program resource management, along with the publication and annual update of a 5-year financial plan.

Recognizing the challenges with hiring in PDUFA V, the current authorization also includes several commitments to improve the hiring and retention of critical review staff through modernization of FDA's hiring system, augmentation of hiring staff capacity and capabilities, creation of a dedicated function focused on staffing the program, reporting on hiring metrics, and a comprehensive and continuous assessment of hiring and retention. A list of the deliverables developed to meet PDUFA VI commitments is available on the FDA web page at: *https://www.fda.gov/industry/prescription-drug-user-fee-amendments/completed-pdufa-vi-deliverables.*

III. Public Meeting Information

A. Purpose and Scope of the Meeting

In general, the meeting format will include presentations by FDA and a series of panels representing different stakeholder groups. We will also provide an opportunity for other stakeholders to provide public comment at the meeting. FDA policy issues are beyond the scope of these reauthorization discussions. Accordingly, the presentations should focus on process enhancements and funding issues, and not focus on policy issues.

B. Participating in the Public Meeting

Registration: Persons interested in attending this virtual public meeting should register online by 11:59 p.m. Eastern Time on June 23, 2020, at *http://pdufavii-publicmeeting.eventbrite.com.* Please provide complete contact information for each attendee, including name, title, affiliation, email, and telephone.

Opportunity for Public Comment: Those who register online by June 23, 2020, will receive a notification about an opportunity to participate in the public comment session of the meeting. If you wish to speak during the public comment session, follow the instructions in the notification and identify which topic(s) you wish to address. We will do our best to accommodate requests to make public comments. Individuals and organizations with common interests are urged to consolidate or coordinate their comments and request time jointly. All requests to make a public comment during the meeting must be received by July 9, 2020, 11:59 p.m. Eastern Time. We will determine the amount of time allotted to each commenter, the approximate time each comment is to begin, and will select and notify participants by July 16, 2020. No commercial or promotional material will be permitted to be presented at the public meeting.

Streaming Webcast of the Public Meeting: The webcast for this public meeting is available at *https://collaboration.fda.gov/pdufajuly2020/.*

If you have never attended a Connect Pro event before, test your connection at *https://collaboration.fda.gov/common/help/en/support/meeting_test.htm.* To get a quick overview of the Connect Pro program, visit *https://www.adobe.com/go/connectpro_overview.* FDA has verified the website addresses in this document, as of the date this document publishes in the **Federal Register**, but websites are subject to change over time.

Transcripts: Please be advised that as soon as a transcript of the public meeting is available, it will be accessible at *https://www.regulations.gov.* It may be viewed at the Dockets Management Staff (see **ADDRESSES**). A link to the transcript will also be available on the internet at *https://www.fda.gov/industry/fda-user-fee-programs/prescription-drug-user-fee-amendments.*

Dated: June 2, 2020.

Lowell J. Schiller,

Principal Associate Commissioner for Policy.

[FR Doc. 2020–12317 Filed 6–5–20; 8:45 am]

BILLING CODE 4164–01–P

DEPARTMENT OF HEALTH AND HUMAN SERVICES

Health Resources and Services Administration

Agency Information Collection Activities: Proposed Collection: Public Comment Request; Information Collection Request Title: Maternal Health Portfolio Evaluation Design, OMB No. 0906–xxxx—NEW

AGENCY: Health Resources and Services Administration (HRSA), Department of Health and Human Services.

ACTION: Notice.

SUMMARY: In compliance with the requirement for opportunity for public comment on proposed data collection projects of the Paperwork Reduction Act of 1995, HRSA announces plans to submit an Information Collection Request (ICR), described below, to the Office of Management and Budget (OMB). Prior to submitting the ICR to OMB, HRSA seeks comments from the public regarding the burden estimate, below, or any other aspect of the ICR.

DATES: Comments on this ICR should be received no later than August 7, 2020.

ADDRESSES: Submit your comments to *paperwork@hrsa.gov* or mail the HRSA Information Collection Clearance Officer, Room 14N136B, 5600 Fishers Lane, Rockville, MD 20857.

FOR FURTHER INFORMATION CONTACT: To request more information on the proposed project or to obtain a copy of the data collection plans and draft instruments, email *paperwork@hrsa.gov* or call Lisa Wright-Solomon, the HRSA Information Collection Clearance Officer at (301) 443–1984.

SUPPLEMENTARY INFORMATION: When submitting comments or requesting information, please include the information request collection title for reference.

Information Collection Request Title: Maternal Health Portfolio Evaluation Design OMB No. 0906–xxxx—NEW.

Abstract: HRSA programs provide health care to people who are geographically isolated, economically, or medically vulnerable. HRSA programs help those in need of high quality primary health care, such as pregnant women and mothers. Improving maternal health outcomes and access to quality maternity care

services is a key component of the HRSA mission. HRSA's Maternal and Child Health Bureau (MCHB) provides funding to address some of the most urgent issues influencing the high rates of maternal mortality. Recent efforts to address persistent disparities in maternal, infant, and child health have employed a ''life course'' perspective and health equity lens focused on health promotion and disease prevention. The life course approach can be defined as analyzing people's lives within structural, social, and cultural contexts through a defined sequence of age categories that people are normally expected to pass through as they progress from birth to death. Health equity is defined as the attainment of the highest level of health for all people.

Achieving health equity for pregnant and postpartum women will require attention to barriers in access to quality health services and promotion of equal opportunities to seek the highest possible level of health and well-being. Achieving health equity also requires a focus on social determinants of health.

With this emphasis on improving maternal health across the life course and promoting optimal health for all mothers, HRSA is employing a multipronged strategy to address maternal mortality and severe maternal morbidity through the following suite of programs:

1. The State Maternal Health Innovation Program,
2. The Alliance for Innovation on Maternal Health Program,
3. The Alliance for Innovation on Maternal Health—Community Care Initiative,
4. The Rural Maternity and Obstetrics Management Strategies Program, and
5. The Supporting Maternal Health Innovation Program.

MCHB is conducting a portfolio-wide evaluation of HRSA-supported Maternal Health Programs with a primary focus on reducing maternal mortality. Through this evaluation, HRSA seeks to identify individual and/or collective strategies, interrelated activities, and common themes within and across the Maternal Health Programs that may be contributing to or driving improvements in key maternal health outcomes. HRSA seeks to ascertain which components should be elevated and replicated to the national level, as well as inform future investments to reduce rates of maternal mortality and severe maternal morbidity.

Need and Proposed Use of the Information: HRSA seeks to understand the impact of HRSA's investments into maternal health programs. These five HRSA maternal health programs represent a total of 12 state-based grantees and three grantees with the potential for national reach. In understanding the strategies that are most effective in reducing maternal morbidity and mortality, HRSA will be able to determine which program elements could be replicated and/or scaled up nationally.

Likely Respondents: Likely respondents are recipients of the cooperative agreements mentioned above (State Maternal Health Innovation Program, Alliance for Innovation on Maternal Health Program, Alliance for Innovation on Maternal Health—Community Care Initiative, Rural Maternity and Obstetrics Management Strategies Program, and Supporting Maternal Health Innovation Program) which include 11 state health agencies, 2 national organizations, and 2 academic organizations.

Burden Statement: Burden in this context means the time expended by persons to generate, maintain, retain, disclose or provide the information requested. This includes the time needed to review instructions; to develop, acquire, install and utilize technology and systems for the purpose of collecting, validating and verifying information, processing and maintaining information, and disclosing and providing information; to train personnel and to be able to respond to a collection of information; to search data sources; to complete and review the collection of information; and to transmit or otherwise disclose the information. The total annual burden hours estimated for this ICR are summarized in the table below.

TOTAL ESTIMATED ANNUALIZED BURDEN HOURS

Form name	Number of respondents	Number of responses per respondent	Total responses	Average burden per response (in hours)	Total burden hours
Instrument 1: Interview guide for grantee staff	75	1	75	1.00	75.0
Instrument 2: Interview guide for HRSA POs	7	1	7	1.50	10.5
Instrument 3: Partnership Survey	290	1	290	0.25	72.5
Instrument 4: Web-based data collection tool	15	1	15	0.50	7.5
Total	387		387		165.5

HRSA specifically requests comments on (1) the necessity and utility of the proposed information collection for the proper performance of the agency's functions, (2) the accuracy of the estimated burden, (3) ways to enhance the quality, utility, and clarity of the information to be collected, and (4) the use of automated collection techniques or other forms of information technology to minimize the information collection burden.

Maria G. Button,

Director, Executive Secretariat.

[FR Doc. 2020–12308 Filed 6–5–20; 8:45 am]

BILLING CODE 4165–15–P

DEPARTMENT OF HEALTH AND HUMAN SERVICES

Office of the Secretary

Second Amendment to Declaration Under the Public Readiness and Emergency Preparedness Act for Medical Countermeasures Against COVID–19

ACTION: Notice of amendment.

SUMMARY: The Secretary issues this amendment pursuant to section 319F–3 of the Public Health Service Act to clarify that Covered Countermeasures

under the Declaration include qualified pandemic and epidemic products that limit the harm COVID–19 might otherwise cause.

DATES: This amendment to the Declaration as published on March 17, 2020 (85 FR 15198) was effective as of February 4, 2020.

FOR FURTHER INFORMATION CONTACT: Robert P. Kadlec, MD, MTM&H, MS, Assistant Secretary for Preparedness and Response, Office of the Secretary, Department of Health and Human Services, 200 Independence Avenue SW, Washington, DC 20201; Telephone: 202–205–2882.

SUPPLEMENTARY INFORMATION: The Public Readiness and Emergency Preparedness Act (PREP Act) authorizes the Secretary of Health and Human Services (the Secretary) to issue a Declaration to provide liability immunity to certain individuals and entities (Covered Persons) against any claim of loss caused by, arising out of, relating to, or resulting from, the manufacture, distribution, administration, or use of medical countermeasures (Covered Countermeasures), except for claims involving ''willful misconduct'' as defined in the PREP Act. Under the PREP Act, a Declaration may be amended as circumstances warrant.

The PREP Act was enacted on December 30, 2005, as Public Law 109–148, Division C, § 2. It amended the Public Health Service (PHS) Act, adding section 319F–3, which addresses liability immunity, and section 319F–4, which creates a compensation program. These sections are codified at 42 U.S.C. 247d–6d and 42 U.S.C. 247d–6e, respectively. Section 319F–3 of the PHS Act has been amended by the Pandemic and All-Hazards Preparedness Reauthorization Act (PAHPRA), Public Law 113–5, enacted on March 13, 2013, and the Coronavirus Aid, Relief, and Economic Security (CARES) Act, Public Law 116–136, enacted on March 27, 2020, to expand Covered Countermeasures under the PREP Act.

On January 31, 2020, the Secretary declared a public health emergency pursuant to section 319 of the PHS Act, 42 U.S.C. 247d, effective January 27, 2020, for the entire United States to aid in the response of the nation's health care community to the COVID–19 outbreak. Pursuant to section 319 of the PHS Act, the Secretary renewed that Declaration on April 26, 2020. On March 10, 2020, the Secretary issued a Declaration under the PREP Act for medical countermeasures against COVID–19 (85 FR 15198, Mar. 17, 2020). On April 10, the Secretary amended the March 10, 2020 Declaration under the PREP Act to extend liability immunity to covered countermeasures authorized under the CARES Act (85 FR 21012, Apr. 15, 2020).

The Secretary now amends the March 10, 2020, Declaration to clarify that covered countermeasures under the Declaration include qualified products that limit the harm COVID–19 might otherwise cause. 42 U.S.C. 247d–6d(i)(7)(A)(i)(II). This amendment is made in accordance with section 319F–3(b)(4) of the PHS Act, which authorizes the Secretary to amend a PREP Act Declaration at any time.

Description of This Amendment by Section

Section VI. Covered Countermeasures

Section VI of the Declaration identifies the Covered Countermeasures for which the Secretary has recommended activities under section III of the Declaration. The PREP Act, as amended, states that a ''Covered Countermeasure'' must be a ''qualified pandemic or epidemic product,'' a ''security countermeasure,'' a drug, biological product, or device authorized for emergency use in accordance with sections 564, 564A, or 564B of the Federal Food, Drug, and Cosmetic (FD&C) Act, or a respiratory protective device approved by NIOSH under 42 CFR part 84, or any successor regulations, that the Secretary determines to be a priority for use during a public health emergency declared under section 319 of the PHS Act.

As described in section VI of the preamble to the March 10, 2020 Declaration, the PREP Act further defines a ''qualified pandemic or epidemic product'' to mean a drug or device, as defined in the FD&C Act or a biological product, as defined in the PHS Act that is (i) manufactured, used, designed, developed, modified, licensed or procured to diagnose, mitigate, prevent, treat, or cure a pandemic or epidemic or limit the harm such a pandemic or epidemic might otherwise cause; (ii) manufactured, used, designed, developed, modified, licensed, or procured to diagnose, mitigate, prevent, treat, or cure a serious or life-threatening disease or condition caused by such a drug, biological product, or device; or (iii) a product or technology intended to enhance the use or effect of such a drug, biological product, or device. A qualified pandemic or epidemic product must also be approved, cleared, licensed, or authorized for investigational or emergency use under the FD&C Act or PHS Act. The Coronavirus Aid, Relief, and Economic Security (CARES) Act section 3103, Public Law 116–136 (Mar. 27, 2020), amended the PREP Act to add respiratory protective devices to the list of covered countermeasures so long as they are NIOSH approved and determined by the Secretary to be a priority for use during a public health emergency declared by the Secretary under section 319 of the Public Health Service Act. 85 FR 21012 (Apr. 15, 2020) (amending the Declaration effective March 27, 2020 to address this statutory change).

The Secretary intended section VI of the March 10, 2020 Declaration to include all qualified pandemic and epidemic products defined under the PREP Act and described in the preamble to the Declaration. But section VI of the March 10, 2020 Declaration identified Covered Countermeasures under the Declaration as ''any antiviral, any other drug, any biologic, any diagnostic, any other device, or any vaccine, used to treat, diagnose, cure, prevent, or mitigate COVID–19, or the transmission of SARS–CoV–2 or a virus mutating therefrom, or any device used in the administration of any such product, and all components and constituent materials of any such product.'' 85 FR 15202. That description omitted the phrase from the statutory definition that qualified pandemic and epidemic products may also include products that ''limit the harm such a pandemic or epidemic might otherwise cause.'' The Secretary intended to identify the full range of qualified countermeasures in the March 10, 2020 Declaration. The Secretary accordingly amends section VI of the Declaration to clarify that intent.

Qualified pandemic and epidemic products that limit the harm that COVID–19 might otherwise cause are those that would not have been manufactured, administered, used, designed, developed, modified, licensed, or procured but for the COVID–19 pandemic, even when the products are manufactured, administered, used, designed, developed, modified, licensed, or procured to diagnose, mitigate, prevent, treat, or cure health threats or conditions other than COVID–19. For example, the COVID–19 pandemic has resulted in shortages of certain drugs and devices that the FDA has authorized. These drugs and devices may be used for COVID–19 and other health conditions. Those shortages are ''harm[s] [COVID–19] might otherwise cause.'' Filling those shortages caused by COVID–19 reduces the strain on the American healthcare system by mitigating the escalation of adverse

health conditions from COVID–19 and non-COVID–19 causes. And mitigating that escalation conserves limited healthcare resources—from personal protective equipment to healthcare providers—which are essential in the whole-of-Nation response to the COVID–19 pandemic.

Amendments to Declaration

Amended Declaration for Public Readiness and Emergency Preparedness Act Coverage for medical countermeasures against COVID–19.

Section VI of the March 10, 2020, Declaration under the PREP Act for medical countermeasures against COVID–19, as amended April 10, 2020, is further amended pursuant to section 319F–3(b)(4) of the PHS Act, as described below. All other sections of the Declaration remain in effect as published at 85 FR 15198 (Mar. 17, 2020) and amended at 85 FR 21012 (Apr. 15, 2020).

Covered Countermeasures, section VI, delete in full and replace with:

VI. Covered Countermeasures

42 U.S.C. 247d–6b(c)(1)(B), 42 U.S.C. 247d–6d(i)(1) and (7)

Covered Countermeasures are

(1) any antiviral, any other drug, any biologic, any diagnostic, any other device, any respiratory protective device, or any vaccine, used

a. to treat, diagnose, cure, prevent, mitigate or limit the harm from COVID–19, or the transmission of SARS–CoV–2 or a virus mutating therefrom, or

b. to limit the harm that COVID–19, or the transmission of SARS–CoV–2 or a virus mutating therefrom, might otherwise cause; or

(2) any device used in the administration of any such product, and all components and constituent materials of any such product.

Covered Countermeasures must be ''qualified pandemic or epidemic products,'' or ''security countermeasures,'' or drugs, biological products, or devices authorized for investigational or emergency use, as those terms are defined in the PREP Act, the FD&C Act, and the Public Health Service Act, or a respiratory protective device approved by NIOSH under 42 CFR part 84, or any successor regulations, that the Secretary determines to be a priority for use during a public health emergency declared under section 319 of the PHS Act.

Authority: 42 U.S.C. 247d–6d.

Dated: June 4, 2020.

Alex M. Azar II,

Secretary of Health and Human Services.

[FR Doc. 2020–12465 Filed 6–4–20; 4:15 pm]

BILLING CODE 4150–28–P

DEPARTMENT OF HEALTH AND HUMAN SERVICES

National Institutes of Health

National Institute on Minority Health and Health Disparities; Notice of Closed Meeting

Pursuant to section 10(d) of the Federal Advisory Committee Act, as amended, notice is hereby given of the following meeting.

The meeting will be closed to the public in accordance with the provisions set forth in sections 552b(c)(4) and 552b(c)(6), Title 5 U.S.C., as amended. The grant applications and the discussions could disclose confidential trade secrets or commercial property such as patentable material, and personal information concerning individuals associated with the grant applications, the disclosure of which would constitute a clearly unwarranted invasion of personal privacy.

Name of Committee: National Institute on Minority Health and Health Disparities Special Emphasis Panel; Addressing Racial Disparities in Maternal Mortality and Morbidity (R01 Clinical Trial Optional).

Date: July 29–30, 2020.

Time: 10:00 a.m. to 6:00 p.m.

Agenda: To review and evaluate grant applications.

Place: National Institutes of Health, Gateway Plaza, 7201 Wisconsin Avenue, Bethesda, MD 20817 (Virtual Meeting).

Contact Person: Deborah Ismond, Ph.D., Scientific Review Officer, Division of Scientific Programs, NIMHD, National Institutes of Health, Gateway Building, 7201 Wisconsin Avenue, Bethesda, MD 20892, (301) 402–1366, *ismonddr@mail.nih.gov.*

Dated: June 2, 2020.

Miguelina Perez,

Program Analyst, Office of Federal Advisory Committee Policy.

[FR Doc. 2020–12335 Filed 6–5–20; 8:45 am]

BILLING CODE 4140–01–P

DEPARTMENT OF HEALTH AND HUMAN SERVICES

National Institutes of Health

National Institute of Allergy and Infectious Diseases; Notice of Closed Meeting

Pursuant to section 10(d) of the Federal Advisory Committee Act, as amended, notice is hereby given of the following meeting.

The meeting will be closed to the public in accordance with the provisions set forth in sections 552b(c)(4) and 552b(c)(6), Title 5 U.S.C., as amended. The grant applications and the discussions could disclose confidential trade secrets or commercial property such as patentable material, and personal information concerning individuals associated with the grant applications, the disclosure of which would constitute a clearly unwarranted invasion of personal privacy.

Name of Committee: National Institute of Allergy and Infectious Diseases Special Emphasis Panel, NIAID Resource Related Research Projects (R24 Clinical Trial Not Allowed).

Date: June 30, 2020.

Time: 3:00 p.m. to 6:00 p.m.

Agenda: To review and evaluate grant applications.

Place: National Institute of Allergy and Infectious Diseases, National Institutes of Health, 5601 Fishers Lane, Room 3G49, Rockville, MD 20892 (Virtual Meeting).

Contact Person: Tara Capece, Ph.D., Scientific Review Officer, Scientific Review Program, Division of Extramural Activities, National Institutes of Health, 5601 Fishers Lane, Room 3G49, Rockville, MD 20852, 240–191–4281, *capecet2@niaid.nih.gov.*

(Catalogue of Federal Domestic Assistance Program Nos. 93.855, Allergy, Immunology, and Transplantation Research; 93.856, Microbiology and Infectious Diseases Research, National Institutes of Health, HHS)

Dated: June 2, 2020.

Tyeshia M. Roberson,

Program Analyst, Office of Federal Advisory Committee Policy.

[FR Doc. 2020–12332 Filed 6–5–20; 8:45 am]

BILLING CODE 4140–01–P

DEPARTMENT OF HEALTH AND HUMAN SERVICES

National Institutes of Health

National Institute of General Medical Sciences; Notice of Closed Meeting

Pursuant to section 10(d) of the Federal Advisory Committee Act, as amended, notice is hereby given of the following meeting.

The meeting will be closed to the public in accordance with the provisions set forth in sections 552b(c)(4) and 552b(c)(6), Title 5 U.S.C., as amended. The grant applications and the discussions could disclose confidential trade secrets or commercial property such as patentable material, and personal information concerning individuals associated with the grant applications, the disclosure of which

would constitute a clearly unwarranted invasion of personal privacy.

Name of Committee: NIGMS Initial Review Group; Training and Workforce Development Subcommittee—D.

Date: June 18, 2020.

Time: 9:30 a.m. to 6:30 p.m.

Agenda: To review and evaluate grant applications.

Place: National Institutes of Health, Natcher Building, 45 Center Drive, Bethesda, MD 20892 (Video Meeting).

Contact Person: Tracy Koretsky, Ph.D., Scientific Review Officer, Office of Scientific Review, National Institute of General Medical Sciences, National Institutes of Health, 45 Center Drive, MSC 6200, Room 3AN.12F, Bethesda, MD 20892, (301) 594–2886, *tracy.koretsky@nih.gov*.

(Catalogue of Federal Domestic Assistance Program Nos. 93.375, Minority Biomedical Research Support; 93.821, Cell Biology and Biophysics Research; 93.859, Pharmacology, Physiology, and Biological Chemistry Research; 93.862, Genetics and Developmental Biology Research; 93.88, Minority Access to Research Careers; 93.96, Special Minority Initiatives; 93.859, Biomedical Research and Research Training, National Institutes of Health, HHS)

Dated: June 2, 2020.

Miguelina Perez,

Program Analyst, Office of Federal Advisory Committee Policy.

[FR Doc. 2020–12334 Filed 6–5–20; 8:45 am]

BILLING CODE 4140–01–P

DEPARTMENT OF HEALTH AND HUMAN SERVICES

National Institutes of Health

National Institute of Allergy and Infectious Diseases; Notice of Closed Meeting

Pursuant to section 10(d) of the Federal Advisory Committee Act, as amended, notice is hereby given of the following meeting.

The meeting will be closed to the public in accordance with the provisions set forth in sections 552b(c)(4) and 552b(c)(6), Title 5 U.S.C., as amended. The grant applications and the discussions could disclose confidential trade secrets or commercial property such as patentable material, and personal information concerning individuals associated with the grant applications, the disclosure of which would constitute a clearly unwarranted invasion of personal privacy.

Name of Committee: National Institute of Allergy and Infectious Diseases Special Emphasis Panel; NIAID Clinical Trial Implementation Cooperative Agreement (U01).

Date: June 29, 2020.

Time: 11:00 a.m. to 2:00 p.m.

Agenda: To review and evaluate grant applications.

Place: National Institute of Allergy and Infectious Diseases, National Institutes of Health, 5601 Fishers Lane, Room 3G49, Rockville, MD 20892 (Virtual Meeting).

Contact Person: Tara Capece, Ph.D., Scientific Review Officer, Scientific Review Program, Division of Extramural Activities, National Institutes of Health, National Institute of Allergy and Infectious Diseases, 5601 Fishers Lane, Room 3G49, Rockville, MD 20852, 240–191–4281, *capecet2@niaid.nih.gov*.

(Catalogue of Federal Domestic Assistance Program Nos. 93.855, Allergy, Immunology, and Transplantation Research; 93.856, Microbiology and Infectious Diseases Research, National Institutes of Health, HHS)

Dated: June 2, 2020.

Tyeshia M. Roberson,

Program Analyst, Office of Federal Advisory Committee Policy.

[FR Doc. 2020–12331 Filed 6–5–20; 8:45 am]

BILLING CODE 4140–01–P

DEPARTMENT OF HEALTH AND HUMAN SERVICES

National Institutes of Health

Center for Scientific Review; Notice of Closed Meetings

Pursuant to section 10(d) of the Federal Advisory Committee Act, as amended, notice is hereby given of the following meetings.

The meetings will be closed to the public in accordance with the provisions set forth in sections 552b(c)(4) and 552b(c)(6), Title 5 U.S.C., as amended. The grant applications and the discussions could disclose confidential trade secrets or commercial property such as patentable material, and personal information concerning individuals associated with the grant applications, the disclosure of which would constitute a clearly unwarranted invasion of personal privacy.

Name of Committee: Center for Scientific Review Special Emphasis Panel; PAR–DK–19–019: AIDS and AIDS-Related Research.

Date: June 25, 2020.

Time: 11:00 a.m. to 5:00 p.m.

Agenda: To review and evaluate grant applications.

Place: National Institutes of Health, Rockledge II, 6701 Rockledge Drive, Bethesda, MD 20892 (Virtual Meeting).

Contact Person: Mark P. Rubert, Ph.D., Scientific Review Officer, Center for Scientific Review, National Institutes of Health, 6701 Rockledge Drive, Room 5218, MSC 7852, Bethesda, MD 20892, (301) 435–1775, *rubertm@csr.nih.gov*.

Name of Committee: Center for Scientific Review Special Emphasis Panel; Small Business: Clinical Neurophysiology, Devices, Neuroprosthetics, and Biosensors.

Date: July 7–8, 2020.

Time: 8:30 a.m. to 5:00 p.m.

Agenda: To review and evaluate grant applications.

Place: National Institutes of Health, Rockledge II, 6701 Rockledge Drive, Bethesda, MD 20892 (Virtual Meeting).

Contact Person: Cristina Backman, Ph.D., Scientific Review Officer, ETTN IRG, Center for Scientific Review, National Institutes of Health, 6701 Rockledge Drive, Room 5211, MSC 7846, Bethesda, MD 20892, (301) 480–9069, *cbackman@mail.nih.gov*.

Name of Committee: Center for Scientific Review Special Emphasis Panel; Small Business: Disease Prevention and Management, Risk Reduction and Health Behavior Change.

Date: July 7–8, 2020.

Time: 9:00 a.m. to 7:00 p.m.

Agenda: To review and evaluate grant applications.

Place: National Institutes of Health, Rockledge II, 6701 Rockledge Drive, Bethesda, MD 20892 (Virtual Meeting).

Contact Person: Michael J. McQuestion, Ph.D., Scientific Review Officer, Center for Scientific Review, National Institutes of Health, 6701 Rockledge Drive, Room 3114, Bethesda, MD 20892, (301) 480–1276, *mike.mcquestion@nih.gov*.

Name of Committee: Center for Scientific Review Special Emphasis Panel; PAR– 20–085: Pilot Centers for Precision Disease Modeling (U54).

Date: July 7, 2020.

Time: 9:00 a.m. to 6:00 p.m.

Agenda: To review and evaluate grant applications.

Place: National Institutes of Health, Rockledge II, 6701 Rockledge Drive, Bethesda, MD 20892 (Virtual Meeting).

Contact Person: Raj K. Krishnaraju, Ph.D., Scientific Review Officer, Center for Scientific Review, National Institutes of Health, 6701 Rockledge Drive, Room 6190, Bethesda, MD 20892, (301) 435–1047, *kkrishna@csr.nih.gov*.

Name of Committee: Center for Scientific Review Special Emphasis Panel; Member Conflict: Mitochondria and Neurodegeneration SEP.

Date: July 7, 2020.

Time: 1:00 p.m. to 4:00 p.m.

Agenda: To review and evaluate grant applications.

Place: National Institutes of Health, Rockledge II, 6701 Rockledge Drive, Bethesda, MD 20892 (Virtual Meeting).

Contact Person: Geoffrey G. Schofield, Ph.D., Scientific Review Officer, Center for Scientific Review, National Institutes of Health, 6701 Rockledge Drive, Room 4040–A, MSC 7850, Bethesda, MD 20892, (301) 435–1235, *geoffreys@csr.nih.gov*.

(Catalogue of Federal Domestic Assistance Program Nos. 93.306, Comparative Medicine; 93.333, Clinical Research, 93.306, 93.333, 93.337, 93.393–93.396, 93.837–93.844, 93.846–93.878, 93.892, 93.893, National Institutes of Health, HHS)

Dated: June 2, 2020.

Miguelina Perez,

Program Analyst, Office of Federal Advisory Committee Policy.

[FR Doc. 2020–12329 Filed 6–5–20; 8:45 am]

BILLING CODE 4140–01–P

DEPARTMENT OF HEALTH AND HUMAN SERVICES

National Institutes of Health

National Institute of Mental Health; Amended Notice of Meeting

Notice is hereby given of a change in the meeting of the National Institute of Mental Health Special Emphasis Panel, June 30, 2020, 11:00 a.m. to June 30, 2020, 4:00 p.m., National Institutes of Health, Neuroscience Center, 6001 Executive Blvd., Rockville, MD 20852 which was published in the **Federal Register** on June 2, 2020, 85 FR 33694.

This notice is to amend the title of the meeting from ''Early Phase Clinical Trials—Pharmacological and Device-based Interventions,'' to ''Early Phase Clinical Trials for Psychosocial Interventions.'' The meeting is closed to the public.

Dated: June 2, 2020.

Melanie J. Pantoja,

Program Analyst, Office of Federal Advisory Committee Policy.

[FR Doc. 2020–12258 Filed 6–5–20; 8:45 am]

BILLING CODE 4140–01–P

DEPARTMENT OF HEALTH AND HUMAN SERVICES

National Institutes of Health

Center for Scientific Review; Notice of Closed Meetings

Pursuant to section 10(d) of the Federal Advisory Committee Act, as amended, notice is hereby given of the following meetings.

The meetings will be closed to the public in accordance with the provisions set forth in sections 552b(c)(4) and 552b(c)(6), Title 5 U.S.C., as amended. The grant applications and the discussions could disclose confidential trade secrets or commercial property such as patentable material, and personal information concerning individuals associated with the grant applications, the disclosure of which would constitute a clearly unwarranted invasion of personal privacy.

Name of Committee: Center for Scientific Review Special Emphasis Panel; Exploration of Antimicrobial Therapeutics and Resistance.

Date: July 8–9, 2020.

Time: 8:30 a.m. to 5:00 p.m.

Agenda: To review and evaluate grant applications.

Place: National Institutes of Health, Rockledge II, 6701 Rockledge Drive, Bethesda, MD 20892 (Virtual Meeting).

Contact Person: Susan Daum, Ph.D., Scientific Review Officer, Center for Scientific Review, National Institutes of Health, 6701 Rockledge Drive, Room 3202, Bethesda, MD 20892, (301) 827–7233, *susan.boyle-vavra@nih.gov.*

Name of Committee: Center for Scientific Review Special Emphasis Panel; Small Business: Biomaterials, Delivery, and Nanotechnology.

Date: July 8–9, 2020.

Time: 8:30 a.m. to 6:00 p.m.

Agenda: To review and evaluate grant applications.

Place: National Institutes of Health, Rockledge II, 6701 Rockledge Drive, Bethesda, MD 20892 (Virtual Meeting).

Contact Person: Nitsa Rosenzweig, Ph.D., Scientific Review Officer, Center for Scientific Review, National Institutes of Health, 6701 Rockledge Drive, Room 4152, MSC 7760, Bethesda, MD 20892, (301) 404–7419, *rosenzweign@csr.nih.gov.*

Name of Committee: Center for Scientific Review, Special Emphasis Panel; SBIR Small Business: Computational, Modeling, and Biodata Management.

Date: July 8–9, 2020.

Time: 9:00 a.m. to 6:00 p.m.

Agenda: To review and evaluate grant applications.

Place: National Institutes of Health, Rockledge II, 6701 Rockledge Drive, Bethesda, MD 20892 (Virtual Meeting).

Contact Person: Allen Richon, Ph.D., Scientific Review Officer, Center for Scientific Review, National Institutes of Health, 6701 Rockledge Drive, Room 6184, MSC 7892, Bethesda, MD 20892, (301) 379–9351, *allen.richon@nih.hhs.gov.*

Name of Committee: Center for Scientific Review Special Emphasis Panel; Member Conflict: Eukaryotic Parasites and Vectors.

Date: July 8–9, 2020.

Time: 10:00 a.m. to 6:00 p.m.

Agenda: To review and evaluate grant applications.

Place: National Institutes of Health, Rockledge II, 6701 Rockledge Drive, Bethesda, MD 20892 (Virtual Meeting).

Contact Person: Fouad A. El-Zaatari, Ph.D., Scientific Review Officer, Center for Scientific Review, National Institutes of Health, 6701 Rockledge Drive, Room 3186, MSC 7808, Bethesda, MD 20892, (301) 435–1149, *elzaataf@csr.nih.gov.*

Name of Committee: Center for Scientific Review Special Emphasis Panel; Member Conflict: Glial Biology and Neurodegeneration SEP.

Date: July 8, 2020.

Time: 1:00 p.m. to 4:00 p.m.

Agenda: To review and evaluate grant applications.

Place: National Institutes of Health, Rockledge II, 6701 Rockledge Drive, Bethesda, MD 20892 (Virtual Meeting).

Contact Person: Geoffrey G. Schofield, Ph.D., Scientific Review Officer, Center for Scientific Review, National Institutes of Health, 6701 Rockledge Drive, Room 4040–A, MSC 7850, Bethesda, MD 20892, (301) 435–1235, *geoffreys@csr.nih.gov.*

(Catalogue of Federal Domestic Assistance Program Nos. 93.306, Comparative Medicine; 93.333, Clinical Research, 93.306, 93.333, 93.337, 93.393–93.396, 93.837–93.844, 93.846–93.878, 93.892, 93.893, National Institutes of Health, HHS)

Dated: June 2, 2020.

Miguelina Perez,

Program Analyst, Office of Federal Advisory Committee Policy.

[FR Doc. 2020–12330 Filed 6–5–20; 8:45 am]

BILLING CODE 4140–01–P

DEPARTMENT OF HEALTH AND HUMAN SERVICES

National Institutes of Health

National Institute of Diabetes and Digestive and Kidney Diseases; Notice of Closed Meeting

Pursuant to section 10(d) of the Federal Advisory Committee Act, as amended, notice is hereby given of the following meeting.

The meeting will be closed to the public in accordance with the provisions set forth in sections 552b(c)(4) and 552b(c)(6), Title 5 U.S.C., as amended. The grant applications and the discussions could disclose confidential trade secrets or commercial property such as patentable material, and personal information concerning individuals associated with the grant applications, the disclosure of which would constitute a clearly unwarranted invasion of personal privacy.

Name of Committee: National Institute of Diabetes and Digestive and Kidney Diseases Special Emphasis Panel; Planning Grant on Liver Transplantation.

Date: June 29, 2020.

Time: 4:00 p.m. to 6:00 p.m.

Agenda: To review and evaluate grant applications.

Place: National Institutes of Health, Two Democracy Plaza, 6707 Democracy Boulevard, Bethesda, MD 20892 (Telephone Conference Call).

Contact Person: Maria E. Davila-Bloom, Ph.D., Scientific Review Officer, Review Branch, Division of Extramural Activities, NIDDK, National Institutes of Health, Room 7017, 6707 Democracy Boulevard, Bethesda, MD 20892–5452, (301) 594–7637, *davila-bloomm@extra.niddk.nih.gov.*

(Catalogue of Federal Domestic Assistance Program Nos. 93.847, Diabetes, Endocrinology and Metabolic Research; 93.848, Digestive Diseases and Nutrition Research; 93.849, Kidney Diseases, Urology and Hematology Research, National Institutes of Health, HHS)

Dated: June 2, 2020.

Miguelina Perez,

Program Analyst, Office of Federal Advisory Committee Policy.

[FR Doc. 2020–12333 Filed 6–5–20; 8:45 am]

BILLING CODE 4140–01–P

DEPARTMENT OF THE INTERIOR

Fish and Wildlife Service

[FWS–R3–ES–2020–N082; FXES11130300000–201–FF03E00000]

Endangered and Threatened Species; Receipt of Recovery Permit Applications

AGENCY: Fish and Wildlife Service, Interior.

ACTION: Notice of receipt of permit applications; request for comments.

SUMMARY: We, the U.S. Fish and Wildlife Service, have received applications for permits to conduct activities intended to enhance the propagation or survival of endangered or threatened species under the Endangered Species Act. We invite the public and local, State, Tribal, and Federal agencies to comment on these applications. Before issuing any of the requested permits, we will take into consideration any information that we receive during the public comment period.

DATES: We must receive your written comments on or before July 8, 2020.

ADDRESSES: *Document availability and comment submission:* Submit requests for copies of the applications and related documents, as well as any comments, by one of the following methods. All requests and comments should specify the applicant name(s) and application number(s) (*e.g.,* TEXXXXXX; see table in **SUPPLEMENTARY INFORMATION**):

- *Email: permitsR3ES@fws.gov.* Please refer to the respective application number (*e.g.,* Application No. TEXXXXXX) in the subject line of your email message.
- *U.S. Mail:* Regional Director, Attn: Nathan Rathbun, U.S. Fish and Wildlife Service, Ecological Services, 5600 American Blvd. West, Suite 990, Bloomington, MN 55437–1458.

FOR FURTHER INFORMATION CONTACT: Nathan Rathbun, 612–713–5343 (phone); *permitsR3ES@fws.gov* (email). Individuals who are hearing or speech impaired may call the Federal Relay Service at 1–800–877–8339 for TTY assistance.

SUPPLEMENTARY INFORMATION:

Background

The Endangered Species Act of 1973, as amended (ESA; 16 U.S.C. 1531 *et seq.*), prohibits certain activities with endangered and threatened species unless authorized by a Federal permit. The ESA and our implementing regulations in part 17 of title 50 of the Code of Federal Regulations (CFR) provide for the issuance of such permits and require that we invite public comment before issuing permits for activities involving endangered species.

A recovery permit issued by us under section 10(a)(1)(A) of the ESA authorizes the permittee to conduct activities with endangered species for scientific purposes that promote recovery or for enhancement of propagation or survival of the species. Our regulations implementing section 10(a)(1)(A) for these permits are found at 50 CFR 17.22 for endangered wildlife species, 50 CFR 17.32 for threatened wildlife species, 50 CFR 17.62 for endangered plant species, and 50 CFR 17.72 for threatened plant species.

Permit Applications Available for Review and Comment

We invite local, State, and Federal agencies; Tribes; and the public to comment on the following applications:

Application No.	Applicant	Species	Location	Activity	Type of take	Permit action
TE73584A	Illinois Natural History Survey, Champaign, IL.	Add Neosho madtom (*Noturus placidus*) to existing permitted species: 15 freshwater mussel species.	Add new locations—KS, MO, OK—to existing authorized location IL.	Conduct presence/absence surveys, document habitat use, conduct population monitoring, evaluate impacts.	Capture, handle, temporary hold, DNA sample, fin clip, release, kill, salvage.	Amend.
TE76362D	Minnesota Zoological Garden, Apple Valley, MN.	Higgins' eye (pearlymussel) (*Lampsilis higginsii*), sheepnose mussel (*Plethobasus cyphyus*), snuffbox mussel (*Epioblasma triquetra*), spectaclecase (mussel) (*Cumberlandia monodonta*), winged mapleleaf (*Quadrula fragosa*).	IL, IA, MN, WI	Conduct presence/absence surveys, document habitat use, conduct population monitoring, evaluate impacts, conduct rearing methods research.	Collect, handle, transport, mark, temporary hold, collect tissue and buccal swab samples, captive propagate, headstart juveniles, release, augment, reintroduce.	New.
TE31055B	Kory Armstrong, Atlanta, GA	Gray bat (*Myotis grisescens*), Indiana bat (*M. sodalis*), northern long-eared bat (*M. septentrionalis*), Ozark big-eared bat (*Corynorhinus towsendii ingens*), Virginia big-eared bat (*C.t. virginianus*).	AL, AR, CT, DE, DC, GA, IL, IN, IA, KS, KY, LA, ME, MD, MA, MI, MN, MS, MO, MT, NE, NH, NJ, NY, NC, ND, OH, OK, PA, RI, SC, SD, TN, VT, VA, WV, WI, WY.	Conduct presence/absence surveys, document habitat use, conduct population monitoring, evaluate impacts.	Capture, handle, mist-net, harp trap, band, radio-tag, release.	Renew.

Public Availability of Comments

Written comments we receive become part of the administrative record associated with this action. Before including your address, phone number, email address, or other personal identifying information in your comment, you should be aware that your entire comment—including your personal identifying information—may be made publicly available at any time. While you can request in your comment that we withhold your personal identifying information from public

review, we cannot guarantee that we will be able to do so. Moreover, all submissions from organizations or businesses, and from individuals identifying themselves as representatives or officials of organizations or businesses, will be made available for public disclosure in their entirety.

Next Steps

If we decide to issue permits to any of the applicants listed in this notice, we will publish a notice in the **Federal Register**.

Authority

We publish this notice under section 10(c) of the Endangered Species Act of 1973, as amended (16 U.S.C. 1531 *et seq.*).

Lori Nordstrom,

Assistant Regional Director, Ecological Services.

[FR Doc. 2020–12321 Filed 6–5–20; 8:45 am]

BILLING CODE 4333–15–P

DEPARTMENT OF THE INTERIOR

Bureau of Land Management

[20XL1109AF LLNMA01000 L12200000.PM0000 241A]

Call for Nominations for the Rio Puerco Management Committee, New Mexico

AGENCY: Bureau of Land Management, Interior.

ACTION: Notice.

SUMMARY: The purpose of this notice is to request public nominations for members to the Bureau of Land Management's (BLM) Rio Puerco Management Committee (Committee).

DATES: A completed nomination form and accompanying nomination/recommendation letters must be received by July 8, 2020.

ADDRESSES: Send nominations to Mark Matthews, BLM acting Albuquerque District Manager, 100 Sun Blvd. NE, Suite 330, Albuquerque, NM 87109, Attention: Rio Puerco Management Committee Nominations.

FOR FURTHER INFORMATION CONTACT: Contact Allison Sandoval, Public Affairs Specialist, BLM New Mexico State Office, 301 Dinosaur Trail, Santa Fe, NM 87508, phone (505) 954–2019, or email *aesandoval@blm.gov.* Persons who use a telecommunications device for the deaf (TDD) may call the Federal Relay Service (FRS) at 1–800–877–8229, to contact the above individual during normal business hours. The FRS is available 24 hours a day, 7 days a week, to leave a message or question with the above individual. You will receive a reply during normal business hours.

SUPPLEMENTARY INFORMATION: Omnibus Parks and Public Lands Management Act, Section 401, reauthorized through the John D. Dingell, Jr. Conservation, Management, and Recreation Act, Section 1122, directs the Secretary of the Interior (Secretary) to establish the Committee. The Committee is regulated by the Federal Advisory Committee Act (5 U.S.C. Appendix 2) and section 309 of the Federal Land Policy and Management Act (FLPMA). The BLM rules governing advisory committees are found at 43 CFR subpart 1784.

The Committee shall advise the Secretary, acting through the Director of the Bureau of Land Management, on the development and implementation of the Rio Puerco Management Program and serve as a forum for information about activities that may affect or further the development and implementation of the best management practices. The Committee shall be convened by a representative of the Bureau of Land Management and shall include representatives from:

(1) The Rio Puerco Watershed Committee;

(2) affected tribes and pueblos;

(3) the United States Forest Service of the Department of Agriculture;

(4) the Bureau of Reclamation;

(5) the United States Geological Survey;

(6) the Bureau of Indian Affairs;

(7) the United States Fish and Wildlife Service;

(8) the Army Corps of Engineers;

(9) the Environmental Protection Agency;

(10) the Natural Resources Conservation Service of the Department of Agriculture;

(11) the State of New Mexico, including the New Mexico Environment Department of the State Engineer;

(12) affected local soil and water conservation districts;

(13) the Elephant Butte Irrigation District;

(14) private landowners; and

(15) other interested citizens.

Members will be appointed by the Secretary to staggered 3-year terms.

Nominating Potential Members: Nomination forms may be obtained from the Rio Puerco Field Office, (address listed above) or *https://www.blm.gov/get-involved/resource-advisory-council/near-you/New-Mexico.* All nominations must include a completed Resource Advisory Council application (OMB Control No. 1004–0204), letters of reference from the represented interests or organizations, and any other information that speaks to the candidate's qualifications. The specific category the nominee would be representing should be identified in the letter of nomination and on the application form.

Non-Federal members of the Committee serve without compensation. However, while away from their homes or regular places of business, Committee and subcommittee members engaged in Committee or subcommittee business may be allowed travel expenses, including per diem in lieu of subsistence, as authorized by 5 U.S.C. 5703, in the same manner as persons employed intermittently in Federal Government service. The Committee shall meet approximately two to four times annually, and at such other times as determined by the Designated Federal Officer.

Certification Statement: I hereby certify that the Rio Puerco Management Committee is necessary and is in the public interest in connection with the performance of duties pursuant to the Department of the Interior's authority under the Omnibus Parks and Public Lands Management Act, the Omnibus Public Land Management Act of 2009, and the John D. Dingell, Jr. Conservation, Management, and Recreation Act.

Authority: 43 CFR 1784.4–1.

Mark Matthews,

Acting Albuquerque District Manager.

[FR Doc. 2020–12353 Filed 6–5–20; 8:45 am]

BILLING CODE 4310–FB–P

DEPARTMENT OF THE INTERIOR

National Park Service

[NPS–WASO–NRNHL–DTS#–30378; PPWOCRADI0, PCU00RP14.R50000]

National Register of Historic Places; Notification of Pending Nominations and Related Actions

AGENCY: National Park Service, Interior.

ACTION: Notice.

SUMMARY: The National Park Service is soliciting electronic comments on the significance of properties nominated before May 23, 2020, for listing or related actions in the National Register of Historic Places.

DATES: Comments should be submitted electronically by June 23, 2020.

ADDRESSES: Comments are encouraged to be submitted electronically to *National_Register_Submissions @nps.gov* with the subject line ''Public

Comment on <property or proposed district name, (County) State>.'' If you have no access to email you may send them via U.S. Postal Service and all other carriers to the National Register of Historic Places, National Park Service, 1849 C Street NW, MS 7228, Washington, DC 20240.

SUPPLEMENTARY INFORMATION:

The properties listed in this notice are being considered for listing or related actions in the National Register of Historic Places. Nominations for their consideration were received by the National Park Service before May 23, 2020. Pursuant to Section 60.13 of 36 CFR part 60, comments are being accepted concerning the significance of the nominated properties under the National Register criteria for evaluation.

Before including your address, phone number, email address, or other personal identifying information in your comment, you should be aware that your entire comment—including your personal identifying information—may be made publicly available at any time. While you can ask us in your comment to withhold your personal identifying information from public review, we cannot guarantee that we will be able to do so.

Nominations submitted by State or Tribal Historic Preservation Officers:

DISTRICT OF COLUMBIA

District of Columbia

Slowe-Burrill House, 1256 Kearny St. NE, Washington, SG100005324

KENTUCKY

Caldwell County

State Road-Hill Cemetery Segment, (Cherokee Trail of Tears MPS (Additional Documentation)), Adjacent to Hill Cemetery at the end of Hill Cemetery Rd., Fredonia vicinity, MP100005312

OHIO

Lake County

Downtown Painesville Historic District, Veterans Park, 22 Liberty St., 7 Richmond St., 7–71 North Park Pl., 30–100 South, Park Pl., 15–34 South Saint Clair St., 105–270 Main St., excluding 177 Main St., 8–124 North State St., 1–83 South State St., excluding 54 South State St., Painesville, SG100005323

OREGON

Clackamas County

Buena Vista Social Clubhouse, 1601 Jackson St., Oregon City, SG100005321

Deschutes County

Sphier, D.H., Building, 901 NW Bond St., Bend, SG100005322

SOUTH DAKOTA

Beadle County

Habicht & Habicht Department Store, 274 Dakota Ave. South, Huron, SG100005318

Edmunds County

Ipswich Masonic Temple, 318 2nd Ave., Ipswich, SG100005320

TEXAS

Harris County

Sears, Roebuck and Company Warehouse and Service Center, 5901 Griggs Rd., Houston, SG100005314

WEST VIRGINIA

Mercer County

Princeton Post Office, 920 Mercer St., Princeton, SG100005316

Tucker County

National Bank of Davis, 417 William Ave., Davis, SG100005315

Additional documentation has been received for the following resources:

KENTUCKY

Jefferson County

Chestnut Street Baptist Church (Additional Documentation), 912 West Chestnut St., Louisville, AD80001598

WEST VIRGINIA

Ohio County

Wheeling Historic District (Additional Documentation), Roughly bounded by 10th, Eoff, 17th, and Water Sts., Wheeling, AD79002597

Nomination submitted by Federal Preservation Officer:

The State Historic Preservation Officer reviewed the following nomination and responded to the Federal Preservation Officer within 45 days of receipt of the nomination and supports listing the property in the National Register of Historic Places.

MASSACHUSETTS

Norfolk County

John Fitzgerald Kennedy National Historic Site (Additional Documentation), 83 Beals St., Brookline, AD67000001

Authority: Section 60.13 of 36 CFR part 60.

Dated: May 26, 2020.

Sherry A. Frear,

Chief, National Register of Historic Places/National Historic Landmarks Program.

[FR Doc. 2020–12360 Filed 6–5–20; 8:45 am]

BILLING CODE 4312–52–P

DEPARTMENT OF THE INTERIOR

National Park Service

[NPS–NER–ACAD–30171; PPNEACADSO, PPMPSPDIZ.YM0000]

Acadia National Park Advisory Commission Notice of Public Meetings

AGENCY: National Park Service, Interior.

ACTION: Meeting notice.

SUMMARY: In accordance with the Federal Advisory Committee Act of 1972, the National Park Service (NPS) is hereby giving notice that the Acadia National Park Advisory Commission (Commission) will meet as indicated below.

DATES: The Commission will meet: Monday, September 14, 2020; and Monday, February 1, 2021. All scheduled meetings will begin at 1:00 p.m. and will end by 4:00 p.m. (Eastern).

ADDRESSES: The September 14, 2020, meeting will be held at the Schoodic Institute, Moore Auditorium, Winter Harbor, Maine 04693, and the February 1, 2021, meeting will be held at the headquarters conference room, Acadia National Park, 20 McFarland Hill Drive, Bar Harbor, Maine 04609.

FOR FURTHER INFORMATION CONTACT: Michael Madell, Deputy Superintendent, Acadia National Park, P.O. Box 177, Bar Harbor, Maine 04609, telephone (207) 288–8701 or email *michael_madell@nps.gov.*

SUPPLEMENTARY INFORMATION: The Commission was established by section 103 of Public Law 99–420, as amended, (16 U.S.C. 341 note), and in accordance with the Federal Advisory Committee Act (5 U.S.C. Appendix 1–16). The Commission advises the Secretary and the NPS on matters relating to the management and development of Acadia National Park, including but not limited to, the acquisition of lands and interests in lands (including conservation easements on islands) and the termination of rights of use and occupancy.

The meeting is open to the public. Interested persons may choose to make a public comment at the meeting during the designated time for this purpose. Depending on the number of persons wishing to comment, the length of comments may be limited. Members of the public may also choose to submit written comments by sending them to Michael Madell (see **FOR FURTHER INFORMATION CONTACT**.)

The Commission meeting locations may change based on inclement weather or exceptional circumstances. If a

meeting location is changed, the Superintendent will issue a press release and use local newspapers to announce the change.

Purpose of the Meeting: The Commission meeting will consist of the following proposed agenda items:

1. Committee Reports:
   - Land Conservation
   - Park Use
   - Science and Education
   - Historic
2. Old Business
3. Superintendent's Report
4. Chairman's Report
5. Public Comments
6. Adjournment

Public Disclosure of Information: Before including your address, phone number, email address, or other personal identifying information in your comments, you should be aware that your entire comment—including your personal identifying information—may be made publicly available at any time. While you can ask us in your comment to withhold your personal identifying information from public review, we cannot guarantee that we will be able to do so.

(Authority: 5 U.S.C. Appendix 2)

Alma Ripps,

Chief, Office of Policy.

[FR Doc. 2020–12294 Filed 6–5–20; 8:45 am]

BILLING CODE 4312–52–P

DEPARTMENT OF THE INTERIOR

Bureau of Reclamation

[RR04963000, XXXR0680R1, RR.17549661.1000000]

Notice of Availability of the Lake Powell Pipeline Project Draft Environmental Impact Statement/Draft Resource Management Plan Amendment; Coconino and Mohave Counties, Arizona and Washington and Kane Counties, Utah

AGENCY: Bureau of Reclamation and Bureau of Land Management, Interior.

ACTION: Notice of availability.

SUMMARY: In accordance with the National Environmental Policy Act of 1969, as amended, and the Federal Land Policy and Management Act of 1976, as amended, the Bureau of Reclamation (Reclamation), in coordination with the Bureau of Land Management (BLM) and four other cooperating agencies, announce the availability of the Lake Powell Pipeline (LPP) Project Draft Environmental Impact Statement (EIS) and the Arizona Strip Field Office Draft Resource Management Plan Amendment (RMPA) (Draft EIS/Draft RMPA) for public review and comment for 90 days. The Draft EIS/Draft RMPA describes the potential environmental impacts of the No Action Alternative and two action alternatives for the LPP, proposed by the Utah Board of Water Resources (UBWR).

DATES: To ensure that comments will be considered, Reclamation must receive written comments on the Draft EIS/Draft RMPA within 90 days of the date that this **Federal Register** notice is published. Send written comments on the Draft EIS/Draft RMPA on or before September 8, 2020. Due to unforeseen circumstances, this notice was issued after the Environmental Protection Agency's (EPA) weekly publication of EIS filings in the **Federal Register** on June 5, 2020. A correction representing the revised comment period will be sent to the EPA after this notice is published. Reclamation will host two virtual, online public meetings on July 8 and 9, 2020 due to the continuing public health concerns and a desire to facilitate maximum public participation without the need to limit attendees. Details regarding those meetings, including web login, conference line and registration information will be published on Reclamation's website at *https://www.usbr.gov/uc/envdocs/eis/LakePowellPipeline/index.html* at least 15 days prior to July 8, 2020.

ADDRESSES: Send written comments or requests for copies of the Draft EIS/Draft RMPA to Mr. Rick Baxter, Project Manager, Bureau of Reclamation, 302 East Lakeview Parkway, Provo, Utah 84606 or via email to *lpp@usbr.gov.* The Draft EIS/Draft RMPA is accessible from the following website: *https://www.usbr.gov/uc/envdocs/eis/LakePowellPipeline/index.html.*

FOR FURTHER INFORMATION CONTACT: Mr. Rick Baxter, Project Manager, 801–379–1078; or by email at *rbaxter@usbr.gov.* Persons who use a telecommunications device for the deaf (TDD) may call the Federal Information Relay Service (FIRS) at 1–800–877–8339 to contact the above individual during normal business hours. The FIRS is available 24 hours a day, 7 days a week, to leave a message or question with the above individual. You will receive a reply during normal business hours.

SUPPLEMENTARY INFORMATION: The Draft EIS/Draft RMPA analyzes the potential direct, indirect, and cumulative physical, biological, and socioeconomic environmental effects that may result from construction and operation of the two action alternatives: The Highway Alternative and the Southern Alternative, including three RMPA sub-alternatives for the Southern Alternative. Both alternatives consist of a water delivery pipeline that begins at Lake Powell near Glen Canyon Dam in Page, Arizona, and ends at Sand Hollow Reservoir near St. George, Utah. The pipeline would deliver up to 86,249 acre-feet of water from Lake Powell to Washington County. Both alternatives also include a water exchange contract between Reclamation and UBWR.

The BLM Arizona Strip Field Office is considering amending a portion of the Arizona Strip Field Office (ASFO) Resource Management Plan (RMP) related to the Kanab Creek Area of Critical Environmental Concern (ACEC). Pursuant to 43 CFR 1610.7–2(b), the BLM is required to publish a notice in the **Federal Register** of proposed ACECs, including changes to existing ACECs, and specify the resource use limitations. This notice announces a concurrent 60-day public comment period for proposed changes to the existing Kanab Creek ACEC. The BLM proposes three sub-alternatives under the Southern Alternative to amend the ASFO RMP to consider allowing development of the LPP within the Kanab Creek ACEC or adjust the ACEC boundary. The Kanab Creek ACEC would not change under the No Action or Highway alternatives. Pertinent information regarding changes to the Kanab Creek ACEC, including proposed designation acreage and resource use limitations are described in the table below.

KANAB CREEK ACEC ACRES AND USE RESTRICTIONS UNDER THE ALTERNATIVES

No action alternative and highway alternative	Southern alternative		
	Sub-alternative 1	Sub-alternative 2	Sub-alternative 3
13,148 acres—MA–LR–06: ROWs, permits, leases, easements will be evaluated on a case-by-case basis. New land use authorizations will be discouraged within avoidance areas, allowed only when no reasonable alternative exists and impacts to sensitive resources can be mitigated. Route new ROWs away from high-density listed species' populations, cultural sites, and along edges of avoidance areas. Include mitigation such as underground placement of linear ROWs along existing roads in the House Rock Valley area and special protection measures for archaeological resources. LA–VR–01: Class I: 80,760 acres, Class II: 368,032 acres, Class III: 1,459,374 acres, Class IV: 72,897 acres.	13,148 acres—Amend MA–LR–06 to allow new land use authorizations when effects on ACEC sensitive resources could be mitigated. Amend LA–VR–01: Designated utility corridor inside ACEC would be Visual Resource Management (VRM) Class IV.	12,243 acres—Change VRM designation on 230.6 acres from VRM Class II to VRM Class III. Maintain utility corridor as VRM Class IV.	13,148 acres—Amend MA–LR–06 and LA–VR–01 as in RMPA Sub-alternative 1. Amend MA–LR–12: The utility corridor within Kanab Creek ACEC would be less than 1 mile wide. Manage area outside utility corridor as VRM Class II or Class III. Maintain utility corridor as VRM Class IV.

Authority

The LPP was authorized by the Utah State Legislature under the Lake Powell Pipeline Development Act of 2006 (40 CFR 1501.7; 43 CFR 1610.2 and 1610.7).

Public Review of Draft EIS/Draft RMPA

Copies of the Draft EIS/Draft RMPA are available upon request. See information under the **ADDRESSES** section.

Special Assistance for the Online/Virtual Public Meeting

If special assistance is required at the public meetings, please contact Ms. Ellen Hopp, Galileo Project, LLC, Project Administrator, at *ellen.hopp@galileoaz.com.* Please notify Ms. Hopp as far in advance as possible to enable Reclamation to secure the needed services. If a request cannot be honored, the requestor will be notified.

Public Disclosure

Please note that public comments and information submitted including names, street addresses, and email addresses of persons who submit comments will be available for public review and disclosure at the above address during regular business hours (8 a.m. to 4 p.m.), Monday through Friday, except holidays. Before including your address, phone number, email address, or other personal identifying information in your comment, you should be aware that your entire comment—including your personal identifying information—may be made publicly available at any time. While you can ask us in your comment to withhold your personal identifying information from public review, we cannot guarantee that we will be able to do so.

Brent Esplin,

Regional Director, Upper Colorado Basin—Interior Region 7, Bureau of Reclamation.

[FR Doc. 2020–12382 Filed 6–4–20; 4:15 pm]

BILLING CODE 4332–90–P

INTERNATIONAL TRADE COMMISSION

[Investigation No. 337–TA–1130]

Certain Beverage Dispensing Systems and Components Thereof; Commission Decision To Institute a Rescission Proceeding and To Grant a Petition for Rescission of a Limited Exclusion Order and a Cease and Desist Order; Rescission of a Limited Exclusion Order and a Cease and Desist Order; Termination of Rescission Proceeding

AGENCY: U.S. International Trade Commission.

ACTION: Notice.

SUMMARY: Notice is hereby given that the U.S. International Trade Commission (''Commission'') has determined to institute a rescission proceeding in the above-captioned investigation and to grant a joint motion for rescission of the limited exclusion order (''LEO'') and the cease and desist order (''CDO'') previously issued in the investigation. The LEO and CDO are rescinded and the rescission proceeding is terminated.

FOR FURTHER INFORMATION CONTACT: Sidney A. Rosenzweig, Esq., Office of the General Counsel, U.S. International Trade Commission, 500 E Street SW, Washington, DC 20436, telephone (202) 708–2532. Copies of non-confidential documents filed in connection with this investigation may be viewed on the Commission's electronic docket (EDIS) at *https://edis.usitc.gov.* For help accessing EDIS, please email *EDIS3Help@usitc.gov.* General information concerning the Commission may also be obtained by accessing its internet server at *https://www.usitc.gov.* Hearing-impaired persons are advised that information on this matter can be obtained by contacting the Commission's TDD terminal on (202) 205–1810.

SUPPLEMENTARY INFORMATION: The Commission instituted this investigation on September 5, 2018, based on a complaint filed by Heineken International B.V. and Heineken Supply Chain B.V., both of Amsterdam, The Netherlands; and Heineken USA Inc. of White Plains, New York (collectively, ''Heineken''). 83 FR 45141, 45141–42 (Sept. 5, 2018). The complaint alleges a violation section 337 of the Tariff Act 1930, as amended, 19 U.S.C. 1337 (''section 337'') in the importation into the United States, sale for importation, or sale in the United States after importation of certain beverage dispensing systems and components thereof that allegedly infringe claims 1–11 of U.S. Patent No. 7,188,751 (''the '751 patent''). *Id.* The notice of investigation names as respondents Anheuser-Busch InBev SA, and InBev Belgium NV both of Leuven, Belgium; and Anheuser-Busch, LLC of St. Louis, Missouri (collectively, ''ABI''). *Id.* The Office of Unfair Import Investigations was not named as a party to this investigation. *Id.*

On March 11, 2020, the Commission terminated the investigation with a finding of violation of section 337 as to claims 1, 3, 7, and 10 of the '751 patent. 85 FR 15223, 15224 (Mar. 17, 2020). The

Commission issued an LEO prohibiting the entry of infringing beverage dispensing systems and components thereof and a CDO directed to respondent Anheuser-Busch LLC. *Id.*

On May 4, 2020, Heineken and ABI filed a joint petition to rescind the limited exclusion order and the cease and desist order based on a settlement agreement. The petition contains confidential and non-confidential versions of the Global Settlement Agreement between the parties. On May 26, 2020, the parties supplemented their petition to state that there are no other agreements, written or oral, express or implied between the parties concerning the subject matter of the investigation. *See* 19 CFR 210.76(a)(3).

Having reviewed the petition, as supplemented, and determined that it complies with Commission rules, the Commission has determined to institute a rescission proceeding and to grant the petition. The LEO and the CDO are hereby rescinded.

The rescission proceeding is terminated.

The Commission vote for this determination took place on June 3, 2020.

The authority for the Commission's determination is contained in section 337 of the Tariff Act of 1930, as amended (19 U.S.C. 1337), and in part 210 of the Commission's Rules of Practice and Procedure (19 CFR part 210).

By order of the Commission.

Issued: June 3, 2020.

Lisa Barton,

Secretary to the Commission.

[FR Doc. 2020–12362 Filed 6–5–20; 8:45 am]

BILLING CODE 7020–02–P

DEPARTMENT OF JUSTICE

Bureau of Alcohol, Tobacco, Firearms and Explosives

[OMB Number 1140–0098]

Agency Information Collection Activities; Proposed eCollection eComments Requested; Extension Without Change of a Currently Approved Collection; Prevent All Cigarette Trafficking (PACT) Act Registration Form—ATF Form 5070.1

AGENCY: Bureau of Alcohol, Tobacco, Firearms and Explosives, Department of Justice.

ACTION: 60-Day notice.

SUMMARY: The Department of Justice (DOJ), Bureau of Alcohol, Tobacco, Firearms and Explosives (ATF), will submit the following information collection request to the Office of Management and Budget (OMB) for review and approval in accordance with the Paperwork Reduction Act of 1995. The proposed information collection (IC) is also being published to obtain comments from the public and affected agencies.

DATES: Comments are encouraged and will be accepted for 60 days until August 7, 2020.

FOR FURTHER INFORMATION CONTACT: If you have additional comments, regarding the estimated public burden or associated response time, suggestions, or need a copy of the proposed information collection instrument with instructions, or additional information, please contact: David Marshall, Operational Intelligence Division, internet Investigations Center either by mail at 99 New York Avenue NE, 90 K–250, Washington, DC 20226, by email at *David.Marshall@atf.gov,* or by telephone at 202–648–7118.

SUPPLEMENTARY INFORMATION: Written comments and suggestions from the public and affected agencies concerning the proposed collection of information are encouraged. Your comments should address one or more of the following four points:

—Evaluate whether the proposed collection of information is necessary for the proper performance of the functions of the agency, including whether the information will have practical utility;

—Evaluate the accuracy of the agency's estimate of the burden of the proposed collection of information, including the validity of the methodology and assumptions used;

—Evaluate whether and if so how the quality, utility, and clarity of the information to be collected can be enhanced; and

—Minimize the burden of the collection of information on those who are to respond, including through the use of appropriate automated, electronic, mechanical, or other technological collection techniques or other forms of information technology, *e.g.,* permitting electronic submission of responses.

Overview of This Information Collection

(1) *Type of Information Collection (check justification or form 83):* Extension without change of a currently approved collection.

(2) *The Title of the Form/Collection:* Prevent All Cigarette Trafficking (PACT) Act Registration Form.

(3) *The agency form number, if any, and the applicable component of the Department sponsoring the collection:*

Form number (if applicable): ATF Form 5070.1.

Component: Bureau of Alcohol, Tobacco, Firearms and Explosives, U.S. Department of Justice.

(4) *Affected public who will be asked or required to respond, as well as a brief abstract:*

Primary: Business or other for-profit.

Other (if applicable): None.

Abstract: Any person who sells, transfers, or ships for profit cigarettes and/or smokeless tobacco in interstate commerce, must register with ATF using the Prevent All Cigarette Trafficking (PACT) Act Registration Form—ATF Form 5070.1.

(5) *An estimate of the total number of respondents and the amount of time estimated for an average respondent to respond:* An estimated 400 respondents will utilize the form annually, and it will take each respondent approximately 60 minutes to complete their responses.

(6) *An estimate of the total public burden (in hours) associated with the collection:* The estimated annual public burden associated with this collection is 400 hours, which is equal to 400 (# of respondents) * 1 (# of responses per respondents) * 1 (60 minutes or time taken to complete each response).

(7) *An Explanation of the Change in Estimates:* Due to an increase in both the wage and postage rates, the total public cost burden has risen from $9,396 in 2017 to 13,542 currently.

If additional information is required contact: Melody Braswell, Department Clearance Officer, United States Department of Justice, Justice Management Division, Policy and Planning Staff, Two Constitution Square, 145 N Street NE, 3E.405A, Washington, DC 20530.

Dated: June 3, 2020.

Melody Braswell,

Department Clearance Officer for PRA, U.S. Department of Justice.

[FR Doc. 2020–12361 Filed 6–5–20; 8:45 am]

BILLING CODE 4410–14–P

DEPARTMENT OF JUSTICE

Antitrust Division

United States v. Odyssey Investment Partners Fund V, LP et al.; Proposed Final Judgment and Competitive Impact Statement

Notice is hereby given pursuant to the Antitrust Procedures and Penalties Act, 15 U.S.C. 16(b)–(h), that a proposed

Final Judgment, Stipulation, and Competitive Impact Statement have been filed with the United States District Court for the District of Columbia in *United States of America* v. *Odyssey Investment Partners Fund V, LP et al.,* Civil Action No. 20–cv–1614. On May 28, 2020, the United States filed a Complaint alleging that Communications & Power Industries Inc.'s proposed acquisition of General Dynamics SATCOM Technologies, Inc. would violate Section 7 of the Clayton Act, 15 U.S.C. 18. The proposed Final Judgment, filed at the same time as the Complaint, requires Communications & Power Industries to divest its subsidiary, CPI ASC Signal Division Inc., along with certain tangible and intangible assets.

Copies of the Complaint, proposed Final Judgment, and Competitive Impact Statement are available for inspection on the Antitrust Division's website at *http://www.justice.gov/atr* and at the Office of the Clerk of the United States District Court for the District of Columbia. Copies of these materials may be obtained from the Antitrust Division upon request and payment of the copying fee set by Department of Justice regulations.

Public comment is invited within 60 days of the date of this notice. Such comments, including the name of the submitter, and responses thereto, will be posted on the Antitrust Division's website, filed with the Court, and, under certain circumstances, published in the **Federal Register**. Comments should be directed to Katrina Rouse, Chief, Defense, Industrials, and Aerospace Section, Antitrust Division, Department of Justice, 450 Fifth Street NW, Suite 8700, Washington, DC 20530 (telephone: 202–307–0468).

Suzanne Morris,

Chief, Pre-Merger and Division Statistics.

UNITED STATES DISTRICT COURT FOR THE DISTRICT OF COLUMBIA

United States of America, U.S. Department of Justice, Antitrust Division, 450 Fifth Street NW, Suite 8700, Washington, DC 20530, Plaintiff, v. *Odyssey Investment Partners Fund V, LP, 590 Madison Ave., 39th Floor, New York, NY 10022; Communications and Power Industries LLC, 811 Hansen Way, Palo Alto, CA 94303;* and *General Dynamics Corporation, 11011 Sunset Hills Road, Reston, VA 20190,* Defendants.

Civil Action No. 20–cv–1614
Judge: Hon. Thomas F. Hogan

Complaint

The United States of America (''United States''), acting under the direction of the Attorney General of the United States, brings this civil antitrust action against Defendants Odyssey Investment Partners Fund V, LP (''Odyssey''), Communications and Power Industries LLC (''CPI''), and General Dynamics Corporation (''General Dynamics'') to enjoin CPI's proposed acquisition of General Dynamics SATCOM Technologies, Inc. (''GD SATCOM''), a subsidiary of General Dynamics. The United States complains and alleges as follows:

I. Nature of the Action

1. Pursuant to a purchase agreement dated July 22, 2019, CPI intends to acquire GD SATCOM from its parent company, General Dynamics.

2. CPI and GD SATCOM are the only two significant suppliers of large (four meters in diameter and above) ground station antennas for geostationary satellites (hereinafter ''large geostationary satellite antennas'') for use by the United States military and commercial customers in the United States. Large geostationary satellite antennas are a key component of communications networks utilized by the U.S. Department of Defense (''DoD'') as well as commercial customers, such as broadband internet suppliers, in areas that lack access to the main telecommunications grid.

3. Competition between CPI and GD SATCOM has led to lower prices, higher quality products, and innovative new solutions for large geostationary satellite antennas. The proposed merger would eliminate this competition and leave DoD and commercial customers without meaningful competitive alternatives, likely resulting in higher prices, lower quality, and diminished innovation in the development of these important products.

4. As a result, the proposed acquisition likely would substantially lessen competition in the market for the design, manufacture, and sale of large geostationary satellite antennas in the United States in violation of Section 7 of the Clayton Act, 15 U.S.C. 18.

II. The Defendants

5. Odyssey, a private equity fund managed by Odyssey Investment Partners, is a Delaware limited partnership with its headquarters in New York, New York. Odyssey Investment Partners has raised over $5 billion since its inception and invests in a wide array of industries, including aerospace and defense.

6. CPI is a portfolio company of Odyssey. It is a Delaware corporation with its headquarters in Palo Alto, California. CPI is a global manufacturer of electronic components and subsystems focused primarily on communications and defense markets. CPI had sales of approximately $500 million in 2019 and sells satellite communication antennas through its subsidiary, CPI ASC Signal Division Inc. (''ASC Signal''), a business it acquired in 2017.

7. General Dynamics is a Delaware corporation with its headquarters in Reston, Virginia. General Dynamics's subsidiary, GD SATCOM, designs, manufactures, and sells satellite communications systems used in commercial, defense, and scientific applications and provides related products such as amplifiers and antennas. GD SATCOM earned between $200 million and $300 million in revenues in 2019.

III. Jurisdiction and Venue

8. The United States brings this action under Section 15 of the Clayton Act, 15 U.S.C. 25, as amended, to prevent and restrain Defendants from violating Section 7 of the Clayton Act, 15 U.S.C. 18.

9. Defendants design, manufacture, and sell large geostationary satellite antennas throughout the United States, and their activities in these areas substantially affect interstate commerce. This Court therefore has subject matter jurisdiction over this action pursuant to Section 15 of the Clayton Act, 15 U.S.C. 25, and 28 U.S.C. 1331, 1337(a), and 1345.

10. Defendants have consented to venue and personal jurisdiction in this judicial district. Venue is therefore proper in this district under Section 12 of the Clayton Act, 15 U.S.C. 22 and under 28 U.S.C. 1391(c).

IV. Large Geostationary Satellite Antennas

A. Background

11. Satellite communications networks enable secure communications links in remote areas that lack access to the main telecommunications grid. For example, DoD uses satellite communications networks to communicate with military bases in theaters of war, where access to the communications grid may be intermittent or even non-existent. Similarly, where it is too expensive to run traditional communications lines, commercial network operators provide satellite communications networks that individual users—or clusters of users in a central location—can use to access the internet, television, and voice communications services.

12. Both commercial and military satellite communications networks operate in the same way: Information is

transmitted from a remote user through a satellite in orbit and back down through a ground station that is connected to a traditional communications grid. This process is reversed as information returns to the remote user. At both ends of the satellite communication link, there must be an antenna that can ''see'' the satellite(s) with which the ground stations are interfacing.

13. The satellite is the most critical, and expensive, element of a satellite communications network. Satellite-based design constraints, such as the power of the transmission signal (which is directly impacted by limitations on size and weight) and the orbit in which the satellite will operate, thus drive other significant design decisions for the entire satellite communications network.

14. The other key component of a satellite communications network is the ground station antenna, which connects the satellite to the communications grid. As shown below, the ground station antenna consists of a parabolic dish, the structure on which the dish is mounted, and any motors or other equipment needed to move, or ''point,'' the dish at the satellite(s) in its network.

BILLING CODE 4410–11–P

Figure 1. Diagram of a Large Geostationary Satellite Antenna

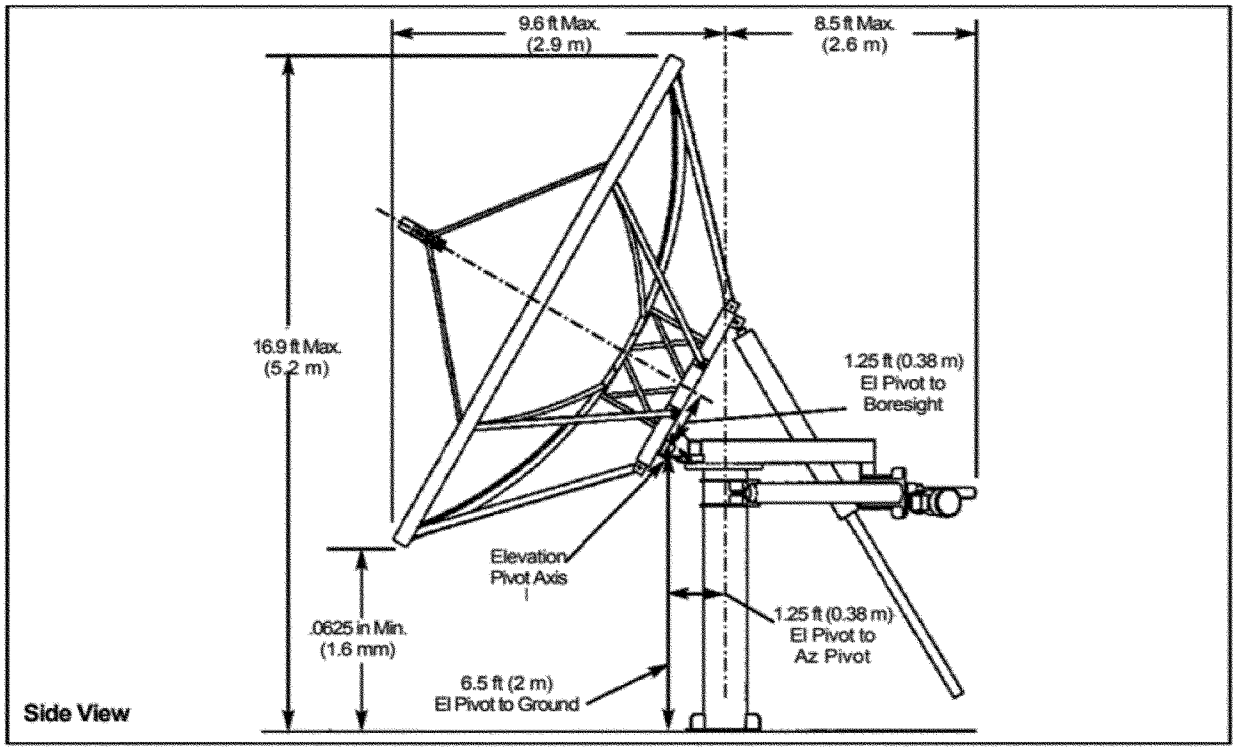

Source: ASC Signal Foundation Specifications
For 4.5-4.6 meter Earth Station Antennas

BILLING CODE 4410–11–C

15. Several characteristics differentiate ground station antennas, but the two most important are the size of the antenna (which is typically measured by the diameter of its parabolic dish) and the ability of the antenna to track satellites that change their position relative to the Earth (as described below, some antennas remain pointed in the same direction while others track satellites as they cross the sky).

16. Antenna size is important because larger antennas can receive fainter signals (*i.e.,* signals impacted by rain, clouds, or other atmospheric conditions) than smaller antennas. As a result, satellite networks using larger antennas are more reliable than networks using smaller antennas. Additionally, because larger antennas can receive fainter signals, the power requirements for the transmitting satellite (which must be supplied through batteries and/or solar generation) are diminished as compared to transmission to smaller antennas. Satellites for larger antennas therefore need not be as large or expensive as satellites for smaller antennas. Larger antennas thus decrease the overall cost of the satellite communications system.

17. The other major factor differentiating between types of ground station antennas is their ability to track satellites that change their position relative to the Earth. For example, satellites in geostationary orbit remain in a fixed position relative to the Earth's rotation and are more than 20,000 miles above Earth. Antennas for geostationary satellites are therefore ''fixed'' and point in one direction. Low-earth orbit (''LEO'') and mid-earth orbit (''MEO'') satellites, by contrast, are multiple thousands of miles closer to earth and rotate the earth every 70 minutes. LEO and MEO satellites thus frequently ''cross'' the sky as they orbit and antennas used to communicate with them must be ''full-motion'' in order to track the LEO and MEO satellites as they move relative to the antennas' positions. While full motion antennas duplicate some of the capabilities of fixed antennas, they are typically only used for LEO and MEO satellites because they are significantly more

expensive due to the motors and structural design elements necessary to ensure accurate full-motion pointing. Fixed antennas are thus more cost-effective than full-motion antennas.

B. Relevant Markets

1. Product Market

18. For DoD customers, satellite communications networks provide vital communications links for the battlefield and other remote locations. For many uses, DoD requires large geostationary satellite antennas in order to guarantee reliable communications connections. DoD cannot switch to smaller geostationary antennas without compromising the reliability and usefulness of its network. Because switching to smaller geostationary antennas would effectively render a satellite communications network unfit for its intended use, DoD is unlikely to switch to smaller geostationary antennas in response to a small but significant increase in price for large geostationary satellite antennas.

19. Commercial customers—whose reliability requirements are not as rigid as DoD's—are also unlikely to switch to smaller geostationary antennas in the event of a small but significant increase in price for large geostationary satellite antennas because, like DoD, doing so would decrease the reliability of their network. Further, switching to smaller geostationary antennas would require a satellite communications network with a larger—and significantly more expensive—satellite at its core, thus increasing the overall cost of the network.

20. Similarly, DoD and commercial customers with geostationary satellites are unlikely to switch from fixed to full-motion antennas—like those used for MEO and LEO satellites—in response to a small but significant increase in price of fixed antennas. Even when full-motion antennas have similar capabilities to fixed antennas, they are significantly more expensive due to the additional motors and equipment necessary to ensure accurate full-motion pointing.

21. For the foregoing reasons, customers will not substitute to smaller or full-motion antennas in response to a small but significant and non-transitory increase in the price of large geostationary satellite antennas. Accordingly, the design, manufacture, and sale of large geostationary satellite antennas is a relevant product market and line of commerce under Section 7 of the Clayton Act, 15 U.S.C. 18.

2. Geographic Market

22. For national security reasons, DoD prefers domestic suppliers of large geostationary satellite antennas when it is deciding on potential antenna sources. Similarly, commercial customers prefer domestic suppliers of large geostationary satellite antennas, in part because they resell network access to DoD and other government customers that prefer to avoid having foreign suppliers for components in the transmission chain for sensitive national security-related information. For these reasons, neither DoD nor commercial customers are likely to turn to any foreign suppliers in the face of a small but significant and non-transitory price increase by domestic suppliers of large geostationary satellite antennas.

23. The United States is therefore a relevant geographic market within the meaning of Section 7 of the Clayton Act, 15 U.S.C. 18.

C. Anticompetitive Effects of the Proposed Transaction

24. CPI, through its subsidiary ASC Signal, and GD SATCOM are the only two significant suppliers that design, manufacture, and sell large geostationary satellite antennas in the United States. The merger would give the combined firm an effective monopoly, leaving customers, including DoD, without a meaningful competitive alternative for this critical component of satellite communications networks.

25. CPI and GD SATCOM compete for sales of large geostationary satellite antennas on the basis of quality, price, and contractual terms such as delivery times. This competition has resulted in higher quality, lower prices, and shorter delivery times. The combination of CPI and GD SATCOM would eliminate this competition and its future benefits to customers, including DoD. Post-acquisition, the merged firm likely would have the incentive and ability to increase prices and offer less favorable contractual terms.

26. Competition between CPI and GD SATCOM has also fostered important industry innovation, leading to antennas that are more durable, can withstand more extreme environments, and operate at higher bandwidths. The combination of CPI and GD SATCOM would eliminate this competition and its future benefits to customers, including DoD. Post-acquisition, the merged firm likely would have less incentive to engage in research and development efforts that lead to innovative and high-quality products.

27. The proposed acquisition, therefore, likely would substantially lessen competition in the design, manufacture, and sale of large geostationary satellite antennas in the United States in violation of Section 7 of the Clayton Act, 15 U.S.C. 18.

D. Difficulty of Entry

28. Entry of additional competitors into the market for the design, manufacture, and sale of large geostationary satellite antennas in the United States is unlikely to prevent the harm to competition that is likely to result if the proposed acquisition is consummated. Production facilities for large geostationary satellite antennas require a substantial investment in both capital equipment and human resources. A new entrant would need to set up a factory to produce parabolic dishes, design the complex electronic assemblies and components necessary to point the antenna, and build assembly lines and testing facilities. Engineering and research personnel would need to be assigned to design, test, and troubleshoot the complex manufacturing process that is necessary to produce large geostationary satellite antennas. Any new products manufactured by such an entrant would also require extensive testing and qualification before they could be used by the U.S. military. Accordingly, entry would be costly and time-consuming.

29. As result of these barriers, entry into the market for the design, manufacture, and sale of large geostationary satellite antennas in the United States would not be timely, likely, or sufficient to defeat the anticompetitive effects likely to result from CPI's acquisition of GD SATCOM.

V. Violations Alleged

30. CPI's acquisition of GD SATCOM likely would substantially lessen competition in the design, manufacture, and sale of large geostationary satellite antennas in the United States in violation of Section 7 of the Clayton Act, 15 U.S.C. 18.

31. Unless enjoined, the acquisition likely would have the following anticompetitive effects, among others, related to the relevant market:

(a) Actual and potential competition between CPI and GD SATCOM would be eliminated;

(b) competition generally likely would be substantially lessened; and

(c) prices likely would increase, quality and innovation would likely decrease, and contractual terms likely would be less favorable to customers.

VI. Request for Relief

32. The United States requests that this Court:

(a) Adjudge and decree that CPI's acquisition of GD SATCOM would be unlawful and violate Section 7 of the Clayton Act, 15 U.S.C. 18;

(b) preliminarily and permanently enjoin and restrain Defendants and all persons acting on their behalf from consummating the proposed acquisition of GD SATCOM by CPI, or from entering into or carrying out any other contract, agreement, plan, or understanding, the effect of which would be to combine CPI with GD SATCOM;

(c) award the United States its costs for this action; and

(d) award the United States such other and further relief as the Court deems just and proper.

Dated: May 28, 2020

Respectfully submitted,

FOR PLAINTIFF UNITED STATES:

Makan Delrahim (D.C. Bar #457795)
Assistant Attorney General

Bernard A. Nigro, JR. (D.C. Bar #412357)
Principal Deputy Assistant Attorney General

Alexander P. Okuliar (D.C. Bar # 481103)
Deputy Assistant Attorney General

Kathleen S. O'Neill
Senior Director of Investigations & Litigation

Katrina H. Rouse (D.C. Bar #1013035)
Chief Defense, Industrials, and Aerospace Section

Jay D. Owen*
Assistant Chief, Defense, Industrials, and Aerospace Section

Rebecca Valentine (D.C. Bar #989607)
Kevin Quin (D.C. Bar #415268)
Attorneys for the United States, Defense, Industrials, and Aerospace Section, U.S. Department of Justice, Antitrust Division, 450 Fifth Street NW, Suite 8700, Washington, D.C. 20530, Telephone: (202) 598–2987, Facsimile: (202) 514–9033, Email: jay.owen@usdoj.gov

*Lead Attorney to be Noticed

UNITED STATES DISTRICT COURT FOR THE DISTRICT OF COLUMBIA

United States of America, Plaintiff, v. *Odyssey Investment Partners Fund V, LP; Communications & Power LLC, and General Dynamics Corporation, Defendants.*

Civil Action No. 20–cv–1614

Judge: Hon. Thomas F. Hogan

Proposed Final Judgment

Whereas, Plaintiff, United States of America, filed its Complaint on May 28, 2020, the United States and Defendants, Odyssey Investment Partners Fund V, LP (''Odyssey''), Communications & Power Industries LLC (''CPI''), and General Dynamics Corporation (''General Dynamics''), by their respective attorneys, have consented to entry of this Final Judgment without trial or adjudication of any issue of fact or law and without this Final Judgment constituting any evidence against or admission by a party regarding any issue of fact or law;

And whereas, Defendants agree to be bound by the provisions of this Final Judgment pending its approval by the Court;

And whereas, the essence of this Final Judgment is the prompt and certain divestiture of certain rights or assets by Defendants to assure that competition is not substantially lessened;

And whereas, Defendants agree to make a divestiture for the purpose of remedying the loss of competition alleged in the Complaint;

And whereas, Defendants represent that the divestiture and other relief required by this Final Judgment can and will be made and that Defendants will not later raise a claim of hardship or difficulty as grounds for asking the Court to modify any provision of this Final Judgment;

Now therefore, before any testimony is taken, without trial or adjudication of any issue of fact or law, and upon consent of the parties, *it is ordered, adjudged, and decreed:*

I. Jurisdiction

The Court has jurisdiction over the subject matter of and each of the parties to this action. The Complaint states a claim upon which relief may be granted against Defendants under Section 7 of the Clayton Act, as amended (15 U.S.C. 18).

II. Definition

As used in this Final Judgment:

A. ''Acquirer'' means the entity to whom Defendants divest the Divestiture Assets.

B. ''Odyssey'' means Defendant Odyssey Investment Partners Fund V, LP, a Delaware limited partnership with its headquarters in New York, New York, its successors and assigns, and its subsidiaries, divisions, groups, affiliates, including Odyssey Investment Partners, partnerships, and joint ventures, and their directors, officers, managers, agents, and employees.

C. ''Odyssey Investment Partners'' means Odyssey Investment Partners, LLC, an affiliate of Odyssey and a Delaware limited liability company with its headquarters in New York, New York, its successors and assigns, and its subsidiaries, divisions, groups, affiliates, partnerships, and joint ventures, and their directors, officers, managers, agents and employees.

D. ''CPI'' means Defendant Communications & Power Industries LLC, a Delaware limited liability company with its headquarters in Palo Alto, California, its successors and assigns, and its subsidiaries, divisions, groups, affiliates, partnerships, and joint ventures, and their directors, officers, managers, agents, and employees. As used in this definition, the terms subsidiaries, divisions, groups, affiliates, partnerships, and joint ventures refer to any person or entity in which CPI holds twenty-five (25) percent or more total ownership or control.

E. ''General Dynamics'' means Defendant General Dynamics Corporation, a Delaware corporation with its headquarters in Reston, Virginia, its successors and assigns, and its subsidiaries, divisions, groups, affiliates, partnerships, and joint ventures, and their directors, officers, managers, agents, and employees.

F. ''GD SATCOM'' means General Dynamics SATCOM Technologies, Inc., a Delaware corporation with its headquarters in Fairfax, Virginia, its successors and assigns, and its subsidiaries, divisions, groups, affiliates, partnerships, and joint ventures, and their directors, officers, managers, agents, and employees. GD SATCOM is a wholly-owned subsidiary of General Dynamics.

G. ''ASC Signal'' means CPI ASC Signal Division Inc., a Delaware corporation with its headquarters in Plano, Texas, its successors and assigns, and its subsidiaries, divisions, groups, affiliates, partnerships, and joint ventures, and their directors, officers, managers, agents, and employees. ASC Signal is a wholly-owned subsidiary of CPI.

H. ''Divestiture Assets'' means ASC Signal, including but not limited to:

1. The support facility located at 1120 Jupiter Road, Suite 102, Plano, Texas 75074;

2. The manufacturing facility located at 606 Beech Street West, Whitby, Ontario, Canada L1N 0E7;

3. The testing facility located at 9860 Heron Rd., Ashburn, Ontario, Canada L0B 1A0;

4. The testing facility located at 1411 CR 2740, Caddo Mills, Texas 75135;

5. All tangible assets related to or used in connection with ASC Signal, including, but not limited to: Research and development activities; all manufacturing equipment, tooling and fixed assets, personal property, inventory, office furniture, materials, supplies, and other tangible property; all licenses, permits, certifications, and authorizations issued by any governmental organization; all contracts, teaming arrangements,

agreements, leases, commitments, certifications, and understandings, including supply agreements and development and production contracts; all customer lists, contracts, accounts, and credit records; all repair and performance records; and all other records; and

6. All intangible assets related to or used in connection with ASC Signal, including, but not limited to: All patents; licenses and sublicenses; intellectual property; copyrights; trademarks, trade names, service marks, and service names; technical information; computer software (including software developed by third parties), and related documentation; customer relationships, agreements, and contracts; know-how; trade secrets; drawings; blueprints; designs; design protocols; specifications for materials; specifications for parts and devices; safety procedures for the handling of materials and substances; quality assurance and control procedures; design tools and simulation capability; all manuals and technical information ASC Signal provides to its own employees, customers, suppliers, agents, or licensees; and all research data concerning historic and current research and development efforts, including, but not limited to, designs of experiments, and the results of successful and unsuccessful designs and experiments.

I. ''Relevant Personnel'' means all full-time, part-time, or contract employees of (i) ASC Signal, and (ii) all additional full-time, part-time, or contract employees of CPI, wherever located, primarily involved in the design, manufacture, or sale of geostationary antennas larger than four meters in diameter, including, but not limited to, the reflector, pedestal, and tracking and control mechanisms used in antennas. Notwithstanding the foregoing, Relevant Personnel does not include employees of CPI primarily engaged in human resources, legal, or other general or administrative support functions.

J. ''Regulatory Approvals'' means (i) any approvals or clearances pursuant to filings with the Committee on Foreign Investment in the United States (''CFIUS''), or under antitrust or competition laws required for the Transaction to proceed; and (ii) any approvals or clearances pursuant to filings with CFIUS, or under antitrust, competition, or other U.S. or international laws required for Acquirer's acquisition of the Divestiture Assets to proceed.

K. ''Transaction'' means the proposed acquisition of GD SATCOM by CPI.

III. Applicability

A. This Final Judgment applies to Odyssey, CPI, and General Dynamics, as defined above, and all other persons, in active concert or participation with any Defendant, who receive actual notice of this Final Judgment.

B. If, prior to complying with Section IV and Section V of this Final Judgment, CPI sells or otherwise disposes of all or substantially all of its assets or of lesser business units that include the Divestiture Assets, CPI must require the purchaser to be bound by the provisions of this Final Judgment. CPI need not obtain such an agreement from Acquirer.

IV. Divestiture

A. CPI is ordered and directed, within the later of sixty (60) calendar days after the Court's entry of the Hold Separate Stipulation and Order in this matter, or thirty (30) calendar days after Regulatory Approvals have been received, to divest the Divestiture Assets in a manner consistent with this Final Judgment to an Acquirer acceptable to the United States, in its sole discretion. The United States, in its sole discretion, may agree to one or more extensions of this time period not to exceed ninety (90) calendar days in total, and will notify the Court of any extensions. CPI agrees to use its best efforts to divest the Divestiture Assets as expeditiously as possible.

B. In accomplishing the divestiture ordered by this Final Judgment, CPI promptly must make known, by usual and customary means, the availability of the Divestiture Assets. CPI must inform any person making an inquiry regarding a possible purchase of the Divestiture Assets that the Divestiture Assets are being divested in accordance with this Final Judgment and must provide that person with a copy of this Final Judgment. CPI must offer to furnish to all prospective Acquirers, subject to customary confidentiality assurances, all information and documents relating to the Divestiture Assets customarily provided in a due-diligence process; provided, however, that CPI need not provide information or documents subject to the attorney-client privilege or work-product doctrine. CPI must make this information available to the United States at the same time that the information is made available to any other person.

C. CPI must cooperate with and assist Acquirer in identifying and hiring all Relevant Personnel, including:

1. Within ten (10) business days following the filing of the Complaint in this matter, CPI must identify all Relevant Personnel to Acquirer and the United States, including by providing organization charts covering all Relevant Personnel.

2. Within ten (10) business days following receipt of a request by Acquirer or the United States, CPI must provide to Acquirer and the United States the following additional information related to Relevant Personnel: Name; job title; current salary and benefits including most recent bonus paid, aggregate annual compensation, current target or guaranteed bonus, if any, and any other payments due to or promises made to the employee; descriptions of reporting relationships, past experience, responsibilities, and training and educational histories; lists of all certifications; and all job performance evaluations. If CPI is barred by any applicable laws from providing any of this information, within ten (10) business days following receipt of the request, CPI must provide the requested information to the full extent permitted by law and also must provide a written explanation of CPI's inability to provide the remaining information.

3. At the request of Acquirer, CPI must promptly make Relevant Personnel available for private interviews with Acquirer during normal business hours at a mutually agreeable location or via teleconference or videoconference.

4. Defendants must not interfere with any efforts by Acquirer to employ any Relevant Personnel. Interference includes but is not limited to offering to increase the salary or improve the benefits of Relevant Personnel unless the offer is part of a company-wide increase in salary or benefits that was announced prior to August 5, 2019. Defendants' obligations under this paragraph will expire six (6) months after the divestiture of the Divestiture Assets pursuant to this Final Judgment.

5. For Relevant Personnel who elect employment with Acquirer within six (6) months of the date on which the Divestiture Assets are divested to Acquirer, CPI must waive all non-compete and non-disclosure agreements, vest all unvested pension and other equity rights, and provide all benefits that those Relevant Personnel otherwise would have been provided had the Relevant Personnel continued employment with CPI, including but not limited to any retention bonuses or payments CPI may maintain reasonable restrictions on disclosure by Relevant Personnel of CPI's proprietary non-public information that is unrelated to ASC Signal and not otherwise required to be disclosed by this Final Judgment.

6. For a period of twelve (12) months from the date on which the Divestiture Assets are divested to Acquirer, Defendants may not solicit to hire Relevant Personnel who were hired by Acquirer within six (6) months of the date on which the Divestiture Assets are divested to Acquirer unless (a) an individual is terminated or laid off by Acquirer or (b) Acquirer agrees in writing that Defendants may solicit to hire that individual. Nothing in this paragraph prohibits Defendants from advertising employment openings using general solicitations or advertisements.

D. CPI must permit prospective Acquirers of the Divestiture Assets to have reasonable access to make inspections of the physical facilities and access to all environmental, zoning, and other permit documents and information, and all financial, operational, or other documents and information customarily provided as part of a due diligence process.

E. CPI must warrant to Acquirer that each asset to be divested will be fully operational and without material defect on the date of sale.

F. Defendants must not take any action that will impede in any way the permitting, operation, or divestiture of the Divestiture Assets.

G. CPI must assign, subcontract, or otherwise transfer all contracts, agreements, and relationships related to the Divestiture Assets, including all supply and sales contracts, to Acquirer, *provided however,* that for any contracts or agreements that require the consent of another party to sign, subcontract, or otherwise transfer, CPI must use best efforts to accomplish this assignment, subcontracting or other transfer. Defendants must not interfere with any negotiations between Acquirer and a contracting party.

H. At the option of Acquirer, and subject to approval by the United States in its sole discretion, on or before the date on which the Divestiture Assets are divested to Acquirer, CPI must enter into a contract to provide transition services for back office, human resource, and information technology services and support for ASC Signal for a period of up to twelve (12) months on terms and conditions reasonably related to market conditions for the provision of the transition services. The United States, in its sole discretion, may approve one or more extensions of this contract for transition services, for a total of up to an additional six (6) months. If Acquirer seeks an extension of the term of this contract for transition services, CPI must notify the United States in writing at least three (3) months prior to the date the contract expires. Acquirer may terminate a contract for transition services without cost or penalty at any time upon commercially reasonable notice. The employee(s) of CPI tasked with providing these transition services must not share any competitively sensitive information of Acquirer with any other employee of CPI.

I. CPI must warrant to Acquirer that there are no material defects in the environmental, zoning, or other permits pertaining to the operation of the Divestiture Assets. Following the sale of the Divestiture Assets, Defendants must not undertake, directly or indirectly, any challenges to the environmental, zoning, or other permits relating to the operation of the Divestiture Assets.

J. Unless the United States otherwise consents in writing, the divestiture pursuant to Section IV or by a Divestiture Trustee appointed pursuant to Section V of this Final Judgment must include the entire Divestiture Assets, and must be accomplished in such a way as to satisfy the United States, in its sole discretion, that the Divestiture Assets can and will be used by Acquirer as part of a viable, ongoing business of the design, manufacture, and sale of large ground station antennas for geostationary satellites, and will remedy the competitive harm alleged in the Complaint. The divestiture, whether pursuant to Section IV or Section V of this Final Judgment,

(1) must be made to an Acquirer that, in the United States' sole judgment, has the intent and capability (including the necessary managerial, operational, technical, and financial capability) of competing effectively in the business of the design, manufacture, and sale of large ground station antennas for geostationary satellites; and

(2) must be accomplished so as to satisfy the United States, in its sole discretion, that none of the terms of any agreement between an Acquirer and CPI give CPI the ability unreasonably to raise Acquirer's costs, to lower Acquirer's efficiency, or otherwise to interfere in the ability of Acquirer to compete effectively.

K. If any term of an agreement between CPI and Acquirer to effectuate the divestiture required by this Final Judgment varies from a term of this Final Judgment then, to the extent that CPI cannot fully comply with both, this Final Judgment determines CPI's obligations.

V. Appointment of Divestiture Trustee

A. If CPI has not divested the Divestiture Assets within the period specified in Paragraph IV(A), CPI must immediately notify the United States of that fact in writing. Upon application of the United States, the Court will appoint a Divestiture Trustee selected by the United States and approved by the Court to effect the divestiture of the Divestiture Assets.

B. After the appointment of a Divestiture Trustee by the Court, only the Divestiture Trustee will have the right to sell the Divestiture Assets. The Divestiture Trustee will have the power and authority to accomplish the divestiture to an Acquirer acceptable to the United States, in its sole discretion, at a price and on terms as are then obtainable upon reasonable effort by the Divestiture Trustee, subject to the provisions of Sections IV, V, and VI of this Final Judgment, and will have other powers as the Court deems appropriate. Subject to Paragraph V(D) of this Final Judgment, the Divestiture Trustee may hire at the cost and expense of CPI any agents or consultants, including, but not limited to, investment bankers, attorneys, and accountants, who will be solely accountable to the Divestiture Trustee, reasonably necessary in the Divestiture Trustee's judgment to assist in the divestiture. Any such agents or consultants will serve on such terms and conditions as the United States approves, including confidentiality requirements and conflict of interest certifications.

C. Defendants may not object to a sale by the Divestiture Trustee on any ground other than malfeasance by the Divestiture Trustee. Objections by Defendants must be conveyed in writing to the United States and the Divestiture Trustee within ten (10) calendar days after the Divestiture Trustee has provided the notice required under Section VI.

D. The Divestiture Trustee will serve at the cost and expense of CPI pursuant to a written agreement, on such terms and conditions as the United States approves, including confidentiality requirements and conflict of interest certifications. The Divestiture Trustee will account for all monies derived from the sale of the assets sold by the Divestiture Trustee and all costs and expenses so incurred. After approval by the Court of the Divestiture Trustee's accounting, including fees for any of its services yet unpaid and those of any agents and consultants retained by the Divestiture Trustee, all remaining money will be paid to CPI and the trust will then be terminated. The compensation of the Divestiture Trustee and any agents or consultants retained by the Divestiture Trustee must be reasonable in light of the value of the Divestiture Assets and based on a fee arrangement that provides the Divestiture Trustee with incentives based on the price and terms of the divestiture and the speed with which it

is accomplished, but the timeliness of the divestiture is paramount. If the Divestiture Trustee and CPI are unable to reach agreement on the Divestiture Trustee's or any agents' or consultants' compensation or other terms and conditions of engagement within fourteen (14) calendar days of the appointment of the Divestiture Trustee, the United States may, in its sole discretion, take appropriate action, including making a recommendation to the Court. Within three (3) business days of hiring any agent or consultant, the Divestiture Trustee must provide written notice of the hiring and rate of compensation to CPI and the United States.

E. CPI must use its best efforts to assist the Divestiture Trustee in accomplishing the required divestiture. The Divestiture Trustee and any agents or consultants retained by the Divestiture Trustee must have full and complete access to the personnel, books, records, and facilities of the business to be divested, and CPI must provide or develop financial and other information relevant to such business as the Divestiture Trustee may reasonably request, subject to reasonable protection for trade secrets; other confidential research, development, or commercial information; or any applicable privileges. Defendants may not take any action to interfere with or impede the Divestiture Trustee's accomplishment of the divestiture.

F. After appointment, the Divestiture Trustee will file monthly reports with the United States setting forth the Divestiture Trustee's efforts to accomplish the divestiture ordered by this Final Judgment. Reports must include the name, address, and telephone number of each person who, during the preceding month, made an offer to acquire, expressed an interest in acquiring, entered into negotiations to acquire, or was contacted or made an inquiry about acquiring, any interest in the Divestiture Assets and will describe in detail each contact with any such person. The Divestiture Trustee will maintain full records of all efforts made to divest the Divestiture Assets.

G. If the Divestiture Trustee has not accomplished the divestiture ordered by this Final Judgment within six months of appointment, the Divestiture Trustee must promptly file with the Court a report setting forth: (1) The Divestiture Trustee's efforts to accomplish the required divestiture; (2) the reasons, in the Divestiture Trustee's judgment, why the required divestiture has not been accomplished; and (3) the Divestiture Trustee's recommendations. To the extent such report contains information that the Divestiture Trustee deems confidential, such report will not be filed in the public docket of the Court. The Divestiture Trustee will at the same time furnish such report to the United States, which will have the right to make additional recommendations to the Court consistent with the purpose of the trust. The Court thereafter may enter such orders as it deems appropriate to carry out the purpose of this Final Judgment, which, if necessary, may include extending the trust and the term of the Divestiture Trustee's appointment by a period requested by the United States.

H. If the United States determines that the Divestiture Trustee is not acting diligently or in a reasonably cost-effective manner, the United States may recommend that the Court appoint a substitute Divestiture Trustee.

VI. Notice of Proposed Divestiture

A. Within two (2) business days following execution of a definitive divestiture agreement, CPI or the Divestiture Trustee, whichever is then responsible for effecting the divestiture required herein, must notify the United States of a proposed divestiture required by this Final Judgment. If the Divestiture Trustee is responsible for effecting the divestiture, the Divestiture Trustee also must notify Defendants. The notice must set forth the details of the proposed divestiture and list the name, address, and telephone number of each person not previously identified who offered or expressed an interest in or desire to acquire any ownership interest in the Divestiture Assets, together with full details of the same.

B. Within fifteen (15) calendar days of receipt by the United States of this notice, the United States may request from Defendants, the proposed Acquirer, other third parties, or the Divestiture Trustee, if applicable, additional information concerning the proposed divestiture, the proposed Acquirer and other prospective Acquirers. Defendants and the Divestiture Trustee must furnish the additional information requested within fifteen (15) calendar days of the receipt of the request, unless the United States provides written agreement to a different period.

C. Within forty-five (45) calendar days after receipt of the notice or within twenty (20) calendar days after the United States has been provided the additional information requested from Defendants, the proposed Acquirer, other third parties, and the Divestiture Trustee, whichever is later, the United States must provide written notice to Defendants and the Divestiture Trustee, if there is one, stating whether or not the United States, in its sole discretion, objects to the proposed Acquirer or any other aspect of the proposed divestiture. If the United States provides written notice that it does not object, the divestiture may be consummated, subject only to Defendants' limited right to object to the sale under Paragraph V(C) of this Final Judgment. Absent written notice that the United States does not object or upon objection by the United States, a divestiture may not be consummated. Upon objection by Defendants pursuant to Paragraph V(C), a divestiture by the Divestiture Trustee may not be consummated unless approved by the Court.

D. No information or documents obtained pursuant to Section VI may be divulged by the United States to any person other than an authorized representative of the executive branch of the United States, except in the course of legal proceedings to which the United States is a party (including grand-jury proceedings), for the purpose of evaluating a proposed Acquirer or securing compliance with this Final Judgment, or as otherwise required by law.

E. In the event of a request by a third party for disclosure of information under the Freedom of Information Act, 5 U.S.C. 552, the Antitrust Division will act in accordance with that statute, and the Department of Justice regulations at 28 CFR part 16, including the provision on confidential commercial information, at 28 CFR 16.7. Persons submitting information to the Antitrust Division should designate the confidential commercial information portions of all applicable documents and information under 28 CFR 16.7. Designations of confidentiality expire ten years after submission, ''unless the submitter requests and provides justification for a longer designation period.'' *See* 28 CFR 16.7(b).

F. If at the time a person furnishes information or documents to the United States pursuant to Section VI, that person represents and identifies in writing information or documents for which a claim of protection may be asserted under Rule 26(c)(1)(G) of the Federal Rules of Civil Procedure, and marks each pertinent page of such material, ''Subject to claim of protection under Rule 26(c)(1)(G) of the Federal Rules of Civil Procedure,'' the United States must give that person ten calendar days' notice before divulging the material in any legal proceeding (other than a grand-jury proceeding).

VII. Financing

Defendants may not finance all or any part of Acquirer's purchase of all or part of the Divestiture Assets made pursuant to this Final Judgment.

VIII. Hold Separate

Until the divestiture required by this Final Judgment has been accomplished, Defendants must take all steps necessary to comply with the Hold Separate Stipulation and Order entered by the Court. Defendants will take no action that would jeopardize the divestiture ordered by the Court.

IX. Affidavits

A. Within twenty (20) calendar days of the filing of the Complaint in this matter, and every thirty (30) calendar days thereafter until the divestiture required by this Final Judgment has been completed, Defendants must deliver to the United States an affidavit describing the fact and manner of Defendants' compliance with this Final Judgment. Odyssey's affidavits must be signed by the Vice Chairman and a Managing Principal of Odyssey Investment Partners; CPI's affidavits must be signed by its Chief Financial Officer and its highest-ranking officer; and General Dynamics's affidavits must be signed by General Dynamics Mission Systems' President and General Counsel. The United States, in its sole discretion, may approve different signatories for each affidavit. Each affidavit must include the name, address, and telephone number of each person who, during the preceding thirty (30) calendar days, made an offer to acquire, expressed an interest in acquiring, entered into negotiations to acquire, or was contacted or made an inquiry about acquiring, an interest in the Divestiture Assets, and must describe in detail each contact with such persons during that period. Each affidavit also must include a description of the efforts Defendants have taken to solicit buyers for and complete the sale of the Divestiture Assets, and to provide required information to prospective Acquirers. Each affidavit also must include a description of any limitations placed by Defendants on information provided to prospective Acquirers. If the information set forth in the affidavit is true and complete, objection by the United States to information provided by Defendants to prospective Acquirers must be made within fourteen (14) calendar days of receipt of the affidavit.

B. Within twenty (20) calendar days of the filing of the Complaint in this matter, Defendants must deliver to the United States an affidavit that describes in reasonable detail all actions Defendants have taken and all steps Defendants have implemented on an ongoing basis to comply with Section VIII of this Final Judgment. Defendants must deliver to the United States an affidavit describing any changes to the efforts and actions outlined in Defendants' earlier affidavits filed pursuant to Section IX within fifteen (15) calendar days after the change is implemented.

C. CPI must keep all records of all efforts made to preserve and divest the Divestiture Assets until one year after the divestiture has been completed.

X. Compliance Inspection

A. For the purposes of determining or securing compliance with this Final Judgment, or of related orders such as a Hold Separate Stipulation and Order or of determining whether this Final Judgment should be modified or vacated, and subject to any legally-recognized privilege, from time to time authorized representatives of the United States, including agents retained by the United States, must, upon written request of an authorized representative of the Assistant Attorney General in charge of the Antitrust Division, and reasonable notice to Defendants, be permitted:

(1) Access during Defendants' office hours to inspect and copy, or at the option of the United States, to require Defendants to provide electronic copies of all books, ledgers, accounts, records, data, and documents in the possession, custody, or control of Defendants, relating to any matters contained in this Final Judgment; and

(2) to interview, either informally or on the record, Defendants' officers, employees, or agents, who may have their individual counsel present, regarding such matters. The interviews must be subject to the reasonable convenience of the interviewee and without restraint or interference by Defendants.

B. Upon the written request of an authorized representative of the Assistant Attorney General in charge of the Antitrust Division, Defendants must submit written reports or respond to written interrogatories, under oath if requested, relating to any of the matters contained in this Final Judgment.

C. No information or documents obtained pursuant to Section X may be divulged by the United States to any person other than an authorized representative of the executive branch of the United States, except in the course of legal proceedings to which the United States is a party (including grand jury proceedings), for the purpose of securing compliance with this Final Judgment, or as otherwise required by law.

D. In the event of a request by a third party for disclosure of information under the Freedom of Information Act, 5 U.S.C. 552, the Antitrust Division will act in accordance with that statute, and the Department of Justice regulations at 28 CFR part 16, including the provision on confidential commercial information, at 28 CFR 16.7. Defendants submitting information to the Antitrust Division should designate the confidential commercial information portions of all applicable documents and information under 28 CFR 16.7. Designations of confidentiality expire ten years after submission, ''unless the submitter requests and provides justification for a longer designation period.'' *See* 28 CFR 16.7(b).

E. If at the time that Defendants furnish information or documents to the United States pursuant to Section X, Defendants represent and identify in writing information or documents for which a claim of protection may be asserted under Rule 26(c)(1)(G) of the Federal Rules of Civil Procedure, and Defendants mark each pertinent page of such material, ''Subject to claim of protection under Rule 26(c)(1)(G) of the Federal Rules of Civil Procedure,'' the United States must give Defendants ten (10) calendar days' notice before divulging the material in any legal proceeding (other than a grand jury proceeding).

XI. Notification

A. Unless a transaction is otherwise subject to the reporting and waiting period requirements of the Hart-Scott-Rodino Antitrust Improvements Act of 1976, as amended, 15 U.S.C. 18a (the ''HSR Act''), Odyssey and CPI, without providing advance notification to the United States, may not directly or indirectly acquire any assets of or any interest in, including a financial, security, loan, equity, or management interest, an entity involved in the design, manufacture, and sale of large ground station antennas for geostationary satellites in the United States during the term of this Final Judgment.

B. Odyssey and CPI must provide the notification required by Section XI in the same format as, and in accordance with the instructions relating to, the Notification and Report Form set forth in the Appendix to Part 803 of Title 16 of the Code of Federal Regulations as amended, except that the information requested in Items 5 through 8 of the instructions must be provided only about the design, manufacture, and sale of large ground station antennas for geostationary satellites. Notification must be provided at least thirty (30)

calendar days before acquiring any such interest, and must include, beyond the information required by the instructions, the names of the principal representatives who negotiated the agreement on behalf of each party, and all management or strategic plans discussing the proposed transaction. If, within the 30-day period following notification, representatives of the United States make a written request for additional information, Odyssey and CPI may not consummate the proposed transaction or agreement until thirty (30) calendar days after submitting all requested information. Early termination of the waiting periods in this Paragraph may be requested and, where appropriate, granted in the same manner as is applicable under the requirements and provisions of the HSR Act and rules promulgated thereunder. Section XI will be broadly construed and any ambiguity or uncertainty regarding the filing of notice under Section XI will be resolved in favor of filing notice.

C. Paragraphs XI(A) and XI(B) will only apply to Odyssey to the extent it continues to hold an interest in CPI.

XII. Limitations on Reacquisition

Odyssey and CPI may not reacquire any part of or any interest in the Divestiture Assets during the term of this Final Judgment

XIII. Retention of Jurisdiction

The Court retains jurisdiction to enable any party to this Final Judgment to apply to the Court at any time for further orders and directions as may be necessary or appropriate to carry out or construe this Final Judgment, to modify any of its provisions, to enforce compliance, and to punish violations of its provisions.

XIV. Enforcement of Final Judgment

A. The United States retains and reserves all rights to enforce the provisions of this Final Judgment, including the right to seek an order of contempt from the Court. Defendants agree that in a civil contempt action, a motion to show cause, or a similar action brought by the United States regarding an alleged violation of this Final Judgment, the United States may establish a violation of this Final Judgment and the appropriateness of a remedy therefor by a preponderance of the evidence, and Defendants waive any argument that a different standard of proof should apply.

B. This Final Judgment should be interpreted to give full effect to the procompetitive purposes of the antitrust laws and to restore the competition the United States alleged was harmed by the challenged conduct. Defendants agree that they may be held in contempt of, and that the Court may enforce, any provision of this Final Judgment that, as interpreted by the Court in light of these procompetitive principles and applying ordinary tools of interpretation, is stated specifically and in reasonable detail, whether or not it is clear and unambiguous on its face. In any such interpretation, the terms of this Final Judgment should not be construed against either party as the drafter.

C. In an enforcement proceeding in which the Court finds that Defendants have violated this Final Judgment, the United States may apply to the Court for a one-time extension of this Final Judgment, together with other relief that may be appropriate. In connection with a successful effort by the United States to enforce this Final Judgment against a Defendant, whether litigated or resolved before litigation, that Defendant agrees to reimburse the United States for the fees and expenses of its attorneys, as well as all other costs including experts' fees, incurred in connection with that enforcement effort, including in the investigation of the potential violation.

D. For a period of four (4) years following the expiration of this Final Judgment, if the United States has evidence that a Defendant violated this Final Judgment before it expired, the United States may file an action against that Defendant in this Court requesting that the Court order: (1) Defendant to comply with the terms of this Final Judgment for an additional term of at least four years following the filing of the enforcement action; (2) all appropriate contempt remedies; (3) additional relief needed to ensure the Defendant complies with the terms of this Final Judgment; and (4) fees or expenses as called for by Section XIV.

XV. Expiration of Final Judgment

Unless the Court grants an extension, this Final Judgment will expire ten (10) years from the date of its entry, except that after five (5) years from the date of its entry, this Final Judgment may be terminated upon notice by the United States to the Court and Defendants that the divestiture has been completed and the continuation of this Final Judgment no longer is necessary or in the public interest.

XVI. Public Interest Determination

Entry of this Final Judgment is in the public interest. The parties have complied with the requirements of the Antitrust Procedures and Penalties Act, 15 U.S.C. 16, including by making available to the public copies of this Final Judgment, the Competitive Impact Statement, comments thereon, and the United States' responses to comments. Based upon the record before the Court, which includes the Competitive Impact Statement and any comments and responses to comments filed with the Court, entry of this Final Judgment is in the public interest.

Date:

[Court approval subject to procedures of Antitrust Procedures and Penalties Act, 15 U.S.C. 16]

United States District Judge

UNITED STATES DISTRICT COURT FOR THE DISTRICT OF COLUMBIA

United States of America, Plaintiff, v. *Odyssey Investment Partners Fund V, LP*; *Communications* & *Power Industries LLC,* and *General Dynamics Corporation*, Defendants.

Civil Action No. 20–cv–1614
Judge: Hon. Thomas F. Hogan

Competitive Impact Statement

The United States of America, under Section 2(b) of the Antitrust Procedures and Penalties Act, 15 U.S.C. 16(b)–(h) (the ''APPA'' or ''Tunney Act''), files this Competitive Impact Statement relating to the proposed Final Judgment submitted for entry in this civil antitrust proceeding.

I. Nature and Purpose of the Proceeding

On July 22, 2019, Communications and Power Industries LLC (''CPI'') agreed to acquire General Dynamics SATCOM Technologies, Inc. (''GD SATCOM'') from its parent company, General Dynamics Corporation (''General Dynamics''), for approximately $175 million. The United States filed a civil antitrust Complaint on May 28, 2020 seeking to enjoin the proposed acquisition. The Complaint alleges that the likely effect of this acquisition would be to substantially lessen competition for the design, manufacture, and sale of large ground station antennas for geostationary satellites (''large geostationary satellite antennas'') in violation of Section 7 of the Clayton Act, 15 U.S.C. 18.

At the same time the Complaint was filed, the United States filed a Hold Separate Stipulation and Order (''Stipulation and Order'') and proposed Final Judgment, which are designed to address the anticompetitive effects of the acquisition. Under the proposed Final Judgment, which is explained more fully below, CPI is required to divest its subsidiary CPI ASC Signal Division Inc. (''ASC Signal''), which houses the entirety of CPI's business

that competes in the design, manufacture, and sale of large geostationary satellite antennas. Under the terms of the Stipulation and Order, CPI will take certain steps to ensure that ASC Signal is operated as a competitively independent, economically viable, and ongoing business concern, which will remain independent and uninfluenced by CPI or its parent company, Odyssey Investment Partners Fund V, LP (''Odyssey''), and that competition is maintained during the pendency of the required divestiture.

The United States and Defendants have stipulated that the proposed Final Judgment may be entered after compliance with the APPA. Entry of the proposed Final Judgment will terminate this action, except that the Court will retain jurisdiction to construe, modify, or enforce the provisions of the proposed Final Judgment and to punish violations thereof.

II. Description of Events Giving Rise to the Alleged Violation

(A) The Defendants and the Proposed Transaction

Odyssey, a private equity fund managed by Odyssey Investment Partners, is a Delaware limited partnership with its headquarters in New York, New York. Odyssey Investment Partners has raised over $5 billion since its inception and invests in a wide array of industries, including aerospace and defense. CPI is a portfolio company of Odyssey. It is a Delaware corporation with its headquarters in Palo Alto, California. CPI is a global manufacturer of electronic components and subsystems focused primarily on communications and defense markets. CPI had sales of approximately $500 million in 2019 and sells satellite communication antennas through its subsidiary, ASC Signal, a business it acquired in 2017.

General Dynamics is a Delaware corporation with its headquarters in Reston, Virginia. General Dynamics's subsidiary, GD SATCOM, designs, manufactures, and sells satellite communications systems used in commercial, defense, and scientific applications and provides related products such as amplifiers and antennas. GD SATCOM earned between $200 million and $300 million in revenues in 2019.

Pursuant to a purchase agreement dated July 22, 2019, CPI intends to acquire GD SATCOM from General Dynamics for approximately $175 million.

(B) Industry Background

Satellite communications networks enable secure communications links in remote areas that lack access to the main telecommunications grid. For example, the Department of Defense (''DoD'') uses satellite communications networks to communicate with military bases in theaters of war, where access to the communications grid may be intermittent or even non-existent. Similarly, where it is too expensive to run traditional communications lines, commercial network operators provide satellite communications networks that individual users—or clusters of users in a central location—can use to access the internet, television, and voice communications services.

Both commercial and military satellite communications networks operate in the same way: Information is transmitted from a remote user through a satellite in orbit and back down through a ground station that is connected to a traditional communications grid. This process is reversed as information returns to the remote user. At both ends of the satellite communication link, there must be an antenna that can ''see'' the satellite(s) with which the ground stations are interfacing.

The satellite is the most critical, and expensive, element of a satellite communications network. Satellite-based design constraints, such as the power of the transmission signal (which is directly impacted by limitations on size and weight) and the orbit in which the satellite will operate, thus drive other significant design decisions for the entire satellite communications network.

The other key component of a satellite communications network is the ground station antenna, which connects the satellite to the communications grid. The ground station antenna consists of a parabolic dish, the structure on which the dish is mounted, and any motors or other equipment needed to move, or ''point,'' the dish at the satellite(s) in its network.

Several characteristics differentiate ground station antennas, but the two most important are the size of the antenna (which is typically measured by the diameter of its parabolic dish) and the ability of the antenna to track satellites that change their position relative to the Earth (as described below, some antennas remain pointed in the same direction while others track satellites as they cross the sky).

Antenna size is important because larger antennas can receive fainter signals (*i.e.,* signals impacted by rain, clouds, or other atmospheric conditions) than smaller antennas. As a result, satellite networks using larger antennas are more reliable than networks using smaller antennas. Additionally, because larger antennas can receive fainter signals, the power requirements for the transmitting satellite (which must be supplied through batteries and/or solar generation) are diminished as compared to transmission to smaller antennas. Satellites for larger antennas therefore need not be as large or expensive as satellites for smaller antennas. Larger antennas thus decrease the overall cost of the satellite communications system.

The other major factor differentiating between types of ground station antennas is their ability to track satellites that change their position relative to the Earth. For example, satellites in geostationary orbit remain in a fixed position relative to the Earth's rotation and are more than 20,000 miles above Earth. Antennas for geostationary satellites are therefore ''fixed'' and point in one direction. Low-earth orbit (''LEO'') and mid-earth orbit (''MEO'') satellites, by contrast, are multiple thousands of miles closer to earth and rotate the earth every 70 minutes. LEO and MEO satellites thus frequently ''cross'' the sky as they orbit and antennas used to communicate with them must be ''full-motion'' in order to track the LEO and MEO satellites as they move relative to the antennas' positions. While full motion antennas duplicate some of the capabilities of fixed antennas, they are typically only used for LEO and MEO satellites because they are significantly more expensive due to the motors and structural design elements necessary to ensure accurate full-motion pointing. Fixed antennas are thus more cost-effective than full-motion antennas.

(C) Relevant Markets

3. Product Market

For DoD customers, satellite communications networks provide vital communications links for the battlefield and other remote locations. For many uses, DoD requires large geostationary satellite antennas in order to guarantee reliable communications connections. DoD cannot switch to smaller geostationary antennas without compromising the reliability and usefulness of its network. Because switching to smaller geostationary antennas would effectively render a satellite communications network unfit for its intended use, the Complaint alleges that DoD is unlikely to switch to smaller geostationary antennas in response to a small but significant

increase in price for large geostationary satellite antennas.

According to the Complaint, commercial customers—whose reliability requirements are not as rigid as DoD's—are also unlikely to switch to smaller geostationary antennas in the event of a small but significant increase in price for large geostationary satellite antennas because, like DoD, doing so would decrease the reliability of their network. Further, switching to smaller geostationary antennas would require a satellite communications network with a larger—and significantly more expensive—satellite at its core, thus increasing the overall cost of the network.

Similarly, the Complaint alleges that DoD and commercial customers with geostationary satellites are unlikely to switch from fixed to full-motion antennas—like those used for MEO and LEO satellites—in response to a small but significant increase in price of fixed antennas. Even when full-motion antennas have similar capabilities to fixed antennas, they are significantly more expensive due to the additional motors and equipment necessary to ensure accurate full-motion pointing.

According to the Complaint, customers will not substitute to smaller or full-motion antennas in response to a small but significant and non-transitory increase in the price of large geostationary satellite antennas. Therefore, the Complaint alleges that the design, manufacture, and sale of large geostationary satellite antennas is a relevant product market and line of commerce under Section 7 of the Clayton Act, 15 U.S.C. 18.

4. Geographic Market

The Complaint alleges that the relevant geographic market for large geostationary satellite antennas is the United States. For national security reasons, DoD prefers domestic suppliers of large geostationary satellite antennas when it is deciding on potential antenna sources. Similarly, commercial customers prefer domestic suppliers of large geostationary satellite antennas, in part because they resell network access to DoD and other government customers that prefer to avoid having foreign suppliers for components in the transmission chain for sensitive national security-related information. For these reasons, neither DoD nor commercial customers are likely to turn to any foreign suppliers in the face of a small but significant and non-transitory price increase by domestic suppliers of large geostationary satellite antennas.

(D) Anticompetitive Effects of the Proposed Transaction

As alleged in the Complaint, CPI, through its subsidiary ASC Signal, and GD SATCOM are the only two significant suppliers that design, manufacture, and sell large geostationary satellite antennas in the United States. The merger would give the combined firm an effective monopoly, leaving customers, including DoD, without a meaningful competitive alternative for this critical component of satellite communications networks.

According to the Complaint, CPI and GD SATCOM compete for sales of large geostationary satellite antennas on the basis of quality, price, and contractual terms such as delivery times. This competition has resulted in higher quality, lower prices, and shorter delivery times. The combination of CPI and GD SATCOM would eliminate this competition and its future benefits to customers, including DoD. Post-acquisition, the merged firm likely would have the incentive and ability to increase prices and offer less favorable contractual terms.

As described in the Complaint, competition between CPI and GD SATCOM has also fostered important industry innovation, leading to antennas that are more durable, can withstand more extreme environments, and operate at higher bandwidths. The combination of CPI and GD SATCOM would eliminate this competition and its future benefits to customers, including DoD. Post-acquisition, the merged firm likely would have less incentive to engage in research and development efforts that lead to innovative and high-quality products.

(E) Entry

According to the Complaint, entry of additional competitors into the market for the design, manufacture, and sale of large geostationary satellite antennas in the United States is unlikely to prevent the harm to competition that is likely to result if the proposed acquisition is consummated. Production facilities for large geostationary satellite antennas require a substantial investment in both capital equipment and human resources. A new entrant would need to set up a factory to produce parabolic dishes, design the complex electronic assemblies and components necessary to point the antenna, and build assembly lines and testing facilities. Engineering and research personnel would need to be assigned to design, test, and troubleshoot the complex manufacturing process that is necessary to produce large geostationary satellite antennas. Any new products manufactured by such an entrant would also require extensive testing and qualification before they could be used by the U.S. military. As a result, the Complaint alleges that entry would be costly and time-consuming.

III. Explanation of the Proposed Final Judgment

The divestiture required by the proposed Final Judgment will remedy the loss of competition alleged in the Complaint by establishing an independent and economically viable competitor in the design, manufacture, and sale of large geostationary satellite antennas. Paragraph IV(A) of the proposed Final Judgment requires CPI, within the later of 60 calendar days after the entry of the Stipulation and Order by the Court or 30 calendar days after all regulatory approvals needed to complete the transaction and divestiture have been received, to divest the Divestiture Assets. The assets must be divested in such a way as to satisfy the United States in its sole discretion that they can and will be operated by the purchaser as a viable, ongoing business that can compete effectively in the design, manufacture, and sale of large geostationary satellite antennas. The regulatory approvals are defined in Paragraph II(J) of the proposed Final Judgment and include approvals or clearances pursuant to filings with the Committee on Foreign Investment in the United States (''CFIUS'') or under antitrust or competition laws required for CPI's acquisition of GD SATCOM and approvals or clearances pursuant to filings with CFIUS or under antitrust, competition, or other U.S. or international laws or regulations required for the divestiture of the Divestiture Assets. The Divestiture Assets are defined as ASC Signal, and include four facilities (a support facility in Plano, Texas, a manufacturing facility located in Whitby, Ontario, and testing facilities located in Ashburn, Ontario and Caddo Mills, Texas) and all tangible and intangible assets related to or used in connection with the ASC Signal. CPI must take all reasonable steps necessary to accomplish the divestiture quickly and must cooperate with prospective purchasers.

The proposed Final Judgment also contains provisions intended to facilitate the acquirer's efforts to hire employees supporting ASC Signal. Paragraph IV(C) of the proposed Final Judgment requires CPI to provide the acquirer and the United States with organization charts and information relating to these employees and to make them available for interviews, and it

provides that the Defendants must not interfere with any negotiations by the acquirer to hire them. In addition, for employees who elect employment with the acquirer, CPI must waive all non-compete and non-disclosure agreements, vest all unvested pension and other equity rights, and provide all benefits that the employees would generally be provided if transferred to a buyer of an ongoing business. This paragraph further provides that the Defendants may not solicit to hire any employee of the Divestiture Assets who was hired by the acquirer, unless that individual is terminated or laid off by the acquirer or the acquirer agrees in writing that the Defendants may solicit to hire that individual. The non-solicitation period runs for 12 months from the date of the divestiture.

Paragraph IV(H) of the proposed Final Judgment requires CPI, at the acquirer's option, to enter into a transition services agreement for back office, human resource, and information technology services and support for ASC Signal for a period of up to 12 months. The paragraph further provides that the United States, in its sole discretion, may approve one or more extensions of this transition services agreement for a total of up to an additional six months. Paragraph IV(H) also provides that employees of CPI tasked with providing any transition services must not share any competitively sensitive information of the acquirer with any other employee of Defendants.

Paragraph IV(G) of the proposed Final Judgment facilitates the transfer of customers and other contractual relationships from CPI to the acquirer. CPI must transfer all contracts, agreements, and relationships to the acquirer and must make best efforts to assign, subcontract, or otherwise transfer contracts or agreements that require the consent of another party before assignment, subcontracting or other transfer.

If CPI does not accomplish the divestiture within the period prescribed in the proposed Final Judgment, Section V of the proposed Final Judgment provides that the Court will appoint a divestiture trustee selected by the United States to effect the divestiture. If a divestiture trustee is appointed, the proposed Final Judgment provides that CPI will pay all costs and expenses of the trustee. The divestiture trustee's commission will be structured so as to provide an incentive for the trustee based on the price obtained and the speed with which the divestiture is accomplished. After the divestiture trustee's appointment becomes effective, the trustee will provide periodic reports to the United States setting forth his or her efforts to accomplish the divestiture. At the end of six months, if the divestiture has not been accomplished, the divestiture trustee and the United States will make recommendations to the Court, which will enter such orders as appropriate, in order to carry out the purpose of the trust, including by extending the trust or the term of the divestiture trustee's appointment.

Section XI of the proposed Final Judgment requires Odyssey and CPI to notify the United States in advance of acquiring an entity involved in the design, manufacture, and sale of large ground station antennas for geostationary satellites in the United States in a transaction that would not otherwise be reportable under the Hart-Scott-Rodino Antitrust Improvements Act of 1976, as amended, 15 U.S.C. 18a (the ''HSR Act''). The proposed Final Judgment further provides for waiting periods and opportunities for the United States to obtain additional information analogous to the provisions of the HSR Act. Because CPI and GD Satcom are the only two significant suppliers of these products in the United States, it is important for the Division to receive notice of even small transactions that have the potential to eliminate competition in this market through the acquisition of an important startup or new entrant. Requiring notification of any acquisition of an entity involved in the design, manufacture, and sale of large ground station antennas for geostationary satellites in the United States will permit the United States to assess the competitive effects of that acquisition before it is consummated and, if necessary, seek to enjoin the transaction.

The proposed Final Judgment also contains provisions designed to promote compliance and make the enforcement of the Final Judgment as effective as possible. Paragraph XIV(A) provides that the United States retains and reserves all rights to enforce the provisions of the Final Judgment, including its rights to seek an order of contempt from the Court. Under the terms of this paragraph, Defendants have agreed that in any civil contempt action, any motion to show cause, or any similar action brought by the United States regarding an alleged violation of the Final Judgment, the United States may establish the violation and the appropriateness of any remedy by a preponderance of the evidence and that Defendants have waived any argument that a different standard of proof should apply. This provision aligns the standard for compliance obligations with the standard of proof that applies to the underlying offense that the compliance commitments address.

Paragraph XIV(B) provides additional clarification regarding the interpretation of the provisions of the proposed Final Judgment. The proposed Final Judgment is intended to restore competition the United States alleges would otherwise be harmed by the transaction. Defendants agree that they will abide by the proposed Final Judgment, and that they may be held in contempt of this Court for failing to comply with any provision of the proposed Final Judgment that is stated specifically and in reasonable detail, as interpreted in light of this procompetitive purpose.

Paragraph XIV(C) of the proposed Final Judgment provides that if the Court finds in an enforcement proceeding that Defendants have violated the Final Judgment, the United States may apply to the Court for a one-time extension of the Final Judgment, together with such other relief as may be appropriate. In addition, to compensate American taxpayers for any costs associated with investigating and enforcing violations of the Final Judgment, Paragraph XIV(C) provides that in any successful effort by the United States to enforce the Final Judgment against a Defendant, whether litigated or resolved before litigation, that Defendant will reimburse the United States for attorneys' fees, experts' fees, and other costs incurred in connection with any enforcement effort, including the investigation of the potential violation.

Paragraph XIV(D) states that the United States may file an action against a Defendant for violating the Final Judgment for up to four years after the Final Judgment has expired or been terminated. This provision is meant to address circumstances such as when evidence that a violation of the Final Judgment occurred during the term of the Final Judgment is not discovered until after the Final Judgment has expired or been terminated or when there is not sufficient time for the United States to complete an investigation of an alleged violation until after the Final Judgment has expired or been terminated. This provision, therefore, makes clear that, for four years after the Final Judgment has expired or been terminated, the United States may still challenge a violation that occurred during the term of the Final Judgment.

Finally, Section XV of the proposed Final Judgment provides that the Final Judgment will expire ten years from the date of its entry, except that after five years from the date of its entry, the Final Judgment may be terminated upon

notice by the United States to the Court and Defendants that the divestiture has been completed and that the continuation of the Final Judgment is no longer necessary or in the public interest.

IV. Remedies Available to Potential Private Litigants

Section 4 of the Clayton Act, 15 U.S.C. 15, provides that any person who has been injured as a result of conduct prohibited by the antitrust laws may bring suit in federal court to recover three times the damages the person has suffered, as well as costs and reasonable attorneys' fees. Entry of the proposed Final Judgment neither impairs nor assists the bringing of any private antitrust damage action. Under the provisions of Section 5(a) of the Clayton Act, 15 U.S.C. 16(a), the proposed Final Judgment has no prima facie effect in any subsequent private lawsuit that may be brought against Defendants.

V. Procedures Available for Modification of the Proposed Final Judgment

The United States and Defendants have stipulated that the proposed Final Judgment may be entered by the Court after compliance with the provisions of the APPA, provided that the United States has not withdrawn its consent. The APPA conditions entry upon the Court's determination that the proposed Final Judgment is in the public interest.

The APPA provides a period of at least 60 days preceding the effective date of the proposed Final Judgment within which any person may submit to the United States written comments regarding the proposed Final Judgment. Any person who wishes to comment should do so within 60 days of the date of publication of this Competitive Impact Statement in the **Federal Register**, or the last date of publication in a newspaper of the summary of this Competitive Impact Statement, whichever is later. All comments received during this period will be considered by the U.S. Department of Justice, which remains free to withdraw its consent to the proposed Final Judgment at any time before the Court's entry of the Final Judgment. The comments and the response of the United States will be filed with the Court. In addition, comments will be posted on the U.S. Department of Justice, Antitrust Division's internet website and, under certain circumstances, published in the **Federal Register**.

Written comments should be submitted to: Katrina Rouse, Chief, Defense, Industrials, and Aerospace Section, Antitrust Division, U.S. Department of Justice, 450 Fifth Street, NW, Suite 8700, Washington, DC 20530.

The proposed Final Judgment provides that the Court retains jurisdiction over this action, and the parties may apply to the Court for any order necessary or appropriate for the modification, interpretation, or enforcement of the Final Judgment.

VI. Alternatives to the Proposed Final Judgment

As an alternative to the proposed Final Judgment, the United States considered a full trial on the merits against Defendants. The United States could have continued the litigation and sought preliminary and permanent injunctions against CPI's acquisition of GD SATCOM. The United States is satisfied, however, that the divestiture of assets described in the proposed Final Judgment will remedy the anticompetitive effects alleged in the Complaint, preserving competition for the design, manufacture, and sale of large geostationary satellite antennas. Thus, the proposed Final Judgment achieves all or substantially all of the relief the United States would have obtained through litigation, but avoids the time, expense, and uncertainty of a full trial on the merits of the Complaint.

VII. Standard of Review Under the APPA for the Proposed Final Judgment

The Clayton Act, as amended by the APPA, requires that proposed consent judgments in antitrust cases brought by the United States be subject to a 60-day comment period, after which the Court shall determine whether entry of the proposed Final Judgment ''is in the public interest.'' 15 U.S.C. 16(e)(1). In making that determination, the Court, in accordance with the statute as amended in 2004, is required to consider:

> (A) The competitive impact of such judgment, including termination of alleged violations, provisions for enforcement and modification, duration of relief sought, anticipated effects of alternative remedies actually considered, whether its terms are ambiguous, and any other competitive considerations bearing upon the adequacy of such judgment that the court deems necessary to a determination of whether the consent judgment is in the public interest; and
>
> (B) the impact of entry of such judgment upon competition in the relevant market or markets, upon the public generally and individuals alleging specific injury from the violations set forth in the complaint including consideration of the public benefit, if any, to be derived from a determination of the issues at trial.

15 U.S.C. 16(e)(1)(A) & (B). In considering these statutory factors, the Court's inquiry is necessarily a limited one as the government is entitled to ''broad discretion to settle with the defendant within the reaches of the public interest.'' *United States* v. *Microsoft Corp.,* 56 F.3d 1448, 1461 (D.C. Cir. 1995); *United States* v. *U.S. Airways Grp., Inc.,* 38 F. Supp. 3d 69, 75 (D.D.C. 2014) (explaining that the ''court's inquiry is limited'' in Tunney Act settlements); *United States* v. *InBev N.V./S.A.,* No. 08–1965 (JR), 2009 U.S. Dist. LEXIS 84787, at *3 (D.D.C. Aug. 11, 2009) (noting that a court's review of a consent judgment is limited and only inquires ''into whether the government's determination that the proposed remedies will cure the antitrust violations alleged in the complaint was reasonable, and whether the mechanism to enforce the final judgment are clear and manageable'').

As the U.S. Court of Appeals for the District of Columbia Circuit has held, under the APPA a court considers, among other things, the relationship between the remedy secured and the specific allegations in the government's complaint, whether the proposed Final Judgment is sufficiently clear, whether its enforcement mechanisms are sufficient, and whether it may positively harm third parties. *See Microsoft,* 56 F.3d at 1458–62. With respect to the adequacy of the relief secured by the proposed Final Judgment, a court may not ''make de novo determination of facts and issues.'' *United States* v. *W. Elec. Co.,* 993 F.2d 1572, 1577 (D.C. Cir. 1993) (quotation marks omitted); *see also Microsoft,* 56 F.3d at 1460–62; *United States* v. *Alcoa, Inc.,* 152 F. Supp. 2d 37, 40 (D.D.C. 2001); *United States* v. *Enova Corp.,* 107 F. Supp. 2d 10, 16 (D.D.C. 2000); *InBev,* 2009 U.S. Dist. LEXIS 84787, at *3. Instead, ''[t]he balancing of competing social and political interests affected by a proposed antitrust consent decree must be left, in the first instance, to the discretion of the Attorney General.'' *W. Elec. Co.,* 993 F.2d at 1577 (quotation marks omitted). ''The court should bear in mind the *flexibility* of the public interest inquiry: the court's function is not to determine whether the resulting array of rights and liabilities is one that will *best* serve society, but only to confirm that the resulting settlement is within the *reaches* of the public interest.'' *Microsoft,* 56 F.3d at 1460 (quotation marks omitted); *see also United States* v. *Deutsche Telekom AG,* No. 19–2232 (TJK), 2020 WL 1873555, at *7 (D.D.C. Apr. 14, 2020). More demanding requirements would ''have enormous practical consequences for the government's ability to negotiate future

settlements,'' contrary to congressional intent. *Id.* at 1456. ''The Tunney Act was not intended to create a disincentive to the use of the consent decree.'' *Id.*

The United States' predictions about the efficacy of the remedy are to be afforded deference by the Court. *See, e.g., Microsoft,* 56 F.3d at 1461 (recognizing courts should give ''due respect to the Justice Department's . . . view of the nature of its case''); *United States* v. *Iron Mountain, Inc.,* 217 F. Supp. 3d 146, 152–53 (D.D.C. 2016) (''In evaluating objections to settlement agreements under the Tunney Act, a court must be mindful that [t]he government need not prove that the settlements will perfectly remedy the alleged antitrust harms[;] it need only provide a factual basis for concluding that the settlements are reasonably adequate remedies for the alleged harms.'') (internal citations omitted); *United States* v. *Republic Servs., Inc.,* 723 F. Supp. 2d 157, 160 (D.D.C. 2010) (noting ''the deferential review to which the government's proposed remedy is accorded''); *United States* v. *Archer-Daniels-Midland Co.,* 272 F. Supp. 2d 1, 6 (D.D.C. 2003) (''A district court must accord due respect to the government's prediction as to the effect of proposed remedies, its perception of the market structure, and its view of the nature of the case.''). The ultimate question is whether ''the remedies [obtained by the Final Judgment are] so inconsonant with the allegations charged as to fall outside of the 'reaches of the public interest.' '' *Microsoft,* 56 F.3d at 1461 (*quoting W. Elec. Co.,* 900 F.2d at 309).

Moreover, the Court's role under the APPA is limited to reviewing the remedy in relationship to the violations that the United States has alleged in its complaint, and does not authorize the Court to ''construct [its] own hypothetical case and then evaluate the decree against that case.'' *Microsoft,* 56 F.3d at 1459; *see also U.S. Airways,* 38 F. Supp. 3d at 75 (noting that the court must simply determine whether there is a factual foundation for the government's decisions such that its conclusions regarding the proposed settlements are reasonable); *InBev,* 2009 U.S. Dist. LEXIS 84787, at *20 (''[T]he 'public interest' is not to be measured by comparing the violations alleged in the complaint against those the court believes could have, or even should have, been alleged''). Because the ''court's authority to review the decree depends entirely on the government's exercising its prosecutorial discretion by bringing a case in the first place,'' it follows that ''the court is only authorized to review the decree itself,'' and not to ''effectively redraft the complaint'' to inquire into other matters that the United States did not pursue. *Microsoft,* 56 F.3d at 1459–60.

In its 2004 amendments to the APPA, Congress made clear its intent to preserve the practical benefits of using consent judgments proposed by the United States in antitrust enforcement, Public Law 108–237 § 221, and added the unambiguous instruction that ''[n]othing in this section shall be construed to require the court to conduct an evidentiary hearing or to require the court to permit anyone to intervene.'' 15 U.S.C. 16(e)(2); *see also U.S. Airways,* 38 F. Supp. 3d at 76 (indicating that a court is not required to hold an evidentiary hearing or to permit intervenors as part of its review under the Tunney Act). This language explicitly wrote into the statute what Congress intended when it first enacted the Tunney Act in 1974. As Senator Tunney explained: ''[t]he court is nowhere compelled to go to trial or to engage in extended proceedings which might have the effect of vitiating the benefits of prompt and less costly settlement through the consent decree process.'' 119 Cong. Rec. 24,598 (1973) (statement of Sen. Tunney). ''A court can make its public interest determination based on the competitive impact statement and response to public comments alone.'' *U.S. Airways,* 38 F. Supp. 3d at 76 (citing *Enova Corp.,* 107 F. Supp. 2d at 17).

VIII. Determinative Documents

There are no determinative materials or documents within the meaning of the APPA that were considered by the United States in formulating the proposed Final Judgment.

Dated: May 28, 2020

Respectfully submitted,

Jay D. Owen,
Assistant Chief.
Defense, Industrials, and Aerospace Section, Antitrust Division, U.S. Department of Justice, 450 Fifth St. NW, Suite 8700, Washington, DC 205, Telephone (202) 598–2987, Facsimile (202) 514–9033, jay.owen@usdoj.gov.

[FR Doc. 2020–12289 Filed 6–5–20; 8:45 am]

BILLING CODE 4410–11–P

DEPARTMENT OF JUSTICE

Antitrust Division

Notice Pursuant to the National Cooperative Research and Production Act of 1993—Petroleum Environmental Research Forum

Notice is hereby given that, on May 13, 2020, pursuant to Section 6(a) of the National Cooperative Research and Production Act of 1993, 15 U.S.C. 4301 *et seq.* (''the Act''), Petroleum Environmental Research Forum (''PERF'') has filed written notifications simultaneously the Attorney General and the Federal Trade Commission disclosing changes in its membership. The notifications were filed for the purpose of extending the Act's provisions limiting the recovery of antitrust plaintiffs to actual damages under specified circumstances. Specifically, Suncor Energy Inc. and Tullow Oil Plc have withdrawn as parties to this venture.

No other changes have been made in either the membership or planned activity of the group research project. Membership in this group research project remains open, and PERF intends to file additional written notifications disclosing all changes in membership.

On February 10, 1986, PERF filed its original notification pursuant to Section 6(a) of the Act. The Department of Justice published a notice in the **Federal Register** pursuant to Section 6(b) of the Act on March 14, 1986 (51 FR 8903).

The last notification was filed with the Department on February 22, 2019. A notice was published in the **Federal Register** pursuant to Section 6(h) of the Act on March 08, 2019 (84 FR 8545).

Suzanne Morris,

Chief, Premerger and Division Statistics, Antitrust Division.

[FR Doc. 2020–12305 Filed 6–5–20; 8:45 am]

BILLING CODE 4410–11–P

DEPARTMENT OF JUSTICE

Antitrust Division

Notice Pursuant to the National Cooperative Research and Production Act of 1993—Automotive Cybersecurity Industry Consortium

Notice is hereby given that, on May 29, 2020, pursuant to Section 6(a) of the National Cooperative Research and Production Act of 1993, 15 U.S.C. 4301 *et seq.* (''the Act''), Automotive Cybersecurity Industry Consortium (''ACIC'') has filed written notifications simultaneously with the Attorney General and the Federal Trade

Commission disclosing changes in its membership. The notifications were filed for the purpose of extending the Act's provisions limiting the recovery of antitrust plaintiffs to actual damages under specified circumstances. Specifically, General Motors, LLC, Detroit, MI and Mazda Motor of America, Inc., Irvine, CA have withdrawn as parties to this venture.

No other changes have been made in either the membership or planned activity of the group research project. Membership in this group research project remains open, and ACIC intends to file additional written notifications disclosing all changes in membership.

On January 11, 2017, ACIC filed its original notification pursuant to Section 6(a) of the Act. The Department of Justice published a notice in the **Federal Register** pursuant to Section 6(b) of the Act on February 27, 2017 (82 FR 11942).

The last notification was filed with the Department on August 23, 2017. A notice was published in the **Federal Register** pursuant to Section 6(b) of the Act on September 29, 2017 (82 FR 45611).

Suzanne Morris,

Chief, Premerger and Division Statistics, Antitrust Division.

[FR Doc. 2020–12295 Filed 6–5–20; 8:45 am]

BILLING CODE 4410–11–P

DEPARTMENT OF JUSTICE

Antitrust Division

Notice Pursuant to the National Cooperative Research and Production Act of 1993—Border Security Technology Consortium

Notice is hereby given that, on May 19, 2020, pursuant to Section 6(a) of the National Cooperative Research and Production Act of 1993, 15 U.S.C. 4301 *et seq.* (''the Act''), Border Security Technology Consortium (''BSTC'') has filed written notifications simultaneously with the Attorney General and the Federal Trade Commission disclosing changes in its membership. The notifications were filed for the purpose of extending the Act's provisions limiting the recovery of antitrust plaintiffs to actual damages under specified circumstances. Specifically, Syzygy Integration LLC, Philadelphia, PA; Rafael System Global Sustainment, LLC, Bethesda, MD; and Tsymmetry, Inc., Washington, DC have been added as parties to this venture.

Also, Garud Technology Services, Inc., Ellicott City, MD; Megaray LLC, New York, NY; Intel Corporation, Santa Clara, CA; TigerSwan, Inc., Apex, NC; Advanced Detection Technology, LLC, Mooresville, NC; Surface Optics Corporation, San Diego, CA; SecureInsights, LLC, Washington, DC; Synapse Technology Corporation, Palo Alto, CA; Rigaku Analytical Devices, Inc., Wilmington, DE; Tyto Athene, LLC, Herndon, VA; BlackSky Geospatial Solutions, Inc., Herndon, VA; Solute, Inc., San Diego, CA; TCOM, LP, Columbia, MD; Michael Baker Jr., Inc., Phoenix, AZ; Commdex Consulting, LLC, Norcorss, GA; Unmanned Solutions Technology, LLC, Beavercreek, OH; Irvine Sensors Corporation, Costa Mesa, CA; and ITI Solutions, Inc., San Antonio, TX have withdrawn as a party to this venture.

No other changes have been made in either the membership or planned activity of the group research project. Membership in this group research project remains open, and BSTC intends to file additional written notifications disclosing all changes in membership.

On May 30, 2012, BSTC filed its original notification pursuant to Section 6(a) of the Act. The Department of Justice published a notice in the **Federal Register** pursuant to Section 6(b) of the Act on June 18, 2012 (77 FR 36292).

The last notification was filed with the Department on January 23, 2020. A notice was published in the **Federal Register** pursuant to section 6(b) of the Act on February 27, 2020 (85 FR 11396).

Suzanne Morris,

Chief, Premerger and Division Statistics, Antitrust Division.

[FR Doc. 2020–12306 Filed 6–5–20; 8:45 am]

BILLING CODE 4410–11–P

DEPARTMENT OF JUSTICE

Antitrust Division

Notice Pursuant to the National Cooperative Research and Production Act of 1993—DVD Copy Control Association

Notice is hereby given that, on May 27, 2020, pursuant to Section 6(a) of the National Cooperative Research and Production Act of 1993, 15 U.S.C. 4301 *et seq.* (''the Act''), DVD Copy Control Association (''DVD CCA'') has filed written notifications simultaneously with the Attorney General and the Federal Trade Commission disclosing changes in its membership. The notifications were filed for the purpose of extending the Act's provisions limiting the recovery of antitrust plaintiffs to actual damages under specified circumstances. Specifically, Ultra Source Trading Hong Kong Limited, New Territories, HONG KONG SAR, has been added as a party to this venture.

Also, Visteon Corporation, Van Buren Charter Township, MI; Guangdong Creator & FlyAudio Ele & Tech Co., Ltd., Dongguan, PEOPLE'S REPUBLIC OF CHINA; Lear Corporation, Detroit, MI; IMAGICA Lab Inc., Tokyo, JAPAN; Skypine Electronics (Shenzhen) Co., Ltd., Shenzhen City, PEOPLE'S REPUBLIC OF CHINA; and Shanghai Epic Music Manufacturing Operations, Shanghai, PEOPLE'S REPUBLIC OF CHINA, have withdrawn as parties to this venture.

No other changes have been made in either the membership or planned activity of the group research project. Membership in this group research project remains open, and DVD CCA intends to file additional written notifications disclosing all changes in membership.

On April 11, 2001, DVD CCA filed its original notification pursuant to Section 6(a) of the Act. The Department of Justice published a notice in the **Federal Register** pursuant to Section 6(b) of the Act on August 3, 2001 (66 FR 40727).

The last notification was filed with the Department on December 26, 2019. A notice was published in the **Federal Register** pursuant to Section 6(b) of the Act on January 27, 2020 (85 FR 4705).

Suzanne Morris,

Chief, Premerger and Division Statistics, Antitrust Division.

[FR Doc. 2020–12303 Filed 6–5–20; 8:45 am]

BILLING CODE 4410–11–P

NATIONAL ARCHIVES AND RECORDS ADMINISTRATION

[NARA–2020–0046]

Public Interest Declassification Board; Revised Bylaws

AGENCY: Information Security Oversight Office, National Archives and Records Administration.

ACTION: Notice of revised Public Interest Declassification Board Bylaws.

SUMMARY: We are announcing revisions to the Bylaws of the Public Interest Declassification Board (PIDB). The members of the PIDB approved these revised Bylaws and we are publishing them with this notice, in accordance with requirements in the Bylaws. You may also find the Bylaws on the PIDB website.

DATES: The revised Bylaws are effective as of June 1, 2020.

ADDRESSES: You can see these Bylaws, as well as additional information about

the PIDB, at the PIDB website at *https://www.archives.gov/declassification/pidb.*

FOR FURTHER INFORMATION CONTACT: John C. Powers, Associate Director, Classification Management, at the Information Security Oversight Office, by phone at 202.357.5183 or by email at *pidb@nara.gov.*

SUPPLEMENTARY INFORMATION: The PIDB is an executive branch board that advises and makes recommendations to the President and other executive branch officials on matters related to classifying and declassifying national security information, as authorized by Public Law 106–567, as amended, 50 U.S.C.A. § 3355a (Pub. L. 116–92, December 20, 2019). The PIDB Bylaws were previously last revised on May 30, 2007, and published in the **Federal Register** on June 25, 2007. The Board's members approved the current revisions to the Bylaws unanimously in a 5–0 vote with an effective date of June 1, 2020. The revisions include the following changes: Adding the requirement that the Board meet at least quarterly in person, as provided in Public Law 116–92, unless otherwise prevented by public health or other emergencies; clarifying what constitutes a quorum for the Board to be authorized to meet; a provision concerning continuity of the Board in the event the Board has fewer than three members appointed; adjusting the decision-making process for declassification recommendations to the President to account for possible additional vacancies on the Board; clarifying a provision concerning the number of votes required to approve amendments to the Bylaws; and several minor administrative changes.

PIDB Bylaws

(June 1, 2020)

Article I. Purpose

The purpose of the Public Interest Declassification Board (the Board) and these bylaws is to fulfill the functions assigned to the Board by statute.

Article II. Authority

Public Interest Declassification Act of 2000 (the Act, Pub. L. 106–567, December 27, 2000), as amended, 50 U.S.C.A. § 3355a (Pub. L. 116–92, December 20, 2019), and subsequent amendments or successor authorities.

Article III. Membership

A. *Membership.* Appointments under section 703(c) of the Act establish the membership of the Board.

B. *Chairperson.* As provided in section 703(d) of the Act, the President shall select the Chairperson from among the members.

C. *Vice Chairperson.* The members may elect from among the members a Vice Chairperson who shall:

1. Chair meetings that the Chairperson is unable to attend; and

2. Serve as Acting Chairperson during a vacancy in the Chairperson of the Board.

D. *Continuity.* During any period in which the Board has fewer than three current members appointed, the Executive Secretary shall continue the Board's operations, in coordination with current members, even though the Board may not convene formal meetings as described in Article IV below during such time. This may include responding to basic requests that do not require a vote under Articles V and VIII below, holding informal discussions with the members, and maintaining or generating records and reports.

Article IV. Meetings

A. *Purpose.* The primary purpose of Board meetings is to discuss and bring formal resolution to matters before the Board.

B. *Frequency.* The Board shall meet at the call of the Chairperson, who shall schedule meetings at least quarterly and in person, as provided in section 703(e) of the Act, as amended (unless otherwise prevented by public health or other emergencies), and as may be necessary for the Board to fulfill its functions in a timely manner. The Chairperson shall also convene the Board when requested by a majority of its members.

C. *Quorum.* Meetings of the Board may be held only when a quorum is present. As provided for in section 703(e) of the Act, a quorum requires the presence of at least a majority of the current members of the Board and shall not be fewer than three members. If there are fewer than three members currently appointed at any time, the Board may not convene a meeting, but may have informal discussions of administrative matters.

D. *Attendance.* To the greatest extent feasible, meetings of the board will be open to the public. In those instances where the Board finds it necessary to conduct business at a closed meeting, attendance at meetings of the Board shall be limited to those people necessary for the Board to fulfill its functions in a complete and timely manner, as determined by the Chairperson.

E. *Agenda.* The Chairperson shall establish the agenda for all meetings. Potential items for the agenda may be submitted to the Chairperson by any member or the Executive Secretary. Acting through the Executive Secretary, the Chairperson will distribute the agenda and supporting materials to the members as far in advance as possible before a scheduled meeting. The agendas shall be posted on the Board's website unless specified by the Chairperson and agreed to by a majority of the members.

F. *Summaries.* The Executive Secretary shall be responsible for preparing the summary of each meeting and distributing it to each member. The summaries will include a record of the members present at the meeting and the result of each vote. The summaries will be maintained among the records of the Board.

Article V. Voting

A. *Motions.* When the Board must make a decision or recommendation to resolve a matter before it, the Chairperson shall request or accept a motion for a vote. Any member, including the Chairperson, may make a motion for a vote. No second shall be required to bring any motion to a vote. A quorum must be present when a vote is taken.

B. *Eligibility.* Only the members, including the Chairperson, may vote on a motion before the Board.

C. *Voting procedures.* Votes shall ordinarily be taken and tabulated by a show of hands, or other similar method that can be used to record each member's vote.

D. *Passing a motion.* In response to a motion, members may vote affirmatively, negatively, or abstain from voting. Except as otherwise provided in these bylaws, a motion passes when a majority of the members present vote in the affirmative.

E. *Votes in a non-meeting context.* The Chairperson may call for a vote of the membership outside the context of a formal Board meeting. The Executive Secretary shall record and retain such votes in a documentary form and immediately report the results to the Chairperson and other members.

Article VI. Support Staff

As provided in section 703(d)(2) of the Act, the Director of the Information Security Oversight Office will serve as Executive Secretary to the Board, and, in accordance with section 703(j) of the Act, the staff of the Information Security Oversight Office will provide program and administrative support for the Board. The Executive Secretary will supervise the staff in this function pursuant to the direction of the Chairperson and Board. On an as needed basis and in accordance with

section 703(f) of the Act, the Board may seek detailees from departments and agencies to augment the staff of the Information Security Oversight Office in support of the Board.

Article VII. Records

A. *Integrity of Board records.* The Executive Secretary shall maintain separately documentary materials, regardless of their physical form or characteristics, that are produced by or presented to the Board or its staff in the performance of the Board's functions, consistent with applicable Federal law.

B. *Referrals.* Any Freedom of Information Act request or other access request for a record that originated within an agency other than the Board shall be referred to that agency for review.

Article VIII. Procedures for Handling Congressional Requests To Declassify Certain Records or Congressional Requests To Review Declinations To Declassify Specific Records and Making Recommendations to the President

A. *Purpose.* This Article sets forth the procedures for considering a proper request under the Act from a committee of jurisdiction in the Congress for the Board to make a recommendation to the President regarding the declassification of certain records.

B. *Narrowing requests.* To expedite the resolution of requests, and under the direction of the Chairperson, the Executive Secretary is authorized to consult with the requesting committee to narrow or prioritize the scope of the request.

C. *Standards for decision.* A recommendation to declassify a record in whole or in part requires that the Board determine, after careful consideration of the views of the original classifying authority, that declassification is in the public interest. A decision to recommend declassification in whole or in part requires that a majority of the members present vote in the affirmative, except when there are only three members present, in which case all three must vote in the affirmative.

D. *Resolving requests.* The Board may recommend that the President: (1) Take no action pursuant to the request; (2) declassify the record(s) in whole or in part pursuant to action taken in accordance with paragraph C; or (3) remand the matter to the agency responsible for the record(s) for further consideration and a timely response to the Board.

E. *Notification.* The Chairperson shall promptly convey to the President, through the Assistant to the President for National Security Affairs, and to the agency head responsible for the record(s), the Board's recommendation, including a written justification for its recommendation.

F. *Protecting classified information.* Any classified information gathered to evaluate a request shall be handled and protected in accordance with Executive Order 13526, Classified National Security Information, or subsequent executive order. Information that is subject to a request for declassification under this section shall remain classified unless and until a final decision is made by the President, or by the agency head responsible for the record(s), to declassify it. Decisions to release declassified information rest with the responsible agency rather than the Board.

G. *Maintaining records.* The Executive Secretary shall maintain a file of each request among the records of the Board.

Article IX. Annual Reports to Congress

As provided in section 706(e) of the Act, pertinent information and data about the activities of the Board shall be included in the report to the appropriate congressional committees. The Chairperson, in coordination with the other members of the Board and the Executive Secretary, shall determine what information to include in each Report.

Article X. Approval, Amendment, and Publication of Bylaws

The approval and amendment of these bylaws shall require that a majority of the members present vote in the affirmative, except when there are only three members present, in which case all three must vote in the affirmative. The Executive Secretary shall submit the approved bylaws and their amendments for publication in the **Federal Register**.

Kimberly Keravuori,

NARA Federal Register Liaison.

[FR Doc. 2020–12364 Filed 6–5–20; 8:45 am]

BILLING CODE 7515–01–P

NATIONAL ARCHIVES AND RECORDS ADMINISTRATION

[NARA–2020–0045]

Freedom of Information Act (FOIA) Advisory Committee; Solicitation for Committee Member Nominations

AGENCY: Office of Government Information Services (OGIS), National Archives and Records Administration (NARA).

ACTION: Notice.

SUMMARY: The National Archives and Records Administration (NARA) seeks member nominations for the Freedom of Information Act (FOIA) Advisory Committee (Committee).

DATES: We must receive nominations for Committee membership no later than 5:00 p.m. EDT on Thursday, July 2, 2020.

ADDRESSES: Email nominations to OGIS at *foia-advisory-committee@nara.gov.* We cannot accept submissions by mail or delivery during this time period because the building is closed due to COVID–19 restrictions. If you are unable to submit by email, please contact Kirstin Mitchell at the contact information below.

FOR FURTHER INFORMATION CONTACT: Kirsten Mitchell by phone at 202.741.5775 or by email at *foia-advisory-committee@nara.gov.*

SUPPLEMENTARY INFORMATION:

I. Background

The National Archives and Records Administration (NARA) established the Freedom of Information Act (FOIA) Advisory Committee in accordance with the United States Second Open Government National Action Plan, released on December 5, 2013, and operates under the directive in FOIA, 5 U.S.C. 552(h)(2)(C), that the Office of Government Information Services (OGIS) within NARA ''identify procedures and methods for improving compliance'' with FOIA. The Committee is governed by the provisions of the Federal Advisory Committee Act, as amended, 5 U.S.C. App.

II. Charter and Membership Appointment Terms

NARA initially chartered the Committee on May 20, 2014. The Archivist of the United States renewed the Committee's charter for a fourth term in May 2020 and certifies that renewing the Committee is in the public interest. Member appointment terms run for two years, concurrent with the Committee charter.

III. Committee Membership

The 2020–2022 FOIA Advisory Committee will consist of no more than 20 individuals who will include a range of Government and non-Government representatives. Members are selected in accordance with the charter.

Government members will include, at a minimum: Three FOIA professionals from Cabinet-level Departments; three FOIA professionals from non-Cabinet agencies; the director of the Department of Justice's Office of Information Policy

or his/her designee; and the Director of OGIS or his/her designee.

Non-Governmental members will include, at a minimum: Two individuals representing the interests of non-Governmental organizations that advocate on FOIA matters; one individual representing the interests of FOIA requesters who qualify for the ''all other'' FOIA requester fee category; one individual representing the interests of requesters who qualify for the ''news media'' FOIA requester fee category; one individual representing the interests of requesters who qualify for the ''commercial'' FOIA requester fee category; one individual representing the interests of historians and history-related organizations; and one individual representing the interests of academia.

IV. Committee Members' Responsibilities

All Committee members are expected to attend a minimum of eight in-person or virtual public meetings during the two-year Committee term. All Committee members are expected to volunteer for one or more working subcommittees that will meet at various times during the two-year term. The first meeting of the 2020–2022 Committee term is scheduled for Thursday, September 10, 2020, and will be conducted virtually.

V. Nomination Information

All nominations for Committee membership must include the following information:

1. If you are self-nominating: Your name, title, relevant contact information (including telephone and email address), and the representative role for which you wish to be considered;

2. If you are nominating another individual: The nominee's name, title, and relevant contact information, and the Committee position for which you are submitting the nominee;

3. For both self-nominations and nominations by other individuals: (a) A short paragraph or biography about the nominee (fewer than 250 words), summarizing their resumé or otherwise highlighting the contributions the nominee would bring to the Committee; and (b) the nominee's resumé or curriculum vitae.

The Archivist of the United States will review the nominations and make final appointments prior to the first Committee meeting in September. OGIS will notify nominees the Archivist selects in writing.

Maureen Macdonald,

Designated Committee Management Officer.

[FR Doc. 2020–12283 Filed 6–5–20; 8:45 am]

BILLING CODE 7515–01–P

NATIONAL SCIENCE FOUNDATION

Business and Operations Advisory Committee; Notice of Meeting

In accordance with the Federal Advisory Committee Act (Pub. L. 92–463, as amended), the National Science Foundation (NSF) announces the following meeting:

Name and Committee Code: Business and Operations Advisory Committee (9556) (Virtual).

Date and Time: June 29, 2020; 1:00 p.m. to 5:30 p.m. (EST).

Place: National Science Foundation, 2415 Eisenhower Avenue, Alexandria, Virginia, 22314 (virtual attendance only). To attend the virtual meeting, please send your request for the virtual meeting link to the following email address: *beason@nsf.gov.*

Type of Meeting: Open.

Contact Person: Patty Balanga, National Science Foundation, 2415 Eisenhower Avenue, Alexandria, VA, 22314; (703) 292–8100.

Purpose of Meeting: To provide advice concerning issues related to the oversight, integrity, development, and enhancement of NSF's business operations.

Agenda:

- Welcome/Introductions
- BFA, OIRM, Budget Updates
- Understanding the Top Five Impacts of the COVID–19 Pandemic on the National Research Community and the NSF Response
- Enterprise Risk Management in the COVID–19 Environment
- Meeting with Dr. Droegemeier and Dr. Crim

Dated: June 3, 2020.

Crystal Robinson,

Committee Management Officer.

[FR Doc. 2020–12322 Filed 6–5–20; 8:45 am]

BILLING CODE 7555–01–P

NATIONAL SCIENCE FOUNDATION

Proposal Review; Notice of Meetings

In accordance with the Federal Advisory Committee Act (Pub. L. 92–463, as amended), the National Science Foundation (NSF) announces its intent to hold proposal review meetings throughout the year. The purpose of these meetings is to provide advice and recommendations concerning proposals submitted to the NSF for financial support. The agenda for each of these meetings is to review and evaluate proposals as part of the selection process for awards. The review and evaluation may also include assessment of the progress of awarded proposals. The majority of these meetings will take place at NSF, 2415 Eisenhower Avenue, Alexandria, VA 22314.

These meetings will be closed to the public. The proposals being reviewed include information of a proprietary or confidential nature, including technical information; financial data, such as salaries; and personal information concerning individuals associated with the proposals. These matters are exempt under 5 U.S.C. 552b(c), (4) and (6) of the Government in the Sunshine Act. NSF will continue to review the agenda and merits of each meeting for overall compliance of the Federal Advisory Committee Act.

These closed proposal review meetings will not be announced on an individual basis in the **Federal Register**. NSF intends to publish a notice similar to this on a quarterly basis. For an advance listing of the closed proposal review meetings that include the names of the proposal review panel and the time, date, place, and any information on changes, corrections, or cancellations, please visit the NSF website: *https://www.nsf.gov/events/.* This information may also be requested by telephoning, 703/292–8687.

Dated: June 3, 2020.

Crystal Robinson,

Committee Management Officer.

[FR Doc. 2020–12343 Filed 6–5–20; 8:45 am]

BILLING CODE 7555–01–P

NUCLEAR REGULATORY COMMISSION

[NRC–2019–0257]

Information Collection: Nondiscrimination in Federally Assisted Programs or Activities Receiving Assistance From the Commission

AGENCY: Nuclear Regulatory Commission.

ACTION: Renewal of existing information collection; request for comment.

SUMMARY: The U.S. Nuclear Regulatory Commission (NRC) invites public comment on the renewal of Office of Management and Budget (OMB) approval for an existing collection of information. The information collection is entitled, ''Nondiscrimination in

Federally Assisted Programs or Activities Receiving Assistance from the Commission.''

DATES: Submit comments by August 7, 2020. Comments received after this date will be considered if it is practical to do so, but the Commission is able to ensure consideration only for comments received on or before this date.

ADDRESSES: You may submit comments by any of the following methods:

• *Federal Rulemaking Website:* Go to *https://www.regulations.gov* and search for Docket ID NRC–2019–0257. Address questions about NRC dockets IDs in *Regulations.gov* to Jennifer Borges; telephone: 301–287–9127; email: *Jennifer.Borges@nrc.gov.* For technical questions, contact the individual listed in the **FOR FURTHER INFORMATION CONTACT** section of this document.

• *Mail comments to:* David Cullison, Office of the Chief Information Officer, Mail Stop: T–6 A10M, U.S. Nuclear Regulatory Commission, Washington, DC 20555–0001.

For additional direction on obtaining information and submitting comments, see ''Obtaining Information and Submitting Comments'' in the **SUPPLEMENTARY INFORMATION** section of this document.

FOR FURTHER INFORMATION CONTACT: David Cullison, Office of the Chief Information Officer, U.S. Nuclear Regulatory Commission, Washington, DC 20555–0001; telephone: 301–415–2084; email: *Infocollects.Resource@nrc.gov.*

SUPPLEMENTARY INFORMATION:

I. Obtaining Information and Submitting Comments

A. Obtaining Information

Please refer to Docket ID NRC–2019–0257 when contacting the NRC about the availability of information for this action. You may obtain publicly-available information related to this action by any of the following methods:

• *Federal Rulemaking Website:* Go to *https://www.regulations.gov* and search for Docket ID NRC–2019–0257. A copy of the collection of information and related instructions may be obtained without charge by accessing Docket ID NRC–2019–0257 on this website.

• *NRC's Agencywide Documents Access and Management System (ADAMS):* You may obtain publicly-available documents online in the ADAMS Public Documents collection at *https://www.nrc.gov/reading-rm/adams.html.* To begin the search, select ''Begin Web-based ADAMS Search.'' For problems with ADAMS, please contact the NRC's Public Document Room (PDR) reference staff at 1–800–397–4209, 301–415–4737, or by email to *pdr.resource@nrc.gov.* A copy of NRC Forms 782 and related instructions may be obtained without charge by accessing ADAMS Accession No. ML20066F203. The supporting statement and burden spreadsheet are available in ADAMS under Accession Nos. ML20066F181 and ML20066F217.

• *NRC's Clearance Officer:* A copy of the collection of information and related instructions may be obtained without charge by contacting NRC's Clearance Officer, David Cullison, Office of the Chief Information Officer, U.S. Nuclear Regulatory Commission, Washington, DC 20555–0001; telephone: 301–415–2084; email: *Infocollects.Resource@nrc.gov.*

B. Submitting Comments

Please include Docket ID NRC–2019–0257 in the subject line of your comment submission, in order to ensure that the NRC is able to make your comment submission available to the public in this docket.

The NRC cautions you not to include identifying or contact information in comment submissions that you do not want to be publicly disclosed in your comment submission. The NRC will post all comment submissions at *https://www.regulations.gov* as well as enter the comment submissions into ADAMS, and the NRC does not routinely edit comment submissions to remove identifying or contact information.

If you are requesting or aggregating comments from other persons for submission to the NRC, then you should inform those persons not to include identifying or contact information that they do not want to be publicly disclosed in their comment submission. Your request should state that the NRC does not routinely edit comment submissions to remove such information before making the comment submissions available to the public or entering the comment into ADAMS.

II. Background

In accordance with the Paperwork Reduction Act of 1995 (44 U.S.C. Chapter 35), the NRC is requesting public comment on its intention to request the OMB's approval for the information collection summarized below.

1. *The title of the information collection:* 10 CFR part 4, Nondiscrimination in Federally Assisted Commission Programs.

2. *OMB approval number:* 3150–0053.

3. *Type of submission:* Revision.

4. *The form number, if applicable:* NRC Forms 782.

5. *How often the collection is required or requested:* NRC Form 782 is submitted on occasion, if any person believes himself or any specific class of individuals have been subjected to discrimination prohibited by title 10 of the *Code of Federal Regulations* (10 CFR) part 4, subpart A—Regulations Implementing Title VI of the Civil Rights Act of 1964 and Title IV of the Energy Reorganization Act of 1974, on behalf of the primary funding recipient or any other recipient that received NRC Federal financial assistance through the primary funding recipient. Self-evaluations are performed throughout the duration of obligation based on 10 CFR 4.231, Responsibility of applicants and recipients.

6. *Who will be required or asked to respond:* Recipients of Federal Financial Assistance provided by the NRC (including Educational Institutions, Other Nonprofit Organizations receiving Federal Assistance, and Agreement States).

7. *The estimated number of annual responses:* 452 (52 reporting responses + 200 recordkeeping responses + 200 third-party disclosure responses).

8. *The estimated number of annual respondents:* 200.

9. *The estimated number of hours needed annually to comply with the information collection requirement or request:* 727 hours (27 hours reporting + 650 hours recordkeeping + 50 hours third-party disclosure).

10. *Abstract:* All recipients of Federal financial assistance from the NRC are subject to the provisions of 10 CFR part 4, ''Nondiscrimination in Federally Assisted Programs or Activities Receiving Assistance from the Commission.'' Respondents must notify participants, beneficiaries, applicants, and employees of nondiscrimination practices and keep records of Federal financial assistance and of their own self-evaluations of policies and practices. In the event that discrimination is alleged in NRC-conducted and Federal financially assisted programs and activities, it may be reported using NRC Form 782.

III. Specific Requests for Comments

The NRC is seeking comments that address the following questions:

1. Is the proposed collection of information necessary for the NRC to properly perform its functions? Does the information have practical utility?

2. Is the estimate of the burden of the information collection accurate?

3. Is there a way to enhance the quality, utility, and clarity of the information to be collected?

4. How can the burden of the information collection on respondents be minimized, including the use of automated collection techniques or other forms of information technology?

Dated: June 3, 2020.

For the Nuclear Regulatory Commission.

David C. Cullison,

NRC Clearance Officer, Office of the Chief Information Officer.

[FR Doc. 2020–12328 Filed 6–5–20; 8:45 am]

BILLING CODE 7590–01–P

POSTAL REGULATORY COMMISSION

[Docket Nos. MC2020–148 and CP2020–159; MC2020–149 and CP2020–160; MC2020–150 and CP2020–161; MC2020–151 and CP2020–162]

New Postal Products

AGENCY: Postal Regulatory Commission.

ACTION: Notice.

SUMMARY: The Commission is noticing a recent Postal Service filing for the Commission's consideration concerning negotiated service agreements. This notice informs the public of the filing, invites public comment, and takes other administrative steps.

DATES: *Comments are due:* June 10, 2020.

ADDRESSES: Submit comments electronically via the Commission's Filing Online system at *http://www.prc.gov.* Those who cannot submit comments electronically should contact the person identified in the **FOR FURTHER INFORMATION CONTACT** section by telephone for advice on filing alternatives.

FOR FURTHER INFORMATION CONTACT: David A. Trissell, General Counsel, at 202–789–6820.

SUPPLEMENTARY INFORMATION:

Table of Contents

I. Introduction
II. Docketed Proceeding(s)

I. Introduction

The Commission gives notice that the Postal Service filed request(s) for the Commission to consider matters related to negotiated service agreement(s). The request(s) may propose the addition or removal of a negotiated service agreement from the market dominant or the competitive product list, or the modification of an existing product currently appearing on the market dominant or the competitive product list.

Section II identifies the docket number(s) associated with each Postal Service request, the title of each Postal Service request, the request's acceptance date, and the authority cited by the Postal Service for each request. For each request, the Commission appoints an officer of the Commission to represent the interests of the general public in the proceeding, pursuant to 39 U.S.C. 505 (Public Representative). Section II also establishes comment deadline(s) pertaining to each request.

The public portions of the Postal Service's request(s) can be accessed via the Commission's website (*http://www.prc.gov*). Non-public portions of the Postal Service's request(s), if any, can be accessed through compliance with the requirements of 39 CFR 3011.301.[1]

The Commission invites comments on whether the Postal Service's request(s) in the captioned docket(s) are consistent with the policies of title 39. For request(s) that the Postal Service states concern market dominant product(s), applicable statutory and regulatory requirements include 39 U.S.C. 3622, 39 U.S.C. 3642, 39 CFR part 3030, and 39 CFR part 3040, subpart B. For request(s) that the Postal Service states concern competitive product(s), applicable statutory and regulatory requirements include 39 U.S.C. 3632, 39 U.S.C. 3633, 39 U.S.C. 3642, 39 CFR part 3035, and 39 CFR part 3040, subpart B. Comment deadline(s) for each request appear in section II.

II. Docketed Proceeding(s)

1. *Docket No(s).:* MC2020–148 and CP2020–159; *Filing Title:* USPS Request to Add Priority Mail Contract 623 to Competitive Product List and Notice of Filing Materials Under Seal; *Filing Acceptance Date:* June 2, 2020; *Filing Authority:* 39 U.S.C. 3642, 39 CFR 3040.130 *et seq.,* and 39 CFR 3035.105; *Public Representative:* Kenneth R. Moeller; *Comments Due:* June 10, 2020.

2. *Docket No(s).:* MC2020–149 and CP2020–160; *Filing Title:* USPS Request to Add Priority Mail Contract 624 to Competitive Product List and Notice of Filing Materials Under Seal; *Filing Acceptance Date:* June 2, 2020; *Filing Authority:* 39 U.S.C. 3642, 39 CFR 3040.130 *et seq.,* and 39 CFR 3035.105; *Public Representative:* Kenneth R. Moeller; *Comments Due:* June 10, 2020.

3. *Docket No(s).:* MC2020–150 and CP2020–161; *Filing Title:* USPS Request to Add Priority Mail Contract 625 to Competitive Product List and Notice of Filing Materials Under Seal; *Filing Acceptance Date:* June 2, 2020; *Filing Authority:* 39 U.S.C. 3642, 39 CFR 3040.130 *et seq.,* and 39 CFR 3035.105; *Public Representative:* Christopher C. Mohr; *Comments Due:* June 10, 2020.

4. *Docket No(s).:* MC2020–151 and CP2020–162; *Filing Title:* USPS Request to Add Priority Mail Contract 626 to Competitive Product List and Notice of Filing Materials Under Seal; *Filing Acceptance Date:* June 2, 2020; *Filing Authority:* 39 U.S.C. 3642, 39 CFR 3040.130 *et seq.,* and 39 CFR 3035.105; *Public Representative:* Christopher C. Mohr; *Comments Due:* June 10, 2020.

This Notice will be published in the **Federal Register**.

Erica A. Barker,

Secretary.

[FR Doc. 2020–12358 Filed 6–5–20; 8:45 am]

BILLING CODE 7710–FW–P

[1] *See* Docket No. RM2018–3, Order Adopting Final Rules Relating to Non-Public Information, June 27, 2018, Attachment A at 19–22 (Order No. 4679).

POSTAL REGULATORY COMMISSION

[Docket No. R2020–2; Order No. 5526]

Market Dominant Price Adjustment

AGENCY: Postal Regulatory Commission.

ACTION: Notice.

SUMMARY: The Commission is noticing a recently filed Postal Service Notice regarding a Type 1–C Market Dominant rate adjustment. This notice informs the public of the filing, invites public comment, and takes other administrative steps.

DATES: *Comments are due:* June 22, 2020.

ADDRESSES: Submit comments electronically via the Commission's Filing Online system at *http://www.prc.gov.* Those who cannot submit comments electronically should contact the person identified in the **FOR FURTHER INFORMATION CONTACT** section by telephone for advice on filing alternatives.

FOR FURTHER INFORMATION CONTACT: David A. Trissell, General Counsel, at 202–789–6820.

SUPPLEMENTARY INFORMATION:

Table of Contents

I. Introduction
II. Overview
III. Initial Commission Action
IV. Ordering Paragraphs

I. Introduction

In accordance with 39 U.S.C. 3622 and 39 CFR part 3030, the Postal Service has filed notice of its intent to offer a new rate incentive, which would result

in a rate decrease.[1] The Postal Service seeks Commission approval of this rate incentive and related classification changes. Notice at 2.

II. Overview

Under the Commission's rules pertaining to Market Dominant rate adjustments, a ''Type 1–C'' rate adjustment is ''an adjustment to a rate of general applicability that contains only a decrease.'' 39 CFR 3030.506(a). Such a rate adjustment ''may generate unused rate adjustment authority . . .'' in certain circumstances. 39 CFR 3030.506(b).

The Postal Service states that it intends to offer an Every Door Direct Mail Retail (''EDDM Retail'') discount beginning August 1, 2020. Notice at 2. Specifically, the Postal Service asserts that:

> The extraordinary and unprecedented nature of the COVID–19 pandemic and the current economic downturn has severely harmed many businesses. Small local businesses have been hit particularly hard as they adopt austerity measures and pull back on their marketing efforts in response to business closures or drastic reductions in demand. EDDM Retail volume was down in Quarter 2 as compared to the same period last year by 21.3 million pieces (or 13.3 percent) while revenue fell by $3.2 million dollars (or 11 percent). A decline is projected to continue through postal Quarter 3, FY 2020 or further.
>
> Concurrent with the gradual reopening of the economy, the Postal Service intends to offer an EDDM Retail discount to encourage use of the mail as an advertising platform to reach existing and new customers. This should in turn assist small local businesses in recovering from the impact of the pandemic. Postage for all EDDM Retail pieces entered between August 1 and September 30, 2020 will be $0.172 per piece, a 10 percent reduction off the current permanent rate of $0.191. No registration is required: All EDDM Retail pieces entered during the promotional period will receive the discount. *Id.* at 3.

In support of its Notice, the Postal Service asserts that it has provided the information required by 39 CFR 3030.512(a), including a schedule of planned rates; the planned effective dates; representation that public notice of the planned rates has or will be issued; and the identity of a responsible Postal Service official available to respond to inquiries from the Commission.[2]

The Postal Service provides price cap compliance information as required by 39 CFR 3030.512(b)(1)–(4). The Postal Service states that it is electing to generate unused rate adjustment authority from the EDDM Retail discount pursuant to 39 CFR 3030.506(b) and 39 CFR 3030.512(b)(10). Notice at 4. It states that the workpapers for USPS Marketing Mail from Docket No. R2020–1 have been amended consistent with 39 CFR 3030.527 and 39 CFR 3030.523(b)(2). *Id.* The amended workpapers have been filed as a library reference.[3] The Postal Service asserts that the discount will generate a small amount of price cap space for the USPS Marketing Mail class (approximately $2 million, or 0.012 percent). Notice at 4.

As required by 39 CFR 3030.512(b)(7), the Postal Service provides a discussion of how this planned rate adjustment is designed to help achieve the objectives listed in 39 U.S.C. 3622(b), and properly takes into account the factors in 39 U.S.C. 3622(c). *Id.* at 5.

With regard to 39 CFR 3030.512(b)(5)–(6), the Postal Service asserts that the EDDM Retail discount would have no effect on workshare discounts approved in Docket No. R2020–1. *Id.* With regard to 39 CFR 3030.512(b)(8), the Postal Service asserts that the EDDM Retail discount will move the revenue-per-piece ratio calculated in Docket No. R2020–1 closer to 60 percent, as required by 39 U.S.C. 3626(a)(6). *Id.* at 5–6. The Postal Service asserts that no other portions of 39 U.S.C. 3626, 3627, or 3629 are implicated in this matter. *Id.*

III. Initial Commission Action

The Commission establishes Docket No. R2020–2 to consider the matters raised by the Notice. The Commission invites comments on whether the Postal Service's filing is consistent with the requirements of 39 U.S.C. 3622 and 3626, as well as 39 CFR part 3030. Comments are due June 22, 2020. *See* 39 CFR 3030.511(a)(5); 3010.108. These filings can be accessed via the Commission's website (*http://www.prc.gov*).

The Commission appoints Natalie R. Ward to serve as an officer of the Commission to represent the interests of the general public in these proceedings (Public Representative).

IV. Ordering Paragraphs

It is ordered:

1. The Commission establishes Docket No. R2020–2 to consider the matters raised by the Notice.
2. Comments are due June 22, 2020.
3. Pursuant to 39 U.S.C. 505, Natalie R. Ward is appointed to serve as an officer of the Commission to represent the interests of the general public in these proceedings (Public Representative).
4. The Secretary shall arrange for publication of this Order in the **Federal Register**.

By the Commission.

Erica A. Barker,

Secretary.

[FR Doc. 2020–12316 Filed 6–5–20; 8:45 am]

BILLING CODE 7710–FW–P

[1] United States Postal Service Notice of Type 1–C Market Dominant Price Change, June 1, 2020 (Notice).

[2] Notice at 2. The Postal Service filed its proposed changes to the Mail Classification Schedule as an attachment to its Notice. *See* Notice, Attachment A.

[3] Library Reference USPS–LR–R2020–2/1, June 1, 2020.

SECURITIES AND EXCHANGE COMMISSION

[Release No. 34–88994; File No. SR–ISE–2020–21]

Self-Regulatory Organizations; Nasdaq ISE, LLC; Notice of Filing and Immediate Effectiveness of Proposed Rule Change To Further Extend the Deadline for Certain Written Supervisory-Related Reports Pursuant to Options 10, Section 7 (Supervision of Accounts)

June 2, 2020.

Pursuant to Section 19(b)(1) of the Securities Exchange Act of 1934 (''Act''),[1] and Rule 19b–4 thereunder,[2] notice is hereby given that on June 1, 2020, Nasdaq ISE, LLC (''ISE'' or ''Exchange'') filed with the Securities and Exchange Commission (''SEC'' or ''Commission'') the proposed rule change as described in Items I and II below, which Items have been prepared by the Exchange. The Commission is publishing this notice to solicit comments on the proposed rule change from interested persons.

I. Self-Regulatory Organization's Statement of the Terms of Substance of the Proposed Rule Change

The Exchange proposes to further extend the filing requirements for certain written reports pursuant to Options 10, Section 7, currently due June 1, 2020, to June 30, 2020.

The text of the proposed rule change is available on the Exchange's website at *http://ise.cchwallstreet.com/,* at the principal office of the Exchange, and at the Commission's Public Reference Room.

II. Self-Regulatory Organization's Statement of the Purpose of, and Statutory Basis for, the Proposed Rule Change

In its filing with the Commission, the Exchange included statements

[1] 15 U.S.C. 78s(b)(1).

[2] 17 CFR 240.19b–4.

concerning the purpose of and basis for the proposed rule change and discussed any comments it received on the proposed rule change. The text of these statements may be examined at the places specified in Item IV below. The Exchange has prepared summaries, set forth in sections A, B, and C below, of the most significant aspects of such statements.

A. Self-Regulatory Organization's Statement of the Purpose of, and Statutory Basis for, the Proposed Rule Change

1. Purpose

Given current market conditions, the Exchange proposes to provide its members temporary relief from filing certain supervision-related reports pursuant to Options 10, Section 7 (Supervision of Accounts).[3]

In December 2019, COVID–19 began to spread and disrupt company operations and supply chains and impact consumers and investors, resulting in a dramatic slowdown in production and spending.[4] By March 11, 2020, the World Health Organization characterized COVID–19 as a pandemic.[5] To slow the spread of the disease, federal and state officials implemented social-distancing measures, placed significant limitations on large gatherings, limited travel, and closed non-essential businesses. These measures have affected the U.S. markets.[6] In the United States, Level 1 market wide circuit breaker halts were triggered on March 9, March 12, March 16, and March 18, 2020. While markets have seen significant declines, governments around the world are undertaking efforts to stabilize the economy and assist affected companies and their employees.[7] State governments have only recently relaxed some social distancing measures and permitted the limited reopening of non-essential businesses. Significant uncertainty remains.

Amidst this continued and unprecedented market uncertainty, the Exchange sought to address potential challenges that members may face in timely meeting their obligations to submit to the Exchange annual supervision-related reports under Options 10, Sections 7(g) and (h) (''Supervision Reporting Requirements''), especially in light of unforeseen and uncertain demands on resources required to respond to COVID–19. Options 10, Section 7(g) requires each Exchange member that conducts a non-member customer business to submit to the Exchange a written report on the member's supervision and compliance effort during the preceding year and on the adequacy of the member's ongoing compliance processes and procedures. Each member that conducts a public customer options business is also required to specifically include its options compliance program in the report.[8] The Section 7(g) report is due on April 1 of each year. Options 10, Section 7(h) requires that each member submit, by April 1 of each year, a copy of the Section 7(g) report to one or more control persons or, if the member has no control person, to the audit committee of its board of directors or its equivalent committee or group.[9]

On March 31, 2020, the Exchange filed a proposal to temporarily extend the filing requirements for these annual supervision-related reports from April 1, 2020 to June 1, 2020.[10] In light of the continued market uncertainty, the Exchange is again seeking to address potential challenges that members may face in timely meeting their obligations to submit to the Exchange annual supervision-related reports. Accordingly, the Exchange proposes to provide additional, temporary relief for members from the Supervision Reporting Requirements by further extending the June 1, 2020 filing deadlines described above to June 30, 2020. The Exchange believes that this additional, temporary relief will permit members to continue to focus on running their businesses and the health crisis caused by the COVID–19 pandemic, including its impact on their employees, customers, and communities.

The Exchange notes that in response to COVID–19, the Financial Industry Reporting Authority (''FINRA'') recently reissued temporary relief for member firms by, among other things, extending the deadline for submitting its supervision-related reports (FINRA Rule 3120 Report and FINRA Rule 3130 certification) from its initial extension deadlines of June 1, 2020[11] to June 30, 2020.[12] The Exchange notes, too, that at least one other options exchange that had previously extended the supervisory report deadlines from April 1 to June 1 for its members,[13] also plans to submit a similar filing to, again, extend its deadlines through June 30, 2020. In light of these deadline extensions, the Exchange believes that extending its deadline would avoid unnecessary confusion and added burden among entities that are members of both the Exchange and FINRA because the deadline to submit supervisory reports would remain uniform.

2. Statutory Basis

The Exchange believes that its proposal is consistent with Section 6(b) of the Act,[14] in general, and furthers the objectives of Section 6(b)(5) of the Act,[15] in particular, in that it is designed to promote just and equitable principles of trade; to remove impediments to and perfect the mechanism of a free and

[3] The Exchange notes that ISE Options 10, including Section 7, is incorporated by reference into the rulebooks of Nasdaq GEMX, LLC (''GEMX'') and Nasdaq MRX, LLC (''MRX''). As such, the amendments to ISE Options 10, Section 7 proposed herein will also impact GEMX and MRX Options 10, Section 7.

[4] *See, e.g.,* Chairman Jay Clayton, Proposed Amendments to Modernize and Enhance Financial Disclosures; Other Ongoing Disclosure Modernization Initiatives; Impact of the Coronavirus; Environmental and Climate-Related Disclosure (Jan. 30, 2020), *available at https://www.sec.gov/news/public-statement/clayton-mda-2020-01-30.* (''Yesterday, I asked the staff to monitor and, to the extent necessary or appropriate, provide guidance and other assistance to issuers and other market participants regarding disclosures related to the current and potential effects of the coronavirus. We recognize that such effects may be difficult to assess or predict with meaningful precision both generally and as an industry- or issuer-specific basis. This is an uncertain issue where actual effects will depend on many factors beyond the control and knowledge of issuers.'').

[5] *See* WHO Director-General's Opening Remarks at the Media Briefing on COVID–19 (March 11, 2020), *available at https://www.who.int/dg/speeches/detail/who-director-general-s-opening-remarks-at-the-media-briefing-on-covid-19---11-march-2020.*

[6] ''Analysts showed that we saw the fastest 'correction' in history (down 10% from a high), occurring in a matter of days. In the last week of February, the Dow fell 12.36% with notional trading of $3.6 trillion.'' *See* Phil Mackintosh, Putting the Recent Volatility in Perspective, available at *https://www.nasdaq.com/articles/putting-the-recent-volatility-in-perspective-2020-03-05.*

[7] *See, e.g.,* the list of actions undertaken by the Board of Governors of the Federal Reserve System at *https://www.federalreserve.gov/covid-19.htm. See also* Families First Coronavirus Response Act, Public Law 116–127.

[8] The report shall include, but not be limited to, the information set out in Options 10, Section 7(g)(1)–(6).

[9] *See* Options 10, Section 7(h) for the meaning of the term ''control person'' and requirements in the case of a control person that is an organization.

[10] *See* Securities Exchange Act Release No. 88827 (March 31, 2020), 85 FR 19190 (April 6, 2020) (Notice of Filing and Immediate Effectiveness of Proposed Rule Change To Temporarily Extend Certain Filing Requirement).

[11] *See* FINRA Regulatory Notice 20–08 (March 9, 2020) available at *https://www.finra.org/rules-guidance/notices/20-08.*

[12] *See* FINRA Regulatory Notice 20–08, FAQs, Supervision (May 19, 2020) available at *https://www.finra.org/rules-guidance/key-topics/covid-19/faq#supe.*

[13] *See* Securities Exchange Act No. 88528 (March 31, 2020), 85 FR 19196 (April 6, 2020) (SR–CBOE–2020–029).

[14] 15 U.S.C. 78f(b).

[15] 15 U.S.C. 78f(b)(5).

open market and a national market system; and, in general to protect investors and the public interest. As a result of continued uncertainty related to the ongoing spread of the COVID–19 virus, the U.S. exchanges are experiencing unprecedented market volatility. The proposed rule change would allow the Exchange to continue to provide temporary relief for members from the Supervision Reporting Requirements, which were amended once already to require members to provide written reports to the Exchange by June 1, 2020, and further extend that deadline to June 30, 2020. The Exchange believes that this additional, temporary relief is necessary and appropriate in the public interest, and consistent with the protection of investors, given the unforeseen and uncertain challenges, including business continuity implementation and market volatility, posed by COVID–19 to members that must comply with the Supervision Reporting Requirements. The Exchange also believes that it is necessary and appropriate in the public interest, and consistent with the protection of investors, because FINRA has also re-extended the time for its members to file supervision-related reports from June 1, 2020 to June 30, 2020.[16] Additionally, as indicated above, at least one other options exchange that had previously extended the supervisory report deadlines from April 1 to June 1 for its members,[17] plans to submit a similar filing to re-extend its deadlines through June 30, 2020. Extending the deadline, therefore, will ensure that those entities that are members of both FINRA and the Exchange have a uniform deadline to submit their supervisory reports.

B. Self-Regulatory Organization's Statement on Burden on Competition

The Exchange does not believe that the proposed rule change will impose any burden on competition not necessary or appropriate in furtherance of the purposes of the Act. The proposed rule change is not designed to address any competitive issues but rather to provide temporary relief for all members that are required to comply with the Supervision Reporting Requirements.

C. Self-Regulatory Organization's Statement on Comments on the Proposed Rule Change Received From Members, Participants, or Others

No written comments were either solicited or received.

[16] *See supra* note 12.

[17] *See supra* note 13.

III. Date of Effectiveness of the Proposed Rule Change and Timing for Commission Action

Because the foregoing proposed rule change does not: (i) Significantly affect the protection of investors or the public interest; (ii) impose any significant burden on competition; and (iii) become operative for 30 days from the date on which it was filed, or such shorter time as the Commission may designate, it has become effective pursuant to Section 19(b)(3)(A) of the Act [18] and subparagraph (f)(6) of Rule 19b–4 thereunder.[19]

A proposed rule change filed pursuant to Rule 19b–4(f)(6) under the Act [20] normally does not become operative for 30 days after the date of its filing. However, Rule 19b–4(f)(6)(iii) [21] permits the Commission to designate a shorter time if such action is consistent with the protection of investors and the public interest. The Exchange has requested that the Commission waive the 30-day operative delay so that the proposed rule change may become operative upon filing. The Commission notes that the proposed rule change would allow the Exchange, in light of the COVID–19 pandemic, to provide temporary relief for members by extending the deadline for written reports pursuant to the Supervision Reporting Requirements from June 1, 2020 to June 30, 2020. This is consistent with the extension FINRA has provided its members for supervision-related reports and certifications required pursuant to FINRA Rule 3120 and FINRA Rule 3130 [22] and the extension for certain supervision-related reports Cboe Exchange, Inc. has provided its trading permit holders.[23] The Commission believes that waiver of the 30-day operative delay is consistent with the protection of investors and the public interest. Accordingly, the Commission hereby waives the operative delay and designates the proposed rule change operative upon filing.[24]

[18] 15 U.S.C. 78s(b)(3)(A).

[19] 17 CFR 240.19b–4(f)(6). In addition, Rule 19b–4(f)(6) requires a self-regulatory organization to give the Commission written notice of its intent to file the proposed rule change at least five business days prior to the date of filing of the proposed rule change, or such shorter time as designated by the Commission. The Exchange has satisfied this requirement.

[20] 17 CFR 240.19b–4(f)(6).

[21] 17 CFR 240.19b–4(f)(6)(iii).

[22] *See supra* note 12.

[23] *See* Securities Exchange Act Release No. 88978 (June 1, 2020) (SR–CBOE–2020–049).

[24] For purposes only of waiving the 30-day operative delay, the Commission also has considered the proposed rule's impact on efficiency, competition, and capital formation. *See* 15 U.S.C. 78c(f).

At any time within 60 days of the filing of the proposed rule change, the Commission summarily may temporarily suspend such rule change if it appears to the Commission that such action is necessary or appropriate in the public interest, for the protection of investors, or otherwise in furtherance of the purposes of the Act.

IV. Solicitation of Comments

Interested persons are invited to submit written data, views, and arguments concerning the foregoing, including whether the proposed rule change is consistent with the Act. Comments may be submitted by any of the following methods:

Electronic Comments

- Use the Commission's internet comment form (*http://www.sec.gov/rules/sro.shtml*); or
- Send an email to *rule-comments@sec.gov.* Please include File Number SR–ISE–2020–21 on the subject line.

Paper Comments

- Send paper comments in triplicate to Secretary, Securities and Exchange Commission, 100 F Street NE, Washington, DC 20549–1090.

All submissions should refer to File Number SR–ISE–2020–21. This file number should be included on the subject line if email is used. To help the Commission process and review your comments more efficiently, please use only one method. The Commission will post all comments on the Commission's internet website (*http://www.sec.gov/rules/sro.shtml*). Copies of the submission, all subsequent amendments, all written statements with respect to the proposed rule change that are filed with the Commission, and all written communications relating to the proposed rule change between the Commission and any person, other than those that may be withheld from the public in accordance with the provisions of 5 U.S.C. 552, will be available for website viewing and printing in the Commission's Public Reference Room, 100 F Street NE, Washington, DC 20549 on official business days between the hours of 10:00 a.m. and 3:00 p.m. Copies of the filing also will be available for inspection and copying at the principal office of the Exchange. All comments received will be posted without change. Persons submitting comments are cautioned that we do not redact or edit

personal identifying information from comment submissions. You should submit only information that you wish to make available publicly. All submissions should refer to File Number SR–ISE–2020–21 and should be submitted on or before June 29, 2020.

For the Commission, by the Division of Trading and Markets, pursuant to delegated authority.[25]

J. Matthew DeLesDernier,

Assistant Secretary.

[FR Doc. 2020–12277 Filed 6–5–20; 8:45 am]

BILLING CODE 8011–01–P

[25] 17 CFR 200.30–3(a)(12).

SECURITIES AND EXCHANGE COMMISSION

[Release No. 34–88987; File No. SR–NASDAQ–2020–028]

Self-Regulatory Organizations; The Nasdaq Stock Market LLC; Notice of Filing of Proposed Rule Change To Amend IM–5101–1 (Use of Discretionary Authority) To Deny Listing or Continued Listing or To Apply Additional and More Stringent Criteria to an Applicant or Listed Company Based on Considerations Related to the Company's Auditor or When a Company's Business Is Principally Administered in a Jurisdiction That Is a Restrictive Market

June 2, 2020.

Pursuant to Section 19(b)(1) of the Securities Exchange Act of 1934 (''Act''),[1] and Rule 19b–4 thereunder,[2] notice is hereby given that on May 19, 2020, The Nasdaq Stock Market LLC (''Nasdaq'' or ''Exchange'') filed with the Securities and Exchange Commission (''SEC'' or ''Commission'') the proposed rule change as described in Items I and II below, which Items have been prepared by the Exchange. The Commission is publishing this notice to solicit comments on the proposed rule change from interested persons.

I. Self-Regulatory Organization's Statement of the Terms of Substance of the Proposed Rule Change

The Exchange proposes to apply additional and more stringent criteria to an applicant or listed company based on the qualifications of the company's auditor.

The text of the proposed rule change is available on the Exchange's website at *http://nasdaq.cchwallstreet.com,* at the principal office of the Exchange, and at the Commission's Public Reference Room.

[1] 15 U.S.C. 78s(b)(1).

[2] 17 CFR 240.19b–4.

II. Self-Regulatory Organization's Statement of the Purpose of, and Statutory Basis for, the Proposed Rule Change

In its filing with the Commission, the Exchange included statements concerning the purpose of and basis for the proposed rule change and discussed any comments it received on the proposed rule change. The text of these statements may be examined at the places specified in Item IV below. The Exchange has prepared summaries, set forth in sections A, B, and C below, of the most significant aspects of such statements.

A. Self-Regulatory Organization's Statement of the Purpose of, and Statutory Basis for, the Proposed Rule Change

1. Purpose

Nasdaq's listing requirements include transparent criteria and corporate governance requirements. These requirements are designed to protect investors and the public interest; to ensure that a company seeking to list on Nasdaq is prepared for the rigors of operating as a public company; to provide transparent disclosure to investors in accordance with the SEC's and Nasdaq's reporting requirements; and to ensure sufficient investor interest to support liquid trading. Those criteria are set forth in the Nasdaq Rule 5000 Series.

In addition to the criteria set forth in the Rule 5000 Series, Rule 5101 describes Nasdaq's broad discretionary authority over the initial and continued listing of securities on Nasdaq in order to maintain the quality of and public confidence in its market, to prevent fraudulent and manipulative acts and practices, to promote just and equitable principles of trade, and to protect investors and the public interest. Nasdaq may use such discretion to deny initial listing, apply additional or more stringent criteria for the initial or continued listing of particular securities, or suspend or delist particular securities based on any event, condition, or circumstance that exists or occurs that makes initial or continued listing of the securities on Nasdaq inadvisable or unwarranted in the opinion of Nasdaq, even though the securities meet all enumerated criteria for initial or continued listing on Nasdaq.[3]

[3] *See* Rule 5101.

Nasdaq rules[4] and federal securities laws[5] require a company's financial statements included in its initial registration statement or annual report to be audited by an independent public accountant that is registered with the Public Company Accounting Oversight Board (''PCAOB''). Company management is responsible for preparing the company's financial statements and for establishing and maintaining disclosure controls and procedures and internal control over financial reporting. The company's auditor, based on its independent audit of the evidence supporting the amounts and disclosures in the financial statements, expresses an opinion on whether the financial statements present fairly, in all material respects, the company's financial position, results of operations and cash flows. ''To form an appropriate basis for expressing an opinion on the financial statements, the auditor must plan and perform the audit to obtain reasonable assurance about whether the financial statements are free of material misstatement due to error or fraud.''[6]

The auditor, in turn, is normally subject to inspection by the PCAOB, which assesses compliance with PCAOB and SEC rules and professional standards in connection with the auditor's performance of audits. According to the PCAOB,

> PCAOB inspections may result in the identification of deficiencies in one or more of an audit firm's audits of issuers and/or in its quality control procedures which, in turn, can result in an audit firm carrying out additional procedures that should have been performed already at the time of the audit. Those procedures have sometimes led to the audited public company having to revise and refile its financial statements or its assessment of the effectiveness of its internal control over financial reporting. In addition, through the quality control remediation portion of the inspection process, inspected

[4] *See* Rule 5210(b) (''Each Company applying for initial listing must be audited by an independent public accountant that is registered as a public accounting firm with the Public Company Accounting Oversight Board, as provided for in Section 102 of the Sarbanes-Oxley Act of 2002 [15 U.S.C. 7212].'') and Rule 5250(c)(3) (''Each listed Company shall be audited by an independent public accountant that is registered as a public accounting firm with the Public Company Accounting Oversight Board, as provided for in Section 102 of the Sarbanes-Oxley Act of 2002 [15 U.S.C. 7212].'').

[5] *See* Section 4100—Qualifications of Accountants, *SEC Financial Reporting Manual* (June 30, 2009), available at *https://www.sec.gov/corpfin/cf-manual/topic-4/.*

[6] *See* PCAOB Auditing Standard 1101.03—Audit Risk, available at *https://pcaobus.org/Standards/Auditing/Pages/AS1101.aspx.*

firms identify and implement practices and procedures to improve future audit quality.[7]

Nasdaq and investors rely on the work of auditors to provide reasonable assurances that the financial statements provided by a company are free of material misstatements. Nasdaq and investors further rely on the PCAOB's critical role in overseeing the quality of the auditor's work. The Chairman and the Chief Accountant of the Commission, along with the Chairman of the PCAOB, have raised concerns that national barriers on access to information can impede effective regulatory oversight of U.S.-listed companies with operations in certain countries, including the PCAOB's inability to inspect the audit work and practices of auditors in those countries.[8] In particular, the PCAOB is currently prevented from inspecting the audit work and practices of PCAOB-registered auditors in Belgium, France, China and Hong Kong (to the extent their audit clients have operations in mainland China).[9]

Nasdaq shares these concerns and believes that accurate financial statement disclosure is critical for investors to make informed investment decisions. Nasdaq is concerned that constraints on the PCAOB's ability to inspect auditor work in countries with national barriers on access to information weaken assurances that the disclosures and financial information of companies with operations in such countries are not misleading.

Currently, Nasdaq may rely upon its broad authority provided under Rule 5101 to deny initial or continued listing or to apply additional and more stringent criteria when the auditor of an applicant or a Nasdaq-listed company: (1) Has not been subject to an inspection by the PCAOB (either historically or because it is newly formed and as therefore not yet undergone a PCAOB inspection), (2) is an auditor that the PCAOB cannot inspect, or (3) otherwise does not demonstrate sufficient resources, geographic reach or experience as it relates to the company's audit, including in circumstances where a PCAOB inspection has uncovered significant deficiencies in the auditors' conduct in other audits or in its system of quality controls.

Nasdaq believes that codifying the nature and scope of its existing discretion when assessing the qualifications of a company's auditor will increase transparency to investors, companies and market participants. Accordingly, in order to preserve and strengthen the quality of and public confidence in the Nasdaq market, and in order to enhance investor confidence, Nasdaq proposes to amend IM–5101–1 to add a new subparagraph (b) that sets forth factors Nasdaq may consider in applying additional and more stringent criteria to an applicant or listed company based on the qualifications of the company's auditor. Such factors include:

(1) Whether the auditor has been subject to a PCAOB inspection, such as where the auditor is newly formed and has therefore not yet undergone a PCAOB inspection or where the auditor, or an accounting firm engaged to assist with the audit, is located in a jurisdiction that limits the PCAOB's ability to inspect the auditor;

(2) if the company's auditor has been inspected by the PCAOB, whether the results of that inspection indicate that the auditor has failed to respond to any requests by the PCAOB or that the inspection has uncovered significant deficiencies in the auditors' conduct in other audits or in its system of quality controls;

(3) whether the auditor can demonstrate that it has adequate personnel in the offices participating in the audit with expertise in applying U.S. GAAP, GAAS or IFRS, as applicable, in the company's industry;

(4) whether the auditor's training program for personnel participating in the company's audit is adequate;

(5) for non-U.S. auditors, whether the auditor is part of a global network or other affiliation of individual auditors where the auditors draw on globally common technologies, tools, methodologies, training and quality assurance monitoring; and

(6) whether the auditor can demonstrate to Nasdaq sufficient resources, geographic reach or experience as it relates to the company's audit.

Nasdaq will consider these factors holistically and may be satisfied with an auditor's qualifications notwithstanding the fact that the auditor raises concerns with respect to some of the factors set forth above. For example, Nasdaq may be satisfied that an auditor that is not subject to PCAOB inspection has mitigated the risk that it may have significant undetected deficiencies in its system of quality controls by being a part of a global network where the auditors draw on globally common technologies, tools, methodologies, training and quality assurance monitoring.

The proposed rule will include examples of additional and more stringent criteria that Nasdaq may apply to an applicant or a Nasdaq-listed company to obtain comfort that the company satisfies the financial listing requirements and is suitable for listing. These could include, as explained in greater detail below, requiring: (i) Higher equity, assets, earnings or liquidity measures than otherwise required under the Rule 5000 Series; (ii) that any offering be underwritten on a firm commitment basis, which typically involves more due diligence by the broker-dealer than would be done in connection with a best-efforts offering; or (iii) companies to impose lock-up restrictions on officers and directors to

[7] *See* Public Company Accounting Oversight Board, *Public Companies that are Audit Clients of PCAOB-Registered Firms from Non-U.S. Jurisdictions where the PCAOB is Denied Access to Conduct Inspections* (April 1, 2020), available at *https://pcaobus.org/International/Inspections/Pages/IssuerClientsWithoutAccess.aspx.*

[8] *See* SEC Chairman Jay Clayton, SEC Chief Accountant Wes Bricker and PCAOB Chairman William D. Duhnke III, *Statement on the Vital Role of Audit Quality and Regulatory Access to Audit and Other Information Internationally—Discussion of Current Information Access Challenges with Respect to U.S.-listed Companies with Significant Operations in China* (December 7, 2018), available at *https://www.sec.gov/news/public-statement/statement-vital-role-audit-quality-and-regulatory-access-audit-and-other* (''Some of these laws, for example, act to prohibit foreign-domiciled registrants in certain jurisdictions from responding directly to SEC requests for information and documents or doing so, in whole or in part, only after protracted delays in obtaining authorization. Other laws can prevent the SEC from being able to conduct any type of examination, either onsite or by correspondence . . . Positions taken by some foreign authorities currently prevent or significantly impair the PCAOB's ability to inspect non-U.S. audit firms in certain countries, even though these firms are registered with the PCAOB.''). On April 21, 2020, these concerns were reiterated by the Chairman and the Chief Accountant of the Commission, along with the Chairman of the PCAOB and the Directors of the SEC Divisions of Corporation Finance and Investment Management. *See* SEC Chairman Jay Clayton, PCAOB Chairman William D. Duhnke III, SEC Chief Accountant Sagar Teotia, SEC Division of Corporation Finance Director William Hinman, SEC Division of Investment Management Director Dalia Blass, *Emerging Market Investments Entail Significant Disclosure, Financial Reporting and Other Risks; Remedies are Limited* (April 21, 2020), available at *https://www.sec.gov/news/public-statement/emerging-market-investments-disclosure-reporting.*

[9] *See supra \\ad.sec.gov\users\mr\SchandlerS\NASDAQ* 2020–028 (auditors)\supra note 7. The PCAOB notes that ''[t]he position taken by authorities in mainland China may in some circumstances cause a registered firm located in another jurisdiction to attempt to resist PCAOB inspection of public company audit work that the firm has performed relating to the company's operations in mainland China. Only in mainland China and Hong Kong, however, is the position of the Chinese authorities effectively an obstacle to inspection of all, or nearly all, registered firms in the jurisdiction.'' In addition, the PCAOB's cooperative arrangement with the French audit authority expired in December 2019, preventing inspections of registered firms in France until a new arrangement is concluded. According to the PCAOB, it expects to enter into bilateral cooperative arrangements soon that will permit the PCAOB to commence inspections in Belgium and resume inspections in France.

allow market mechanisms to determine an appropriate price for the company before such insiders can sell shares.

Nasdaq and investors rely on the company's auditors to provide reasonable assurances that the financial statements provided by a company are free of material misstatements and do not, for example, overstate the company's equity, assets or revenues. Where Nasdaq is concerned that the company's auditor does not satisfy the criteria proposed in IM–5101–1(b), Nasdaq may still obtain comfort that the company truly satisfies the financial listing criteria by imposing a higher standard. Nasdaq may also have concerns that a company listing on Nasdaq through an initial public offering, business combination, direct listing or issuing securities previously trading over the counter (''OTC'') may not develop sufficient public float, investor base, and trading interest to provide the depth and liquidity necessary to promote fair and orderly trading, resulting in a security that is illiquid. In such cases, Nasdaq may impose additional liquidity measures on the company, such as requiring a higher public float percentage, market value of unrestricted publicly held shares or average OTC trading volume. Nasdaq may also obtain additional comfort regarding the quality of the company's financial statements by requiring the offering to be underwritten, which helps to ensure that third parties other than the auditor are conducting significant due diligence on the company, its registration statement and its financial statements.

In certain instances, Nasdaq believes it may be appropriate to prevent the company's insiders from selling their shares if material misstatements are detected by the company's auditors and have not been disclosed to investors. Therefore, Nasdaq may also impose lock-up restrictions on officers and directors to allow market mechanisms to determine an appropriate price for the company before such insiders can sell shares. Nasdaq may impose each of these requirements separately or in combination. In some cases, Nasdaq may determine that listing is not appropriate and deny initial or continued listing to a company.

The risks to U.S. investors are heightened when a company's business is principally administered in a jurisdiction that has secrecy laws, blocking statutes, national security laws or other laws or regulations restricting access to information by regulators of U.S.-listed companies in such jurisdiction, which raise concerns about the accuracy of disclosures, accountability, and access to information.[10] Nasdaq also proposes to amend IM–5101–1 to add a new subparagraph (c) to clarify that Nasdaq may also use its discretionary authority to impose additional or more stringent criteria, including the criteria set forth in IM–5101–1(b), in other circumstances, including when a company's business is principally administered in a jurisdiction that Nasdaq determines to have secrecy laws, blocking statutes, national security laws or other laws or regulations restricting access to information by regulators of U.S.-listed companies in such jurisdiction (a ''Restrictive Market''). In determining whether a company's business is principally administered in a Restrictive Market, Nasdaq may consider the geographic locations of the company's: (a) Principal business segments, operations or assets; (b) board and shareholders' meetings; (c) headquarters or principal executive offices; (d) senior management and employees; and (e) books and records.[11] Nasdaq will consider these factors holistically, recognizing that a company's headquarters may not be the office from which it conducts its principal business activities. For example, a company's headquarters could be located in Country A, while the majority of its senior management, employees, assets, operations and books and records are located in Country B, which is a Restrictive Market. In this case, Nasdaq would consider the company's business to be principally administered in Country B, which is a Restrictive Market, and Nasdaq would use its discretionary authority to apply additional or more stringent criteria to the company.

Lastly, Nasdaq proposes to identify certain paragraphs within IM–5101–1 as subparagraphs (a), (d) and (e), add headings to the subparagraphs, and to relocate text describing Nasdaq's review process to paragraph (e), in order to enhance readability of the rule. Nasdaq also proposes to revise ''listing qualifications panel'' to ''Hearings Panel (as defined in Rule 5805(d))'' for consistency within Nasdaq's rulebook.

In the event that Nasdaq relies on such discretionary authority and determines to deny the initial or continued listing of a company, it would issue a denial or delisting letter to the company that will inform the company of the factual basis for the Nasdaq's determination and its right for review of the decision pursuant to the Rule 5800 Series.[12]

The Exchange believes that the proposed rule change will enhance transparency regarding how Nasdaq may exercise its existing discretion when considering the qualifications of the company's auditor and the jurisdiction where the company principally administers its business in determining whether to grant initial or continued listing of a company.

2. Statutory Basis

The Exchange believes that its proposal is consistent with Section 6(b) of the Act,[13] in general, and furthers the objectives of Section 6(b)(5) of the Act,[14] in particular, in that it is designed to prevent fraudulent and manipulative acts and practices, to promote just and equitable principles of trade, to remove impediments to and perfect the mechanism of a free and open market and a national market system, and, in general to protect investors and the public interest. Further, the Exchange believes that this proposal is not designed to permit unfair discrimination between customers, issuers, brokers, or dealers.

Nasdaq and investors rely on the work of auditors to provide reasonable assurances that the financial statements provided by a company are free of material misstatements. The PCAOB states that ''[r]easonable assurance is obtained by reducing audit risk to an appropriately low level through applying due professional care, including obtaining sufficient appropriate audit evidence.'' [15] Nasdaq believes that the PCAOB's inability to inspect the audit work and practices of auditors in certain countries weakens the assurance that the auditor obtained sufficient appropriate audit evidence to express its opinion on a company's

[10] *See supra* note 3.

[11] This threshold would capture both foreign private issuers based in Restrictive Markets and companies based in the U.S. or another jurisdiction that principally administer their businesses in Restrictive Markets. The factors that Nasdaq would consider when determining whether a business is principally administered in a Restrictive Market is supported by SEC guidance regarding foreign private issuer status, which suggests that a foreign company may consider certain factors including the locations of: the company's principal business segments or operations; its board and shareholders' meetings; its headquarters; and its most influential key executives (potentially a subset of all executives). *See* Division of Corporation Finance of the SEC, *Accessing the U.S. Capital Markets—A Brief Overview for Foreign Private Issuers* (February 13, 2013), available at *https://www.sec.gov/divisions/corpfin/internatl/foreign-private-issuers-overview.shtml#IIA2c.*

[12] *See* Rule 5815, which sets forth the review of staff determinations by a Hearings Panel, including the procedures for requesting and preparing for a hearing and the scope of the Hearing Panel's discretion.

[13] 15 U.S.C. 78f(b).

[14] 15 U.S.C. 78f(b)(5).

[15] *See supra* note 6.

financial statements, and decreases confidence that the auditor complied with PCAOB and SEC rules and professional standards in connection with the auditor's performance of audits. The proposed rule would provide transparency to cases where Nasdaq may impose additional and more stringent criteria on a company based on the qualifications of its auditor in order to help provide greater assurances that the company's financial statements are free of material misstatements due to fraud or error, thereby preventing fraudulent and manipulative acts and protecting investors and the public interest.

The proposed rule change would also protect investors and the public interest by providing Nasdaq and investors with greater assurances that the company indeed satisfies Nasdaq's financial listing requirements set forth in the Rule 5000 Series. Nasdaq believes that without reasonable assurances that a company's financial statements and related disclosures are free from material misstatements, there is a risk that a company that would otherwise not have qualified to list on Nasdaq may satisfy Nasdaq's listing standards by presenting financial statements that contain undetected material misstatements. In *the Matter of the Tassaway, Inc.,* the Commission observed that

> Though exclusion from the system may hurt existing investors, primary emphasis must be placed on the interests of prospective future investors. The latter group is entitled to assume that the securities in the system meet the system's standards. Hence the presence in NASDAQ of non-complying securities could have a serious deceptive effect.[16]

The proposed rule change would provide greater assurances to investors that a company truly meets Nasdaq's financial listing requirement by clarifying that Nasdaq may use its existing discretion to apply additional and more stringent criteria, such as requiring: (i) Higher equity, assets, earnings or liquidity measures than otherwise required under the Rule 5000 Series; (ii) that any offering be underwritten on a firm commitment basis, which typically involves more due diligence by the broker-dealer than would be done in connection with a best-efforts offering; or (iii) companies to impose lock-up restrictions on officers and directors to allow market mechanisms to determine an appropriate price for the company before such insiders can sell shares. In some cases, Nasdaq may determine that listing is not appropriate and deny initial or continued listing to a company. Nasdaq believes that providing specific examples of such additional and more stringent criteria will alert companies seeking to list on Nasdaq, as well as currently listed companies, that the company may be subject to additional criteria as a condition for initial and continued listing on Nasdaq and will provide transparency to investors, companies and market participants, thereby protecting investors and the public interest.

Nasdaq believes that its proposal to add a new subparagraph (c) to clarify that Nasdaq may also use its discretionary authority to impose additional or more stringent criteria, including the criteria set forth in IM–5101–1(b), in other circumstances, including when a company's business is principally administered in a Restrictive Market, will help ensure that Nasdaq has access to the information needed to carry out its regulatory duties, thereby preventing fraudulent and manipulative acts and protecting investors and the public interest.

The Exchange believes that the proposed rules clarify Nasdaq's discretionary authority under Rule 5101 ''to apply additional or more stringent criteria for the initial or continued listing of particular securities, or suspend or delist particular securities based on any event, condition, or circumstance that exists or occurs that makes initial or continued listing of the securities on Nasdaq inadvisable or unwarranted in the opinion of Nasdaq, even though the securities meet all enumerated criteria for initial or continued listing on Nasdaq.'' [17] Nasdaq has maintained its broad discretionary authority for 26 years. On June 3, 1994, the Commission approved a proposal from National Association of Securities Dealers, Inc. (''NASD'') to amend Schedule D to the NASD By-Laws to clarify the NASD's discretionary authority to exclude an issuer from Nasdaq or require additional or more stringent criteria for inclusion in Nasdaq for issuers that are managed, controlled or influenced by persons with a history of significant securities or commodities violations.[18] In approving the proposal, the Commission stated that ''[a]lthough the Commission is of the view that the NASD's current rules authorize it to exclude an issuer, the proposal would clarify that authority. The Commission believes that this rule change provides greater protection to both existing and prospective investors. This rule change provides investors greater assurance that the risk associated with investing in Nasdaq is market risk rather than the risk that the promoter or other persons exercising substantial influence over the issuer is acting in an illegal manner.'' [19] Similarly, the Exchange believes that the current proposal would clarify Nasdaq's existing authority and would help reduce the risk for existing and prospective investors that the financial statements of a Nasdaq-listed company may contain material misstatements that were not discovered due to a lack of robust oversight of the company's auditor.

The proposed rule changes would apply to all companies listed and seeking to list on Nasdaq. However, Nasdaq may only apply additional and more stringent criteria when an applicant or a Nasdaq-listed company is unable to demonstrate to Nasdaq, through the enumerated factors, that its auditor has sufficient PCAOB inspection history, quality controls, resources, geographic reach and experience to adequately perform the company's audit. Nasdaq may also only apply its discretionary authority when a company's business is principally administered in a Restrictive Market.

Notwithstanding the forgoing, the Exchange believes that the proposal does not unfairly discriminate among companies because Nasdaq and the SEC have identified additional concerns around companies with auditors that do not have sufficient PCAOB inspection history, quality controls, resources, geographic reach and experience to adequately perform the company's audit and companies whose business is principally administered in a Restrictive Market. In light of these concerns, the proposed rule change will increase assurances that companies listed on Nasdaq satisfy Nasdaq's financial listing requirements and are suitable for listing on a U.S. securities exchange, and that Nasdaq has access to the information required to perform its regulatory duties, which will prevent fraudulent and manipulative acts and practices, promote just and equitable principles of trade and protect investors and the public interest.

Under the proposed changes, the Exchange will use its discretion in determining to apply additional and

[16] *See In the Matter of Tassaway, Inc.,* Securities Exchange Act Release No. 11291, 1975 WL 160383; 45 SEC. 706 (March 13, 1975).

[17] *See supra* note 3.

[18] Securities Exchange Act Release No. 34151 (June 3, 1994), 59 FR 29843 (June 9, 1994) (SR–NASD–94–19) (available at *https://www.govinfo.gov/content/pkg/FR-1994-06-09/html/94-14031.htm*). This was the predecessor to current Nasdaq Rule 5101.

[19] *Id.*

more stringent criteria. The Exchange believes that this is not unfair discrimination among companies because applying additional and more stringent criteria may not be appropriate in all circumstances, for example if the company's auditor is able to demonstrate that it has sufficient PCAOB inspection history, quality controls, resources, geographic reach and experience to adequately perform the company's audit. Similarly, it may not be appropriate for Nasdaq to apply its discretionary authority in all cases where a company's business is principally administered in a Restrictive Market. For example, a company may be headquartered in Country A, which is a Restrictive Market, but have the majority of its employees, operations, senior management, assets and books and records in Country B, which is not a Restrictive Market. In such cases, Nasdaq would consider the company's business to be principally administered in Country B and Nasdaq would not use its discretionary authority to apply additional or more stringent criteria.

Nasdaq believes that the proposed changes recognize that one size does not fit all companies and clarify the scope of the Exchange's existing discretion to apply additional and more stringent criteria, including potentially prohibiting a company's listing, based on the qualifications of its auditor or the jurisdiction where the company principally administers its business, thereby protecting investors and the public interest.

Lastly, Nasdaq believes its proposal to identify certain paragraphs within IM–5101–1 as subparagraphs (a), (d) and (e), add headings to the subparagraphs, and to relocate text describing Nasdaq's review process to paragraph (e), will enhance readability of the rule. Similarly, Nasdaq believes its proposal to and revise ''listing qualifications panel'' to ''Hearings Panel (as defined in Rule 5805(d))'' will enhance consistency within Nasdaq's rulebook. Nasdaq believes both proposals will promote investor protection and the public interest.

B. Self-Regulatory Organization's Statement on Burden on Competition

The Exchange does not believe that the proposed rule change will impose any burden on competition not necessary or appropriate in furtherance of the purposes of the Act. Nasdaq is adopting this proposed rule change to enhance investor protection, which is a central purpose of the Act. Any impact on competition, either among listed companies or between exchanges, is incidental to that purpose.

C. Self-Regulatory Organization's Statement on Comments on the Proposed Rule Change Received From Members, Participants, or Others

No written comments were either solicited or received.

III. Date of Effectiveness of the Proposed Rule Change and Timing for Commission Action

Within 45 days of the date of publication of this notice in the **Federal Register** or within such longer period up to 90 days (i) as the Commission may designate if it finds such longer period to be appropriate and publishes its reasons for so finding or (ii) as to which the Exchange consents, the Commission will: (a) By order approve or disapprove such proposed rule change, or (b) institute proceedings to determine whether the proposed rule change should be disapproved.

IV. Solicitation of Comments

Interested persons are invited to submit written data, views, and arguments concerning the foregoing, including whether the proposed rule change is consistent with the Act. Comments may be submitted by any of the following methods:

Electronic Comments

- Use the Commission's internet comment form (*http://www.sec.gov/rules/sro.shtml);* or
- Send an email to *rule-comments@sec.gov.* Please include File Number SR–NASDAQ–2020–028 on the subject line.

Paper Comments

- Send paper comments in triplicate to Secretary, Securities and Exchange Commission, 100 F Street NE, Washington, DC 20549–1090.

All submissions should refer to File Number SR–NASDAQ–2020–028. This file number should be included on the subject line if email is used. To help the Commission process and review your comments more efficiently, please use only one method. The Commission will post all comments on the Commission's internet website (*http://www.sec.gov/rules/sro.shtml*). Copies of the submission, all subsequent amendments, all written statements with respect to the proposed rule change that are filed with the Commission, and all written communications relating to the proposed rule change between the Commission and any person, other than those that may be withheld from the public in accordance with the provisions of 5 U.S.C. 552, will be available for website viewing and printing in the Commission's Public Reference Room, 100 F Street NE, Washington, DC 20549, on official business days between the hours of 10:00 a.m. and 3:00 p.m. Copies of the filing also will be available for inspection and copying at the principal office of the Exchange. All comments received will be posted without change. Persons submitting comments are cautioned that we do not redact or edit personal identifying information from comment submissions. You should submit only information that you wish to make available publicly. All submissions should refer to File Number SR–NASDAQ–2020–028 and should be submitted on or before June 29, 2020.

For the Commission, by the Division of Trading and Markets, pursuant to delegated authority.[20]

J. Matthew DeLesDernier,

Assistant Secretary.

[FR Doc. 2020–12271 Filed 6–5–20; 8:45 am]

BILLING CODE 8011–01–P

SECURITIES AND EXCHANGE COMMISSION

[Release No. 34–88990; File No. SR–NYSECHX–2020–17]

Self-Regulatory Organizations; NYSE Chicago, Inc.; Notice of Filing and Immediate Effectiveness of Proposed Rule Change To Amend the Fee Schedule of NYSE Chicago, Inc. Related to Co-Location Services

June 2, 2020.

Pursuant to Section 19(b)(1)[1] of the Securities Exchange Act of 1934 (the ''Act'')[2] and Rule 19b–4 thereunder,[3] notice is hereby given that, on May 18, 2020, the NYSE Chicago, Inc. (''NYSE Chicago'' or the ''Exchange'') filed with the Securities and Exchange Commission (the ''Commission'') the proposed rule change as described in Items I and II below, which Items have been prepared by the self-regulatory organization. The Commission is publishing this notice to solicit comments on the proposed rule change from interested persons.

I. Self-Regulatory Organization's Statement of the Terms of Substance of the Proposed Rule Change

The Exchange proposes to amend the Fee Schedule of NYSE Chicago, Inc. (''Fee Schedule'') related to co-location

[20] 17 CFR 200.30–3(a)(12).

[1] 15 U.S.C. 78s(b)(1).

[2] 15 U.S.C. 78a.

[3] 17 CFR 240.19b–4.

services with respect to connectivity to the ICE Data Global Index and to waive any change fees that a User would otherwise incur as a result of the proposed change. The proposed rule change is available on the Exchange's website at *www.nyse.com,* at the principal office of the Exchange, and at the Commission's Public Reference Room.

II. Self-Regulatory Organization's Statement of the Purpose of, and Statutory Basis for, the Proposed Rule Change

In its filing with the Commission, the self-regulatory organization included statements concerning the purpose of, and basis for, the proposed rule change and discussed any comments it received on the proposed rule change. The text of those statements may be examined at the places specified in Item IV below. The Exchange has prepared summaries, set forth in sections A, B, and C below, of the most significant parts of such statements.

A. Self-Regulatory Organization's Statement of the Purpose of, and the Statutory Basis for, the Proposed Rule Change

1. Purpose

The Exchange proposes to amend the Fee Schedule related to co-location [4] services offered by the Exchange with respect to connectivity to the ICE Data Global Index (''GIF'') and to waive any change fees that a User would otherwise incur as a result of the proposed change.

Proposed Change

The Exchange offers Users [5] connectivity to data feeds from third party markets and other content service providers (''Third Party Data Feeds'').[6] The list of Third Party Data Feeds is set forth in the Fee Schedule, and includes connectivity to the GIF for a monthly connectivity fee of $100.[7]

ICE, which publishes the GIF, announced to its customers that connect to the GIF that it will no longer offer the GIF as a stand-alone product. Accordingly, the Exchange proposes to cease offering connectivity to the GIF once it is no longer available. The Exchange has been informed by ICE that cessation is currently expected to occur before the end of 2020. The Exchange will announce the operative date through a customer notice.

Users are subject to a change fee if they request a change to one or more existing co-location services.[8] The Exchange proposes to waive any change fees that a User would otherwise incur as a result of the proposed change.

In order to implement the proposed change, the Exchange proposes to make the following changes to the section entitled ''Connectivity to Third Party Data Feeds'':

- In the first paragraph and in the table of Third Party Data Feeds, add an asterisk after ''ICE Data Global Index.''
- Following the table of Third Party Data Feeds, add the following text:

* ICE will cease to offer the GIF as a stand-alone product, which the Exchange has been informed by ICE is currently expected to occur before the end of 2020. The Exchange will announce the operative date through a customer notice. Any change fees that a User would otherwise incur as a result of the proposed change will be waived.

The GIF includes the values of various indices and exchange traded product data.[9] Based on information published by ICE Data Services, all the data in the GIF was already available on the ICE Data Services Consolidated Feed (''Consolidated Feed'').[10] The Exchange offers connectivity to the Consolidated Feed, and does not propose to change the price for such connectivity. In addition, the Exchange's connectivity to the GIF and the Consolidated Feed should have approximately the same latency.

Application and Impact of the Proposed Change

The proposed change would not apply differently to distinct types or sizes of market participants. Rather, it would apply to all Users equally. As is currently the case, the purchase of any colocation service is completely voluntary and the Fee Schedule is applied uniformly to all Users.

Currently, there are seven Users that have connectivity to the GIF, and so would be affected by the change. If any of them wish to continue having connectivity to the information in the GIF, they could connect to the Consolidated Feed, which none of them do presently. The monthly cost for connectivity to the Consolidated Feed depends on the size of the bandwidth utilized. If a User opts to connect to the Consolidated Feed to connect to the information in the GIF, the monthly connectivity cost charged by the Exchange would be $200.

ICE has informed the Exchange that currently there are various third parties that offer Users connectivity to the Consolidated Feed. To use such third party connectivity to the Consolidated Feed, a User may utilize the IDS network, a third party telecommunication network, a cross connect, or a combination thereof to access the Consolidated Feed through a connection to an access center outside the data center (which could be an IDS access center, a third-party access center, or both), another User, or a third party vendor.

Competitive Environment

The Exchange operates in a highly competitive market in which exchanges and other vendors (*e.g.,* Hosting Users) offer co-location services as a means to facilitate the trading and other market activities of those market participants who believe that co-location enhances the efficiency of their operations. The Commission has repeatedly expressed its preference for competition over regulatory intervention in determining prices, products, and services in the securities markets. Specifically, in Regulation NMS, the Commission highlighted the importance of market forces in determining prices and SRO revenues and, also, recognized that current regulation of the market system ''has been remarkably successful in promoting market competition in its

[4] The Exchange initially filed rule changes relating to its co-location services with the Securities and Exchange Commission (''Commission'') in October 2019. *See* Securities Exchange Act Release No. 87408 (October 28, 2019), 84 FR 58778 (November 1, 2019) (SR–NYSECHX–2019–27[sic]). The Exchange is an indirect subsidiary of Intercontinental Exchange, Inc. (''ICE''). Through its ICE Data Services (''IDS'') business, ICE operates a data center in Mahwah, New Jersey (the ''data center''), from which the Exchange provides co-location services to Users.

[5] For purposes of the Exchange's co-location services, a ''User'' means any market participant that requests to receive co-location services directly from the Exchange. *See id.,* at note 6. As specified in the Fee Schedule, a User that incurs co-location fees for a particular co-location service pursuant thereto would not be subject to co-location fees for the same co-location service charged by the Exchange's affiliates the New York Stock Exchange LLC, NYSE American LLC, NYSE Arca, Inc., and NYSE National, Inc. (collectively, the ''Affiliate SROs''). Each Affiliate SRO has submitted substantially the same proposed rule change to propose the changes described herein. *See* SR–NYSE–2020–46, SR–NYSEAmer–2020–40, SR–NYSEArca–2020–49, and SR–NYSENAT–2020–19.

[6] *See id.,* at 58787–58788.

[7] The Exchange has an indirect interest in the GIF because ICE is the Exchange's ultimate parent. *See id.,* at note 5.

[8] *See id.,* at 58785.

[9] The Exchange understands that some of the indices may include Exchange or Affiliate SRO data as underlying components, but the GIF does not include those underlying components or other information directly from the Exchange and Affiliate SROs.

[10] *See* ''Consolidated Data Feed Coverage List—Indices and Indicators'' at *https://www.theice.com/market-data/connectivity-and-feeds/consolidated-feed/coverage-list.*

broader forms that are most important to investors and listed companies.'' [11]

The proposed change is not otherwise intended to address any other issues relating to co-location services and/or related fees, and the Exchange is not aware of any problems that Users would have in complying with the proposed change.

2. Statutory Basis

The Exchange believes that the proposed rule change is consistent with Section 6(b) of the Act,[12] in general, and furthers the objectives of Sections 6(b)(4) and (5) of the Act,[13] in particular, because it provides for the equitable allocation of reasonable dues, fees, and other charges among its members, issuers and other persons using its facilities and does not unfairly discriminate between customers, issuers, brokers or dealers. In addition, it is designed to foster cooperation and coordination with persons engaged in regulating, clearing, settling, processing information with respect to, and facilitating transactions in securities, to remove impediments to, and perfect the mechanisms of, a free and open market and a national market system and, in general, to protect investors and the public interest and because it is not designed to permit unfair discrimination between customers, issuers, brokers, or dealers.

The Proposed Rule Change Is Reasonable and Equitable

The Exchange believes that the proposed rule change is reasonable and equitable for the following reasons.

The Exchange believes that it is reasonable and an equitable allocation of its fees and credits to add a note to its Fee Schedule stating that ICE will cease to offer the GIF as a stand-alone product, as the Exchange will no longer be able to offer the service once that occurs.

If a User wishes connectivity to the information in the GIF, the Users could connect to the Consolidated Feed through IDS or from a third party provider. A User may utilize the IDS network, a third party telecommunication network, a cross connect, or a combination thereof to access the Consolidated Feed, through a connection to an access center outside the data center (which could be an IDS access center, a third-party access center, or both), another User, or a third party vendor.

The Exchange believes that it is reasonable and equitable that it waive any change fees that a User would otherwise incur as a result of the proposed change, as Users would have no choice but to terminate connectivity to the GIF. The fee waiver would help to alleviate any burden related to the change.

The Proposed Rule Change Would Protect Investors and the Public Interest

The Exchange believes that the proposed rule change would perfect the mechanisms of a free and open market and a national market system and, in general, protect investors and the public interest for the following reasons.

It would be against the protection of investors and the public interest if the Exchange were to continue to offer something that it cannot provide because the relevant feed has been discontinued. Adding the proposed note to its Fee Schedule would reduce any potential ambiguity and provide clarification concerning the availability and the costs of connectivity to Third Party Data Feeds available to Users, because it would highlight that the GIF will become obsolete, provide a timeline for the change, and state that any change fees that a User would otherwise incur as a result of the proposed change would be waived.

The Proposed Change Is Not Unfairly Discriminatory

The Exchange believes that the proposed change is not unfairly discriminatory for the following reasons.

The proposed change would not apply differently to distinct types or sizes of market participants. Rather, it would apply to all Users equally. As a consequence of ICE's ceasing to offer the GIF as a stand-alone product, the Exchange will not be able to provide any Users with connectivity to the GIF.

If a User wishes connectivity to the information in the GIF, the Users could connect to the Consolidated Feed through the Exchange. If any of the seven Users that have connectivity to the GIF opt to connect to the Consolidated Feed, the monthly connectivity cost charged by the Exchange would be $200.

ICE has informed the Exchange that currently there are various third parties that offer Users connectivity to the Consolidated Feed. To use such third party connectivity to the Consolidated Feed, a User may utilize the IDS network, a third party telecommunication network, a cross connect, or a combination thereof to access the Consolidated Feed, through a connection to an access center outside the data center (which could be an IDS access center, a third-party access center, or both), another User, or a third party vendor.

For the reasons above, the proposed changes do not unfairly discriminate between or among market participants that are otherwise capable of satisfying any applicable co-location fees, requirements, terms and conditions established from time to time by the Exchange.

For these reasons, the Exchange believes that the proposal is consistent with the Act.

B. Self-Regulatory Organization's Statement on Burden on Competition

In accordance with Section 6(b)(8) of the Act,[14] the Exchange believes that the proposed rule change will not impose any burden on competition that is not necessary or appropriate in furtherance of the purposes of the Act.

Intramarket Competition

The Exchange does not believe that the proposed change would place any burden on intramarket competition that is not necessary or appropriate. The proposed change would not apply differently to distinct types or sizes of market participants. Rather, it would apply to all Users equally: As a consequence of ICE's ceasing to offer the GIF as a stand-alone product, the Exchange will not be able to provide any Users with connectivity to the GIF. The Exchange proposes to waive any change fees that a User would otherwise incur as a result of the proposed change.

Adding the proposed note to the Fee Schedule would reduce any potential ambiguity and provide clarification concerning the availability and the costs of connectivity to Third Party Data Feeds available to Users, because it would highlight that the GIF will become obsolete, provide a timeline for the change, and state that any change fees that a User would otherwise incur as a result of the proposed change would be waived.

If a User wishes connectivity to the information in the GIF, the Users could connect to the Consolidated Feed through the Exchange. If any of the seven Users that have connectivity to the GIF opt to connect to the Consolidated Feed, the monthly connectivity cost charged by the Exchange would be $200.

ICE has informed the Exchange that currently there are various third parties that offer Users connectivity to the Consolidated Feed. To use such third

[11] *See* Securities Exchange Act Release No. 51808 (June 9, 2005), 70 FR 37496, 37499 (June 29, 2005).

[12] 15 U.S.C. 78f(b).

[13] 15 U.S.C. 78f(b)(4) and (5).

[14] 15 U.S.C. 78f(b)(8).

party connectivity to the Consolidated Feed, a User may utilize the IDS network, a third party telecommunication network, a cross connect, or a combination thereof to access the Consolidated Feed, through a connection to an access center outside the data center (which could be an IDS access center, a third-party access center, or both), another User, or a third party vendor.

Use of any co-location service is completely voluntary, and each market participant is able to determine whether to use co-location services based on the requirements of its business operations.

Intermarket Competition

The Exchange does not believe that the proposed fee would impose any burden on intermarket competition that is not necessary or appropriate.

The Exchange operates in a highly competitive market in which exchanges and other vendors (*i.e.,* Hosting Users) offer co-location services as a means to facilitate the trading and other market activities of those market participants who believe that co-location enhances the efficiency of their operations. Accordingly, fees charged for co-location services are constrained by the active competition for the order flow of, and other business from, such market participants.

The Commission has repeatedly expressed its preference for competition over regulatory intervention in determining prices, products, and services in the securities markets. Specifically, in Regulation NMS, the Commission highlighted the importance of market forces in determining prices and SRO revenues and, also, recognized that current regulation of the market system ''has been remarkably successful in promoting market competition in its broader forms that are most important to investors and listed companies.'' [15]

The Exchange believes that the proposed change is necessary and appropriate. Adding the proposed note to the Fee Schedule would reduce any potential ambiguity and provide clarification concerning the availability and the costs of connectivity to Third Party Data Feeds available to Users, because it would highlight that the GIF will become obsolete and provide a timeline for the change.

For the reasons described above, the Exchange believes that the proposed rule change reflects this competitive environment.

[15] *See* 70 FR 37496, *supra* note 11.

C. Self-Regulatory Organization's Statement on Comments on the Proposed Rule Change Received From Members, Participants, or Others

No written comments were solicited or received with respect to the proposed rule change.

III. Date of Effectiveness of the Proposed Rule Change and Timing for Commission Action

The Exchange has filed the proposed rule change pursuant to Section 19(b)(3)(A)(iii) of the Act [16] and Rule 19b–4(f)(6) thereunder.[17] Because the proposed rule change does not: (i) Significantly affect the protection of investors or the public interest; (ii) impose any significant burden on competition; and (iii) become operative prior to 30 days from the date on which it was filed, or such shorter time as the Commission may designate, if consistent with the protection of investors and the public interest, the proposed rule change has become effective pursuant to Section 19(b)(3)(A) of the Act and Rule 19b–4(f)(6)(iii) thereunder.

A proposed rule change filed under Rule 19b–4(f)(6) [18] normally does not become operative prior to 30 days after the date of the filing. However, pursuant to Rule 19b–4(f)(6)(iii),[19] the Commission may designate a shorter time if such action is consistent with the protection of investors and the public interest. The Exchange has requested that the Commission waive the 30-day operative delay so that the proposal may become operative immediately upon filing. The Exchange believes that such waiver would be consistent with the protection of investors and the public interest because it would allow the Exchange to waive the change fee sooner. The Commission believes that waiving the 30-day operative delay is consistent with the protection of investors and the public interest because it would permit the Exchange, without undue delay, to cease offering the GIF when it becomes unavailable, provide notice to customers and waive the change fee. Accordingly, the Commission waives the 30-day operative delay and designates the proposed rule change operative upon filing.[20]

At any time within 60 days of the filing of such proposed rule change, the Commission summarily may temporarily suspend such rule change if it appears to the Commission that such action is necessary or appropriate in the public interest, for the protection of investors, or otherwise in furtherance of the purposes of the Act. If the Commission takes such action, the Commission shall institute proceedings under Section 19(b)(2)(B) [21] of the Act to determine whether the proposed rule change should be approved or disapproved.

[16] 15 U.S.C. 78s(b)(3)(A)(iii).

[17] 17 CFR 240.19b–4(f)(6).

[18] 17 CFR 240.19b–4(f)(6).

[19] 17 CFR 240.19b–4(f)(6)(iii).

[20] For purposes only of waiving the 30-day operative delay, the Commission has considered the proposed rule's impact on efficiency, competition, and capital formation. *See* 15 U.S.C. 78c(f).

IV. Solicitation of Comments

Interested persons are invited to submit written data, views, and arguments concerning the foregoing, including whether the proposed rule change is consistent with the Act. Comments may be submitted by any of the following methods:

Electronic Comments

- Use the Commission's internet comment form (*http://www.sec.gov/rules/sro.shtml*); or
- Send an email to *rule-comments@sec.gov.* Please include File Number SR–NYSECHX–2020–17 on the subject line.

Paper Comments

- Send paper comments in triplicate to Secretary, Securities and Exchange Commission, 100 F Street NE, Washington, DC 20549–1090.

All submissions should refer to File Number SR–NYSECHX–2020–17. This file number should be included on the subject line if email is used. To help the Commission process and review your comments more efficiently, please use only one method. The Commission will post all comments on the Commission's internet website (*http://www.sec.gov/rules/sro.shtml*). Copies of the submission, all subsequent amendments, all written statements with respect to the proposed rule change that are filed with the Commission, and all written communications relating to the proposed rule change between the Commission and any person, other than those that may be withheld from the public in accordance with the provisions of 5 U.S.C. 552, will be available for website viewing and printing in the Commission's Public Reference Room, 100 F Street NE, Washington, DC 20549 on official business days between the hours of 10:00 a.m. and 3:00 p.m. Copies of the filing also will be available for inspection and copying at the principal office of the Exchange. All comments

[21] 15 U.S.C. 78s(b)(2)(B).

received will be posted without change. Persons submitting comments are cautioned that we do not redact or edit personal identifying information from comment submissions. You should submit only information that you wish to make available publicly. All submissions should refer to File Number SR–NYSECHX–2020–17 and should be submitted on or before June 29, 2020.

For the Commission, by the Division of Trading and Markets, pursuant to delegated authority.[22]

J. Matthew DeLesDernier,

Assistant Secretary.

[FR Doc. 2020–12274 Filed 6–5–20; 8:45 am]

BILLING CODE 8011–01–P

[22] 17 CFR 200.30–3(a)(12).

SECURITIES AND EXCHANGE COMMISSION

[Release No. 34–88992; File No. SR–PEARL–2020–06]

Self-Regulatory Organizations; MIAX PEARL, LLC; Notice of Filing and Immediate Effectiveness of a Proposed Rule Change To Amend Exchange Rule 404, Series of Option Contracts Open for Trading, and Rule 510, Minimum Price Variations and Minimum Trading Increments, To Conform the Rules to Section 3.1 of the Plan for the Purpose of Developing and Implementing Procedures Designed To Facilitate the Listing and Trading of Standardized Options

June 2, 2020.

Pursuant to the provisions of Section 19(b)(1) of the Securities Exchange Act of 1934 (''Act'')[1] and Rule 19b–4 thereunder,[2] notice is hereby given that on May 29, 2020, MIAX PEARL, LLC (''MIAX PEARL'' or the ''Exchange'') filed with the Securities and Exchange Commission (''Commission'') a proposed rule change as described in Items I, II, and III below, which Items have been prepared by the Exchange. The Commission is publishing this notice to solicit comments on the proposed rule change from interested persons.

I. Self-Regulatory Organization's Statement of the Terms of Substance of the Proposed Rule Change

The Exchange is filing a proposal to amend certain of the Exchange's rules to conform to Section 3.1 of the Plan for the Purpose of Developing and Implementing Procedures Designed to Facilitate the Listing and Trading of Standardized Options (the ''OLPP'') and add new subparagraphs (a)(3)(i)–(iii) and (c) to Exchange Rule 510.

The text of the proposed rule change is available on the Exchange's website at *http://www.miaxoptions.com/rule-filings/pearl* at MIAX PEARL's principal office, and at the Commission's Public Reference Room.

II. Self-Regulatory Organization's Statement of the Purpose of, and Statutory Basis for, the Proposed Rule Change

In its filing with the Commission, the Exchange included statements concerning the purpose of and basis for the proposed rule change and discussed any comments it received on the proposed rule change. The text of these statements may be examined at the places specified in Item IV below. The Exchange has prepared summaries, set forth in sections A, B, and C below, of the most significant aspects of such statements.

A. Self-Regulatory Organization's Statement of the Purpose of, and Statutory Basis for, the Proposed Rule Change

1. Purpose

The purpose of this rule change is to amend Exchange Rule 404, Series of Option Contracts Open for Trading, and Exchange Rule 510, Minimum Price Variations and Minimum Trading Increments, to align the Exchange's rules with the recently approved amendment to the OLPP.

Background

On January 23, 2007, the Commission approved on a limited basis a Penny Pilot in option classes in certain issues (''Penny Pilot''). The Penny Pilot was designed to determine whether investors would benefit from options being quoted in penny increments, and in which classes the benefits were most significant. The Penny Pilot was initiated at the then existing option exchanges in January 2007[3] and expanded and extended numerous times over the last 13 years.[4] In each instance, these approvals relied upon the consideration of data periodically provided by the Exchanges that analyzed how quoting options in penny increments affects spreads, liquidity, quote traffic, and volume. Today, the Penny Pilot includes 363 option classes, which are among the most actively traded, multiply listed option classes. The Penny Pilot is scheduled to expire by its own terms on June 30, 2020.[5]

In light of the imminent expiration of the Penny Pilot, on June 30, 2020, the Exchange, together with other participating exchanges, filed on July 18, 2019, a proposal to amend the OLPP.[6] On April 1, 2020, the U.S. Securities and Exchange Commission (''Commission'') approved the amendment to the OLPP to make permanent the Pilot Program (the ''OLPP Program'').[7]

The OLPP Program replaces the Penny Pilot by instituting a permanent program that would permit quoting in penny increments for certain option classes. Under the terms of the OLPP Program, designated option classes would continue to be quoted in $0.01 and $0.05 increments according to the same parameters for the Penny Pilot. In addition, the OLPP Program would: (i) Establish an annual review process to add option classes to, or to remove option classes from, the OLPP Program; (ii) allow an option class to be added to the OLPP Program if it is a newly listed option class and it meets certain criteria; (iii) allow an option class to be added to the OLPP Program if it is an option class that has seen significant growth in activity; (iv) provide that if a corporate action involves one or more option classes in the OLPP Program, all adjusted and unadjusted series and classes emerging as a result of the corporate action will be included in the OLPP Program; and (v) provide that any series in an option class participating in the OLPP Program that have been delisted, or are identified by OCC as ineligible for opening Customer transactions, will continue to trade pursuant to the OLPP Program until they expire.

[1] 15 U.S.C. 78s(b)(1).

[2] 17 CFR 240.19b–4.

[3] *See* Securities Exchange Act Release Nos. 55154 (January 23, 2007), 72 FR 4743 (February 1, 2007) (SR–CBOE–2006–92); 55161 (January 24, 2007), 72 FR 4754 (February 1, 2007) (SR–ISE–2006–62); 54886 (December 6, 2006), 71 FR 74979 (December 13, 2006) (SR–Phlx–2006–74); 54590 (October 12, 2006), 71 FR 61525 (October 18, 2006) (SR–NYSEArca–2006–73); and 54741 (November 9, 2006), 71 FR 67176 (November 20, 2006) (SR–Amex–2006–106).

[4] *See* Securities Exchange Act Release Nos. 87609 (November 25, 2019), 84 FR 66032 (December 2, 2019) (SR–PEARL–2019–34); 86049 (June 6, 2019), 84 FR 27381 (June 12, 2019) (SR–PEARL–2019–20); 84865 (December 19, 2018), 83 FR 66813 (December 27, 2018) (SR–PEARL–2018–26); 83517 (June 25, 2018), 83 FR 30792 (June 29, 2018) (SR–PEARL–2018–14); 82391 (December 22, 2017), 82 FR 61622 (December 28, 2017) (SR–PEARL–2017–39); 80758 (May 24, 2017), 82 FR 25022 (May 31, 2017) (SR–PEARL–2017–24); and 79778 (January 12, 2016), 82 FR 6662 (January 19, 2017) (SR–PEARL–2016–01).

[5] *See* Securities Exchange Act Release No. 87609 (November 25, 2019), 84 FR 66032 (December 2, 2019) (SR–PEARL–2019–34).

[6] *See* Securities Exchange Act Release No. 87681 (December 9, 2019), 84 FR 68960 (December 17, 2019) (''Notice'').

[7] *See* Securities Exchange Act Release No. 88532 (April 1, 2020), 85 FR 19545 (April 7, 2020) (File No. 4–443) (''Approval Order'').

To conform its rules with the OLPP Program, the Exchange proposes to delete Interpretation and Policy .01 to Exchange Rule 510 (the ''Penny Pilot Rule''), which will be ''Reserved,'' and replace it with new Exchange Rule 510(c) (Requirements for Penny Interval Program), which is described below, and to replace references to the ''Penny Pilot'' in several Exchange rules with ''Penny Interval Program.''

The Exchange also proposes to amend Exchange Rule 510, Minimum Price Variations and Minimum Trading Increments, to adopt subparagraphs (a)(3)(i)–(iii) to conform the Exchange's rules regarding minimum price variations for options in the proposed Penny Interval Program with similar rules of other option exchanges.[8] In particular, the Exchange proposes to adopt subparagraph (a)(3)(i)–(iii), which will describe that for options contracts traded pursuant to the proposed Penny Interval Program (which the Exchange has proposed as new Exchange Rule 510(c)): (i) All option contracts in QQQ, SPY and IWM will quote in a minimum of one cent ($0.01) price variations; (ii) for all other option contracts included in the Penny Interval Program that are trading at less than $3, those option contracts will quote in a minimum of one cent ($0.01) price variations; and (iii) for all other option contracts included in the Penny Interval Program that are trading at or above $3, those option contracts will quote in a minimum of five cents ($0.05) price variations. The Exchange notes that the Commission previously approved minimum quoting increments of one cent ($0.01) for all option contracts in QQQ, IWM and SPY, regardless of price, over the course of the expansion of the Penny Pilot rules.[9] Accordingly, the Exchange proposes to align its rules regarding minimum price variations for option contracts in the Penny Interval Program with other option exchanges.

Penny Interval Program

The Exchange proposes to codify the OLPP Program in new Exchange Rule 510(c) (Requirements for Penny Interval Program) (the ''Penny Program''), which will replace the Penny Pilot Rule and permanently permit the Exchange to quote certain option classes in minimum increments of one cent ($0.01) and five cents ($0.05) (''penny increments''). The penny increments that currently apply under the Penny Pilot will continue to apply for option classes included in the Penny Program. Specifically, (i) the minimum quoting increment for all series in the QQQ, SPY, and IWM would continue to be $0.01, regardless of price (which the Exchange proposes to codify in proposed Exchange Rule 510(a)(3)(i)–(iii)); (ii) all series of an option class included in the Penny Program with a price of less than $3.00 would be quoted in $0.01 increments; and (iii) all series of an option class included in the Penny Program with a price of $3.00 or higher would be quoted in $0.05 increments.[10]

The Penny Program would initially apply to the 363 most actively traded multiply listed option classes, based on National Cleared Volume at The Options Clearing Corporation (''OCC'') in the six full calendar months ending in the month of approval (*i.e.,* November 2019–April 2020) that currently quote in penny increments, or overlie securities priced below $200, or any index at an index level below $200. Eligibility for inclusion in the Penny Program will be determined at the close of trading on the monthly Expiration Friday of the second full month following April 1, 2020 (*i.e.,* June 19, 2020).

Once in the Penny Program, an option class will remain included until it is no longer among the 425 most actively traded option classes at the time the annual review is conducted (described below), at which point it will be removed from the Penny Program. As described in more detail below, the removed class will be replaced by the next most actively traded multiply listed option class overlying securities priced below $200 per share, or any index at an index level below $200, and not yet in the Penny Program. Advanced notice regarding the option classes included, added, or removed from the Penny Program will be provided to the Exchange's Members via Regulatory Circular and published by the Exchange on its website.

Annual Review

The Penny Program would include an annual review process that applies objective criteria to determine option classes to be added to, or removed from, the Penny Program. Specifically, on an annual basis beginning in December 2020 and occurring every December thereafter, the Exchange will review and rank all multiply listed option classes based on National Cleared Volume at OCC for the six full calendar months from June 1st through November 30th for determination of the most actively traded option classes. Any option classes not yet in the Penny Program may be added to the Penny Program if the class is among the 300 most actively traded multiply listed option classes and priced below $200 per share, or any index at an index level below $200.

Following the annual review, option classes to be added to the Penny Program would begin quoting in penny increments (*i.e.,* $0.01 if trading at less than $3.00; and $0.05 if trading at $3.00 and above) on the first trading day of January. In addition, following the annual review, any option class in the Penny Program that falls outside of the 425 most actively traded option classes would be removed from the Penny Program. After the annual review, option classes that are removed from the Penny Program will be subject to the minimum trading increments set forth in Exchange Rule 510, effective on the first trading day of April.

Changes to the Composition of the Penny Program Outside of the Annual Review Newly Listed Option Classes and Option Classes With Significant Growth in Activity

The Penny Program would specify a process and parameters for including option classes in the Penny Program outside the annual review process in two circumstances. These provisions are designed to provide objective criteria to add to the Penny Program new option classes in issues with the most demonstrated trading interest from market participants and investors on an expedited basis prior to the annual review, with the benefit that market participants and investors will then be able to trade these new option classes based upon quotes expressed in finer trading increments.

First, the Penny Program provides for certain newly listed option classes to be added to the Penny Program outside of the annual review process, provided that (i) the class is among the 300 most actively traded, multiply listed option classes, as ranked by National Cleared Volume at OCC, in its first full calendar month of trading and (ii) the underlying security is priced below $200 or the underlying index is at an index level below $200. Such newly listed option classes added to the Penny Program pursuant to this process would remain in the Penny Program for one full calendar year and then would be subject to the annual review process.

[8] *See* NYSE Arca Rule 6.72–O (Trading Differentials); *see also* Nasdaq Stock Market, Options 3, Section 3, Supplementary Material .01.

[9] *See* Securities Exchange Act Release Nos. 55156 (January 23, 2007), 72 FR 4759 (February 1, 2007) (SR–NYSEArca–2006–73) (Order Granting Approval to Proposed rule Change as Modified by Amendment No. 1 Thereto, To Create an Options Penny Pilot Program); 61061 (November 24, 2009), 74 FR 62857 (December 1, 2009) (SR–NYSEArca–2009–44) (Order Granting Partial Approval of a Proposed Rule Change, as Modified by Amendment No. 4 Thereto, Expanding the Penny Pilot Program).

[10] *See* proposed Exchange Rule 510(a)(3)(i)–(iii).

Second, the Penny Program would allow an option class to be added to the Penny Program outside of the annual review process if it is an option class that meets certain specific criteria. Specifically, new option classes may be added to the Penny Program if: (i) The option class is among the 75 most actively traded multiply listed option classes, as ranked by National Cleared Volume at OCC, in the prior six full calendar months of trading and (ii) the underlying security is priced below $200 or the underlying index is at an index level below $200. Any option class added under this provision will be added on the first trading day of the second full month after it qualifies and will remain in the Penny Program for the rest of the calendar year, after which it will be subject to the annual review process.

Corporate Actions

The Penny Program would also specify a process to address option classes in the Penny Program that undergo a corporate action and is designed to ensure continuous liquidity in the affected option classes. Specifically, if a corporate action involves one or more option classes in the Penny Program, all adjusted and unadjusted series of an option class would continue to be included in the Penny Program.[11] Furthermore, neither the trading volume threshold, nor the initial price test would apply to option classes added to the Penny Program as a result of the corporate action. Finally, the newly added adjusted and unadjusted series of the option class would remain in the Penny Program for one full calendar year and then would become subject to the annual review process.

Delisted or Ineligible Option Classes

Finally, the Penny Program would provide a mechanism to address option classes that have been delisted or those that are no longer eligible for listing. Specifically, any series in an option class participating in the Penny Program in which the underlying has been delisted, or is identified by OCC as ineligible for opening customer transactions, would continue to quote pursuant to the terms of the Penny Program until all options series have expired.

[11] For example, if Company A acquires Company B and Company A is not in the Penny Program but Company B is in the Penny Program, once the merger is consummated and an options contract adjustment is effective, then Company A would be added to the Penny Program and remain in the Penny Program for one calendar year.

Technical Changes

The Exchange proposes to replace references to the Penny Pilot with the new reference to the Penny Interval Program. These proposed changes would be to Penny Pilot references in Exchange Rule 404, Interpretation and Policy .08(d). The Exchange believes these technical changes would add clarity, transparency and internal consistency to the Exchange's rules making them easier for market participants to navigate.

Implementation

This proposed rule change will become operative on July 1, 2020, upon expiration of the current Penny Pilot on June 30, 2020. The Exchange proposes to implement the Penny Program on July 1, 2020, which is the first trading day of the third month following the Approval Order issued on April 1, 2020—*i.e.,* July 1, 2020.

2. Statutory Basis

The Exchange believes that its proposed rule change is consistent with Section 6(b) of the Act[12] in general, and furthers the objectives of Section 6(b)(5) of the Act[13] in particular, in that it is designed to prevent fraudulent and manipulative acts and practices, to promote just and equitable principles of trade, to foster cooperation and coordination with persons engaged in facilitating transactions in securities, to remove impediments to and perfect the mechanisms of a free and open market and a national market system and, in general, to protect investors and the public interest.

In particular, the proposed rule change, which conforms the Exchange rules to the recently adopted OLPP Program, allows the Exchange to provide market participants with a permanent Penny Program for quoting options in penny increments, which maximizes the benefit of quoting in a finer quoting increment to investors while minimizing the burden that a finer quoting increment places on quote traffic.

Accordingly, the Exchange believes that the proposal is consistent with the Act because, in conforming the Exchange rules to the OLPP Program, the Penny Program would employ processes, based upon objective criteria, that would rebalance the composition of the Penny Program, thereby helping to ensure that the most actively traded option classes are included in the Penny Program, which helps facilitate the maintenance of a fair and orderly market.

[12] 15 U.S.C. 78f(b).

[13] 15 U.S.C. 78f(b)(5).

Technical Changes

The Exchange notes that the proposed changes to Exchange Rule 404, Interpretation and Policy .08(d), to replace references to the Penny Pilot with references to the Penny Interval Program would provide clarity and transparency to the Exchange rules and would promote just and equitable principles of trade and remove impediments to, and perfect the mechanism of, a free and open market and a national market system. The proposed rule changes would also provide internal consistency within Exchange rules and operate to protect investors and the investing public by making the Exchange rules easier to navigate and comprehend.

B. Self-Regulatory Organization's Statement on Burden on Competition

The Exchange does not believe that the proposed rule change will impose any burden on competition that is not necessary or appropriate in furtherance of the purposes of the Act. The proposed Penny Program, which modifies the Exchange's rules to align them with the Commission approved OLPP Program, is not designed to be a competitive filing nor does it impose an undue burden on intermarket competition as the Exchange anticipates that the options exchanges will adopt substantially identical rules. Moreover, the Exchange believes that by conforming Exchange rules to the OLPP Program, the Exchange would promote regulatory clarity and consistency, thereby reducing burdens on the marketplace and facilitating investor protection. To the extent that there is a competitive burden on those option classes that do not qualify for the Penny Program, the Exchange believes that it is appropriate because the proposal should benefit all market participants and investors by maximizing the benefit of a finer quoting increment in those option classes with the most trading interest while minimizing the burden of greater quote traffic in option classes with less trading interest. The Exchange believes that adopting rules, which it anticipates will likewise be adopted by all option exchanges that are participants in the OLPP, would allow for continued competition between Exchange market participants trading similar products as their counterparts on other exchanges, while at the same time allowing the Exchange to continue to compete for order flow with other exchanges.

C. Self-Regulatory Organization's Statement on Comments on the Proposed Rule Change Received From Members, Participants, or Others

Written comments were neither solicited nor received.

III. Date of Effectiveness of the Proposed Rule Change and Timing for Commission Action

Because the foregoing proposed rule change does not: (i) Significantly affect the protection of investors or the public interest; (ii) impose any significant burden on competition; and (iii) become operative for 30 days after the date of the filing, or such shorter time as the Commission may designate, it has become effective pursuant to 19(b)(3)(A) of the Act [14] and Rule 19b–4(f)(6) [15] thereunder.

At any time within 60 days of the filing of the proposed rule change, the Commission summarily may temporarily suspend such rule change if it appears to the Commission that such action is necessary or appropriate in the public interest, for the protection of investors, or otherwise in furtherance of the purposes of the Act. If the Commission takes such action, the Commission shall institute proceedings to determine whether the proposed rule should be approved or disapproved.

IV. Solicitation of Comments

Interested persons are invited to submit written data, views, and arguments concerning the foregoing, including whether the proposed rule change is consistent with the Act. Comments may be submitted by any of the following methods:

Electronic Comments

- Use the Commission's internet comment form (*http://www.sec.gov/rules/sro.shtml*); or
- Send an email to *rule-comments@sec.gov.* Please include File Number SR–PEARL–2020–06 on the subject line.

Paper Comments

- Send paper comments in triplicate to Vanessa Countryman, Secretary, Securities and Exchange Commission, 100 F Street NE, Washington, DC 20549–1090.

All submissions should refer to File Number SR–PEARL–2020–06. This file number should be included on the subject line if email is used. To help the Commission process and review your comments more efficiently, please use only one method. The Commission will post all comments on the Commission's internet website (*http://www.sec.gov/rules/sro.shtml*). Copies of the submission, all subsequent amendments, all written statements with respect to the proposed rule change that are filed with the Commission, and all written communications relating to the proposed rule change between the Commission and any person, other than those that may be withheld from the public in accordance with the provisions of 5 U.S.C. 552, will be available for website viewing and printing in the Commission's Public Reference Room, 100 F Street NE, Washington, DC 20549, on official business days between the hours of 10:00 a.m. and 3:00 p.m. All comments received will be posted without change. Persons submitting comments are cautioned that we do not redact or edit personal identifying information from comment submissions. You should submit only information that you wish to make available publicly. All submissions should refer to File Number SR–PEARL–2020–06 and should be submitted on or before June 29, 2020.

For the Commission, by the Division of Trading and Markets, pursuant to delegated authority.[16]

J. Matthew DeLesDernier,

Assistant Secretary.

[FR Doc. 2020–12275 Filed 6–5–20; 8:45 am]

BILLING CODE 8011–01–P

[14] 15 U.S.C. 78s(b)(3)(A).

[15] 17 CFR 240.19b–4(f)(6). In addition, Rule 19b–4(f)(6) requires a self-regulatory organization to give the Commission written notice of its intent to file the proposed rule change at least five business days prior to the date of filing of the proposed rule change, or such shorter time as designated by the Commission. The Exchange has satisfied this requirement.

[16] 17 CFR 200.30–3(a)(12).

SECURITIES AND EXCHANGE COMMISSION

[Release No. 34–88993; File No. SR–EMERALD–2020–05]

Self-Regulatory Organizations; MIAX Emerald, LLC; Notice of Filing and Immediate Effectiveness of a Proposed Rule Change To Amend Exchange Rule 510, Minimum Price Variations and Minimum Trading Increments, To Conform the Rule to Section 3.1 of the Plan for the Purpose of Developing and Implementing Procedures Designed To Facilitate the Listing and Trading of Standardized Options

June 2, 2020.

Pursuant to the provisions of Section 19(b)(1) of the Securities Exchange Act of 1934 (''Act'') [1] and Rule 19b–4 thereunder,[2] notice is hereby given that on May 29, 2020, MIAX Emerald, LLC (''MIAX Emerald'' or ''Exchange'') filed with the Securities and Exchange Commission (''Commission'') a proposed rule change as described in Items I, II, and III below, which Items have been prepared by the Exchange. The Commission is publishing this notice to solicit comments on the proposed rule change from interested persons.

I. Self-Regulatory Organization's Statement of the Terms of Substance of the Proposed Rule Change

The Exchange proposes to amend certain of the Exchange's rules to conform to Section 3.1 of the Plan for the Purpose of Developing and Implementing Procedures Designed to Facilitate the Listing and Trading of Standardized Options (the ''OLPP'') and add new subparagraphs (a)(3)(i)–(iii) and (b) to Exchange Rule 510.

The text of the proposed rule change is available on the Exchange's website at *http://www.miaxoptions.com/rule-filings/emerald* at MIAX Emerald's principal office, and at the Commission's Public Reference Room.

II. Self-Regulatory Organization's Statement of the Purpose of, and Statutory Basis for, the Proposed Rule Change

In its filing with the Commission, the Exchange included statements concerning the purpose of and basis for the proposed rule change and discussed any comments it received on the proposed rule change. The text of these statements may be examined at the places specified in Item IV below. The Exchange has prepared summaries, set

[1] 15 U.S.C. 78s(b)(1).

[2] 17 CFR 240.19b–4.

forth in sections A, B, and C below, of the most significant aspects of such statements.

A. Self-Regulatory Organization's Statement of the Purpose of, and Statutory Basis for, the Proposed Rule Change

1. Purpose

The purpose of this rule change is to amend Exchange Rule 510, Minimum Price Variations and Minimum Trading Increments, to align the Exchange's rules with the recently approved amendment to the OLPP.

Background

On January 23, 2007, the Commission approved on a limited basis a Penny Pilot in option classes in certain issues (''Penny Pilot''). The Penny Pilot was designed to determine whether investors would benefit from options being quoted in penny increments, and in which classes the benefits were most significant. The Penny Pilot was initiated at the then existing option exchanges in January 2007 [3] and expanded and extended numerous times over the last 13 years.[4] In each instance, these approvals relied upon the consideration of data periodically provided by the Exchanges that analyzed how quoting options in penny increments affects spreads, liquidity, quote traffic, and volume. Today, the Penny Pilot includes 363 option classes, which are among the most actively traded, multiply listed option classes. The Penny Pilot is scheduled to expire by its own terms on June 30, 2020.[5]

In light of the imminent expiration of the Penny Pilot, on June 30, 2020, the Exchange, together with other participating exchanges, filed on July 18, 2019, a proposal to amend the OLPP.[6] On April 1, 2020, the U.S. Securities and Exchange Commission (''Commission'') approved the amendment to the OLPP to make permanent the Pilot Program (the ''OLPP Program'').[7]

The OLPP Program replaces the Penny Pilot by instituting a permanent program that would permit quoting in penny increments for certain option classes. Under the terms of the OLPP Program, designated option classes would continue to be quoted in $0.01 and $0.05 increments according to the same parameters for the Penny Pilot. In addition, the OLPP Program would: (i) Establish an annual review process to add option classes to, or to remove option classes from, the OLPP Program; (ii) allow an option class to be added to the OLPP Program if it is a newly listed option class and it meets certain criteria; (iii) allow an option class to be added to the OLPP Program if it is an option class that has seen significant growth in activity; (iv) provide that if a corporate action involves one or more option classes in the OLPP Program, all adjusted and unadjusted series and classes emerging as a result of the corporate action will be included in the OLPP Program; and (v) provide that any series in an option class participating in the OLPP Program that have been delisted, or are identified by OCC as ineligible for opening Customer transactions, will continue to trade pursuant to the OLPP Program until they expire.

To conform its rules with the OLPP Program, the Exchange proposes to delete Interpretation and Policy .01 to Exchange Rule 510 (the ''Penny Pilot Rule''), which will be ''Reserved,'' and replace it with new Exchange Rule 510(b) (Requirements for Penny Interval Program), which is described below.

The Exchange also proposes to amend Exchange Rule 510, Minimum Price Variations and Minimum Trading Increments, to amend the hierarchical heading scheme. Currently, Exchange Rule 510 only has subparagraphs (1) and (2). The Exchange now proposes that the first unnumbered paragraph of Exchange Rule 510 will be renumbered subparagraph (a), and subparagraphs (1) and (2) will be renumbered as subparagraphs (a)(1) and (a)(2). The purpose of this change is for uniformity and clarity throughout the Exchange's rulebook.

The Exchange also proposes to adopt subparagraphs (a)(3)(i)–(iii) to conform the Exchange's rules regarding minimum price variations for options in the proposed Penny Interval Program with similar rules of other option exchanges.[8] In particular, the Exchange proposes to adopt subparagraphs (a)(3)(i)–(iii), which will describe that for options contracts traded pursuant to the proposed Penny Interval Program (which the Exchange has proposed as new Exchange Rule 510(b)): (i) All option contracts in QQQ, SPY and IWM will quote in a minimum of one cent ($0.01) price variations; (ii) for all other option contracts included in the Penny Interval Program that are trading at less than $3, those option contracts will quote in a minimum of one cent ($0.01) price variations; and (iii) for all other option contracts included in the Penny Interval Program that are trading at or above $3, those option contracts will quote in a minimum of five cents ($0.05) price variations. The Exchange notes that the Commission previously approved minimum quoting increments of one cent ($0.01) for all option contracts in QQQ, IWM and SPY, regardless of price, over the course of the expansion of the Penny Pilot rules.[9] Accordingly, the Exchange proposes to align its rules regarding minimum price variations for option contracts in the Penny Interval Program with other option exchanges.

Penny Interval Program

The Exchange proposes to codify the OLPP Program in new Exchange Rule 510(b) (Requirements for Penny Interval Program) (the ''Penny Program''), which will replace the Penny Pilot Rule and permanently permit the Exchange to quote certain option classes in minimum increments of one cent ($0.01) and five cents ($0.05) (''penny increments''). The penny increments that currently apply under the Penny Pilot will continue to apply for option classes included in the Penny Program. Specifically, (i) the minimum quoting increment for all series in the QQQ, SPY, and IWM would continue to be $0.01, regardless of price (which the Exchange proposes to codify in proposed Exchange Rule 510(a)(3)(i)–(iii)); (ii) all series of an option class included in the Penny Program with a price of less than $3.00 would be quoted in $0.01 increments; and (iii) all series of an option class included in the Penny

[3] *See* Securities Exchange Act Release Nos. 55154 (January 23, 2007), 72 FR 4743 (February 1, 2007) (SR–CBOE–2006–92); 55161 (January 24, 2007), 72 FR 4754 (February 1, 2007) (SR–ISE–2006–62); 54886 (December 6, 2006), 71 FR 74979 (December 13, 2006) (SR–Phlx–2006–74); 54590 (October 12, 2006), 71 FR 61525 (October 18, 2006) (SR–NYSEArca–2006–73); and 54741 (November 9, 2006), 71 FR 67176 (November 20, 2006) (SR–Amex–2006–106).

[4] *See* Securities Exchange Act Release Nos. 85225 (March 1, 2019), 84 FR 8353 (March 7, 2019) (SR–EMERALD–2019–06); 86048 (June 6, 2019), 84 FR 27382 (June 12, 2019) (SR–EMERALD–2019–23); 87608 (November 25, 2019), 84 FR 66046 (December 2, 2019) (SR–EMERALD–2019–36).

[5] *See* Securities Exchange Act Release No. 87608 (November 25, 2019), 84 FR 66046 (December 2, 2019) (SR–EMERALD–2019–36).

[6] *See* Securities Exchange Act Release No. 87681 (December 9, 2019), 84 FR 68960 (December 17, 2019) (''Notice'').

[7] *See* Securities Exchange Act Release No. 88532 (April 1, 2020), 85 FR 19545 (April 7, 2020) (File No. 4–443) (''Approval Order'').

[8] *See* NYSE Arca Rule 6.72–O (Trading Differentials); *see also* Nasdaq Stock Market, Options 3, Section 3, Supplementary Material .01.

[9] *See* Securities Exchange Act Release Nos. 55156 (January 23, 2007), 72 FR 4759 (February 1, 2007) (SR–NYSEArca–2006–73) (Order Granting Approval to Proposed rule Change as Modified by Amendment No. 1 Thereto, To Create an Options Penny Pilot Program); 61061 (November 24, 2009), 74 FR 62857 (December 1, 2009) (SR–NYSEArca–2009–44) (Order Granting Partial Approval of a Proposed Rule Change, as Modified by Amendment No. 4 Thereto, Expanding the Penny Pilot Program).

Program with a price of $3.00 or higher would be quoted in $0.05 increments.[10]

The Penny Program would initially apply to the 363 most actively traded multiply listed option classes, based on National Cleared Volume at The Options Clearing Corporation (''OCC'') in the six full calendar months ending in the month of approval (*i.e.,* November 2019–April 2020) that currently quote in penny increments, or overlie securities priced below $200, or any index at an index level below $200. Eligibility for inclusion in the Penny Program will be determined at the close of trading on the monthly Expiration Friday of the second full month following April 1, 2020 (*i.e.,* June 19, 2020).

Once in the Penny Program, an option class will remain included until it is no longer among the 425 most actively traded option classes at the time the annual review is conducted (described below), at which point it will be removed from the Penny Program. As described in more detail below, the removed class will be replaced by the next most actively traded multiply listed option class overlying securities priced below $200 per share, or any index at an index level below $200, and not yet in the Penny Program. Advanced notice regarding the option classes included, added, or removed from the Penny Program will be provided to the Exchange's Members via Regulatory Circular and published by the Exchange on its website.

Annual Review

The Penny Program would include an annual review process that applies objective criteria to determine option classes to be added to, or removed from, the Penny Program. Specifically, on an annual basis beginning in December 2020 and occurring every December thereafter, the Exchange will review and rank all multiply listed option classes based on National Cleared Volume at OCC for the six full calendar months from June 1st through November 30th for determination of the most actively traded option classes. Any option classes not yet in the Penny Program may be added to the Penny Program if the class is among the 300 most actively traded multiply listed option classes and priced below $200 per share, or any index at an index level below $200.

Following the annual review, option classes to be added to the Penny Program would begin quoting in penny increments (*i.e.,* $0.01 if trading at less than $3.00; and $0.05 if trading at $3.00 and above) on the first trading day of January. In addition, following the annual review, any option class in the Penny Program that falls outside of the 425 most actively traded option classes would be removed from the Penny Program. After the annual review, option classes that are removed from the Penny Program will be subject to the minimum trading increments set forth in Exchange Rule 510, effective on the first trading day of April.

Changes to the Composition of the Penny Program Outside of the Annual Review Newly Listed Option Classes and Option Classes With Significant Growth in Activity

The Penny Program would specify a process and parameters for including option classes in the Penny Program outside the annual review process in two circumstances. These provisions are designed to provide objective criteria to add to the Penny Program new option classes in issues with the most demonstrated trading interest from market participants and investors on an expedited basis prior to the annual review, with the benefit that market participants and investors will then be able to trade these new option classes based upon quotes expressed in finer trading increments.

First, the Penny Program provides for certain newly listed option classes to be added to the Penny Program outside of the annual review process, provided that (i) the class is among the 300 most actively traded, multiply listed option classes, as ranked by National Cleared Volume at OCC, in its first full calendar month of trading and (ii) the underlying security is priced below $200 or the underlying index is at an index level below $200. Such newly listed option classes added to the Penny Program pursuant to this process would remain in the Penny Program for one full calendar year and then would be subject to the annual review process.

Second, the Penny Program would allow an option class to be added to the Penny Program outside of the annual review process if it is an option class that meets certain specific criteria. Specifically, new option classes may be added to the Penny Program if: (i) The option class is among the 75 most actively traded multiply listed option classes, as ranked by National Cleared Volume at OCC, in the prior six full calendar months of trading and (ii) the underlying security is priced below $200 or the underlying index is at an index level below $200. Any option class added under this provision will be added on the first trading day of the second full month after it qualifies and will remain in the Penny Program for the rest of the calendar year, after which it will be subject to the annual review process.

Corporate Actions

The Penny Program would also specify a process to address option classes in the Penny Program that undergo a corporate action and is designed to ensure continuous liquidity in the affected option classes. Specifically, if a corporate action involves one or more option classes in the Penny Program, all adjusted and unadjusted series of an option class would continue to be included in the Penny Program.[11] Furthermore, neither the trading volume threshold, nor the initial price test would apply to option classes added to the Penny Program as a result of the corporate action. Finally, the newly added adjusted and unadjusted series of the option class would remain in the Penny Program for one full calendar year and then would become subject to the annual review process.

Delisted or Ineligible Option Classes

Finally, the Penny Program would provide a mechanism to address option classes that have been delisted or those that are no longer eligible for listing. Specifically, any series in an option class participating in the Penny Program in which the underlying has been delisted, or is identified by OCC as ineligible for opening customer transactions, would continue to quote pursuant to the terms of the Penny Program until all options series have expired.

Implementation

This proposed rule change will become operative on July 1, 2020, upon expiration of the current Penny Pilot on June 30, 2020. The Exchange proposes to implement the Penny Program on July 1, 2020, which is the first trading day of the third month following the Approval Order issued on April 1, 2020—*i.e.,* July 1, 2020.

2. Statutory Basis

The Exchange believes that its proposed rule change is consistent with Section 6(b) of the Act[12] in general, and furthers the objectives of Section 6(b)(5) of the Act[13] in particular, in that it is

[10] *See* proposed Exchange Rule 510(a)(3)(i)–(iii).

[11] For example, if Company A acquires Company B and Company A is not in the Penny Program but Company B is in the Penny Program, once the merger is consummated and an options contract adjustment is effective, then Company A would be added to the Penny Program and remain in the Penny Program for one calendar year.

[12] 15 U.S.C. 78f(b).

[13] 15 U.S.C. 78f(b)(5).

designed to prevent fraudulent and manipulative acts and practices, to promote just and equitable principles of trade, to foster cooperation and coordination with persons engaged in facilitating transactions in securities, to remove impediments to and perfect the mechanisms of a free and open market and a national market system and, in general, to protect investors and the public interest.

In particular, the proposed rule change, which conforms the Exchange rules to the recently adopted OLPP Program, allows the Exchange to provide market participants with a permanent Penny Program for quoting options in penny increments, which maximizes the benefit of quoting in a finer quoting increment to investors while minimizing the burden that a finer quoting increment places on quote traffic.

Accordingly, the Exchange believes that the proposal is consistent with the Act because, in conforming the Exchange rules to the OLPP Program, the Penny Program would employ processes, based upon objective criteria, that would rebalance the composition of the Penny Program, thereby helping to ensure that the most actively traded option classes are included in the Penny Program, which helps facilitate the maintenance of a fair and orderly market.

The Exchange believes the proposed changes to the hierarchical heading scheme in Exchange Rule 510 promote just and equitable principles of trade and remove impediments to and perfect the mechanism of a free and open market and a national market system because the proposed rule changes provide uniformity in the Exchange's rulebook and do not alter the application of the rule. As such, the proposed changes would foster cooperation and coordination with persons engaged in facilitating transactions in securities and would remove impediments to and perfect the mechanism of a free and open market and a national exchange system by providing greater clarity to Members and the public regarding the Exchange's Rules. It is in the public interest for rules to be accurate and concise so as to eliminate the potential for confusion.

B. Self-Regulatory Organization's Statement on Burden on Competition

The Exchange does not believe that the proposed rule change will impose any burden on competition that is not necessary or appropriate in furtherance of the purposes of the Act. The proposed Penny Program, which modifies the Exchange's rules to align them with the Commission approved OLPP Program, is not designed to be a competitive filing nor does it impose an undue burden on intermarket competition as the Exchange anticipates that the options exchanges will adopt substantially identical rules. Moreover, the Exchange believes that by conforming Exchange rules to the OLPP Program, the Exchange would promote regulatory clarity and consistency, thereby reducing burdens on the marketplace and facilitating investor protection. To the extent that there is a competitive burden on those option classes that do not qualify for the Penny Program, the Exchange believes that it is appropriate because the proposal should benefit all market participants and investors by maximizing the benefit of a finer quoting increment in those option classes with the most trading interest while minimizing the burden of greater quote traffic in option classes with less trading interest. The Exchange believes that adopting rules, which it anticipates will likewise be adopted by all option exchanges that are participants in the OLPP, would allow for continued competition between Exchange market participants trading similar products as their counterparts on other exchanges, while at the same time allowing the Exchange to continue to compete for order flow with other exchanges.

C. Self-Regulatory Organization's Statement on Comments on the Proposed Rule Change Received From Members, Participants, or Others

Written comments were neither solicited nor received.

III. Date of Effectiveness of the Proposed Rule Change and Timing for Commission Action

Because the foregoing proposed rule change does not: (i) Significantly affect the protection of investors or the public interest; (ii) impose any significant burden on competition; and (iii) become operative for 30 days after the date of the filing, or such shorter time as the Commission may designate, it has become effective pursuant to 19(b)(3)(A) of the Act [14] and Rule 19b–4(f)(6) [15] thereunder.

At any time within 60 days of the filing of the proposed rule change, the Commission summarily may temporarily suspend such rule change if it appears to the Commission that such action is necessary or appropriate in the public interest, for the protection of investors, or otherwise in furtherance of the purposes of the Act. If the Commission takes such action, the Commission shall institute proceedings to determine whether the proposed rule should be approved or disapproved.

IV. Solicitation of Comments

Interested persons are invited to submit written data, views, and arguments concerning the foregoing, including whether the proposed rule change is consistent with the Act. Comments may be submitted by any of the following methods:

Electronic Comments

- Use the Commission's internet comment form (*http://www.sec.gov/rules/sro.shtml*); or
- Send an email to *rule-comments@sec.gov.* Please include File Number SR–EMERALD–2020–05 on the subject line.

Paper Comments

- Send paper comments in triplicate to Vanessa Countryman, Secretary, Securities and Exchange Commission, 100 F Street NE, Washington, DC 20549–1090.

All submissions should refer to File Number SR–EMERALD–2020–05. This file number should be included on the subject line if email is used. To help the Commission process and review your comments more efficiently, please use only one method. The Commission will post all comments on the Commission's internet website (*http://www.sec.gov/rules/sro.shtml*).

Copies of the submission, all subsequent amendments, all written statements with respect to the proposed rule change that are filed with the Commission, and all written communications relating to the proposed rule change between the Commission and any person, other than those that may be withheld from the public in accordance with the provisions of 5 U.S.C. 552, will be available for website viewing and printing in the Commission's Public Reference Room, 100 F Street NE, Washington, DC 20549, on official business days between the hours of 10:00 a.m. and 3:00 p.m. Copies of the filing also will be available for inspection and copying at the principal office of the Exchange. All comments received will be posted without change. Persons submitting comments are cautioned that we do not redact or edit

[14] 15 U.S.C. 78s(b)(3)(A).

[15] 17 CFR 240.19b–4(f)(6). In addition, Rule 19b–4(f)(6) requires a self-regulatory organization to give the Commission written notice of its intent to file the proposed rule change at least five business days prior to the date of filing of the proposed rule change, or such shorter time as designated by the Commission. The Exchange has satisfied this requirement.

personal identifying information from comment submissions. You should submit only information that you wish to make available publicly. All submissions should refer to File Number SR–EMERALD–2020–05 and should be submitted on or before June 29, 2020.

For the Commission, by the Division of Trading and Markets, pursuant to delegated authority.[16]

J. Matthew DeLesDernier,

Assistant Secretary.

[FR Doc. 2020–12276 Filed 6–5–20; 8:45 am]

BILLING CODE 8011–01–P

SECURITIES AND EXCHANGE COMMISSION

[Release No. 34–88995; File No. SR–Phlx–2020–29]

Self-Regulatory Organizations; Nasdaq PHLX LLC; Notice of Filing and Immediate Effectiveness of Proposed Rule Change To Further Extend the Deadline for Certain Written Supervisory-Related Reports Pursuant to Options 10, Section 7 (Supervision of Accounts)

June 2, 2020.

Pursuant to Section 19(b)(1) of the Securities Exchange Act of 1934 (''Act''),[1] and Rule 19b-4 thereunder,[2] notice is hereby given that on June 1, 2020, Nasdaq PHLX LLC (''Exchange'') filed with the Securities and Exchange Commission (''SEC'' or ''Commission'') the proposed rule change as described in Items I and II below, which Items have been prepared by the Exchange. The Commission is publishing this notice to solicit comments on the proposed rule change from interested persons.

I. Self-Regulatory Organization's Statement of the Terms of Substance of the Proposed Rule Change

The Exchange proposes to further extend the filing requirements for certain written reports pursuant to Options 10, Section 7, currently due June 1, 2020, to June 30, 2020.

The text of the proposed rule change is available on the Exchange's website at *http://nasdaqphlx.cchwallstreet.com/,* at the principal office of the Exchange, and at the Commission's Public Reference Room.

[16] 17 CFR 200.30–3(a)(12).

[1] 15 U.S.C. 78s(b)(1).

[2] 17 CFR 240.19b–4.

II. Self-Regulatory Organization's Statement of the Purpose of, and Statutory Basis for, the Proposed Rule Change

In its filing with the Commission, the Exchange included statements concerning the purpose of and basis for the proposed rule change and discussed any comments it received on the proposed rule change. The text of these statements may be examined at the places specified in Item IV below. The Exchange has prepared summaries, set forth in sections A, B, and C below, of the most significant aspects of such statements.

A. Self-Regulatory Organization's Statement of the Purpose of, and Statutory Basis for, the Proposed Rule Change

1. Purpose

Given current market conditions, the Exchange proposes to provide its members temporary relief from filing certain supervision-related reports pursuant to Options 10, Section 7 (Supervision of Accounts).

In December 2019, COVID–19 began to spread and disrupt company operations and supply chains and impact consumers and investors, resulting in a dramatic slowdown in production and spending.[3] By March 11, 2020, the World Health Organization characterized COVID–19 as a pandemic.[4] To slow the spread of the disease, federal and state officials implemented social-distancing measures, placed significant limitations on large gatherings, limited travel, and closed non-essential businesses. These measures have affected the U.S. markets.[5] In the United States, Level 1 market wide circuit breaker halts were triggered on March 9, March 12, March 16, and March 18, 2020. While markets have seen significant declines, governments around the world are undertaking efforts to stabilize the economy and assist affected companies and their employees.[6] State governments have only recently relaxed some social distancing measures and permitted the limited reopening of non-essential businesses. Significant uncertainty remains.

Amidst this continued and unprecedented market uncertainty, the Exchange sought to address potential challenges that members may face in timely meeting their obligations to submit to the Exchange annual supervision-related reports under Options 10, Sections 7(g) and (h) (''Supervision Reporting Requirements''), especially in light of unforeseen and uncertain demands on resources required to respond to COVID–19. Options 10, Section 7(g) requires each Exchange member that conducts a non-member customer business to submit to the Exchange a written report on the member's supervision and compliance effort during the preceding year and on the adequacy of the member's ongoing compliance processes and procedures. Each member that conducts a public customer options business is also required to specifically include its options compliance program in the report.[7] The Section 7(g) report is due on April 1 of each year. Options 10, Section 7(h) requires that each member submit, by April 1 of each year, a copy of the Section 7(g) report to one or more control persons or, if the member has no control person, to the audit committee of its board of directors or its equivalent committee or group.[8]

On March 31, 2020, the Exchange filed a proposal to temporarily extend the filing requirements for these annual supervision-related reports from April 1, 2020 to June 1, 2020.[9] In light of the

[3] *See, e.g.,* Chairman Jay Clayton, Proposed Amendments to Modernize and Enhance Financial Disclosures; Other Ongoing Disclosure Modernization Initiatives; Impact of the Coronavirus; Environmental and Climate-Related Disclosure (Jan. 30, 2020), *available at https://www.sec.gov/news/public-statement/clayton-mda-2020-01-30.* (''Yesterday, I asked the staff to monitor and, to the extent necessary or appropriate, provide guidance and other assistance to issuers and other market participants regarding disclosures related to the current and potential effects of the coronavirus. We recognize that such effects may be difficult to assess or predict with meaningful precision both generally and as an industry- or issuer-specific basis. This is an uncertain issue where actual effects will depend on many factors beyond the control and knowledge of issuers.'').

[4] *See* WHO Director-General's Opening Remarks at the Media Briefing on COVID–19 (March 11, 2020), *available at https://www.who.int/dg/speeches/detail/who-director-general-s-opening-remarks-at-the-media-briefing-on-covid-19---11-march-2020.*

[5] ''Analysts showed that we saw the fastest 'correction' in history (down 10% from a high), occurring in a matter of days. In the last week of February, the Dow fell 12.36% with notional trading of $3.6 trillion.'' *See* Phil Mackintosh, Putting the Recent Volatility in Perspective, available at *https://www.nasdaq.com/articles/putting-the-recent-volatility-in-perspective-2020-03-05.*

[6] *See, e.g.,* the list of actions undertaken by the Board of Governors of the Federal Reserve System at *https://www.federalreserve.gov/covid-19.htm. See also* Families First Coronavirus Response Act, Public Law 116–127.

[7] The report shall include, but not be limited to, the information set out in Options 10, Section 7(g)(i)–(v).

[8] *See* Options 10, Section 7(h) for the meaning of the term ''control person'' and requirements in the case of a control person that is an organization.

[9] *See* Securities Exchange Act Release No. 88827 (March 31, 2020), 85 FR 19190 (April 6, 2020)

Continued

continued market uncertainty, the Exchange is again seeking to address potential challenges that members may face in timely meeting their obligations to submit to the Exchange annual supervision-related reports. Accordingly, the Exchange proposes to provide additional, temporary relief for members from the Supervision Reporting Requirements by further extending the June 1, 2020 filing deadlines described above to June 30, 2020. The Exchange believes that this additional, temporary relief will permit members to continue to focus on running their businesses and the health crisis caused by the COVID–19 pandemic, including its impact on their employees, customers, and communities.

The Exchange notes that in response to COVID–19, the Financial Industry Reporting Authority (''FINRA'') recently reissued temporary relief for member firms by, among other things, extending the deadline for submitting its supervision-related reports (FINRA Rule 3120 Report and FINRA Rule 3130 certification) from its initial extension deadlines of June 1, 2020 [10] to June 30, 2020.[11] The Exchange notes, too, that at least one other options exchange that had previously extended the supervisory report deadlines from April 1 to June 1 for its members,[12] also plans to submit a similar filing to, again, extend its deadlines through June 30, 2020. In light of these deadline extensions, the Exchange believes that extending its deadline would avoid unnecessary confusion and added burden among entities that are members of both the Exchange and FINRA because the deadline to submit supervisory reports would remain uniform.

2. Statutory Basis

The Exchange believes that its proposal is consistent with Section 6(b) of the Act,[13] in general, and furthers the objectives of Section 6(b)(5) of the Act,[14] in particular, in that it is designed to promote just and equitable principles of trade; to remove impediments to and perfect the mechanism of a free and open market and a national market system; and, in general to protect investors and the public interest. As a result of continued uncertainty related to the ongoing spread of the COVID–19 virus, the U.S. exchanges are experiencing unprecedented market volatility. The proposed rule change would allow the Exchange to continue to provide temporary relief for members from the Supervision Reporting Requirements, which were amended once already to require members to provide written reports to the Exchange by June 1, 2020, and further extend that deadline to June 30, 2020. The Exchange believes that this additional, temporary relief is necessary and appropriate in the public interest, and consistent with the protection of investors, given the unforeseen and uncertain challenges, including business continuity implementation and market volatility, posed by COVID–19 to members that must comply with the Supervision Reporting Requirements. The Exchange also believes that it is necessary and appropriate in the public interest, and consistent with the protection of investors, because FINRA has also re-extended the time for its members to file supervision-related reports from June 1, 2020 to June 30, 2020.[15] Additionally, as indicated above, at least one other options exchange that had previously extended the supervisory report deadlines from April 1 to June 1 for its members,[16] plans to submit a similar filing to re-extend its deadlines through June 30, 2020. Extending the deadline, therefore, will ensure that those entities that are members of both FINRA and the Exchange have a uniform deadline to submit their supervisory reports.

B. Self-Regulatory Organization's Statement on Burden on Competition

The Exchange does not believe that the proposed rule change will impose any burden on competition not necessary or appropriate in furtherance of the purposes of the Act. The proposed rule change is not designed to address any competitive issues but rather to provide temporary relief for all members that are required to comply with the Supervision Reporting Requirements.

C. Self-Regulatory Organization's Statement on Comments on the Proposed Rule Change Received From Members, Participants, or Others

No written comments were either solicited or received.

III. Date of Effectiveness of the Proposed Rule Change and Timing for Commission Action

Because the foregoing proposed rule change does not: (i) Significantly affect the protection of investors or the public interest; (ii) impose any significant burden on competition; and (iii) become operative for 30 days from the date on which it was filed, or such shorter time as the Commission may designate, it has become effective pursuant to Section 19(b)(3)(A) of the Act [17] and subparagraph (f)(6) of Rule 19b–4 thereunder.[18]

A proposed rule change filed pursuant to Rule 19b–4(f)(6) under the Act [19] normally does not become operative for 30 days after the date of its filing. However, Rule 19b–4(f)(6)(iii) [20] permits the Commission to designate a shorter time if such action is consistent with the protection of investors and the public interest. The Exchange has requested that the Commission waive the 30-day operative delay so that the proposed rule change may become operative upon filing. The Commission notes that the proposed rule change would allow the Exchange, in light of the COVID–19 pandemic, to provide temporary relief for members by extending the deadline for written reports pursuant to the Supervision Reporting Requirements from June 1, 2020 to June 30, 2020. This is consistent with the extension FINRA has provided its members for supervision-related reports and certifications required pursuant to FINRA Rule 3120 and FINRA Rule 3130 [21] and the extension for certain supervision-related reports Cboe Exchange, Inc. has provided its trading permit holders.[22] The Commission believes that waiver of the 30-day operative delay is consistent with the protection of investors and the public interest. Accordingly, the Commission hereby waives the operative delay and designates the proposed rule change operative upon filing.[23]

(Notice of Filing and Immediate Effectiveness of Proposed Rule Change To Temporarily Extend Certain Filing Requirement.

[10] *See* FINRA Regulatory Notice 20–08 (March 9, 2020) available at *https://www.finra.org/rules-guidance/notices/20-08.*

[11] *See* FINRA Regulatory Notice 20–08, FAQs, Supervision (May 19, 2020) available at *https://www.finra.org/rules-guidance/key-topics/covid-19/faq#supe.*

[12] *See* Securities Exchange Act No. 88528 (March 31, 2020), 85 FR 19196 (April 6, 2020) (SR–CBOE–2020–029).

[13] 15 U.S.C. 78f(b).

[14] 15 U.S.C. 78f(b)(5).

[15] *See supra* note 11.

[16] *See supra* note 12.

[17] 15 U.S.C. 78s(b)(3)(A).

[18] 17 CFR 240.19b–4(f)(6). In addition, Rule 19b–4(f)(6) requires a self-regulatory organization to give the Commission written notice of its intent to file the proposed rule change at least five business days prior to the date of filing of the proposed rule change, or such shorter time as designated by the Commission. The Exchange has satisfied this requirement.

[19] 17 CFR 240.19b–4(f)(6).

[20] 17 CFR 240.19b–4(f)(6)(iii).

[21] *See supra* note 12.

[22] *See* Securities Exchange Act Release No. 88978 (June 1, 2020) (SR–CBOE–2020–049).

[23] For purposes only of waiving the 30-day operative delay, the Commission also has considered the proposed rule's impact on

At any time within 60 days of the filing of the proposed rule change, the Commission summarily may temporarily suspend such rule change if it appears to the Commission that such action is necessary or appropriate in the public interest, for the protection of investors, or otherwise in furtherance of the purposes of the Act.

IV. Solicitation of Comments

Interested persons are invited to submit written data, views, and arguments concerning the foregoing, including whether the proposed rule change is consistent with the Act. Comments may be submitted by any of the following methods:

Electronic Comments

- Use the Commission's internet comment form (*http://www.sec.gov/rules/sro.shtml*); or
- Send an email to *rule-comments@sec.gov*. Please include File Number SR–Phlx–2020–29 on the subject line.

Paper Comments

- Send paper comments in triplicate to Secretary, Securities and Exchange Commission, 100 F Street NE, Washington, DC 20549–1090.

All submissions should refer to File Number SR–Phlx–2020–29. This file number should be included on the subject line if email is used. To help the Commission process and review your comments more efficiently, please use only one method. The Commission will post all comments on the Commission's internet website (*http://www.sec.gov/rules/sro.shtml*). Copies of the submission, all subsequent amendments, all written statements with respect to the proposed rule change that are filed with the Commission, and all written communications relating to the proposed rule change between the Commission and any person, other than those that may be withheld from the public in accordance with the provisions of 5 U.S.C. 552, will be available for website viewing and printing in the Commission's Public Reference Room, 100 F Street NE, Washington, DC 20549 on official business days between the hours of 10:00 a.m. and 3:00 p.m. Copies of the filing also will be available for inspection and copying at the principal office of the Exchange. All comments received will be posted without change. Persons submitting comments are cautioned that we do not redact or edit personal identifying information from comment submissions. You should submit only information that you wish to make available publicly. All submissions should refer to File Number SR–Phlx–2020–29 and should be submitted on or before June 29, 2020.

For the Commission, by the Division of Trading and Markets, pursuant to delegated authority.[24]

J. Matthew DeLesDernier,

Assistant Secretary.

[FR Doc. 2020–12278 Filed 6–5–20; 8:45 am]

BILLING CODE 8011–01–P

efficiency, competition, and capital formation. *See* 15 U.S.C. 78c(f).

[24] 17 CFR 200.30–3(a)(12).

SECURITIES AND EXCHANGE COMMISSION

[Release No. 34–88989; File No. SR–OCC–2020–004]

Self-Regulatory Organizations; The Options Clearing Corporation; Order Approving Proposed Rule Change To Modify the Sequence for Processing Options Transactions

June 2, 2020.

I. Introduction

On April 6, 2020, the Options Clearing Corporation (''OCC'') filed with the Securities and Exchange Commission (''Commission'') the proposed rule change SR–OCC–2020–004 (''Proposed Rule Change'') pursuant to Section 19(b) of the Securities Exchange Act of 1934 (''Exchange Act'')[1] and Rule 19b–4[2] thereunder to describe a change to the sequence in which options transactions are processed.[3] The Proposed Rule Change was published for public comment in the **Federal Register** on April 21, 2020.[4] The Commission has received no comments regarding the Proposed Rule Change. This order approves the Proposed Rule Change.

II. Background

Currently, OCC processes all securities and commodity futures options transactions in the following sequence:[5] (1) Opening Buys; (2) Opening Sells; (3) Closing Buys; (4) Exercises; (5) Closing Sells; and (6) Assignments. As discussed below, OCC's Clearing Members indicated that the current processing sequence could raise issues related to compliance with exchange rules requiring that firms exercise only ''outstanding'' net long positions.[6] OCC proposes to change the order in which it processes such transactions by moving ''Closing Sells'' ahead of ''Exercises,'' which would result in the following sequence: (1) Opening Buys; (2) Opening Sells; (3) Closing Buys; (4) *Closing Sells*; (5) *Exercises*; and (6) Assignments. The current processing sequence was designed to protect Clearing Members against certain errors; however, OCC believes that operational changes as well as increased Clearing Member proficiency in trade processing warrants a change to the processing sequence to reflect the tools OCC offers its Clearing Members as well as increased Clearing Member proficiency.[7]

Current Processing Sequence

The current processing sequence was designed to protect against the risk that an erroneously coded transaction could prevent a Clearing Member from appropriately exercising a long position. The vast majority of customer securities options positions are maintained on a gross basis at OCC. A miscoded sell transaction of one customer could close out a long position in the same series of another customer, which would prevent the latter from exercising the long position. Processing closing sell transactions after exercises avoids the prevention of exercises by erroneously coded sell transactions.

Market-Maker and Other Net Accounts: The current processing sequence applies to firm, customer, and Market-Maker accounts. The processing sequence for Market-Maker accounts, however, includes one additional step because Market-Maker accounts are held on a net basis.[8] At the end of each trading day, OCC nets offsetting positions in the same options series in

[1] 15 U.S.C. 78s(b)(1).

[2] 17 CFR 240.19b–4.

[3] *See* Notice of Filing *infra* note 4, 85 FR at 22197.

[4] Securities Exchange Act Release No. 88654 (Apr. 15, 2020), 85 FR 22197 (Apr. 21, 2020) (File No. SR–OCC–2020–004) (''Notice of Filing'').

[5] A ''commodity future'' is defined in Article I(c)(24) of By-Laws as ''a futures contract within the exclusive jurisdiction of the Commodity Futures Trading Commission that is traded on, through the facilities of, or subject to the rules of a futures market.'' Options on securities futures currently do not exist. *See https://www.theocc.com/components/docs/legal/rules_and_bylaws/occ_bylaws.pdf.*

[6] *See* Notice of Filing, 85 FR at 22198.

[7] *See id.*

[8] As noted above, the vast majority of customer accounts are maintained on a gross basis. A few Clearing Members have established the functionality to designate sub-accounts within their omnibus customer and firm accounts held at OCC. These sub-accounts are established for a specific customer or joint back office account and the account holders can elect to hold these accounts on a net basis to assist with the position reconciliation process. When the account holders elect to hold the accounts in this manner, they are subject to the same netting process to which Market-Maker accounts are subject. *See* Interpretation and Policy .04 to Article VI, Section 3 of OCC's By-Laws available at *https://www.theocc.com/components/docs/legal/rules_and_bylaws/occ_bylaws.pdf.*

each Market-Maker account. OCC nets offsetting positions before processing the exercise of long positions.[9] From a systems perspective, this means that the current processing sequence for Market-Maker accounts is as follows: (1) Opening Buys; (2) Opening Sells; (3) Closing Buys; (4) *Position Netting*; (5) Exercises; (6) Closing Sells; and (7) Assignments.

Clearing Members have visibility into the trade information that OCC receives, which is now available in near real-time.[10] OCC provides for visibility through a screen in ENCORE and an On Demand Position file provided to Clearing Members, both of which allow Clearing Members to evaluate the availability of long positions to cover exercises notices. OCC also permits Clearing Members to adjust positions for the purpose of correcting the miscoding errors as described above. Specifically, Clearing Members may correct such errors by entering a position adjustment in ENCORE prior to exercises being processed.[11]

Additionally, OCC's Clearing Members have indicated that the current processing sequence could raise issues related to compliance with exchange rules requiring that firms exercise only ''outstanding'' net long positions.[12] Clearing Members have indicated that a customer position could be subject to conflicting closing sale and exercise instructions. Under OCC's current processing sequence, such instructions could lead to a position that was intended to be closed out being exercised instead.

Proposed Processing Sequence

OCC proposes to modify the processing sequence for all securities and futures options transactions for all account types to process all closing sell transactions prior to all exercise transactions.[13] OCC proposes to change the order in which it processes such transactions by moving ''Closing Sells'' ahead of ''Exercises,'' which would result in the following sequence: (1) Opening Buys; (2) Opening Sells; (3) Closing Buys; (4) *Closing Sells*; (5) *Exercises*; and (6) Assignments. For Market-Maker and other accounts held on a net basis, OCC proposes to net offsetting positions after closing sells but before exercises.

OCC discussed the current processing sequence and the Proposed Rule Change with its Clearing Members at the OCC Roundtable, an OCC-sponsored advisory group comprised of representatives from OCC's participant.[14] Based upon those discussions, OCC believes that its current processing sequence for options transactions no longer needs to be designed to protect Clearing Members from errors in customers' accounts that would result in closing out a position that was intended to be exercised.[15] Further, OCC represented that Clearing Members believe the Proposed Rule Change would help them comply with certain Exchange rules that require customers to exercise only ''outstanding'' net long positions.[16] As noted, Clearing Members now have visibility into near real-time trade data and the ability to adjust positions prior to exercise to correct errors in the coding of non-critical aspects of a trade, which was not available when the current processing sequence was established.

III. Discussion and Commission Findings

Section 19(b)(2)(C) of the Exchange Act directs the Commission to approve a proposed rule change of a self-regulatory organization if it finds that such proposed rule change is consistent with the requirements of the Exchange Act and the rules and regulations thereunder applicable to such organization.[17] After carefully considering the Proposed Rule Change, the Commission finds that the proposal is consistent with the requirements of the Exchange Act and the rules and regulations thereunder applicable to OCC. More specifically, the Commission finds that the proposal is consistent with Section 17A(b)(3)(F) of the Exchange Act.[18]

A. Consistency With Section 17A(b)(3)(F) of the Exchange Act

Section 17A(b)(3)(F) of the Exchange Act requires, among other things, that the rules of a clearing agency be designed to promote the prompt and accurate clearance and settlement of securities transactions.[19] Based on its review of the record, the Commission believes that modifying OCC's processing sequence for all securities and futures options transactions as described above is consistent with the promotion of prompt and accurate clearance and settlement of securities transactions for the reasons described below.

Clearing Members have raised concerns regarding their ability to comply with exchange rules given OCC's current processing sequence. Specifically, exchanges require market participants to exercise only outstanding net long positions. Processing exercises after buys and sells could address situations in which a customer position is subject to conflicting closing sale and exercise instructions, which could lead to a position being exercised that was intended to be closed out.

The current processing sequence was designed to ensure that a market participant would be able to exercise its long positions even if a trade has been miscoded. The need for such protections, however, arose at a time when trades were received and processed in a batch at the end of the

[9] OCC represented that netting before exercise is designed to address operational risk concerns related to the processing of dividend play transactions by Market-Makers. *See* Notice of Filing, 85 FR at 22198. A dividend play is a trading strategy that historically was primarily engaged in by Market-Makers and involved buying and selling an equal number of call options right before a dividend date on the underlying equity and exercising the long call options with the goal of capturing the dividend on the underlying equity.

[10] When the current processing sequence was adopted, OCC received trades in a batch file from each exchange at the end of the trading day. OCC would then process trades on a batch basis prior to the opening of trading the following business day. In contrast, OCC now receives trade information on a near real-time basis. The functionality to receive trades on a near real-time basis has been available through OCC's ENCORE clearing system since 2002. *See id.*

[11] OCC allows Clearing Members to make such position adjustment only for non-critical aspects of a trade. For example, a Clearing Member would not be permitted to change the price or symbol of a trade.

[12] *See* Notice of Filing, 85 FR at 22198. The rules of one exchange provide that, ''an outstanding options contract may be exercised during the time period specified in the Rules of [OCC] by the tender to [OCC] of an exercise notice in accordance with the Rules of [OCC].'' NYSE Arca Rule 6.24–O(a). *See also* FINRA Rule 2360 (b)(23) and NYSE American Options Rule 980(a). An ''outstanding'' contract is ''an options contract which has been issued by [OCC] and has neither been the subject of a closing writing transaction nor has reached its expiration date.'' NYSE Arca Rule 6.1–O(b)(26). *See also* FINRA Rule 2360 (a)(26).

[13] OCC currently uses the same processing sequence for options on commodity futures; however, OCC understands that futures customers and Clearing Members are indifferent to the processing sequence for futures transactions. See Notice of Filing, 85 FR at 22199. Futures firms submit very few trades marked as closing transactions, and as a result, submit nightly adjustments to correct their open interest, which, in turn reduces the potential of an exercise error since the firms verify their long positions on a daily basis. *Id.*

[14] The OCC Roundtable is made up of Exchanges, a cross-section of OCC Clearing Members, and OCC staff who hold regular monthly operations update calls.

[15] *See* Notice of Filing, 85 FR at 22199.

[16] *See* Notice of Filing, 85 FR at 22199. By processing all buys and sells prior to exercises, Clearing Members believe that the proposed processing sequence would help address situations in which a customer position is subject to conflicting closing sale and exercise instructions, which could lead to a position being exercised that was intended to be closed out under the current processing sequence. *Id.*

[17] 15 U.S.C. 78s(b)(2)(C).

[18] 15 U.S.C. 78q–1(b)(3)(F).

[19] 15 U.S.C. 78q–1(b)(3)(F).

day. Visibility into the near real-time trade information provided to OCC allows Clearing Members to better understand the long positions available for exercise and to correct coding errors through position adjustments.

Further, as noted above, OCC's determination to propose a change to its current processing sequence was supported by discussions with Clearing Members at the OCC Roundtable and during regular monthly operations update calls with Clearing Members and exchanges. Given the position adjustment tools available to Clearing Members to address miscoded transactions, the Commission believes that revising OCC's processing sequence to facilitate compliance with exchange rules would promote the prompt and accurate clearance and settlement of securities transactions. The Commission believes, therefore, that the proposed processing sequence is consistent with the requirements of Section 17A(b)(3)(F) of the Exchange Act.[20]

IV. Conclusion

On the basis of the foregoing, the Commission finds that the Proposed Rule Change is consistent with the requirements of the Exchange Act, and in particular, the requirements of Section 17A of the Exchange Act[21] and the rules and regulations thereunder.

It is therefore ordered, pursuant to Section 19(b)(2) of the Exchange Act,[22] that the Proposed Rule Change (SR–OCC–2020–004) be, and hereby is, approved.

For the Commission, by the Division of Trading and Markets, pursuant to delegated authority.[23]

J. Matthew DeLesDernier,

Assistant Secretary.

[FR Doc. 2020–12273 Filed 6–5–20; 8:45 am]

BILLING CODE 8011–01–P

[20] 15 U.S.C. 78q–1(b)(3)(D).

[21] In approving this Proposed Rule Change, the Commission has considered the proposed rules' impact on efficiency, competition, and capital formation. *See* 15 U.S.C. 78c(f).

[22] 15 U.S.C. 78s(b)(2).

[23] 17 CFR 200.30–3(a)(12).

SECURITIES AND EXCHANGE COMMISSION

[Release No. 34–88988; File No. SR–MIAX–2020–13]

Self-Regulatory Organizations; Miami International Securities Exchange, LLC; Notice of Filing and Immediate Effectiveness of a Proposed Rule Change To Amend Exchange Rule 404, Series of Option Contracts Open for Trading, Exchange Rule 510, Minimum Price Variations and Minimum Trading Increments, and Exchange Rule 516, Order Types Defined, To Conform the Rules to Section 3.1 of the Plan for the Purpose of Developing and Implementing Procedures Designed To Facilitate the Listing and Trading of Standardized Options

June 2, 2020.

Pursuant to the provisions of Section 19(b)(1) of the Securities Exchange Act of 1934 (''Act'')[1] and Rule 19b–4 thereunder,[2] notice is hereby given that on May 29, 2020, Miami International Securities Exchange, LLC (''MIAX'' or the ''Exchange'') filed with the Securities and Exchange Commission (''Commission'') a proposed rule change as described in Items I, II, and III below, which Items have been prepared by the Exchange. The Commission is publishing this notice to solicit comments on the proposed rule change from interested persons.

I. Self-Regulatory Organization's Statement of the Terms of Substance of the Proposed Rule Change

The Exchange is filing a proposal to amend certain of the Exchange's rules to conform to Section 3.1 of the Plan for the Purpose of Developing and Implementing Procedures Designed to Facilitate the Listing and Trading of Standardized Options (the ''OLPP'') and add new subparagraphs (a)(3)(i)–(iii) and (c) to Exchange Rule 510.

The text of the proposed rule change is available on the Exchange's website at *http://www.miaxoptions.com/rule-filings/* at MIAX's principal office, and at the Commission's Public Reference Room.

II. Self-Regulatory Organization's Statement of the Purpose of, and Statutory Basis for, the Proposed Rule Change

In its filing with the Commission, the Exchange included statements concerning the purpose of and basis for the proposed rule change and discussed any comments it received on the proposed rule change. The text of these statements may be examined at the places specified in Item IV below. The Exchange has prepared summaries, set forth in sections A, B, and C below, of the most significant aspects of such statements.

A. Self-Regulatory Organization's Statement of the Purpose of, and Statutory Basis for, the Proposed Rule Change

1. Purpose

The purpose of this rule change is to amend Exchange Rule 404, Series of Option Contracts Open for Trading, Exchange Rule 510, Minimum Price Variations and Minimum Trading Increments, and Exchange Rule 516, Order Types Defined, to align the Exchange's rules with the recently approved amendment to the OLPP.

Background

On January 23, 2007, the Commission approved on a limited basis a Penny Pilot in option classes in certain issues (''Penny Pilot''). The Penny Pilot was designed to determine whether investors would benefit from options being quoted in penny increments, and in which classes the benefits were most significant. The Penny Pilot was initiated at the then existing option exchanges in January 2007[3] and expanded and extended numerous times over the last 13 years.[4] In each instance, these approvals relied upon the consideration of data periodically provided by the Exchanges that analyzed how quoting options in penny increments affects spreads, liquidity, quote traffic, and volume. Today, the

[1] 15 U.S.C. 78s(b)(1).

[2] 17 CFR 240.19b–4.

[3] *See* Securities Exchange Act Release Nos. 55154 (January 23, 2007), 72 FR 4743 (February 1, 2007) (SR–CBOE–2006–92); 55161 (January 24, 2007), 72 FR 4754 (February 1, 2007) (SR–ISE–2006–62); 54886 (December 6, 2006), 71 FR 74979 (December 13, 2006) (SR–Phlx–2006–74); 54590 (October 12, 2006), 71 FR 61525 (October 18, 2006) (SR–NYSEArca–2006–73); and 54741 (November 9, 2006), 71 FR 67176 (November 20, 2006) (SR–Amex–2006–106).

[4] *See* Securities Exchange Act Release Nos. 87606 (November 25, 2019), 84 FR 66030 (December 2, 2019) (SR–MIAX–2019–47); 86054 (June 6, 2019), 84 FR 27385 (June 12, 2019) (SR–MIAX–2019–27); 84864 (December 19, 2018), 83 FR 66778 (December 27, 2018) (SR–MIAX–2018–38); 83515 (June 25, 2018), 83 FR 30786 (June 29, 2018) (SR–MIAX–2018–12); 82354 (December 19, 2017), 82 FR 61058 (December 26, 2017) (SR–MIAX–2017–48); 80757 (May 24, 2017), 82 FR 25032 (May 31, 2017) (SR–MIAX–2017–23); 79432 (November 30, 2016), 81 FR 87990 (December 6, 2016) (SR–MIAX–2016–45); 78080 (June 15, 2016), 81 FR 40377 (June 21, 2016) (SR–MIAX–2016–16); 75284 (June 24, 2015), 80 FR 37349 (June 30, 2015) (SR–MIAX–2015–40); 70972 (December 3, 2013), 78 FR 73909 (December 9, 2013) (SR–MIAX–2013–54); 69785 (June 18, 2013), 78 FR 37856 (June 24, 2013) (SR–MIAX–2013–28); and 68551 (December 31, 2012), 78 FR 973 (January 7, 2013) (SR–MIAX–2012–04).

Penny Pilot includes 363 option classes, which are among the most actively traded, multiply listed option classes. The Penny Pilot is scheduled to expire by its own terms on June 30, 2020.[5]

In light of the imminent expiration of the Penny Pilot, on June 30, 2020, the Exchange, together with other participating exchanges, filed, on July 18, 2019, a proposal to amend the OLPP.[6] On April 1, 2020, the U.S. Securities and Exchange Commission (''Commission'') approved the amendment to the OLPP to make permanent the Pilot Program (the ''OLPP Program'').[7]

The OLPP Program replaces the Penny Pilot by instituting a permanent program that would permit quoting in penny increments for certain option classes. Under the terms of the OLPP Program, designated option classes would continue to be quoted in $0.01 and $0.05 increments according to the same parameters for the Penny Pilot. In addition, the OLPP Program would: (i) Establish an annual review process to add option classes to, or to remove option classes from, the OLPP Program; (ii) allow an option class to be added to the OLPP Program if it is a newly listed option class and it meets certain criteria; (iii) allow an option class to be added to the OLPP Program if it is an option class that has seen significant growth in activity; (iv) provide that if a corporate action involves one or more option classes in the OLPP Program, all adjusted and unadjusted series and classes emerging as a result of the corporate action will be included in the OLPP Program; and (v) provide that any series in an option class participating in the OLPP Program that have been delisted, or are identified by OCC as ineligible for opening Customer transactions, will continue to trade pursuant to the OLPP Program until they expire.

To conform its rules with the OLPP Program, the Exchange proposes to delete Interpretation and Policy .01 to Exchange Rule 510 (the ''Penny Pilot Rule''), which will be ''Reserved,'' and replace it with new Exchange Rule 510(c) (Requirements for Penny Interval Program), which is described below, and to replace references to the ''Penny Pilot'' in several Exchange rules with ''Penny Interval Program.''

The Exchange also proposes to amend Exchange Rule 510, Minimum Price Variations and Minimum Trading Increments, to adopt subparagraphs (a)(3)(i)–(iii) to conform the Exchange's rules regarding minimum price variations for options in the proposed Penny Interval Program with similar rules of other option exchanges.[8] In particular, the Exchange proposes to adopt subparagraph (a)(3)(i)–(iii), which will describe that for options contracts traded pursuant to the proposed Penny Interval Program (which the Exchange has proposed as new Exchange Rule 510(c)): (i) All option contracts in QQQ, SPY and IWM will quote in a minimum of one cent ($0.01) price variations; (ii) for all other option contracts included in the Penny Interval Program that are trading at less than $3, those option contracts will quote in a minimum of one cent ($0.01) price variations; and (iii) for all other option contracts included in the Penny Interval Program that are trading at or above $3, those option contracts will quote in a minimum of five cents ($0.05) price variations. The Exchange notes that the Commission previously approved minimum quoting increments of one cent ($0.01) for all option contracts in QQQ, IWM and SPY, regardless of price, over the course of the expansion of the Penny Pilot rules.[9] Accordingly, the Exchange proposes to align its rules regarding minimum price variations for option contracts in the Penny Interval Program with other option exchanges.

Penny Interval Program

The Exchange proposes to codify the OLPP Program in new Exchange Rule 510(c) (Requirements for Penny Interval Program) (the ''Penny Program''), which will replace the Penny Pilot Rule and permanently permit the Exchange to quote certain option classes in minimum increments of one cent ($0.01) and five cents ($0.05) (''penny increments''). The penny increments that currently apply under the Penny Pilot will continue to apply for option classes included in the Penny Program. Specifically, (i) the minimum quoting increment for all series in the QQQ, SPY, and IWM would continue to be $0.01, regardless of price (which the Exchange proposes to codify in proposed Exchange Rule 510(a)(3)(i)–(iii)); (ii) all series of an option class included in the Penny Program with a price of less than $3.00 would be quoted in $0.01 increments; and (iii) all series of an option class included in the Penny Program with a price of $3.00 or higher would be quoted in $0.05 increments.[10]

The Penny Program would initially apply to the 363 most actively traded multiply listed option classes, based on National Cleared Volume at The Options Clearing Corporation (''OCC'') in the six full calendar months ending in the month of approval (*i.e.,* November 2019–April 2020) that currently quote in penny increments, or overlie securities priced below $200, or any index at an index level below $200. Eligibility for inclusion in the Penny Program will be determined at the close of trading on the monthly Expiration Friday of the second full month following April 1, 2020 (*i.e.,* June 19, 2020).

Once in the Penny Program, an option class will remain included until it is no longer among the 425 most actively traded option classes at the time the annual review is conducted (described below), at which point it will be removed from the Penny Program. As described in more detail below, the removed class will be replaced by the next most actively traded multiply listed option class overlying securities priced below $200 per share, or any index at an index level below $200, and not yet in the Penny Program. Advanced notice regarding the option classes included, added, or removed from the Penny Program will be provided to the Exchange's Members via Regulatory Circular and published by the Exchange on its website.

Annual Review

The Penny Program would include an annual review process that applies objective criteria to determine option classes to be added to, or removed from, the Penny Program. Specifically, on an annual basis beginning in December 2020 and occurring every December thereafter, the Exchange will review and rank all multiply listed option classes based on National Cleared Volume at OCC for the six full calendar months from June 1st through November 30th for determination of the most actively traded option classes. Any option classes not yet in the Penny Program may be added to the Penny Program if the class is among the 300 most actively traded multiply listed option classes

[5] *See* Securities Exchange Act Release No. 87606 (November 25, 2019), 84 FR 66030 (December 2, 2019) (SR–MIAX–2019–47).

[6] *See* Securities Exchange Act Release No. 87681 (December 9, 2019), 84 FR 68960 (December 17, 2019) (''Notice'').

[7] *See* Securities Exchange Act Release No. 88532 (April 1, 2020), 85 FR 19545 (April 7, 2020) (File No. 4–443) (''Approval Order'').

[8] *See* NYSE Arca Rule 6.72–O (Trading Differentials); *see also* Nasdaq Stock Market, Options 3, Section 3, Supplementary Material .01.

[9] *See* Securities Exchange Act Release Nos. 55156 (January 23, 2007), 72 FR 4759 (February 1, 2007) (SR–NYSEArca–2006–73) (Order Granting Approval to Proposed rule Change as Modified by Amendment No. 1 Thereto, To Create an Options Penny Pilot Program); 61061 (November 24, 2009), 74 FR 62857 (December 1, 2009) (SR–NYSEArca–2009–44) (Order Granting Partial Approval of a Proposed Rule Change, as Modified by Amendment No. 4 Thereto, Expanding the Penny Pilot Program).

[10] *See* proposed Exchange Rule 510(a)(3)(i)–(iii).

and priced below $200 per share, or any index at an index level below $200.

Following the annual review, option classes to be added to the Penny Program would begin quoting in penny increments (*i.e.,* $0.01 if trading at less than $3.00; and $0.05 if trading at $3.00 and above) on the first trading day of January. In addition, following the annual review, any option class in the Penny Program that falls outside of the 425 most actively traded option classes would be removed from the Penny Program. After the annual review, option classes that are removed from the Penny Program will be subject to the minimum trading increments set forth in Exchange Rule 510, effective on the first trading day of April.

Changes to the Composition of the Penny Program Outside of the Annual Review

Newly Listed Option Classes and Option Classes With Significant Growth in Activity

The Penny Program would specify a process and parameters for including option classes in the Penny Program outside the annual review process in two circumstances. These provisions are designed to provide objective criteria to add to the Penny Program new option classes in issues with the most demonstrated trading interest from market participants and investors on an expedited basis prior to the annual review, with the benefit that market participants and investors will then be able to trade these new option classes based upon quotes expressed in finer trading increments.

First, the Penny Program provides for certain newly listed option classes to be added to the Penny Program outside of the annual review process, provided that (i) the class is among the 300 most actively traded, multiply listed option classes, as ranked by National Cleared Volume at OCC, in its first full calendar month of trading and (ii) the underlying security is priced below $200 or the underlying index is at an index level below $200. Such newly listed option classes added to the Penny Program pursuant to this process would remain in the Penny Program for one full calendar year and then would be subject to the annual review process.

Second, the Penny Program would allow an option class to be added to the Penny Program outside of the annual review process if it is an option class that meets certain specific criteria. Specifically, new option classes may be added to the Penny Program if: (i) The option class is among the 75 most actively traded multiply listed option classes, as ranked by National Cleared Volume at OCC, in the prior six full calendar months of trading and (ii) the underlying security is priced below $200 or the underlying index is at an index level below $200. Any option class added under this provision will be added on the first trading day of the second full month after it qualifies and will remain in the Penny Program for the rest of the calendar year, after which it will be subject to the annual review process.

Corporate Actions

The Penny Program would also specify a process to address option classes in the Penny Program that undergo a corporate action and is designed to ensure continuous liquidity in the affected option classes. Specifically, if a corporate action involves one or more option classes in the Penny Program, all adjusted and unadjusted series of an option class would continue to be included in the Penny Program.[11] Furthermore, neither the trading volume threshold, nor the initial price test would apply to option classes added to the Penny Program as a result of the corporate action. Finally, the newly added adjusted and unadjusted series of the option class would remain in the Penny Program for one full calendar year and then would become subject to the annual review process.

Delisted or Ineligible Option Classes

Finally, the Penny Program would provide a mechanism to address option classes that have been delisted or those that are no longer eligible for listing. Specifically, any series in an option class participating in the Penny Program in which the underlying has been delisted, or is identified by OCC as ineligible for opening customer transactions, would continue to quote pursuant to the terms of the Penny Program until all options series have expired.

Technical Changes

The Exchange proposes to replace references to the Penny Pilot with the new reference to the Penny Interval Program. These proposed changes would be to Penny Pilot references in Exchange Rule 404, Interpretation and Policy .08(d) and Exchange Rule 516(b)(3). The Exchange believes these technical changes would add clarity, transparency and internal consistency to the Exchange's rules making them easier for market participants to navigate.

Implementation

This proposed rule change will become operative on July 1, 2020, upon expiration of the current Penny Pilot on June 30, 2020. The Exchange proposes to implement the Penny Program on July 1, 2020, which is the first trading day of the third month following the Approval Order issued on April 1, 2020—*i.e.,* July 1, 2020.

2. Statutory Basis

The Exchange believes that its proposed rule change is consistent with Section 6(b) of the Act [12] in general, and furthers the objectives of Section 6(b)(5) of the Act [13] in particular, in that it is designed to prevent fraudulent and manipulative acts and practices, to promote just and equitable principles of trade, to foster cooperation and coordination with persons engaged in facilitating transactions in securities, to remove impediments to and perfect the mechanisms of a free and open market and a national market system and, in general, to protect investors and the public interest.

In particular, the proposed rule change, which conforms the Exchange rules to the recently adopted OLPP Program, allows the Exchange to provide market participants with a permanent Penny Program for quoting options in penny increments, which maximizes the benefit of quoting in a finer quoting increment to investors while minimizing the burden that a finer quoting increment places on quote traffic.

Accordingly, the Exchange believes that the proposal is consistent with the Act because, in conforming the Exchange rules to the OLPP Program, the Penny Program would employ processes, based upon objective criteria, that would rebalance the composition of the Penny Program, thereby helping to ensure that the most actively traded option classes are included in the Penny Program, which helps facilitate the maintenance of a fair and orderly market.

Technical Changes

The Exchange notes that the proposed changes to Exchange Rule 404, Interpretation and Policy .08(d) and Exchange Rule 516(b)(3) to replace references to the Penny Pilot with references to the Penny Interval Program

[11] For example, if Company A acquires Company B and Company A is not in the Penny Program but Company B is in the Penny Program, once the merger is consummated and an options contract adjustment is effective, then Company A would be added to the Penny Program and remain in the Penny Program for one calendar year.

[12] 15 U.S.C. 78f(b).

[13] 15 U.S.C. 78f(b)(5).

would provide clarity and transparency to the Exchange rules and would promote just and equitable principles of trade and remove impediments to, and perfect the mechanism of, a free and open market and a national market system. The proposed rule changes would also provide internal consistency within Exchange rules and operate to protect investors and the investing public by making the Exchange rules easier to navigate and comprehend.

B. Self-Regulatory Organization's Statement on Burden on Competition

The Exchange does not believe that the proposed rule change will impose any burden on competition that is not necessary or appropriate in furtherance of the purposes of the Act. The proposed Penny Program, which modifies the Exchange's rules to align them with the Commission approved OLPP Program, is not designed to be a competitive filing nor does it impose an undue burden on intermarket competition as the Exchange anticipates that the options exchanges will adopt substantially identical rules. Moreover, the Exchange believes that by conforming Exchange rules to the OLPP Program, the Exchange would promote regulatory clarity and consistency, thereby reducing burdens on the marketplace and facilitating investor protection. To the extent that there is a competitive burden on those option classes that do not qualify for the Penny Program, the Exchange believes that it is appropriate because the proposal should benefit all market participants and investors by maximizing the benefit of a finer quoting increment in those option classes with the most trading interest while minimizing the burden of greater quote traffic in option classes with less trading interest. The Exchange believes that adopting rules, which it anticipates will likewise be adopted by all option exchanges that are participants in the OLPP, would allow for continued competition between Exchange market participants trading similar products as their counterparts on other exchanges, while at the same time allowing the Exchange to continue to compete for order flow with other exchanges.

C. Self-Regulatory Organization's Statement on Comments on the Proposed Rule Change Received From Members, Participants, or Others

Written comments were neither solicited nor received.

III. Date of Effectiveness of the Proposed Rule Change and Timing for Commission Action

Because the foregoing proposed rule change does not: (i) Significantly affect the protection of investors or the public interest; (ii) impose any significant burden on competition; and (iii) become operative for 30 days after the date of the filing, or such shorter time as the Commission may designate, it has become effective pursuant to 19(b)(3)(A) of the Act [14] and Rule 19b–4(f)(6) [15] thereunder.

At any time within 60 days of the filing of the proposed rule change, the Commission summarily may temporarily suspend such rule change if it appears to the Commission that such action is necessary or appropriate in the public interest, for the protection of investors, or otherwise in furtherance of the purposes of the Act. If the Commission takes such action, the Commission shall institute proceedings to determine whether the proposed rule should be approved or disapproved.

IV. Solicitation of Comments

Interested persons are invited to submit written data, views, and arguments concerning the foregoing, including whether the proposed rule change is consistent with the Act. Comments may be submitted by any of the following methods:

Electronic Comments

- Use the Commission's internet comment form (*http://www.sec.gov/rules/sro.shtml*); or
- Send an email to *rule-comments@sec.gov.* Please include File Number SR–MIAX–2020–13 on the subject line

Paper Comments

- Send paper comments in triplicate to Vanessa Countryman, Secretary, Securities and Exchange Commission, 100 F Street NE, Washington, DC 20549–1090.

All submissions should refer to File Number SR–MIAX–2020–13. This file number should be included on the subject line if email is used. To help the Commission process and review your comments more efficiently, please use only one method. The Commission will post all comments on the Commission's internet website (*http://www.sec.gov/rules/sro.shtml*).

Copies of the submission, all subsequent amendments, all written statements with respect to the proposed rule change that are filed with the Commission, and all written communications relating to the proposed rule change between the Commission and any person, other than those that may be withheld from the public in accordance with the provisions of 5 U.S.C. 552, will be available for website viewing and printing in the Commission's Public Reference Room, 100 F Street NE, Washington, DC 20549, on official business days between the hours of 10:00 a.m. and 3:00 p.m. Copies of the filing also will be available for inspection and copying at the principal office of the Exchange. All comments received will be posted without change. Persons submitting comments are cautioned that we do not redact or edit personal identifying information from comment submissions. You should submit only information that you wish to make available publicly. All submissions should refer to File Number SR–MIAX–2020–13 and should be submitted on or before June 29, 2020.

For the Commission, by the Division of Trading and Markets, pursuant to delegated authority.[16]

J. Matthew DeLesDernier,

Assistant Secretary.

[FR Doc. 2020–12272 Filed 6–5–20; 8:45 am]

BILLING CODE 8011–01–P

[14] 15 U.S.C. 78s(b)(3)(A).

[15] 17 CFR 240.19b–4(f)(6). In addition, Rule 19b–4(f)(6) requires a self-regulatory organization to give the Commission written notice of its intent to file the proposed rule change at least five business days prior to the date of filing of the proposed rule change, or such shorter time as designated by the Commission. The Exchange has satisfied this requirement.

[16] 17 CFR 200.30–3(a)(12).

DEPARTMENT OF STATE

[Public Notice: 11133]

Proposal To Extend Cultural Property Agreement Between the United States and Colombia

AGENCY: Department of State.

ACTION: Public notice.

SUMMARY: Proposal to extend the *Memorandum of Understanding Between the Government of the United States of America and the Government of the Republic of Colombia Regarding the Imposition of Import Restrictions on Archaeological Material from the Pre-Columbian Cultures and Certain Ecclesiastical Ethnological Material of the Colonial Period of Colombia.*

FOR FURTHER INFORMATION CONTACT: Allison Davis, Cultural Heritage Center, Bureau of Educational and Cultural Affairs: 202–632–6307;

culprop@state.gov; include ''Colombia'' in the subject line.

SUPPLEMENTARY INFORMATION: Pursuant to the authority vested in the Assistant Secretary of State for Educational and Cultural Affairs, and pursuant to 19 U.S.C. 2602(f)(1), an extension of the *Memorandum of Understanding Between the Government of the United States of America and the Government of the Republic of Colombia Regarding the Imposition of Import Restrictions on Archaeological Material from the Pre-Columbian Cultures and Certain Ecclesiastical Ethnological Material of the Colonial Period of Colombia* is hereby proposed.

A copy of the Memorandum of Understanding, the Designated List of categories of material restricted from import into the United States, and related information can be found at the Cultural Heritage Center website: *http://culturalheritage.state.gov.*

Allison R. Davis,

Executive Director, Cultural Property Advisory Committee, Department of State.

[FR Doc. 2020–12315 Filed 6–5–20; 8:45 am]

BILLING CODE 4710–05–P

DEPARTMENT OF STATE

[Public Notice: 11132]

Proposal To Extend Cultural Property Agreement Between the United States and Italy

AGENCY: Department of State.

ACTION: Public notice.

SUMMARY: Proposal to extend the *Memorandum of Understanding Between the Government of the United States of America and the Government of the Republic of Italy Concerning the Imposition of Import Restrictions on Categories of Archaeological Material Representing the Pre-Classical, Classical and Imperial Roman Periods of Italy.*

FOR FURTHER INFORMATION CONTACT: Chelsea Freeland, Cultural Heritage Center, Bureau of Educational and Cultural Affairs: 202–632–6307; *culprop@state.gov;* include ''Italy'' in the subject line.

SUPPLEMENTARY INFORMATION: Pursuant to the authority vested in the Assistant Secretary of State for Educational and Cultural Affairs, and pursuant to 19 U.S.C. 2602(f)(1), an extension of the *Memorandum of Understanding Between the Government of the United States of America and the Government of the Republic of Italy Concerning the Imposition of Import Restrictions on Categories of Archaeological Material Representing the Pre-Classical, Classical and Imperial Roman Periods of Italy* is hereby proposed.

A copy of the Memorandum of Understanding, the Designated List of categories of material restricted from import into the United States, and related information can be found at the Cultural Heritage Center website: *http://culturalheritage.state.gov.*

Allison R. Davis,

Executive Director, Cultural Property Advisory Committee, Department of State.

[FR Doc. 2020–12312 Filed 6–5–20; 8:45 am]

BILLING CODE 4710–05–P

DEPARTMENT OF STATE

[Public Notice:11034]

Cultural Property Advisory Committee; Notice of Meeting

AGENCY: Department of State.

ACTION: Notice of meeting.

SUMMARY: We are issuing this notice to announce the location, date, time, and agenda for the next meeting of the Cultural Property Advisory Committee.

DATES: The Cultural Property Advisory Committee (CPAC) will meet July 22–23, 2020, 10:00 a.m. to 6:00 p.m. (EDT). CPAC will hold an open session on July 22, 2020, at 2:00 p.m. (EDT). It will last approximately one hour.

Participation: You may participate in the open session by videoconference. To participate, visit *http://culturalheritage.state.gov* for information on how to access the meeting. Please submit any request for reasonable accommodation not later than July 14, 2020, by contacting the Bureau of Educational and Cultural Affairs at *culprop@state.gov.* It may not be possible to accommodate requests made after that date.

Comments: The Committee will review your written comment if it is received by July 8, 2020, at 11:59 p.m. (EDT). You are not required to submit a written comment in order to make an oral comment in the open session.

ADDRESSES: The meeting will be held by videoconference.

Written Comments: You may submit written comments in two ways, depending on whether they contain privileged or confidential information:

- *Electronic Comments:* For ordinary comments, please use *http://www.regulations.gov,* enter the docket [DOS–2020–0022] and follow the prompts to submit your comments.
- *Email Comments:* For comments that contain privileged or confidential information (within the meaning of 19 U.S.C. 2605(i)(1)), please email submissions to *culprop@state.gov.* Include ''Italy'' and/or ''Colombia'' in the subject line.

FOR FURTHER INFORMATION CONTACT: For general questions concerning the meeting, contact Allison Davis, Bureau of Educational and Cultural Affairs—Cultural Heritage Center, by phone (202–632–6307) or email (*culprop@state.gov*).

SUPPLEMENTARY INFORMATION: In accordance with the Convention on Cultural Property Implementation Act (19 U.S.C. 2601 *et seq.*) (''the Act''), the Assistant Secretary of State for Educational and Cultural Affairs calls a meeting of the Cultural Property Advisory Committee (''the Committee'') (19 U.S.C. 2605(e)(2)). The Act describes the Committee's responsibilities. A portion of this meeting will be closed to the public pursuant to 5 U.S.C. 552b(c)(9)(B) and 19 U.S.C. 2605(h).

Meeting Agenda: The Committee will review the proposed extensions of the cultural property agreements with the Government of the Republic of Italy and the Government of the Republic of Colombia.

Open Session Participation: The Committee will hold an open session of the meeting to receive oral public comments on the proposed extensions of the agreements with Italy and Colombia on Wednesday, July 22, 2020, from 2:00 p.m. to approximately 3:00 p.m. (EDT). We have provided specific instructions on how to participate or observe the open session at *http://culturalheritage.state.gov.*

You do not need to register to observe the open session. You do not have to submit written comments to make an oral comment in the open session. If you do wish to speak, however, you must request to be scheduled by July 14, 2020, via email (*culprop@state.gov*). Please submit your name and any organizational affiliation in this request. The open session will start with a brief presentation by the Committee, after which you should be prepared to answer questions on any written statements you may have submitted. Finally, you may be invited to provide additional oral comments for a maximum of five (5) minutes per participant, time permitting. Due to time constraints, it may not be possible to accommodate all who wish to speak.

Written Comments: If you do not wish to participate in the open session but still wish to make your views known, you may submit written comments for the Committee's consideration. Submit non-privileged and non-confidential information (within the meaning of 19 U.S.C. 2605(i)(1)) regarding the

proposed extensions of the agreements with Italy and/or Colombia using the *Regulations.gov* website (listed in the ''COMMENTS'' section above) not later than July 8, 2020, at 11:59 p.m. (EDT). For comments that contain privileged or confidential information (within the meaning of 19 U.S.C. 2605(i)(1)), please send comments to *culprop@state.gov.* Include ''Italy'' and/or ''Colombia'' in the subject line. In all cases, your written comments should relate specifically to the determinations specified in the Act at 19 U.S.C. 2602(a)(1). Written comments submitted via regulations.gov are not private and are posted at *http://www.regulations.gov.* Because written comments cannot be edited to remove any personally identifying or contact information, we caution against including any such information in an electronic submission without appropriate permission to disclose that information (including trade secrets and commercial or financial information that are privileged or confidential within the meaning of 19 U.S.C. 2605(i)(1)). We request that any party soliciting or aggregating written comments from other persons inform those persons that the Department will not edit their comments to remove any identifying or contact information and that they therefore should not include any such information in their comments that they do not want publicly disclosed.

Allison R. Davis,

Executive Director, Cultural Property Advisory Committee, Department of State.

[FR Doc. 2020–12313 Filed 6–5–20; 8:45 am]

BILLING CODE 4710–05–P

SURFACE TRANSPORTATION BOARD

Release of Waybill Data

The Surface Transportation Board has received a request from the Mid-America Regional Council (WB20–13—3/26/20) for permission to use select data from the Board's 2018 Masked Carload Waybill Sample. A copy of this request may be obtained from the Board's website under docket no. WB20–13.

The waybill sample contains confidential railroad and shipper data; therefore, if any parties object to these requests, they should file their objections with the Director of the Board's Office of Economics within 14 calendar days of the date of this notice. The rules for release of waybill data are codified at 49 CFR 1244.9.

Contact: Alexander Dusenberry, (202) 245–0319.

Aretha Laws-Byrum,

Clearance Clerk.

[FR Doc. 2020–12340 Filed 6–5–20; 8:45 am]

BILLING CODE 4915–01–P

OFFICE OF THE UNITED STATES TRADE REPRESENTATIVE

Notice of Product Exclusion Amendment: China's Acts, Policies, and Practices Related to Technology Transfer, Intellectual Property, and Innovation

AGENCY: Office of the United States Trade Representative.

ACTION: Notice.

SUMMARY: Effective July 6, 2018, the U.S. Trade Representative imposed additional duties on goods of China with an annual trade value of approximately $34 billion as part of the action in the Section 301 investigation of China's acts, policies, and practices related to technology transfer, intellectual property, and innovation. The U.S. Trade Representative's determination included a decision to establish a product exclusion process. The U.S. Trade Representative initiated the exclusion process in July 2018, and stakeholders have submitted requests for the exclusion of specific products. In December 2018, March, April, May, June, July, September, October, December 2019, and February and May 2020, the U.S. Trade Representative issued determinations to grant exclusion requests and issue amendments. This notice announces the U.S. Trade Representative's determination to make a technical amendment to one previously granted exclusion.

DATES: The technical amendment announced in this notice is retroactive to the date of publication of the original exclusion and does not extend the period for the original exclusion. U.S. Customs and Border Protection will issue instructions on entry guidance and implementation.

FOR FURTHER INFORMATION CONTACT: For general questions about this notice, contact Assistant General Counsel Philip Butler or Director of Industrial Goods Justin Hoffmann at (202) 395–5725. For specific questions on customs classification or implementation of the product exclusions identified in the Annex to this notice, contact *traderemedy@cbp.dhs.gov.*

SUPPLEMENTARY INFORMATION:

A. Background

For background on the proceedings in this investigation, please see prior notices including 82 FR 40213 (August 23, 2017), 83 FR 14906 (April 6, 2018), 83 FR 28710 (June 20, 2018), 83 FR 33608 (July 17, 2018), 83 FR 38760 (August 7, 2018), 83 FR 40823 (August 16, 2018), 83 FR 47974 (September 21, 2018), 83 FR 65198 (December 19, 2018), 83 FR 67463 (December 28, 2018), 84 FR 7966 (March 5, 2019), 84 FR 11152 (March 25, 2019), 84 FR 16310 (April 18, 2019), 84 FR 21389 (May 14, 2019), 84 FR 25895 (June 4, 2019), 84 FR 32821 (July 9, 2019), 84 FR 49564 (September 20, 2019), 84 FR 52567 (October 2, 2019), 84 FR 69016 (December 17, 2019), 85 FR 7816 (February 11, 2020), and 85 FR 28692 (May 13, 2020).

Effective July 6, 2018, the U.S. Trade Representative imposed additional 25 percent duties on goods of China classified in 818 eight-digit subheadings of the Harmonized Tariff Schedule of the United States (HTSUS), with an approximate annual trade value of $34 billion. *See* 83 FR 28710. The U.S. Trade Representative's determination included a decision to establish a process by which U.S. stakeholders could request exclusion of particular products classified within an eight-digit HTSUS subheading covered by the $34 billion action from the additional duties. The U.S. Trade Representative issued a notice setting out the process for the product exclusions and opened a public docket. *See* 83 FR 32181 (the July 11 notice).

Under the July 11 notice, requests for exclusion had to identify the product subject to the request in terms of the physical characteristics that distinguish the product from other products within the relevant eight-digit subheading covered by the $34 billion action. Requestors also had to provide the ten-digit subheading of the HTSUS most applicable to the particular product requested for exclusion, and could submit information on the ability of U.S. Customs and Border Protection to administer the requested exclusion. Requestors were asked to provide the quantity and value of the Chinese-origin product that the requestor purchased in the last three years. With regard to the rationale for the requested exclusion, requests had to address the following factors:

- Whether the particular product is available only from China and, specifically, whether the particular product and/or a comparable product is available from sources in the United States and/or third countries.

• Whether the imposition of additional duties on the particular product would cause severe economic harm to the requestor or other U.S. interests.

• Whether the particular product is strategically important or related to ''Made in China 2025'' or other Chinese industrial programs.

The July 11 notice stated that the U.S. Trade Representative would take into account whether an exclusion would undermine the objective of the Section 301 investigation.

The July 11 notice required submission of requests for exclusion from the $34 billion action no later than October 9, 2018, and noted that the U.S. Trade Representative periodically would announce decisions. In December 2018, the U.S. Trade Representative granted an initial set of exclusion requests. *See* 83 FR 67463. The U.S. Trade Representative announced additional determinations in March, April, May, June, July, September, October, and December 2019, and February and May 2020. *See* 84 FR 11152; 84 FR 16310; 84 FR 21389; 84 FR 25895; 84 FR 32821; 84 FR 49564; 84 FR 52567; 84 FR 69016; 85 FR 7816; and 85 FR 28692.

B. Technical Amendments to Exclusions

Subparagraph A of the Annex makes one technical amendment to U.S. note 20(q)(131) to subchapter III of chapter 99 of the HTSUS, as set out in the Annex of the notice published at 84 FR 49564 (September 20, 2019).

The U.S. Trade Representative will continue to issue determinations on a periodic basis as needed.

Annex

A. Effective with respect to goods entered for consumption, or withdrawn from warehouse for consumption, on or after 12:01 a.m. eastern daylight time on July 6, 2018:

1. U.S. note 20(q)(131) to subchapter III of chapter 99 of the Harmonized Tariff Schedule of the United States is modified by deleting ''each valued over $20 but not over $35'' and inserting ''each valued not over $35'' in lieu thereof.

Joseph Barloon,

General Counsel, Office of the United States Trade Representative.

[FR Doc. 2020–12318 Filed 6–5–20; 8:45 am]

BILLING CODE 3290–F0–P

DEPARTMENT OF TRANSPORTATION

Federal Aviation Administration

Notice of Release of Land Affecting Federal Grant Assurance Obligations at Salinas Municipal Airport, Salinas, Monterey County, California

AGENCY: Federal Aviation Administration, DOT.

ACTION: Notice of request to release airport land.

SUMMARY: The Federal Aviation Administration (FAA) is considering a proposal and invites public comment to change a portion of the airport from aeronautical use to non-aeronautical use at Salinas Municipal Airport (SNS), Salinas, Monterey County, California. The proposal consists of one parcel containing 13.25 acres of airport land, located outside of the airfield, south of Airport Boulevard, between Mercer Way and Skyway Boulevard, and north of Mortensen Avenue.

DATES: Comments must be received on or before July 8, 2020.

ADDRESSES: Comments on the request may be mailed or delivered to the FAA at the following address: Ms. Laurie J. Suttmeier, Manager, San Francisco Airports District Office, Federal Aviation Administration, 1000 Marina Boulevard, Suite 220, Brisbane, California, 94005–1835. In addition, one copy of the comment submitted to the FAA must be mailed or delivered to Mr. Brett J. Godown, Airport Manager, 30 Mortensen Avenue, Salinas, California 93905.

SUPPLEMENTARY INFORMATION: The land was originally acquired from the federal government as surplus land, via quitclaim deed issued by the War Assets Administration on February 4, 1949. The land will be leased for non-aeronautical revenue generation. Such use of the land represents a compatible land use that will not interfere with the airport or its operation, thereby protecting the interests of civil aviation. The airport will be compensated for the fair market value of the use of the land.

In accordance with the Wendell H. Ford Aviation Investment and Reform Act for the 21st Century (AIR 21), Public Law 106–181 (Apr. 5, 2000; 114 Stat. 75), this notice must be published in the **Federal Register** 30 days before the DOT Secretary may waive any condition imposed on a federally obligated airport by surplus property conveyance deeds or grant agreements.

Issued in El Segundo, California, on May 27, 2020.

Brian Q. Armstrong,

Manager, Safety and Standards Branch, Airports Division, Western-Pacific Region.

[FR Doc. 2020–12129 Filed 6–5–20; 8:45 am]

BILLING CODE 4910–13–P

DEPARTMENT OF THE TREASURY

Community Development Financial Institutions Fund; Request for Information

ANNOUNCEMENT TYPE: Notice and request for information.

SUMMARY: The Community Development Financial Institutions Fund (CDFI Fund), Department of the Treasury, requests comments from the public to gain a better understanding of how Community Development Financial Institutions (CDFIs) treat equity investments in their organizations to help inform policy decisions regarding the CDFI Fund's management and oversight of its investment portfolio.

DATES: Written comments must be received on or before July 8, 2020 to be assured of consideration.

ADDRESSES: Submit your comments via email to Tanya McInnis, Certification, Compliance Monitoring and Evaluation (CCME) Program Manager, CDFI Fund, at *cdfihelp@cdfi.treas.gov.*

FOR FURTHER INFORMATION CONTACT: Tanya McInnis, CCME Program Manager, CDFI Fund, 1500 Pennsylvania Avenue NW, Washington, DC 20220 or email to *cdfihelp@cdfi.treas.gov.*

SUPPLEMENTARY INFORMATION: Through the Community Development Financial Institutions Program (CDFI Program) and Native American CDFI Assistance Program (NACA Program), the CDFI Fund provides Financial Assistance (FA) awards in variety of forms, including equity investments. The CDFI Fund is working to provide more context and clarity regarding policies and procedures related to equity investments it provides in two specific areas: Compliance remedies and cure periods for CDFIs noncompliant with the CDFI Fund's existing control restrictions and the adoption of an exit strategy for new equity investment awards.

Control Restrictions: By statute, the CDFI Fund may not own more than fifty percent (50%) of a CDFI's equity, nor may it otherwise control a CDFI. Periodically, CDFIs have taken actions with respect to equity investments in their organization that have resulted in the CDFI Fund owning more than fifty

percent (50%) of a CDFI's equity, or otherwise controlling a CDFI. The CDFI Fund is interested in learning from the industry their perspective on methods CDFIs may be afforded to cure noncompliance with this requirement. Options under consideration include requiring a Recipient to repurchase or redeem the CDFI Fund's equity investment to decrease CDFI Fund ownership to fifty percent (50%) or below; permitting a Recipient to issue more shares to dilute the CDFI Fund's equity investment percentage to the fifty percent (50%) threshold or below; or a combination thereof.

Equity Investment Exit Strategy: The CDFI Fund has an internal investment policy with language outlining a practice to conduct a yearly review of the existing investments in its portfolio and to provide recommendations to Senior Management of possible next steps, if any. The current policy does not provide specific plans of action or indicia for exiting equity investments.

I. General Questions on CDFI Equity and Related Policies

1. How does your CDFI use equity investments from the CDFI Fund and other organizations as part of your lending and or business model?

2. What are the risk/factors your organization takes into account when developing an equity strategy (*e.g.,* increasing or decreasing the amount of equity)? The CDFI Fund is trying to understand the impact/risks/benefits of mandating a CDFI repurchase or redeem CDFI Fund equity investments at a specific future date.

3. How does your organization determine the value of equity shares on its balance sheet?

4. What is your policy for redeeming or repurchasing equity from shareholders?

5. What is your preferred schedule for redeeming or repurchasing equity from shareholders? Is your schedule to return equity to shareholders based on percentages of shares or specific deadlines?

II. CDFI Fund Control Restriction

1. The Riegle Act requires that the CDFI Fund may not own more than fifty percent (50%) equity in a CDFI.

a. How frequently does your organization assess the percent of equity controlled by all shareholders, including the CDFI Fund?

b. Are there specific policies and procedures CDFIs should have in place for ensuring that the CDFI Fund does not own more than fifty percent (50%) of the organization's equity? If so, what are they?

2. A possible solution for reducing the percentage of CDFI Fund ownership to below fifty percent (50%) would be for an organization to issue more equity. What other ways can CDFIs reduce the percentage of CDFI Fund ownership?

3. What factors should the CDFI Fund consider if it were to require CDFIs to repurchase or redeem shares versus increasing the number of shares?

4. Are there any other factors the CDFI Fund should consider when evaluating compliance with the CDFI Fund Control restriction?

III. CDFI Fund Investment Exit Strategy

1. In general, what impact does repurchasing or redeeming CDFI Fund equity shares have on the mission and business model of a CDFI?

2. What are the primary considerations the CDFI Fund should consider when developing an equity strategy including an exit strategy?

3. What is a typical or reasonable exit strategy for equity investments in CDFIs? Is there a minimum amount of time the CDFI Fund should hold an equity investment in a CDFI?

4. Are there any other factors the CDFI Fund should consider when developing an Investment Exit Strategy?

Authority: 12 U.S.C. 4701 *et seq.;* 12 CFR 1805.

Jodie L. Harris,

Director, Community Development Financial Institutions Fund.

[FR Doc. 2020–12339 Filed 6–5–20; 8:45 am]

BILLING CODE 4810–70–P

DEPARTMENT OF THE TREASURY

Office of the Comptroller of the Currency

[Docket ID OCC–2020–0022]

Mutual Savings Association Advisory Committee

AGENCY: Office of the Comptroller of the Currency (OCC), Department of the Treasury.

ACTION: Notice of Federal Advisory Committee meeting.

SUMMARY: The OCC announces a meeting of the Mutual Savings Association Advisory Committee (MSAAC).

DATES: A public meeting of the MSAAC will be held on Monday, June 29, 2020, via webinar, beginning at 1:00 p.m. Eastern Daylight Time (EDT).

ADDRESSES: The OCC will hold the June 29, 2020 meeting of the MSAAC via webinar.

FOR FURTHER INFORMATION CONTACT: Michael R. Brickman, Deputy Comptroller for Thrift Supervision, (202) 649–5420, Office of the Comptroller of the Currency, Washington, DC 20219.

SUPPLEMENTARY INFORMATION: By this notice, the OCC is announcing that the MSAAC will convene a meeting on Monday, June 29, 2020, via webinar. The meeting is open to the public and will begin at 1:00 p.m. EDT. The purpose of the meeting is for the MSAAC to advise the OCC on regulatory or other changes the OCC may make to ensure the health and viability of mutual savings associations. The agenda includes a discussion of current topics of interest to the industry.

Members of the public may submit written statements to the MSAAC. The OCC must receive written statements no later than 5:00 p.m. EDT on Monday, June 22, 2020. Members of the public may submit written statements to *MSAAC@occ.treas.gov.*

Members of the public who plan to attend the meeting via webinar should contact the OCC by 5:00 p.m. EDT on Monday, June 22, 2020, to inform the OCC of their desire to attend the meeting and to obtain information about participating in the meeting. Members of the public may contact the OCC via email at *MSAAC@OCC.treas.gov* or by telephone at (202) 649–5420. Members of the public who are hearing impaired should call (202) 649–5597 (TTY) by 5:00 p.m. EDT on Monday, June 22, 2020, to arrange auxiliary aids for this meeting.

Attendees should provide their full name, email address, and organization, if any.

Brian P. Brooks,

Acting Comptroller of the Currency.

[FR Doc. 2020–12347 Filed 6–5–20; 8:45 am]

BILLING CODE 4810–33–P

DEPARTMENT OF THE TREASURY

Internal Revenue Service

Open Meeting of the Taxpayer Advocacy Panel Taxpayer Communications Project Committee

AGENCY: Internal Revenue Service (IRS), Treasury.

ACTION: Notice of meeting.

SUMMARY: An open meeting of the Taxpayer Advocacy Panel's Taxpayer Communications Project Committee will be conducted. The Taxpayer Advocacy Panel is soliciting public comments, ideas, and suggestions on improving

customer service at the Internal Revenue Service.

DATES: The meeting will be held Tuesday, July 14, 2020.

FOR FURTHER INFORMATION CONTACT: Cedric Jeans at 1–888–912–1227 or 901–707–3935.

SUPPLEMENTARY INFORMATION: Notice is hereby given pursuant to Section 10(a)(2) of the Federal Advisory Committee Act, 5 U.S.C. App. (1988) that a meeting of the Taxpayer Advocacy Panel Taxpayer Communications Project Committee will be held Tuesday, July 14, 2020, at 12:00 p.m. Eastern Time. The public is invited to make oral comments or submit written statements for consideration. Due to limited time and structure of meeting, notification of intent to participate must be made with Cedric Jeans. For more information please contact Cedric Jeans at 1–888–912–1227 or 901–707–3935, or write TAP Office, 5333 Getwell Road, Memphis, TN 38118 or contact us at the website: *http://www.improveirs.org.* The agenda will include various IRS issues.

Dated: June 2, 2020.

Kevin Brown,

Acting Director, Taxpayer Advocacy Panel.

[FR Doc. 2020–12307 Filed 6–5–20; 8:45 am]

BILLING CODE 4830–01–P

DEPARTMENT OF THE TREASURY

Internal Revenue Service

Open Meeting of the Taxpayer Advocacy Panel's Toll-Free Phone Line Project Committee

AGENCY: Internal Revenue Service (IRS) Treasury.

ACTION: Notice of meeting.

SUMMARY: An open meeting of the Taxpayer Advocacy Panel's Toll-Free Phone Line Project Committee will be conducted. The Taxpayer Advocacy Panel is soliciting public comments, ideas, and suggestions on improving customer service at the Internal Revenue Service.

DATES: The meeting will be held Wednesday, July 8, 2020.

FOR FURTHER INFORMATION CONTACT: Rosalind Matherne at 1–888–912–1227 or 202–317–4115.

SUPPLEMENTARY INFORMATION: Notice is hereby given pursuant to Section 10(a)(2) of the Federal Advisory Committee Act, 5 U.S.C. App. (1988) that an open meeting of the Taxpayer Advocacy Panel Toll-Free Phone Line Project Committee will be held Wednesday, July 8, 2020 at 11:00 a.m. Eastern Time. The public is invited to make oral comments or submit written statements for consideration. Due to limited time and structure of meeting, notification of intent to participate must be made with Rosalind Matherne. For more information please contact Rosalind Matherne at 1–888–912–1227 or 202–317–4115, or write TAP Office, 1111 Constitution Ave. NW, Room 1509, Washington, DC 20224 or contact us at the website: *http://www.improveirs.org.* The agenda will include various IRS issues.

Dated: June 2, 2020.

Kevin Brown,

Acting Director, Taxpayer Advocacy Panel.

[FR Doc. 2020–12301 Filed 6–5–20; 8:45 am]

BILLING CODE 4830–01–P

DEPARTMENT OF THE TREASURY

Internal Revenue Service

Open Meeting of the Taxpayer Advocacy Panel Taxpayer Assistance Center Improvements Project Committee

AGENCY: Internal Revenue Service (IRS) Treasury.

ACTION: Notice of meeting.

SUMMARY: An open meeting of the Taxpayer Advocacy Panel's Taxpayer Assistance Center Project Committee will be conducted. The Taxpayer Advocacy Panel is soliciting public comments, ideas, and suggestions on improving customer service at the Internal Revenue Service.

DATES: The meeting will be held Tuesday, July 14, 2020.

FOR FURTHER INFORMATION CONTACT: Matthew O'Sullivan at 1–888–912–1227 or (510) 907–5274.

SUPPLEMENTARY INFORMATION: Notice is hereby given pursuant to Section 10(a)(2) of the Federal Advisory Committee Act, 5 U.S.C. App. (1988) that an open meeting of the Taxpayer Advocacy Panel's Taxpayer Assistance Center Project Committee will be held Tuesday, July 14, 2020, at 1:00 p.m. Eastern Time. The public is invited to make oral comments or submit written statements for consideration. Due to limited time and structure of meeting, notification of intent to participate must be made with Matthew O'Sullivan. For more information please contact Matthew O'Sullivan at 1–888–912–1227 or (510) 907–5274, or write TAP Office, 1301 Clay Street, Oakland, CA 94612–5217 or contact us at the website: *http://www.improveirs.org.* The agenda will include various IRS issues.

Dated: June 2, 2020.

Kevin Brown,

Acting Director, Taxpayer Advocacy Panel.

[FR Doc. 2020–12302 Filed 6–5–20; 8:45 am]

BILLING CODE 4830–01–P

DEPARTMENT OF THE TREASURY

Internal Revenue Service

Open Meeting of the Taxpayer Advocacy Panel Joint Committee

AGENCY: Internal Revenue Service (IRS), Treasury.

ACTION: Notice of meeting.

SUMMARY: An open meeting of the Taxpayer Advocacy Panel Joint Committee will be conducted. The Taxpayer Advocacy Panel is soliciting public comments, ideas, and suggestions on improving customer service at the Internal Revenue Service.

DATES: The meeting will be held Thursday, July 23, 2020.

FOR FURTHER INFORMATION CONTACT: Gilbert Martinez at 1–888–912–1227 or (737) 800–4060.

SUPPLEMENTARY INFORMATION: Notice is hereby given pursuant to Section 10(a)(2) of the Federal Advisory Committee Act, 5 U.S.C. App. (1988) that an open meeting of the Taxpayer Advocacy Panel Joint Committee will be held Thursday, July 23, 2020, at 1:30 p.m. Eastern Time via teleconference. The public is invited to make oral comments or submit written statements for consideration. For more information please contact Gilbert Martinez at 1–888–912–1227 or (737–800–4060), or write TAP Office 3651 S. IH–35, STOP 1005 AUSC, Austin, TX 78741, or post comments to the website: *http://www.improveirs.org.*

The agenda will include various committee issues for submission to the IRS and other TAP related topics. Public input is welcomed.

Dated: June 2, 2020.

Kevin Brown,

Acting Director, Taxpayer Advocacy Panel.

[FR Doc. 2020–12297 Filed 6–5–20; 8:45 am]

BILLING CODE 4830–01–P

DEPARTMENT OF THE TREASURY

Internal Revenue Service

Open Meeting of the Taxpayer Advocacy Panel's Tax Forms and Publications Project Committee

AGENCY: Internal Revenue Service (IRS), Treasury.

ACTION: Notice of meeting.

SUMMARY: An open meeting of the Taxpayer Advocacy Panel's Tax Forms and Publications Project Committee will be conducted. The Taxpayer Advocacy Panel is soliciting public comments, ideas, and suggestions on improving customer service at the Internal Revenue Service.

DATES: The meeting will be held Wednesday, July 8, 2020.

FOR FURTHER INFORMATION CONTACT: Fred Smith at 1–888–912–1227 or (202) 317–3087.

SUPPLEMENTARY INFORMATION: Notice is hereby given pursuant to Section 10(a)(2) of the Federal Advisory Committee Act, 5 U.S.C. App. (1988) that a meeting of the Taxpayer Advocacy Panel's Tax Forms and Publications Project Committee will be held Wednesday, July 8, 2020 at 12:00 p.m. Eastern Time. The public is invited to make oral comments or submit written statements for consideration. Due to limited time and structure of meeting, notification of intent to participate must be made with Fred Smith. For more information please contact Fred Smith at 1–888–912–1227 or (202) 317–3087, or write TAP Office, 1111 Constitution Ave. NW, Room 1509, Washington, DC 20224 or contact us at the website: *http://www.improveirs.org.*

Dated: June 2, 2020.

Kevin Brown,

Acting Director, Taxpayer Advocacy Panel.

[FR Doc. 2020–12299 Filed 6–5–20; 8:45 am]

BILLING CODE 4830–01–P

DEPARTMENT OF THE TREASURY

Internal Revenue Service

Open Meeting of the Taxpayer Advocacy Panel's Notices and Correspondence Project Committee

AGENCY: Internal Revenue Service (IRS) Treasury.

ACTION: Notice of meeting.

SUMMARY: An open meeting of the Taxpayer Advocacy Panel's Notices and Correspondence Project Committee will be conducted. The Taxpayer Advocacy Panel is soliciting public comments, ideas, and suggestions on improving customer service at the Internal Revenue Service.

DATES: The meeting will be held Wednesday, July 8, 2020.

FOR FURTHER INFORMATION CONTACT: Robert Rosalia at 1–888–912–1227 or (718) 834–2203.

SUPPLEMENTARY INFORMATION: Notice is hereby given pursuant to Section 10(a)(2) of the Federal Advisory Committee Act, 5 U.S.C. App. (1988) that an open meeting of the Taxpayer Advocacy Panel's Notices and Correspondence Project Committee will be held Wednesday, July 8, 2020, at 1:00 p.m. Eastern Time. The public is invited to make oral comments or submit written statements for consideration. Due to limited time and structure of meeting, notification of intent to participate must be made with Robert Rosalia. For more information please contact Robert Rosalia at 1–888–912–1227 or (718) 834–2203, or write TAP Office, 2 Metrotech Center, 100 Myrtle Avenue, Brooklyn, NY 11201 or contact us at the website: *http://www.improveirs.org.* The agenda will include various IRS issues.

Dated: June 2, 2020.

Kevin Brown,

Acting Director, Taxpayer Advocacy Panel.

[FR Doc. 2020–12300 Filed 6–5–20; 8:45 am]

BILLING CODE 4830–01–P

DEPARTMENT OF THE TREASURY

Internal Revenue Service

Open Meeting of the Taxpayer Advocacy Panel's Special Projects Committee

AGENCY: Internal Revenue Service (IRS), Treasury.

ACTION: Notice of meeting.

SUMMARY: An open meeting of the Taxpayer Advocacy Panel's Special Projects Committee will be conducted. The Taxpayer Advocacy Panel is soliciting public comments, ideas, and suggestions on improving customer service at the Internal Revenue Service.

DATES: The meeting will be held Thursday, July 9, 2020.

FOR FURTHER INFORMATION CONTACT: Antoinette Ross at 1–888–912–1227 or 202–317–4110.

SUPPLEMENTARY INFORMATION: Notice is hereby given pursuant to Section 10(a)(2) of the Federal Advisory Committee Act, 5 U.S.C. App. (1988) that an open meeting of the Taxpayer Advocacy Panel's Special Projects Committee will be held Thursday, July 9, 2020, at 11:00 a.m. Eastern Time. The public is invited to make oral comments or submit written statements for consideration. Due to limited time and structure of meeting, notification of intent to participate must be made with Antoinette Ross. For more information please contact Antoinette Ross at 1–888–912–1227 or 202–317–4110, or write TAP Office, 1111 Constitution Ave. NW, Room 1509, Washington, DC 20224 or contact us at the website: *http://www.improveirs.org.* The agenda will include various IRS issues.

Dated: June 2, 2020.

Kevin Brown,

Acting Director, Taxpayer Advocacy Panel.

[FR Doc. 2020–12298 Filed 6–5–20; 8:45 am]

BILLING CODE 4830–01–P

DEPARTMENT OF THE TREASURY

Survey of Foreign Ownership of U.S. Securities as of June 30, 2020

AGENCY: Departmental Offices, Department of the Treasury.

ACTION: Notice of reporting requirements.

SUMMARY: By this notice, the Department of the Treasury is informing the public that it is conducting a mandatory survey of foreign ownership of U.S. securities as of June 30, 2020. This mandatory survey is conducted under the authority of the International Investment and Trade in Services Survey Act. This Notice constitutes legal notification to all United States persons (defined below) who meet the reporting requirements set forth in this Notice that they must respond to, and comply with, this survey. Additional copies of the reporting forms SHLA (2020) and instructions may be printed from the internet at: *http://www.treasury.gov/resource-center/data-chart-center/tic/Pages/forms-sh.aspx.*

Definition: A U.S. person is any individual, branch, partnership, associated group, association, estate, trust, corporation, or other organization (whether or not organized under the laws of any State), and any government (including a foreign government, the United States Government, a State or local government, and any agency, corporation, financial institution, or other entity or instrumentality thereof, including a government-sponsored agency), who resides in the United States or is subject to the jurisdiction of the United States.

Who Must Report: The panel for this survey is based primarily on the level of foreign resident holdings of U.S. securities reported on the June 2019 benchmark survey of foreign resident holdings of U.S. securities, and on the Aggregate Holdings of Long-Term Securities by U.S. and Foreign Residents (TIC SLT) report as of December 2019, and will consist mostly of the largest reporters. Entities required to report will be contacted individually by the Federal Reserve Bank of New York. Entities not contacted by the Federal Reserve Bank

of New York have no reporting responsibilities.

What to Report: This report will collect information on foreign resident holdings of U.S. securities, including equities, short-term debt securities (including selected money market instruments), and long-term debt securities.

How to Report: Copies of the survey forms and instructions, which contain complete information on reporting procedures and definitions, may be obtained at the website address given above in the Summary, or by contacting the survey staff of the Federal Reserve Bank of New York at (212) 720–6300 or (646) 720–6300, email: *SHLA.help@ny.frb.org.* The mailing address is: Federal Reserve Bank of New York, Data and Statistics Function, 6th Floor, 33 Liberty Street, New York, NY 10045–0001. Inquiries can also be made to the Federal Reserve Board of Governors, at (202) 452–3476, or to Dwight Wolkow, at (202) 923–0518, or by email: *comments2TIC@do.treas.gov*.

When to Report: Data should be submitted to the Federal Reserve Bank of New York, acting as fiscal agent for the Department of the Treasury, by August 31, 2020.

Paperwork Reduction Act Notice: This data collection has been approved by the Office of Management and Budget (OMB) in accordance with the Paperwork Reduction Act and assigned control number 1505–0123. An agency may not conduct or sponsor, and a person is not required to respond to, a collection of information unless it displays a valid control number assigned by OMB. The estimated average annual burden associated with this collection of information is 486 hours per report for the largest custodians of securities, and 110 hours per report for the largest issuers of securities that have data to report and are not custodians. Comments concerning the accuracy of this burden estimate and suggestions for reducing this burden should be directed to the Department of the Treasury, Office of International Affairs, Attention Administrator, International Portfolio Investment Data Reporting Systems, Room 1050, Washington, DC 20220, and to OMB, Attention Desk Officer for the Department of the Treasury, Office of Information and Regulatory Affairs, Washington, DC 20503.

Dwight D. Wolkow,

Administrator, International Portfolio Investment Data Reporting Systems.

[FR Doc. 2020–12284 Filed 6–5–20; 8:45 am]

BILLING CODE 4810–25–P

Reader Aids

Federal Register

Vol. 85, No. 110

Monday, June 8, 2020

CUSTOMER SERVICE AND INFORMATION

Federal Register/Code of Federal Regulations	
General Information, indexes and other finding aids	**202–741–6000**
Laws	**741–6000**
Presidential Documents	
Executive orders and proclamations	**741–6000**
The United States Government Manual	**741–6000**
Other Services	
Electronic and on-line services (voice)	**741–6020**
Privacy Act Compilation	**741–6050**

ELECTRONIC RESEARCH

World Wide Web

Full text of the daily Federal Register, CFR and other publications is located at: **www.govinfo.gov.**

Federal Register information and research tools, including Public Inspection List and electronic text are located at: **www.federalregister.gov.**

E-mail

FEDREGTOC (Daily Federal Register Table of Contents Electronic Mailing List) is an open e-mail service that provides subscribers with a digital form of the Federal Register Table of Contents. The digital form of the Federal Register Table of Contents includes HTML and PDF links to the full text of each document.

To join or leave, go to **https://public.govdelivery.com/accounts/USGPOOFR/subscriber/new**, enter your email address, then follow the instructions to join, leave, or manage your subscription.

PENS (Public Law Electronic Notification Service) is an e-mail service that notifies subscribers of recently enacted laws.

To subscribe, go to **http://listserv.gsa.gov/archives/publaws-l.html and select** *Join or leave the list (or change settings);* then follow the instructions.

FEDREGTOC and **PENS** are mailing lists only. We cannot respond to specific inquiries.

Reference questions. Send questions and comments about the Federal Register system to: **fedreg.info@nara.gov**

The Federal Register staff cannot interpret specific documents or regulations.

FEDERAL REGISTER PAGES AND DATE, JUNE

32977–33526 1
33527–34084 2
34085–34352 3
34353–34492 4
34493–34956 5
34957–35164 8

CFR PARTS AFFECTED DURING JUNE

At the end of each month the Office of the Federal Register publishes separately a List of CFR Sections Affected (LSA), which lists parts and sections affected by documents published since the revision date of each title.

2 CFR
910 32977

3 CFR
Proclamations:
10043 34353
10044 34941
10045 34943
10046 34945
10047 34947
10048 34949
Executive Orders:
13925 34079
13926 34951
Administrative Orders:
Memorandums:
Memorandum of June 2, 2020 34955

7 CFR
1 34085
Proposed Rules:
205 35011
301 34537

9 CFR
Proposed Rules:
310 33031
352 33034

10 CFR
9 33527
50 34087
35 33527
Proposed Rules:
9 33581
35 33581
72 33582
170 34370
431 ..... 33036, 34111, 34541

12 CFR
3 32980
6 32980
7 33530
25 34734
30 32991
160 33530
195 34734
208 ..... 32980, 32991
217 32980
324 32980
364 32991
741 32991
1005 34870
Proposed Rules:
745 34545

13 CFR
120 ..... 33004, 33010

14 CFR
29 34493
39 ..... 34088, 34090, 34957, 34959
71 ..... 33536, 34962, 34964
Proposed Rules:
39 ..... 33043, 33046, 33583, 34118, 34121, 34136, 34139, 34141, 34371, 34375, 35015, 35016, 35018, 35021, 35024
71 ..... 33587, 33589, 33590, 34144, 34146, 34148, 35026

15 CFR
744 ..... 34495, 34503
774 34306

16 CFR
1253 33015
Proposed Rules:
317 34548

17 CFR
229 33290
230 33290
232 33290
239 33290
240 ..... 33020, 33290
243 33290
249 33290
270 33290
274 33290

19 CFR
Proposed Rules:
24 ..... 34549, 34836
111 ..... 34549, 34836

21 CFR
112 34508
573 33538
1308 34967

26 CFR
Proposed Rules:
1 34050

27 CFR
9 34095
18 33539
19 33539
24 33539
25 33539
26 33539
27 33539
28 33539
30 33539
70 33539

29 CFR
541 34969
778 34970
Proposed Rules:
1614 33049

30 CFR
550 34912

31 CFR
569 34510

32 CFR
104 34518
199 34101

33 CFR
100 ....33543, 33547, 34993, 34994
117 33550
165 ....33553, 33561, 33566, 33568, 33570, 34104, 34519, 34520, 34999, 35001
207 35003
326 35003
Proposed Rules:
100 33592
165 35028

34 CFR
361 33021
Proposed Rules:
Ch. III 34554

36 CFR
Proposed Rules:
251 34378

37 CFR
Proposed Rules:
201 34150

38 CFR
71 34522

40 CFR
52 ....33021, 33023, 33571, 34106, 34108, 34357, 34524
63 34326
70 33023
174 35006
180 34359
271 33026
282 34361
Proposed Rules:
52 ....33049, 33052, 34379, 34381, 34559, 35031, 35033, 35035, 35037, 35041, 35046
80 35048
81 34381
180 33059
282 34395

42 CFR
417 33796
422 33796
423 33796

43 CFR
Proposed Rules:
5000 35049
5400 35049
5410 35049
5420 35049
5430 35049
5440 35049
5450 35049
5460 35049
5470 35049
5500 35049

44 CFR
67 35008

45 CFR
Proposed Rules:
153 33595

47 CFR
0 34525
1 33578
2 33578
54 ....33578, 34525

48 CFR
201 34527
206 34528
208 34530
210 34530
212 34530
215 ....34530, 34532
218 34527
219 34528
225 34533
234 34530
249 34535
252 ....34535, 34536
Proposed Rules:
2 34561
9 34561
15 34561
19 ....34155, 34561
42 34155
52 ....34155, 34561
204 34569
212 34569
239 34576
252 ....34569, 34576

49 CFR
29 33494
385 33396
395 33396
Proposed Rules:
572 33617

50 CFR
648 ....33027, 33579
Proposed Rules:
17 33060
21 34578
218 33914

LIST OF PUBLIC LAWS

Note: No public bills which have become law were received by the Office of the Federal Register for inclusion in today's **List of Public Laws**.

Last List June 3, 2020

Public Laws Electronic Notification Service (PENS)

PENS is a free email notification service of newly enacted public laws. To subscribe, go to *https://listserv.gsa.gov/cgi-bin/wa.exe?SUBED1=PUBLAWS-L&A=1*

Note: This service is strictly for email notification of new laws. The text of laws is not available through this service. **PENS** cannot respond to specific inquiries sent to this address.